January 1978 $2.00

73 AMATEUR RADIO

PLUS 36 More Exciting Feature Articles (see page 5)

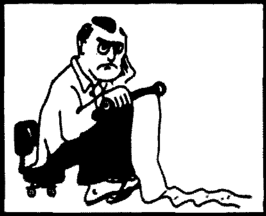

...de W2NSD/1

NEVER SAY DIE

EDITORIAL BY WAYNE GREEN

ARRL BRAGS AGAIN

The League recently sent a newsletter to God-knows-who bragging about the ARRL defeat of the 220 MHz CB proposal. There are many areas where the ARRL can rightfully claim credit, so it ill befits them to step in and bray about things where they were minor participants, at best.

One of the key moves which blocked the attempted grab of 220 by the CB industry was the stiff opposition to it by both Canada and Mexico. I note that the ARRL gives no credit to the ham who spearheaded the responses from these countries.

Another important blocking move was the proposed Communicator class license which was filed with the FCC as an alternate to the CB use of 220. The ARRL makes no mention of this or the ham who filed it.

Probably the most important factor in ending the 220 MHz CB threat was the serious wounding of the CB industry by its own greed. This helped shut off the free-flowing funds to the EIA, thus reducing the lobbying pressures on the FCC and the OTP. This was largely a battle of money and political influence, and much less one of practical right and wrong.

Another factor was the removal of Prose Walker from heading the amateur and CB division of the FCC, and here the ARRL has nothing to brag about. They refused to speak up in any way, no matter how outrageous Walker's dictatorial rules became. They even refused to participate in the first ham hearing before the FCC which was set up to protest the repeater rules specifically and the strong move toward over-regulation in general. One of the important points made during this hearing was the amateur opposition to CB use of 220 MHz . . . and the need for a Communicator license . . . which the ARRL at first opposed vigorously.

No, none of these events or the people who made them happen are given any credit . . . only the ARRL and its 3/4-pound official filing.

GREATEST THREAT?

The ARRL newsletter, written by Baldwin, shows where ARRL priorities are when he states that "one of the greatest threats to amateur radio today comes from the use of ham gear by unlicensed people." Baldwin is not even worried about the ITU and WARC — only about a small handful of bootleggers, numbering in the dozens.

If the facts were to be known, I wouldn't be surprised if there isn't a lot more pirate operation by licensed hams than by CBers. The chaps getting caught and arrested for profane language on the ham bands are licensed amateurs . . . even Extra class amateurs. Hams are even being caught lousing up the CB channels with profanity . . . Extra class hams.

There is nothing happening in the way of bootlegging on our ham bands by CBers that we can't handle all by ourselves. Sure, we need to get busy and come up with some direction-finding circuits and equipment . . . and we need to learn how to use them. We need to swap ideas on how to convince bootleggers that they really should take the trouble to get a ham license. I think we're smart enough and have enough interest in our hobby to be able to do that and prove to the FCC and even to the ARRL that we are self-policing.

ARRL CREDITS

The League undoubtedly helped in many ways to defeat the CB on 220 MHz proposal, but how much nicer it would have been if they had gone out of their way to give credit to some of the hams who spent a lot of time and effort fighting that fight . . . and winning it . . . rather than try to put everyone else down and grab all the credit for the League. The Red Cross has developed a reputation for this, and I think it has hurt them a lot. Let's tell the ARRL directors to cut out this rot. It is a mark of insecurity and inferiority to brag and exaggerate like that.

ARRL DELAYS 21103

One of the most basic philosophical gaps between me and League supporters has to do with motivation. The League almost invariably wants to use punishment and more laws as a way to force people to do what they think best. I believe that responsibility and reason will do better in the long run. I have psychology on my side.

The League wanted hams to go for higher classes of license, so they pushed the FCC into "incentive licensing." This beaut took away about half of the phone bands from General class hams and forced them to get an Advanced class to get the bands back. Punishment. This was undoubtedly the worst debacle in the history of amateur radio. Amateurs dropped out or got so mad they stopped buying ham gear for almost ten years . . . and the growth of the hobby stopped cold for the same period.

Old-timers will remember firms such as Hallicrafters, National, Johnson, B&W, etc. These were the biggies of the 50s. They're all gone now as far as amateur radio is concerned, driven out or killed by incentive licensing.

The deregulation of two meters looks to me to be a good thing. Sure, if we don't act responsibly, we can make a mess of it. We can louse up satellite signals, experimental repeaters, weak signal experimenters, etc. I say it is time amateurs were treated like adults instead of children. We showed we could handle ourselves when we had repeater problems . . . we solved them . . . and we were all the better for it. The ARRL is saying to the FCC that amateurs are unable to cope with responsibility and must have laws to force them to do what the League thinks best. I disagree, and think the FCC should continue with its deregulation.

TEN COMES BACK

With the return of some sunspots to our lives, we will be seeing more and more skip on ten meters.

And with the ban on selling 23-channel CB sets after January first (unless there is an extension by the FCC), we may see a lot of instantly-converted CB sets appearing which have been moved up 2 MHz and are now 10m rigs. The prices should be right and, as long as we insist on talking only to amateurs, we'll have a benefit.

Ten meters can use all the activity we can muster, so these low-cost AM transceivers are a good deal. With them converted to exactly 2 MHz above the CB band, the low-powered signals will be starting at 28.965 MHz and going up to around 29.255. This is well above the sideband part of the band and the DX portion, so there should be little interference from the

Continued on page 161

LETTERS

BEATING THE DRUM FOR 10

I read W2NSD/1's editorial in *73* (Oct. 1977), in which he said he had served aboard the submarine *USS Drum*. I want to be sure that he knows that we have the *Drum* here in Alabama. It, along with the battleship *USS Alabama*, is visited by many tourists each day. The ships lie in Mobile Bay, just east of Mobile. I felt that he knew this, but he did not indicate it in his editorial.

I am a new ham of just 14 months, and I enjoy your magazines very much. I especially enjoy the technical amateur radio articles, the editorial, and the letters to the editor. I also enjoy the ham-related human interest stories.

I am in favor of 10 meter AM operation on 28.965-29.255 as stated in the letter from W8LSS. I have acquired an old Johnson Messenger Two and am waiting to see where everyone is going on 10 AM before buying $110 worth of crystals. I will not, however, install crystals which will interfere with frequencies now in use by SSB, as I am a 10-10 net member and intend to stay on 10 meters SSB.

S. K. Hillman WA4TYH
E. Brewton AL

Yes, the Drum *crew holds a reunion every year on the old boat. It's fun to go aboard and remember the interesting times we had on her . . . over 30 years ago. The two MHz higher plan for converting CB to the ham 10m band seems to be winning out, so let's modestly call that the "73 Plan." Standard Communications is now making a conversion of their great Horizon 29 for this band . . . as is Bristol Electronics. Who knows, we may end up with tens of thousands of 10m mobile hams. I would suggest that we plan on channel 1 as a calling channel . . . 28.965 MHz. This system is good because it puts the low-powered CB rigs above the hurly-burly of 10m DXing in the 28.5 to 28.9 MHz part of the band . . . and still it avoids the satellite part of the band, too, up around 29.4. — Wayne.*

ANOTHER ORGANIZATION?

For over a year now, I have read editorials by you criticizing the ARRL, the FCC, and probably others I cannot recall. I have also read, with a great deal of interest, your comments on various aspects of amateur radio regulation.

Sometimes I wonder if anyone will find a way to solve some of the problems. Perhaps you could find a way to exercise your leadership even more. To a relative newcomer to amateur radio, such as myself, the uproar seems both confusing and useless — a lot of discussion but no real solutions. Many of your ideas seem valid, but what good are ideas if they are not implemented?

I am a member of the ARRL and am active in teaching Novice classes. To be honest, what alternative is there? No other large organization represents hams, and when the ARRL tries to do something, they are whipped down. (Witness Dick Cowan's complaint to the FCC regarding the "code of ethics," and the communications attorneys service proposed lawsuit.) It seems almost impossible to get anything done. You say that the ARRL is only a publisher (a competitor, no less!), but aren't they attempting to become more? Is there something wrong with *trying* to represent amateurs? (Possibly unsuccessfully?)

Perhaps you should start another organization.

That's OK, and many, including myself, would probably join if it would help.

Perhaps you could organize a lobby to get some teeth into the law and the enforcement machinery (nonexistent except to punish amateurs; apparently everyone else does what he wants, or so it seems).

Personally, I just wish someone would do something. If I had time and money, I would try to do something myself. It is extremely frustrating to work for that hard-to-earn ticket in order to be able to use a band, and then find illegal CBers (or whatever they're called) using that band with impunity — and manufacturers selling them the gear with which to do it.

For my part, I do not understand why the manufacturers have to be under a code of ethics. If I made or sold ham equipment and needed to make a buck more, I don't think I would feel right about selling to unlicensed operators. If the business is that marginal, then they should get out of it or, better yet, diversify into the CB radio business and try to persuade CBers to get ham tickets. Perhaps I just don't understand greed.

The entire matter is upsetting and leaves one with a feeling of hopelessness. I am probably missing some points because I am only a newcomer (licensed about 1½ years) to amateur radio, but perhaps if I express my feelings, my naiveté will be overlooked and someone will find a way to *do something!*

Jim Clark N5RO
Houston TX

Oddly enough, Jim, the more you know about the situation, the more upset you are. My own problems are much the same as yours . . . a lack of time and money. I did, a few years ago, organize a lobby for amateur radio, but I found that I was unable to outspend the League to keep this going. The League appears to be willing to spend any amount necessary to put down any possible second group that might get started . . . they've got over $1 million available . . . just in case you ever wondered for a minute why there is one and only one national ham organization. — Wayne.

"WHY NOT?"

A couple of comments on the practice tapes.

I picked up a 14 wpm tape a few months ago when I decided to get my license back and equip myself to use the autopatches. It's been a real help in recovering my rusty reflexes, though I still confuse B with 6, especially when my attention wanders or I start copying a couple of letters behind.

At any rate, at about the time I got so I could copy the tape pretty near solid (except for those pesky Bs and 6s), I took another pass through the study material and the rules as a last review before going in for the Advanced. On the spur of the moment, I decided to take a look at the Extra material as well. Hmmm. Not really all that rough. Hmmm. So the next time I was in Tufts Radio, I got a 21 wpm cassette and started it just to see how hard it was. I was very surprised (make that astonished) to find that I

Continued on page 175

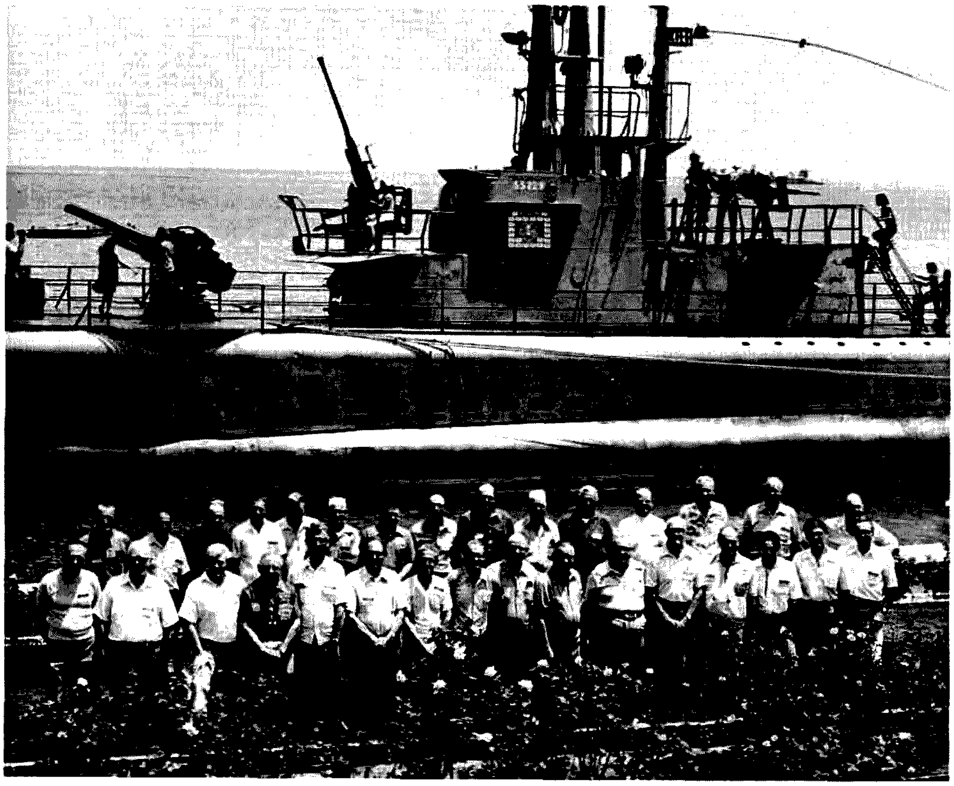

The crew of the USS Drum *at their 1977 reunion. W2NSD/1 is at far right, second row. (Photo by Dave Hamby.)*

Corrections

Regarding "ASCII To Baudot Converter," *73 Magazine*, February, 1976: Tables 1 through 3 are listings of the PROM programs for the U4, U5, and U6 PROMs (respectively) used in the ABC-1 article. 82S23 PROMs may be used instead of the specified 8223. However, the 82S23 may be programmed with a slightly higher programming voltage. See the manufacturers' data sheets.

EDI no longer supplies PCBs or programmed PROMs for this unit, and no other source for boards is known at this time. Vectorboards and wire-wrap techniques provide a good alternate method of construction for the ABC-1.

Cole Ellsworth W6OXP
Garden Grove CA

ADDRESS (ASCII INPUT)				DECIMAL ADDRESS		OUTPUT DATA (BAUDOT)								USER'S CHARACTER
A8	A7	A6	A5 A4 A3 A2 A1	& ASCII CHR		B1	B2	B3	B4	B5	B6	B7	B8	
			0 0 0 0 0	000	@									BLANK
			0 0 0 0 1	001	A	1	1	0	0	0				A
			0 0 0 1 0	002	B	1	0	0	1	1				B
			0 0 0 1 1	003	C	0	1	1	1	0				C
			0 0 1 0 0	004	D	1	0	0	1	0				D
			0 0 1 0 1	005	E	1	0	0	0	0				E
			0 0 1 1 0	006	F	1	0	1	1	0				F
			0 0 1 1 1	007	G	0	1	0	1	1				G
			0 1 0 0 0	008	H	0	0	1	0	1				H
			0 1 0 0 1	009	I	0	1	1	0	0				I
			0 1 0 1 0	010	J	1	1	0	1	0				J
			0 1 0 1 1	011	K	1	1	1	1	0				K
			0 1 1 0 0	012	L	0	1	0	0	1				L
			0 1 1 0 1	013	M	0	0	1	1	1				M
			0 1 1 1 0	014	N	0	0	1	1	0				N
			0 1 1 1 1	015	O	0	0	0	1	1				O
			1 0 0 0 0	016	P	0	1	1	0	1				P
			1 0 0 0 1	017	Q	1	1	1	0	1				Q
			1 0 0 1 0	018	R	0	1	0	1	0				R
			1 0 0 1 1	019	S	1	0	1	0	0				S
			1 0 1 0 0	020	T	0	0	0	0	1				T
			1 0 1 0 1	021	U	1	1	1	0	0				U
			1 0 1 1 0	022	V	0	1	1	1	1				V
			1 0 1 1 1	023	W	1	1	0	0	1				W
			1 1 0 0 0	024	X	1	0	1	1	1				X
			1 1 0 0 1	025	Y	1	0	1	0	1				Y
			1 1 0 1 0	026	Z	1	0	0	0	1				Z
			1 1 0 1 1	027	[									BLANK
			1 1 1 0 0	028	\									BLANK
			1 1 1 0 1	029	]									BLANK
			1 1 1 1 0	030	^	1	1	0	1	1				FIGS
			1 1 1 1 1	031	DEL	1	1	1	1	1				LTRS

Table 1.

ADDRESS (ASCII INPUT)				DECIMAL ADDRESS		OUTPUT DATA (BAUDOT)								USER'S CHARACTER
A8	A7	A6	A5 A4 A3 A2 A1	& ASCII CHR		B1	B2	B3	B4	B5	B6	B7	B8	
			0 0 0 0 0	000	NULL	0	0	0	0	0	0	1		BLANK
			0 0 0 0 1	001	SOH							1		BLANK
			0 0 0 1 0	002	STX							1		BLANK
			0 0 0 1 1	003	ETX							1		BLANK
			0 0 1 0 0	004	EOT							1		BLANK
			0 0 1 0 1	005	ENQ							1		BLANK
			0 0 1 1 0	006	ACK							1		BLANK
			0 0 1 1 1	007	BELL	1	0	1	0	0	1	0		BELL
			0 1 0 0 0	008	BS							1		BLANK
			0 1 0 0 1	009	HT							1		BLANK
			0 1 0 1 0	010	LF	0	1	0	0	0	0	1		LINE FD
			0 1 0 1 1	011	VT							1		BLANK
			0 1 1 0 0	012	FF							1		BLANK
			0 1 1 0 1	013	CR	0	0	0	1	0	0	1		CR RTN
			0 1 1 1 0	014	SO							1		BLANK
			0 1 1 1 1	015	SI							1		BLANK
			1 0 0 0 0	016	DLE							1		BLANK
			1 0 0 0 1	017	DC1							1		BLANK
			1 0 0 1 0	018	DC2							1		BLANK
			1 0 0 1 1	019	DC3							1		BLANK
			1 0 1 0 0	020	DC4							1		BLANK
			1 0 1 0 1	021	NAK							1		BLANK
			1 0 1 1 0	022	SYN							1		BLANK
			1 0 1 1 1	023	ETB							1		BLANK
			1 1 0 0 0	024	CAN							1		BLANK
			1 1 0 0 1	025	EM							1		BLANK
			1 1 0 1 0	026	SUB							1		BLANK
			1 1 0 1 1	027	ESC							1		BLANK
			1 1 1 0 0	028	FS							1		BLANK
			1 1 1 0 1	029	GS							1		BLANK
			1 1 1 1 0	030	RS							1		BLANK
			1 1 1 1 1	031	US							1		BLANK

Table 2.

ADDRESS (ASCII INPUT)				DECIMAL ADDRESS		OUTPUT DATA (BAUDOT)								USER'S CHARACTER
A8	A7	A6	A5 A4 A3 A2 A1	& ASCII CHR		B1	B2	B3	B4	B5	B6	B7	B8	
			0 0 0 0 0	000	SP	0	0	1	0	0	1	0		SPACE
			0 0 0 0 1	001	!	1	0	1	1	0	0	1		!
			0 0 0 1 0	002	"	1	0	0	0	1	0	1		"
			0 0 0 1 1	003	#	0	0	1	0	1	0	1		# (H)
			0 0 1 0 0	004	$	1	0	0	1	0	0	1		$
			0 0 1 0 1	005	%							1		BLANK
			0 0 1 1 0	005	&	0	1	0	1	1	0	1		&
			0 0 1 1 1	007	'	1	1	0	1	0	0	1		' (J)
			0 1 0 0 0	008	(	1	1	1	1	0	0	1		(
			0 1 0 0 1	000	)	0	1	0	0	1	0	1		)
			0 1 0 1 0	010	*							1		BLANK
			0 1 0 1 1	011	+							1		BLANK
			0 1 1 0 0	012	,	0	0	1	1	0	0	1		, (N)
			0 1 1 0 1	013	-	1	1	0	0	0	0	1		- (A)
			0 1 1 1 0	014	.	0	0	1	1	1	0	1		. (M)
			0 1 1 1 1	015	/	1	0	1	1	1	0	1		/
			1 0 0 0 0	010	0	0	1	1	0	1	0	1		0
			1 0 0 0 1	017	1	1	1	1	0	1	0	1		1
			1 0 0 1 0	018	2	1	1	0	0	1	0	1		2
			1 0 0 1 1	019	3	1	0	0	0	0	0	1		3
			1 0 1 0 0	020	4	0	1	0	1	0	0	1		4
			1 0 1 0 1	021	5	0	0	0	0	1	0	1		5
			1 0 1 1 0	022	6	1	0	1	0	1	0	1		6
			1 0 1 1 1	023	7	1	1	1	0	0	0	1		7
			1 1 0 0 0	024	8	0	1	1	0	0	0	1		8
			1 1 0 0 1	025	9	0	0	0	1	1	0	1		9
			1 1 0 1 0	026	:	0	1	1	1	0	0	1		: (C)
			1 1 0 1 1	027	;	0	1	1	1	1	0	1		; (V)
			1 1 1 0 0	020	<							1		BLANK
			1 1 1 0 1	020	=							1		BLANK
			1 1 1 1 0	030	>							1		BLANK
			1 1 1 1 1	031	?	1	0	0	1	1	0	1		?

Table 3.

After reading my article, "Title Your Pix With A Micro," in the October, 1977, *73 Magazine*, I noted that I failed to include an important point. The character dot spacing is controlled by a delay constant. The constant may have to be modified for 50 Hz (Europe) operation or with different 6800 systems. The constant is: Location 1B30 = 50 Hex.

Clay Abrams K6AEP
San Jose CA

Please note two corrections to our article, "Receive CW With A KIM" (November, 1977). First, in Table 1, the 7-segment code for the character 9 should be E7. And second, page 104, column 2, line 42, should read: "press 'G'. Hold the *hand* key".

Bob Shattuck WB3GCP
Gillett PA

Bill Schmidt WB8VQD
Miamisburg OH

One correction for my "FCC Math" (November, 1977). On page 21, in the middle of the second paragraph from the bottom of column 4, the sentence that begins "If you're not quite sure how . . ." should read: "If you're not quite sure how we got rid of those last 3 zeros at the *end* of each number, go ahead and divide with the zeros left in and you'll find you get the same answer as you would without those zeros. This kind of simplification always works providing you drop the *same number* . . ."

John F. Leahy WB6CKN
Gonzales CA

Re my article in the November, 1977, issue ("Track OSCAR With Your SR-52 – requires the PC 100 option"):

The title is misleading. The PC 100 option is most convenient, but the "bare bones" SR-52 can use the program easily.

And on page 60, column 4, line 42, 703.77.07 should be 70377.07.

Art Burke W6UIX
San Diego CA

Ham Help

Our volunteer ambulance service needs information on where to obtain surplus commercial FM equipment. Any help would be greatly appreciated.

Central County Ambulance Service
c/o Don Mock
222 Wilson Ave.
Clarion PA 16214

Help! I'm going for my Novice exam in 3 weeks. The *73* code tapes have solved my code problems, and I've got the theory licked, but other complications have arisen. I'm trying to set up my station (a Hammarlund HQ-170 and a Hallicrafters HT-37), but somehow the owner's manual has gotten "mislaid." If some helpful person could send me an HT-37 manual (or a copy), I would be forever grateful. I'll be glad to pay any reasonable expense, so feel free to send it C.O.D. if you want. I need the information to set up my T-R hook-up.

Michael D. Ward
3653 Lora St.
Ft. Myers FL 33901
(813) 694-6666

RTTY Loop

Marc I. Leavey, M.D. WA3AJR
4006 Winlea Road
Randallstown MD 21133

Perhaps if your interest in this series has been more than academic, by now you have a TTY machine in a working local loop. You may even have a TU under construction or on line. Hopefully, your appetite is now thoroughly whetted and you *want* to get on RTTY. With the discussion of transmitting techniques this month, I hope to get at least some of you on the air.

Let's step back for a few seconds to review. There are presently two methods currently in use to transmit amateur RTTY: Frequency Shift Keying (FSK) and Audio Frequency Shift Keying (AFSK). I will try to discuss these separately, only slightly interdigitated.

Remember that FSK involves changing the frequency of what is essentially a CW signal in step with the marks and spaces of a TTY signal. The convention presently observed on most amateur circuits is to shift the frequency *downward* for the space. In order to etch this into our minds, the following memory jog has arisen: LSMFT = LOW SPACE MEANS FINE TELETYPE. If there is anyone among you to whom "LSMFT" is a totally foreign string of letters, you are free to devise your own acronym. Thus, we will regard the frequency of an FSK signal as the mark frequency. The space frequency will be lower than the mark, the difference between them being the *frequency shift*. By law, the frequency shift must be less than 900 Hz. As a practical matter, hams long ago chose 850 Hz shift as a "standard." Over the last several years, so-called "narrow" shift, 170 Hz, has risen in popularity, and is rapidly replacing the old "standard."

In many respects, AFSK is analogous to FSK. Here, an *audio* tone is set at a mark frequency, and is shifted for space. Of course, AFSK is not a legal mode on the HF bands, but, as discussed a few months ago, it reigns supreme in the VHF spectrum. Interestingly, because of the evolution of AFSK techniques from FSK, shift convention is reversed from FSK. Here, the space is *higher* in frequency than the mark. Also, because no clear advantage arises from using narrow shift AFSK, 850 Hz shift AFSK is still rather common, with 2125 Hz mark and 2975 Hz space used most often. Now let's look at some circuits.

The frequency-determining circuits of most HF transmitters use an L-C network in the vfo. The most direct means of shifting the rf oscillator frequency is by changing, in small increments, the capacitance in the L-C network. With this in mind, the venerable shift-pot circuit evolved. A diode switch is used to connect or isolate a small capacitor in parallel with the main tuning one. By keeping the diode reverse biased, the keyboard is used to short forward current to ground during mark. Capacitance is added during space, giving a low space, high mark (LSMFT, remember?). Originally, the diode was a tube, such as the 6AL5, but, as the state of the art progressed, the 1N34 became a household word. The most popular version of the shift-pot circuit is shown in Fig. 1. The regulated voltage is normally available in any tube-type vfo, and the entire circuit is easily constructed on a small terminal strip. For a detailed discussion of the shift-pot circuit, see the May, 1965, issue of *QST*.

If a pure sine wave of a given audio frequency is transmitted on single sideband, the resultant rf output will be a CW signal, below or above the suppressed carrier, depending on whether the transmitter is producing lower or upper sideband, respectively. The difference frequency between the suppressed carrier and the CW signal will be the frequency of the original audio tone and, if a pure sine wave was used, there will be no spurious emissions. By extension, then, if a good quality AFSK generator is fed into an SSB transmitter, the output would be FSK! Since AFSK convention dictates low mark, use of lower sideband would produce normal, low space, FSK. If you are contemplating using this technique, however, remember that the transmitter must be scrupulously "clean" and free of carrier or unwanted sideband — and that the AFSK generator must produce pure sine waves without harmonics or "glitches."

Several modern transmitters lend themselves to FSK by relatively simple routes. Although the SB-303/401 combination by Heathkit sports a "RTTY" position on the function switch, this is not practical, as transmission and reception will be on different frequencies. A better way to use the Heathkit on FSK was covered in my article in the August, 1976, *73*. The circuit is also reprinted in *73*'s *New RTTY Handbook*, and is shown here in Fig. 2, if you missed it. WB8DMC shows how to adapt the shift pot to the Drake T4X-B, and W6OJF does the same for the Yaesu FT-101, both in the special "RTTY Edition" of *73* (September, 1977).

For those of you looking to get on AFSK, such as on two meters, suitable generators are simple and inexpensive. The requirement for pure sine wave emission is not as strict, and Fig. 3 diagrams a practical starting point. Originally published in *73*, January, 1972 ("AFSK Revisited," by WA3AJR), this circuit and article have also been reprinted in the *New RTTY Handbook*.

Next month, I'll go over some on-the-air procedures and answer questions. For those of you who have asked, I normally have a printer on the 80 meter W1AW bulletin frequency, 3623.2 kHz mark, 170 Hz shift, on autostart 24 hours a day. If I am home, I'll be delighted to QSO.

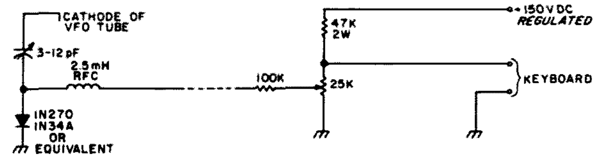

Fig. 1. Shift-pot circuit.

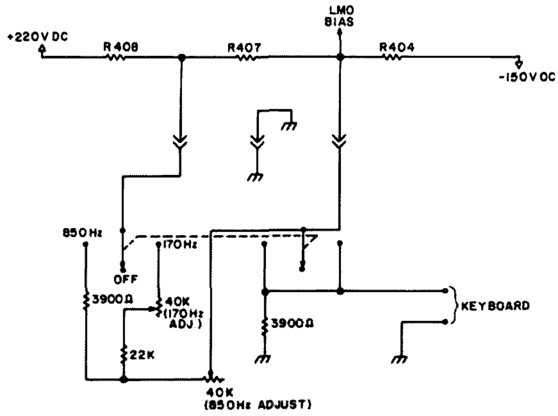

Fig. 2. Heathkit FSKer.

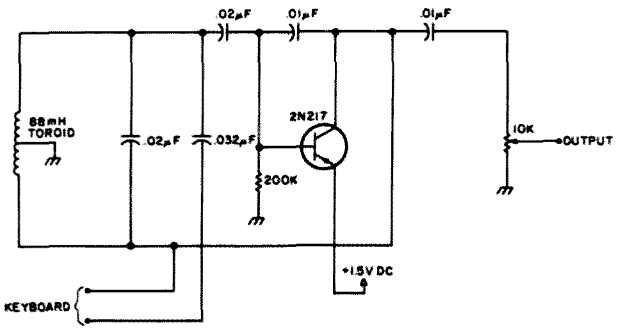

Fig. 3. AFSK generator.

AMSAT

Ross W. Forbes WB6GFJ is now serving as AMSAT QSL Manager for OSCAR cards in the United States. US users should send several #10 (business-size) SASEs with their callsign, in large letters, in the upper left-hand corner. One callsign per SASE, please. Each SASE should have only one ounce of first class postage affixed, and will be mailed when full. Outgoing OX OSCAR QSLs will be forwarded at a rate of 6¢ per card, or 20 cards for $1.00. Domestic OSCAR QSLs will be sorted and processed through the AMSAT-OSCAR QSL Bureau. Domestic OSCAR QSLs can be sent in bulk. For more detailed information concerning the AMSAT-OSCAR QSL Bureau, drop a note, with an SASE enclosed for the reply, to WB6GFJ, PO Box 1, Los Altos CA 94022, or call (916)-673-7677 (weekdays) or (916)-742-0572 (evenings/weekends).

Tracking the Hamburglar

STOLEN: Heath HW-2036 2 meter transceiver. SS No. etched on back. Contact Bobby Sorrow WA4GBM, 130 Sunset Dr., Athens GA 30606, (404) 548-6691, or the Athens police, (404) 543-1431.

RIPPED OFF: Atlas 350XL with DDG-XL digital dial, s/n 877025, and ac power supply for the Atlas, s/n 877104 DS. Taken on October 1, 1977. Jay A. Leonard W5TSM, Rt. 1 Box 32A, Pottsville AR 72858.

New Products

YAESU FT-901 DIGITAL TRANSCEIVER

Yaesu Electronics Corporation has revealed the newest addition to its extensive line of amateur radio equipment, the FT-901 Digital 200 Watt input transceiver with plug-in circuit boards.

The FT-901D covers the amateur bands of 160 through 10 meters, with provision for any new amateur bands that may occur as a result of the upcoming World Administrative Radio Committee's meeting in 1979.

Frequency readout to six places is accomplished by large red-colored LEDs, supplemented with a conventional analog dial. A unique feature is the built-in "memory," which allows split frequency operation without an external vfo. An optional memory unit expander allows many more specific frequencies to be stored and recalled at the operator's command.

A controllable i-f passband allows the operator to adjust i-f width from 100 Hz to 2.4 kHz, continuously. The famed Yaesu rejection tuning is also featured in the FT-901 series, as are sturdy 6146B finals, using an unusual rf negative feedback system to improve linearity. *Yaesu Electronics Corporation, 15954 Downey Ave., Box 498, Paramount CA 90723, (213)-633-4007.*

NEW MULTIFREQUENCY TONE ENCODER/DECODER

American Microsignal Corporation is offering its newest single- or multi-frequency subaudible tone encoder/decoder, model 592.

The unit is available in three configurations – the 592B for direct retrofit in Motorola Motrac, Mocom, and Micor radios, the 592D for General Electric Master Pro, Executive, and Royal radios, and the 592F for use in RCA solid state radios.

The AMC unit is completely compatible with all of these Motorola, General Electric, and RCA subaudible tone systems and is available in either standard or special frequencies, from 20.0 Hz to 250.0 Hz. Provision has been made to accommodate up to six tone frequencies, which may be electronically switched if required. The unit also has the capability of automatic revert for common encode or common decode configuration. The multifrequency circuitry can be provided from the factory or added in the field. Complete step-by-step instructions are provided in a comprehensive installation and service manual.

Applications engineering assistance is available from the AMC customer service department. For more information, contact *American Microsignal Corporation, 8431 Monroe Ave., Stanton CA 90680, or call (714) 761-1222.*

PROM PROGRAMMER

Oliver Audio Engineering now has a new low-cost series of piggyback PROM programmers. For example, the PP-2708/16 PROM programmer plugs directly into any 2708 or TMS-2716 memory socket. The PROM to be programmed is placed in the zero-insertion force socket, and the data is dumped over the 8 lower address lines, using OAE's proprietary interface technique (pats. pending). No additional power supplies are required, and all timing and control sequences are handled by the programmer. Because of this simple interfacing technique, only a short software routine is required to give you the power of even the most expensive programmers. In addition, multiple programmers may be connected in parallel for gang programming.

Each unit comes complete with a dc-to-dc switching regulator, 10-turn cermet trimmers for precise voltage and pulse-width alignment, and a zero-insertion force socket. The unit is packaged in a handsome black anodized aluminum case for tabletop operation. A 5-foot flat-ribbon cable interconnects the programmer with the read-only PROM socket via a 24-pin plug.

The kit price is $249.00. Assembled, tested, and aligned, it's $295.00. (For a limited time, OAE is shipping the assembled, tested, and aligned unit for the kit price!) *Oliver Audio Engineering, Inc., 676 West Wilson Avenue, Glendale CA 91203.*

ALL-GOLD METALLIZATION PRODUCES RUGGED VHF POWER TRANSISTORS

Dissimilar metal interfaces, which can impair the reliability of military-grade rf power transistors, are eliminated in Motorola's new MRF314-317 series of VHF devices. Gold chip metallization, gold wire-bonds, and gold-plated package interfaces produce ruggedness suitable for new, wideband, multimode VHF systems. The 28-volt, 30-to-100-Watt series offers gains from 9 to 10 dB guaranteed at 150 MHz, and is characterized from 30 to 200 MHz. Ruggedness is assured by 100% testing to withstand a load vswr of 30:1 at rated output power.

The 30-Watt MRF314 and MRF314A, in stripline opposed emitter packaging, are priced at $11.00 in 100-piece lots. The similarly-packaged MRF315 and MRF315A, rated at 45 Watts, are 100-piece-priced at $16.50.

Higher-power types, in the "Controlled Q" power package, are the 80-Watt MRF316 and 100-Watt MRF317, at respective 100-piece prices of $34.50 and $39.50. The series is now available from factory and distributor stock. *Motorola Semiconductor Products, Inc., PO Box 20912, Phoenix AZ 85036, (602)-244-6900.*

NEW DENTRON JR. MONITORTM ANTENNA TUNER

With power handling capability of 300 Watts through balanced, coax, and random-wire-fed antennas, DenTron's newest tuner also includes a relative-power output meter and mobile mounting bracket. The Jr. MonitorTM measures a mere 5½ inches wide by 2¾ inches high by 6 inches deep and is ideal for portable, mobile, or fixed operation. DenTron's latest is also ideal for SWLs. Designed to handle virtually any transceiver or receiver-transmitter combination, the Jr. MonitorTM is priced at $79.50. *DenTron Radio Company, 2100 Enterprise Parkway, Twinsburg OH 44087, (216)-425-3173.*

NEW HAMTRONICS CATALOG

Hamtronics, Inc., announces publication of a new expanded 1978 catalog crammed with goodies for VHF/UHF and OSCAR enthusiasts. The 40-page catalog features a new line of VHF and UHF receiver converters, new VHF and UHF FM receiver kits, receiver preamps, FM transmitter kits, power amplifiers for VHF and UHF, test-probe kits, power supplies, tone pads and tone-encoder microphones, antennas, and many more items of interest to the active ham! For your copy of the new 4 x 5½-inch catalog, send a self-addressed stamped envelope to *Hamtronics, Inc., 182 Belmont Rd, Rochester NY 14612.*

HAM COMPUTER PROCESSES MORSE AND BAUDOT

A complete computerized Morse and Baudot operating system for the amateur radio operator was released recently by Curtis Electro Devices, Inc. Called the System 4000, the instrument will receive, decode, and print via CRT Morse code (10-100 wpm) or five-level Baudot TTY code (60-100 wpm). It also serves as a keyboard or paddle keyer, with CRT display of the transmitted text. The Morse keyboard provides a 500-key buffer, eight programmable-message memories, and two fixed-message memories (CQ and ID). The message memories are also available in the paddle-keyer mode. Code speeds are adjustable in one-wpm increments from 10-99 wpm. Morse reception incorporates automatic speed tracking, adjustable presets for nonstandard spacing, and active bandpass filters and shapers for the audio input.

In the Baudot mode, the keyboard buffer is 256 keys long. Eight programmable-message memories and three fixed-message memories (CQ, ID, and Quick Brown Fox) are avail-

The Yaesu FT-901D transceiver.

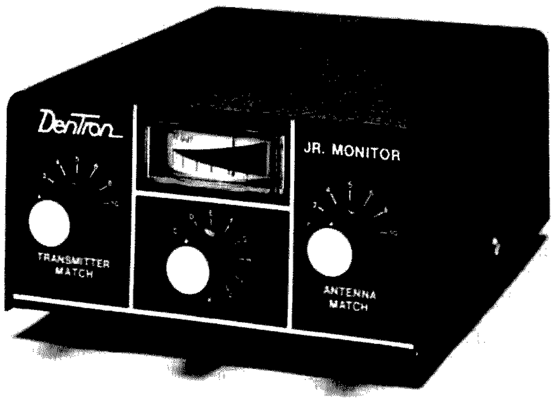

DenTron's Jr. MonitorTM antenna tuner.

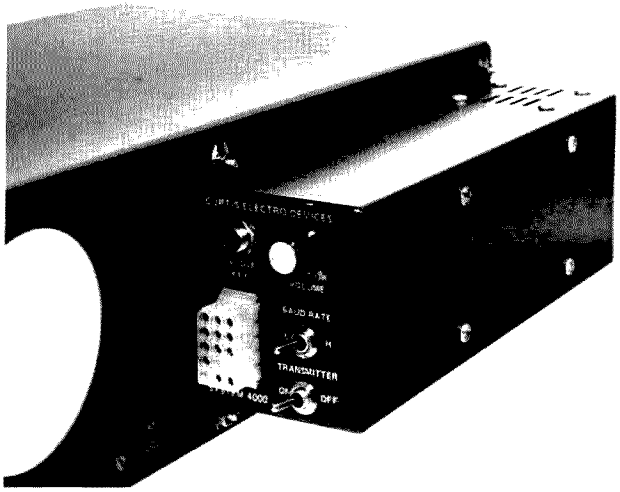

Curtis Electro Devices' TI-100 interface box.

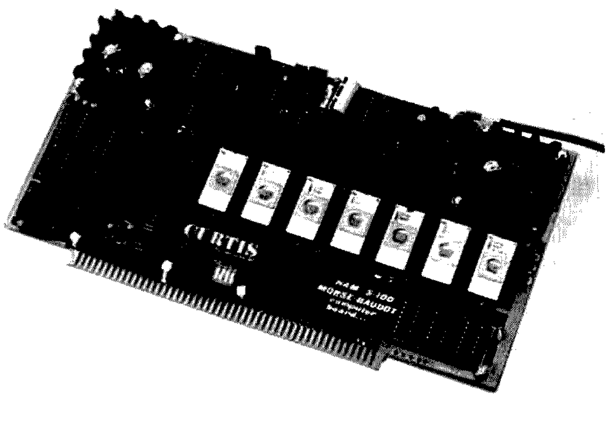

Curtis Electro Devices' HAM S-100.

able, along with CW identification. Other operating conveniences, such as LTRS fill, start-up diddle, automatic carriage return and line feed, are included to make a smoothly-operating Baudot terminal.

The System 4000 is designed to be added onto the popular Processor Technology Corporation's SOL-20 Terminal Computer. It can also be adapted to any S-100 bus 8080 hobby computer by simply adding I/O patches to the user's video driver and console keyboard. No user memory is required.

The System 4000 consists of three parts:

The heart of the system is an S-100 bus plug-in card carrying the operating program in seven 8K EPROMs, 1K of RAM, the Baudot serial interface, parallel interface for station controls, and an audio processor for CW reception. This card, called the HAM S-100, is a stand-alone system, except for the station interface circuitry.

This interface circuitry is available in a unit called the TI-100, which contains relays for the transmitter PTT and keyline plus a standard 60 mA 175 V Baudot receiver and driver. In addition, a monitor sidetone amplifier and speaker are provided together with volume control, paddle-key jack, and a high-low baud rate switch.

The last item, called the "RFI kit," consists of a one-piece special steel cover for the SOL-20 and interface electrical filters for incoming and outgoing RFI suppression.

Conversion of a SOL-20 computer to the System 4000 requires the three items described here and can be accomplished in about thirty minutes. Computer operation remains unaffected.

Price for the HAM S-100 is $699.95; the TI-100 is $149.95; and the RFI kit is $99.95. Delivery is from stock directly from the manufacturer. (The SOL-20 currently is priced at $1100.00 in kit form, $1,500.00 built and tested, and is available from most computer stores.) For further details, write *Curtis Electro Devices, Inc., Box 4090, Mountain View CA 94040, or call (415) 964-3136.*

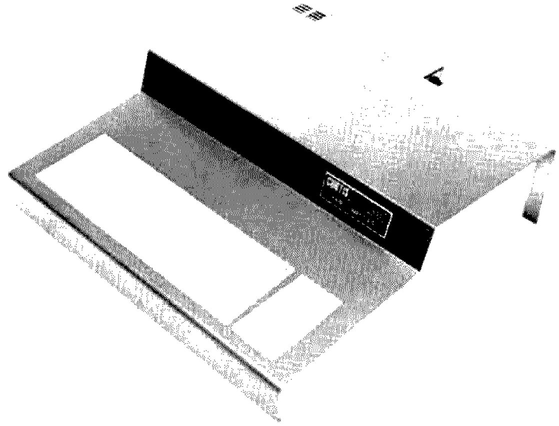

Curtis Electro Devices' RFI kit.

Ham Help

I am a retired broadcast engineer who would like to meet active hams, on the air, who are interested in the historical processes of photography such as carbro, oil, bromoil, etc., for the purpose of exchanging data on the air with the hope of working together to preserve the knowledge of these beautiful processes for future generations of ham-photographers. I work all bands, 2 through 160 meters, AM or SSB. For sked info please contact me.

Tracy Diers W2OQK
58-14-84th Street
Elmhurst NY 11373

I am trying to obtain the schematic and service manual for a Hammarlund SP-600 receiver.

John A. Poplawski WB2GFR/5
PO Box 1708
Killeen TX 76541

I would like to find out if anyone has any open wire insulators. I am not able to get any here, and would appreciate any help along this line. The insulators should have a spacing of ½" for 300 Ohms. I would like to get as many as possible for future use.

Norm Gorcey VE3FRO
101 Haslam St.
Scarborough, Ontario
Canada

I am in need of the schematic for a Bogen Pagemaster receiver, model TR54A (models TR54B & TR54C will also work). These are "pocket pager" units which operate in the 35 MHz range, using a four-reed assembly. I will gladly pay for a photocopy.

Robert L. Leftwich WA4MVA
1926 Langdon Road, SW
Roanoke VA 24015

CONTESTS

Editor:
Robert Baker WB2GFE
15 Windsor Dr.
Atco NJ 08004

A quick note from W1YL at ARRL headquarters indicates a possible rule change for the VHF Sweepstakes in January, with point values for QSOs on higher bands, and also some possible adjustments to the July Radiosport rules. Watch QST for announcements on rule changes as they become final.

As yet, very little contest information has been received for the 1978 season. Please send all contest and award information, including results, as soon as they are official and ready for publication. All information should be addressed directly to my home QTH. Any material sent via Peterborough is only delayed while being forwarded to me.

HUNTING LIONS ON THE AIR CONTEST

Starts: 1200 GMT, January 14
Ends: 1200 GMT, January 15

The contest is sponsored by Lions International and coordinated by the Lions Club of Rio de Janeiro (Arpoador), Brazil. Participation is open to all licensed radio operators except members of the contest committee. The contest will be separated into two sections, phone and CW, with points counting separately and participation allowed in both modes. All bands 80 through 10 meters may be used, with each station being contacted no more than once per band and mode. When contacts are made between Lions and Leos, the name of the Lions Club or Leo Club contacted should be noted in the log. Confirmation of contacts will be made by log comparisons.

SCORING:

QSOs within the same continent count 1 point each; between different continents, 3 points. Bonus points: 1 extra point for a QSO with member of a Lions or Leo Club and 5 extra points for a QSO with a member of the Rio de Janeiro (Arpoador) Lions Club. Contacts between members of the Arpoador Club will not count any bonus points.

ENTRIES AND AWARDS:

Lions International will present first, second, and third place awards in two categories — phone and CW. The first place winner in each category will receive a trophy, the second a medallion, and the third a plaque. The Lions Club of Rio de Janeiro will award additional vermillion award medallions to the fourth through tenth place winners. Each participant making more than 20 points will receive a special QSL from the Lions Club of Rio de Janeiro. Logs should be sent to the contest committee no later than 30 days after the contest: Lions Club of Rio de Janeiro (Arpoador), Rua Souza Lima n. 310 — Apt. 802, Rio de Janeiro 20.000, ZC-37 Brazil.

ARRL VHF SWEEPSTAKES

Starts: 1400 your local time, Saturday, January 21
Ends: 2400 your local time, Sunday, January 22

Complete rules for the 30th VHF Sweepstakes can be found in the December issue of *QST*; please check for new scoring this year. Briefly, the rules are as follows:

All amateurs operating on or above 50 MHz are invited to participate. Contacts between stations in different time zones can be counted only when the contest period is in progress in both zones. Foreign stations may only work stations in ARRL sections. Crossband work and retransmitted signals (repeaters) are not allowed. Contacts with aircraft mobiles cannot count for section multipliers. Official logs may be obtained from the ARRL. Send contest logs and summary sheet to: ARRL, 225 Main Street, Newington CT 06111.

CQ WW DX 160 CONTEST

Starts: 2200 GMT Friday, January 27
Ends: 1600 GMT Sunday, January 29

Sponsored by *CQ Magazine*, this is a CW-only contest with no crossmode contacts allowed.

EXCHANGE:

RST plus three-digit QSO number and state or province; DX should send RST and QSO number only.

SCORING:

W/VE/VO score 2 points per QSO with other W/VE/VO stations, 10 points per DX contact. All other countries score 2 points per QSO with stations in same country, 5 points in other countries, 10 points with W/VE/VO. Multipliers for all stations are number of states, VE provinces, and DX countries worked. Final score is total QSO points times sum of multipliers.

ENTRIES & AWARDS:

Violation of rules, regulations, etc., may be deemed sufficient cause for disqualification. Certificates to top scorers in each state, VE province, and DX country. Log sheets may be obtained from *CQ* by sending a large SASE. Mail entries and log requests to: *CQ* 160 Contest, 14 Vanderventer Ave., Port Washington NY 11050.

Note: please check *CQ Magazine* for any last minute rule changes!

FRENCH CONTEST

CW
Starts: 0000 GMT, January 28
Ends: 2400 GMT, January 29

Phone
Starts: 0000 GMT, February 25
Ends: 2400 GMT, February 26

All contacts must be made on 160 meters CW (or 1,826 MHz for F stations). All entries must be single operator.

EXCHANGE:

CALENDAR

Jan 1	ARRL Straight Key Night
Jan 7-9	ARRL CD Party — Phone
Jan 14-15	Hunting Lions On the Air
Jan 21-22	ARRL VHF Sweepstakes
	ARRL CD Party — CW
Jan 27-29	CQ Worldwide 160 Contest — CW
Jan 28-29	French Contest — CW
	ARRL Simulated Emergency Test
Feb 4-5	ARRL DX Contest — Phone
Feb 4-12	ARRL Novice Roundup
Feb 11-12	10-10 International Net Winter QSO Party
Feb 18-19	ARRL DX Contest — CW
Feb 25-26	French Contest — Phone
Mar 4-5	ARRL DX Contest — Phone
Mar 18-19	ARRL DX Contest — CW
Apr 1-3	QRP QSO Party
Apr 8-9	ARRL CD Party (Open) — CW
Apr 15-16	ARRL CD Party (Open) — Phone
June 3-4	IARS/CHC/FHC/HTH QSO Party
June 10-11	ARRL VHF QSO Party
June 24-25	ARRL Field Day
	REF TEN Day
July 4	ARRL Straight Key Night
July 8-9	IARU Radiosport Competition
Sept 9-10	ARRL VHF QSO Party
Oct 14-15	ARRL CD Party — CW
Oct 21-22	ARRL CD Party — Phone
Nov 4-5	ARRL Sweepstakes — CW
Nov 18-18	ARRL Sweepstakes — Phone
	REF TEN Day
Dec 2-3	ARRL 160 Meter Contest
Dec 9-10	ARRL 10 Meter Contest

RESULTS

RESULTS OF THE 1977 MICHIGAN QSO PARTY

WA8MOA	Calhoun county	66,160 points
WA8WWM	Leelanau	65,760
W8PBO	Macomb	54,960
WB8IOT	Saginaw (multi-op)	32,376
WD8DRF	Oakland	32,120
WA8CZH	Washtenaw	28,672
W8GLC	St. Clair	18,480
K8DAC	Saginaw (multi-op)	16,244
W8YL	Lenawee	10,505
W8OGP	Hillsdale	5,633
WD8DQV/8	Osceola	5,590
WB8NSF	Berrien	3,960
WA8CZH/8	Wayne	1,920
K8CJF	Saginaw	1,700
WBVSK/mB	(6 counties)	1,020
WB8BUQ	Wayne (QRP)	230
WB8FEZ	Genessa (VHF)	1,102

The Club trophy went to the L'Anse Crouse ARC, which had 139,547 points. The top out-of-state scorer was WA4KKP in VA with 4,814 points; second place went to W5KLB in TX with 2,884 points; and third place went to W8KS8/3 in MD with 2,236 points.

RESULTS

AMERICAN RESULTS OF THE 1977 FRENCH CONTEST

CW:		
W1MDO	20880	120
W1OPJ	27	9
WA2EJZ	396	12
W3ARK	6336	66
W3FCI	1425	25
W3EUJ	432	24
WB4OGW	36087	208
WA4ZHU	15048	170
WB4FHI	4143	47
K4OAQ	3159	39
N4MM	2687	39
WB4WHE	216	9
W8VSK	13884	89
K8CW	10260	76
WA8KME	1377	17
K8LUU	3645	47
WB8WTD	810	18
W9OHH	23166	132
WA9VOL	5994	55
W0PRY	10662	79
WØBK	1684	33
SSB:		
WA1WFS	11244	84
F2YS/W2	12069	107
WA2EJZ	386	16
LU1BAR/W3	7401	72
W3FCI	4785	39
W3AKD	1485	15
N4MM	17286	87
WA4SHL	9408	70
K4KZP	3276	44
WA4LOF	3207	27
WB4OGW	4017	52
WB5MSU	225	5
WA9FZQ	1876	59

RESULTS

1977 YLRL HOWDY DAYS RESULTS

YLRL Members:		Score
Christa Elksnat	DJ1TE	103
Vera Klecowsky	WA1JYO	61
Onie Woodward	W1ZEN	51
Iona O'Donnell	WA2DMK	22
Phyllis Shanks	W2GLB	52
Lia Zwack	WA2NFY	69
Ernestine Boerner	WA2VIE	37
Doris Bedford	K4AOH	53
Patricia Williams	WB4PRM	72
Irma Weber	K6KCI	71
Jane Willis	K6RLR	74
Sandi Heyn	WA6WZN	62
Marion Dixon	WA7TLL	19
Eva Karnatz	WA8AHU	86
Marilyn Backys	WB9TDR	46
Lovelle Pedersen	WB6JFF	49
Martha Shirley	W0ZWL	44
Anny Schwager	DF2SL	61
Ella Grindel	DJ5UAC	34
Paula Blomen	DJ8EK	33
Margot Semkat	DKSTT	71
Ursula Burger	DL3LS	25
Clare Dixon	EI7CW	75
Renee Chassard	FSRC	28
Dr. Greta Hubacher	HB9ARC	44
Berit Nesse	LA3RN	31
Karin Jensen	OZ1AVV	20
Diana Vanderzande	VE7DTO	32
Non-YLRL Members:		**Score**
Darleen Magen	WD5FQX	90
Juliana Schuhegger	DJ1EIC	53
Ursel Weiskirchen	DF2KG	85
Juliane Schuhegger	DF3RF	17
Elfi Butterstein	DF3TE	40
Alice Rudolph	HB9BIR	23

RS(T) and QSO number.

SCORING:

Score 3 points for each F or overseas French department or territory contacted in your own continent (10 points if in another continent). Multipliers are each F department (95) and FFA (DA), each DOM (FG, FM, FY, FR), each TOM (FB8W, FB8X, FB8Y, FB8Z, FK, FO, FP, FU, FW, FH-Mayotte Is.), and each other country of the DXCC list. French stations will give their department number after the call. Example: F6ZZZ/67 and FFA will give DA.../FFA. Final score is the sum of the QSO points times the sum of multipliers. Send logs only to the REF Traffic Manager, 2, Square Trudaine, 75009 Paris, France.

FLAMINGO NET 25TH ANNIVERSARY AWARD

Beginning on January 1, 1978, in celebration of its 25th anniversary, the Flamingo Net of Miami, Florida, will be offering a special 25th anniversary seal to be attached to the Flamingo Net certificate.

To qualify, a certificate holder is required to have worked 10 other certificate holders, exchanging certificate numbers, callsigns, names, and locations. A non-certificate holder, during the anniversary year, may make contact with 20 certificate holders, collecting their certificate numbers, callsigns, names, and locations. The non-certificate holder will receive a certificate affixed with a 25th anniversary seal. During 1978 *only, all* persons holding Flamingo Net certificates can exchange certificate numbers to assist others in obtaining the Flamingo Net certificate and anniversary seal.

All contacts will take place on 10 meters. A $1.00 fee will be charged to cover the cost of handling. All applications are to be sent to Walter Dixon W4DWN, 820 NE 123rd Street, Miami FL 33161. This offer will end on December 31, 1978.

DX DECADE CLUB (DXDC) AWARD

This award is available to any amateur who can present confirmed proof of contact on the 6 meter band with 10 foreign countries (including US) from the ARRL country list. All contacts must have been made on or after January 1, 1976. The cost of the award will be $3, payable to SMIRK. Money made from this award will be used to finance "DXpeditions" and equipment for use by hams in foreign countries who would like to operate on 50 MHz. Additional endorsements for every 5 countries over the original 10 are available for $1 each. Send an SASE for application forms to: J. Chipman WA1KYH, DXDC Manager – SMIRK, 18 Laurel Dr., Medfield MA 02052.

WAB BRITISH COUNTIES AWARD

Sponsored by the Worked All Britain (WAB) Organization, the award is available in two classes: Class 2 is for any 55 UK counties, Class 1 is for all the UK counties and Scottish regions, plus one GC/GJ (Jersey), one GC/GU (Guernsey, Alderney, or Sark), and one GD. Contacts with UK amateurs since May 1, 1974, count. No QSLs are required with the application – only a certified list showing date, time (GMT), county of UK station, RS(T) reports, and callsign of station worked.

Cost of award and postage worldwide is $2.00 (USA) or 20 IRCs. Cost of further claim to upgrade Class 2 to Class 1 is $1.00 or 10 IRCs. Claims to Alec Brennend G4AVA, 76 Deneley Avenue, Todmorden Via, Lancashire, England.

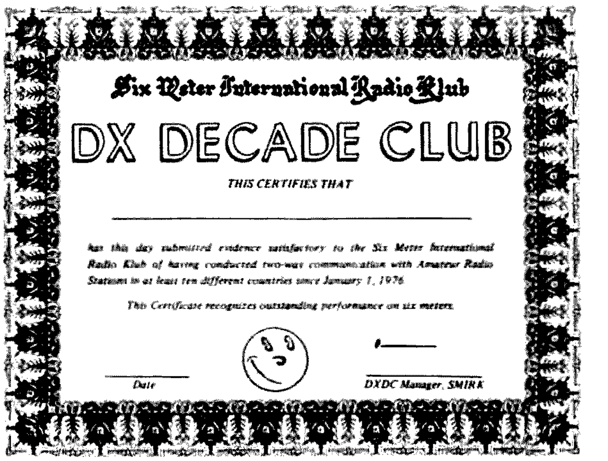

FEDERAL COMMUNICATIONS COMMISSION

[Docket No. 19759; RM-1633; RM-1656; RM-1747; RM-1761; RM-1793; RM-1841; FCC 77-682]

[47 CFR Part 95]

TERMINATION OF PROCEEDING CONCERNING CREATION OF A NEW CLASS OF CITIZENS RADIO SERVICE

AGENCY: Federal Communications Commission.

ACTION: Termination of Rulemaking Proceeding (Memorandum Opinion and Order in Docket 19759).

SUMMARY: The FCC is terminating Docket 19759, in which we had proposed a new Class "E" Citizens Radio Service in the 220-225 MHz frequency range. Since the 1973 release of our proposals the character of personal radio communications has undergone radical change. We believe any further allocation of frequencies for personal radio communications should be the subject of a new rulemaking proceeding.

ADDRESS: FCC, Washington, D.C. 20554.

SUPPLEMENTARY INFORMATION:

MEMORANDUM OPINION AND ORDER

(PROCEEDING TERMINATED)

Adopted: October 5, 1977.

Released: October 18, 1977.

By the Commission: Chairman Wiley not participating; Commissioner Lee absent.

In the matter of: The creation of a new class of Citizens Radio Service and the reallocation of frequencies between 224 and 225 MHz in the band 220-225 MHz now allocated for shared use by stations in the Amateur Radio Service and Government Radiolocation Stations for that purpose; Docket 19759, RM-1633, 1656, 1747, 1761, 1793, 1841.

1. In June 1973, the Commission issued a Notice of Inquiry and Notice of Proposed Rule Making in which it proposed to allocate spectrum in the 220-225 MHz band for a new Citizens Radio Service to be designated as Class E. This new radio service was to be similar to the then established Class D service, but was to operate under new rules and enforcement procedures.[1] The proceeding stemmed primarily from a petition of the Electronic Industries Association (EIA).[2] The petition stated that there was a "demonstrated strong, current and growing need for personal two-way radio communications for both safety and convenience of individual citizens in conducting their daily activites of both a personal and business nature." Support for the petition came from potential manufacturers of Class E equipment and from land mobile users groups, who viewed the new frequency allocation as a possible source of relief from crowded land mobile channels and high equipment costs.

2. In issuing the June 1973 proposal, the Commission noted that it had always recognized that the 27 MHz region was not ideally suited for the CB Radio Service because of the sporadic long distance transmission characteristics of this band. It was further noted that the purpose of the Class E proposal was to better meet the requirements of the general public for improved radio communication services, and to relieve the concentration of stations at 27 MHz.[3] Therefore, the Commission requested comments directed to these specific topics:

a. Services and types of operations which should be provided.

b. Economic, sociological, and other possible public interest benefits.

c. Effects on CB operations at 27 MHz.

d. The nature and probable impact of limitations resulting from interagency and international objections.

e. Detailed technical parameters, including recommendations on the amount of spectrum needed, channeling, power antennas, receivers, et al.

f. Automatic transmitter identification (ATIS).

g. Licensing methodology and record keeping.

h. Continuation vs. elimination of 27 MHz CB operation.

i. Confiscation of illegal equipment.

3. Several thousand Comments and Reply Comments were received. A careful analysis of the comments revealed no consensus of opinion on any issue. The largest volume of comments came from amateur service licensees who protested that the proposed reallocation would, in effect, be penalizing their service to reward CB violators. Many comments from CB licensees opposed the proposal because they feared it might result in their loss of the present 27 MHz allocation. Although EIA, E. F. Johnson, other manufacturers, NABER, and other land mobile user groups supported the essence of the Class E proposal, they disagreed among themselves on what the specific characteristics of the new service should be.

4. Subsequent to the adoption of the Class E proposal, the Commission conducted tests which indicated that a personal radio service operating in the 220-225 MHz band might generate serious interference to television reception on the VHF channels. The Commission does not yet know how severe this interference might be, or whether this interference might be prevented. This has delayed all further rule making in the docket. In the meanwhile, a number of major changes have occurred:

a. The number of CB licensees has increased dramatically, to 10,406,828 as of May 1977. Accompanying this growth has been a change in the nature of how the service is used.

b. In February 1976, the Commission formed the Personal Radio Planning Group (PRPG) to conduct a broad-based, in-house study of personal radio services. In April 1976, the Commission solicited the assistance of the industry and users by establishing the Personal Use Radio Advisory Committee.

c. In July 1976, the Commission provided interim relief from congestion at 27 MHz by increasing the number of authorized CB Radio Service channels from 23 to 40.[4]

d. In April 1977, the PRPG completed the initial phase of its frequency evaluation study.[5] The results of this study, together with other information available to the Commission leads to the conclusion that other frequencies as well as the 220-225 MHz band should be considered as a possible location for a personal radio service.

5. As a result of these and other developments, the comments and reply comments received on this docket have become obsolete. Further, the Commission believes that the specific topics set forth in the June 1973, NOI/NPRM are no longer adequate to lay the basis for authorization of a personal radio service. New rule making will have to be framed with information which has been developed recently, and which will be developed in the next few months. Leaving this docket open may only mislead the public about the Commission's intention to fully investigate the future of personal radio. For these reasons, the Commission has determined to terminate Docket 19759, and to address the issue of new personal radio services in some future rule making.

6. In view of the foregoing, we believe that the public interest, convenience, and necessity is best served by termination of this proceeding. Accordingly, pursuant to authority contained in Sections 4(i), 303 of the Communications Act of 1934, as amended, it is ordered, that this proceeding is terminated.

FEDERAL COMMUNICATIONS COMMISSION,
VINCENT J. MULLINS,
Secretary.

[1] The Class D Service has been redesignated the Citizens Band (CB) Radio Service.

[2] RM-1747, filed on February 5, 1971.

[3] The number of licensees had increased from 49,000 in 1959 to 836,924 in June 1973.

[4] Docket No. 20120, Second Report and Order, Adopted July 27, 1976.

[5] The report, entitled Spectrum Alternatives for Personal Radio Services was released to the public for comment by News Release April 25, 1977.

[Docket No. 21418; FCC 77-715]

AMATEUR RADIO SERVICE

Inquiry Into Alleged Improper Issuance of Licenses and Call Signs; Order

Adopted: October 13, 1977.

Released: October 19, 1977.

By the Commission: Chairman Wiley not participating; Commissioner White concurring in the result.

1. The Commission has under consideration information indicating:

(a) That certain applicants and licensees in the Amateur Radio Service have made payments of cash or other consideration in connection with issuance of licenses, upgraded licenses, or call signs for which they were not qualified.

(b) That certain applicants and licensees in the Amateur Radio Service have received licenses, upgraded licenses, or call signs for which they were not qualified without any payment.

(c) That certain applicants and licensees in the Amateur Radio Service have received call signs in a manner inconsistent with the Amateur Radio Service Rules then in effect.

2. The above-described practices may be in violation of law and/or Commission Rules. Participation in such practices may raise serious questions regarding qualifications to become or to remain Amateur Radio Service licensees.

3. Therefore, *it is ordered*, on the Commissions own motion, pursuant to Sections 403 and 409 of the Communications Act of 1934, as amended, that an inquiry is hereby instituted to determine whether applicants or licensees in the Amateur Radio Service have engaged in the above-described practices and, if so, the extent and circumstances of such practices.

4. *It is further ordered*, pursuant to Section 5(d)(1) of the Communications Act of 1934, as amended, that, for the purpose of this inquiry, authority is hereby delegated to the Chief Administrative Law Judge of the Commission to require by subpoena the production of books, papers, correspondence, memoranda and other records deemed relevant to the inquiry, to administer oaths and affirmations, subpoena witnesses, compel their attendance, take evidence, and to perform such other duties in connection therewith as may be necessary or appropriate to the compilation of a complete record concerning the subject matter of this inquiry.

5. *It is further ordered*, That the Chief, Administrative Law Judge is specifically authorized to designate a Presiding Judge to exercise the authority conferred by this Order, and to require witnesses to testify and to produce evidence under authority of, and in the manner provided in, Section 409 of the Communications Act of 1934, as amended, when requested to do so by Commission counsel.

6. *It is further ordered*, That the subpoena powers delegated by this Order shall be exercised in accordance with Sections 1.331 through 1.340 of the Commission's Rules. Motions to quash or limit subpoenas shall be directed to the Presiding Judge in accordance with Section 1.334 of the Rules. Applications for reiew of the Presiding Judges rulings on such motions may be filed with the Commission within ten (10 days) after the issuance by the Presiding Judge of such rulings.

7. *It is further ordered*, That the provisions of Section 1.27 of the Commissions Rules shall apply to the production of oral and documentary evidence under subpoena.

8. *It is further ordered*, That, pursuant to Section 5(d)(1) of the Communications Act of 1934, as amended, the authority to decide the question of when the public interest would be served by holding non-public sessions in this proceeding is hereby delegated to the Presiding Judge.

9. *It is further ordered*, That upon conclusion of the inquiry ordered herein, the Presiding Judge shall certify the record thereof to the Commission for appropriate action.

FEDERAL COMMUNICATIONS COMMISSION,
WILLIAM J. TRICARICO,
Acting Secretary.

(Docket No. 21033; RM-2664; RM-2780)

PART 97—AMATEUR RADIO SERVICE

Simplifying Licensing and Operation of Complex Systems of Stations and Modifying Repeater Subbands

ACTION: Final rules.

SUMMARY: The FCC is editorially amending its Amateur Radio Service Rules to correct several errors and omissions contained in its recent Report and Order in Docket 21033, 42 FR 52418 (September 30, 1977).

EFFECTIVE DATE: November 7, 1977.

SUPPLEMENTARY INFORMATION: In the matter of deregulation of Part 97 of the Commission's rules to simplify the licensing and operation of complex systems of stations and modify repeater subbands in the Amateur Radio Service; Docket 21033, RM-2664, RM-2780.

Adopted: October 25, 1977.

Released: October 26, 1977.

1. In a Report and Order in Docket 21033 released September 27, 1977, 42 FR 52418 (1977), the Commission substantially revised its Rules concerning the licensing and operation of stations in repeater operation in the Amateur Service. In so doing, we made a number of errors and omissions, which were not intended to become part of the final rules adopted in this proceeding. We are therefore editorially amending the Amateur Service regulations, as follows:

a. In Section 97.3(n), we are adding a second sentence to the definition of control to bring the definition into conformity with the former definition. We are renumbering the definition of automatic control as it was previously numbered.

b. We are rewording Section 97.61(a) to eliminate an ambiguity.

c. We are correcting Section 97.67(e) to change the maximum effective radiated power for stations in repeater operation operating on 144.5 MHz and above from 200 watts to 100 watts, the prior standard.

d. In Section 97.84(d), we are adding a line over the letters "DN" to indicate the telegraphy signal for the fraction bar.

e. In Section 97.88(a)(2) we are eliminating the reference to "control station", because control stations were deleted by the Report and Order in this proceeding.

2. Authority for this action is contained in Sections 4(i), 5(d) and 303 of the Communications Act of 1934, as amended. Because these amendments are editorial in character, intended merely to correct previous errors and clarify existing rules, the prior notice and public procedure provisions of the Administrative Procedure Act, 6 U.S.C. 553, are not applicable.

3. Accordingly, it is ordered that Part 97 of the Commission's Rules is amended as set forth below effective November 7, 1977.

(Secs. 4, 5, 303, 48 Stat., as amended, 1066, 1068, 1082 (47 U.S.C. 154, 155, 303).)

FEDERAL COMMUNICATIONS COMMISSION,
R. D. LICHTWARDT,
Executive Director.

Part 97 of Chapter 1 of Title 47 of the Code of Federal Regulations is amended, as follows:

1. In § 97.3(n), the definitions of control and automatic control are amended to read, as follows:

§ 97.3 Definitions.

* * * * *

(n) *Control* means techniques used for accomplishing the immediate operation of an amateur radio station. Control includes one or more of the following:

* * * * *

(3) *Automatic control* means the use of devices and procedures for control so that a control operator does not have to be present at the control point at all times. (Only rules for automatic control of stations in repeater operation have been adopted.)

* * * * *

2. § 97.61(a) is amended to read, as follows:

§ 97.61 Authorized frequencies and emissions.

(a) The following frequency bands and associated emissions are available to amateur radio stations for amateur radio operation, other than repeater operation and auxiliary operation, subject to the limitations of § 97.65 and paragraph (b) of this section: * * *

* * * * *

3. In § 97.67, paragraph (c) is amended to read, as follows:

§ 97.67 Maximum authorized power.

* * * * *

(c) Within the limitations of paragraphs (a) and (b) of this section, the effective radiated power of an amateur

Continued on page 185

FCC Math

John F. Leahy WB6CKN
P.O. Box 539
Gonzales CA 93926

In the previous two installments we've played around with frequency and wavelength and Ohm's Law. We've also seen something of prefixes, abbreviations, decimals, units of measurement, and a bunch of other goodies. In this installment, we'll tie up some more loose ends and then launch ourselves into handling some of the *monstrous* numbers of electronics through the use of a tool called "powers of ten." If you're familiar with powers of ten and all, you might want to skip this installment. But if it's new to you, a careful study of these pages will reward you with a powerful tool for handling difficult computations with ease, if that isn't a contradiction in terms.

First to the loose ends. We reviewed decimal division, among other things, last time. Now let's put some logic into the rules we learned and, in the process, pick up a few more tricks for handling fractions.

You recall the kind of Ohm's Law problem we posed and solved? For example: 19 mA at 27 V, what's the resistance? The fraction here is 27/0.019, which, as we saw, is handled: $19\overline{)27{,}000}$. At the time, you may have asked yourself, "What gives one the right to move decimal points around like that? Where's the logic involved? Or do we just kind of sneak into these rules because they happen to work?"

Actually, there's very little sneaking done in math and science these days (unless it's to the cookie jar, whatever form that takes nowadays). As a matter of fact, the logic of this process is usually covered in the 5th grade — in modern schools, that is.

So here's a 5th grade problem: Add 2/7 + 2/3. It's usually done vertically:

$$\begin{array}{rl} & \frac{2}{7} \cdot \frac{3}{3} = \frac{6}{21} \\[6pt] + & \frac{2}{3} \cdot \frac{7}{7} = \frac{14}{21} \\ \hline & \qquad\;\; \frac{20}{21} \end{array}$$

The dot between fractions means multiply. The question is, where do that 3/3 and 7/7 come from? You no doubt recognize both as hidden 1s. $3 \div 3 = 1$ and $7 \div 7 = 1$. Of course, multiplying by 1, even if that 1 is in a weird form like 7/7, still just gives that same something we started off with, though with a different look. 6/21 definitely looks different from 2/7, though they sure enough equal each other.

Now, that's actually one of the powerful tools I've been talking about. You can get a number into just about any form you want just by multiplying by 1 in some form or other. You can't add 2/7 + 2/3 directly, but multiply both by 1 (in a well-chosen form) and we get things we can add together easily.

But back to our fraction 27 V/0.019 A. Multiply by 1 in the form 1000/1000 and we get 27,000/19, which is, of course, $19\overline{)27{,}000}$. So now you see how that decimal point got moved where it did. And why did we choose 1000/1000 as the form of 1 to use here? Simply because that's what was needed to move the decimal point to the right of the 9 — thereby, for all practical purposes, eliminating the decimal problem altogether. Note how that works. When using 100, 1000, 10000, etc., as multipliers, the result is the same as if you just moved the decimal point one place to the right for each zero in the 10, 100, 1000, or whatever. Here we multiplied by 1000, so we moved the decimal three places to the right (and added three zeros to the 27). The same kind of thing is true of division, only now you move to the left. Division by 100 means move two places to the left. 4,100/100 = 41.

Thus, for an Ohm's Law problem like 800 V/7000 Ω, we can divide both top and bottom by 100, giving 8/70. You still have the division $70\overline{)8}$ to perform, but most people find that easier than 7000)800.

That's also how we derive formulas from λ = 300,000,000/f(in Hertz) for working directly with kilohertz and megahertz. Suppose our signal is at 3.740 MHz. What's the wavelength? We have 300,000,000/3,740,000 using the formula with Hertz. But divide top and bottom by 1000, and we have 300,000/3,740. Note that 3,740 is our frequency as it looks expressed in kilohertz. Divide by 1000 again and we get 300/3.740, where the 3.740 is our frequency in megahertz. So the formula works directly with Hertz, kilohertz and megahertz. You just have to remember how many zeros go after the 3 in the top. λ = 300,000,000/f(Hz), λ = 300,000/f(kHz), and λ = 300/f(MHz). We got those variations just by dividing by 1 in the form 1000/1000.

A similar bit of reasoning allows us to use Ohm's Law directly with milliamps and kilohms, and microamps and megohms. Back to that example we used earlier: Given 19 mA and 27 V, what's the resistance? Divide 19 into 27,000 and we get 1400 (with two-digit accuracy). That's 1.4 kilohms. But dividing 19 into 27 simply, we get the same 1.4. Thus, dividing milliamps directly into volts (without first changing to Amps) gives kilohms for an answer (surprise, surprise). And the other: 75 microamps at 110 volts, what's the resistance? The fraction is 110 V/0.000075 A. Multiply top and bottom by 1,000,000 (because we need to move the decimal point six places to get it to the right side of the bottom number), and we get 110,000,000/75, which divided out is 1,500,000 Ohms, 1.5 megohms. But divide 75 into 110 simply and you get the same 1.5. Voilà! Microamps into volts produces megohms. And the other way around is true. Megohms into volts gives microamps. And kilohms into volts produces milliamps.

Now here's a little exercise. See if you understand what we've done. Work and answers to exercises are at the end of the column.

Exercise 1:

(1) Multiply by 1 (in some clever form) to get rid of decimals:

(a) $\frac{780\text{ V}}{0.085\text{ A}}$ (b) $\frac{35\text{ V}}{0.000090\text{ A}}$

(2) Convert the Amps of problem 1 into milliamps and then microamps.

(3) Work (a) using milliamps directly and (b) using microamps directly.

(4) Find the wavelength of each directly:

(a) 21.250 MHz

(b) 3825 kHz

(c) 60 Hz

POWERS OF TEN AND STUFF

We've already seen some pretty monstrous numbers in electronics, what with those pico and micro and mega prefixes and all. And I've indicated that computations with such numbers are the rule rather than the exception.

A rather basic computation is that of reactance. The reactance of a capacitor, X_C (its resistance to the flow of current at a given frequency), is found from the formula: $X_C = 1/2\pi fC$. We'll get into this formula later on, but for now it'll suffice to look at the kind of computation that formula implies. π, the Greek letter pi, equals about 3.14. Say the frequency, f, is 14.200 MHz, and the capacitance, C, is 13 nF (13 nanofarads). This is the computation we'd have to do:

$$\frac{1}{2(3.14)(14{,}200{,}000)(0.000000013)}$$

The parentheses in the bottom mean you multiply each of those numbers together. And this is by no means the most difficult computation you might run into on an FCC exam (Tech class and above). Needless to say, we've got to learn some additional tricks or we're going to have one heck of a time handling these things. Fortunately (math to the rescue), scientists aren't any more fond of such torture than the rest of us and have come up with classy (and relatively easy) ways of doing problems of this sort. So let's follow along with some of their thinking.

You're no doubt familiar with squares. You find them all over the place, heads buried in books, etc. Well, that's not quite the kind I have in mind right now. If you have a calculator in the house somewhere, perhaps one of its buttons deals with the kind of square we want here. Enter a 7 into your calculator and push the x^2 button. You get 49. Obviously 7^2 (seven squared) equals 49, and the small 2 must mean that two 7s are being multiplied together. Similarly, 5^3 (called five cubed or five to the third) means 5 x 5 x 5 or 125. The small 3 written above and to the right is called an exponent. It tells you how many of the number are being multiplied together. Thus 8^5 means 8 x 8 x 8 x 8 x 8, or 32,768.

You can see right away that there's some shorthand involved here. If 8^5 equals 32,768, then we can use two digits to express a five digit number, even if the form is not terribly useful for computations.

But using exponents with *10* proves to be very useful, *especially* for difficult computations. Consider some powers of ten (as they are called). 10^2 = 10 x 10, or 100. 10^3 = 10 x 10 x 10, or 1000. 10^4 = 10 x 10 x 10 x 10, or 10,000. First, note that the exponent and the number of zeros after the 1 in each number are the same. 10,000 is 10^4. There are four zeros and the exponent is 4. That's important to remember. It makes changing to powers of ten and back very easy for our computations.

Admittedly, this is not terribly enlightening. But now watch. 10,000,000 ÷ 1000 = (remember we move the decimal point three places to the left) 10,000. Let's see that with powers of ten. 10,000,000 is 10^7 (there are seven zeros). 1000 is 10^3. 10,000 is 10^4. In other words, $10^7 \div 10^3 = 10^4$. Note that 7 - 3 = 4. That's it! There you have the first important simplification with powers of ten. To divide with powers of ten all you have to do is subtract exponents. Take another example, 10,000,000,000,000 ÷ 100,000,000. That's 10^{13} (ten to the thirteenth) ÷ 10^8 (ten to the eighth). The answer is 10^{13-8} or 10^5, which is 100,000. Wow, look at that, huge numbers divided just by subtracting small numbers in your head!

Big deal! How often do we just use powers of ten in our computations? There's a big difference between 1000 and, say, 3025. Obviously, most computations involve digits other than 1 and 0. So now let's see what we can do about putting what we just learned together with other digits.

We'll start by doing some multiplying. 3.25 x 1000 (10^3) = 3,250. So, going in reverse, 3,250 = 3.25 x 10^3. Again, 8.65 x 100,000,000 (10^8) = 865,000,000. (Remember how we do that. Move the decimal point one place to the right for each zero in the 100,000,000.) So, going backwards, 865,000,000 = 8.65 x 10^8.

You don't need to go through many of these before you realize that any

number larger than one (we'll get into numbers smaller than one next time) can be expressed as something times a power of ten. 578 can be expressed as 5.78×10^2. 2,183,000 can be 2.183×10^6, etc., etc. Now it may not seem terribly smart to change 578 to 5.78×10^2, something that takes up more room than the original number, but when you see how easy multiplication and division become by changing every number into a form like that, you'll probably welcome the idea.

We'll get back to that in just a minute, but first let's see what happens when we multiply powers of ten (we've already seen what happens when we divide, how the exponents subtract).

Take 1000 x 10,000, for example. That's 10,000,000. In powers of ten it's $10^3 \times 10^4 = 10^7$. Notice how 3 + 4 = 7. That's very significant. To multiply powers of ten you just add exponents! Try another. 1,000,000 x 100. That's $10^6 \times 10^2$. Answer? Why, 10^8 or 100,000,000, of course. Notice how we're handling big numbers quite easily. And keep in mind that the prefixes of electronics, kilo, mega, etc., mean times 1000, times 1,000,000, etc.

Now let's put some of that together. Suppose I'm multiplying 47,000 Ω and 250 mA. (My answer will be in millivolts since I'm not changing the milliamps to Amps.) With powers of ten, it's $(4.7 \times 10^4) \times (2.5 \times 10^2)$. It doesn't make any difference what order we multiply numbers in, so we can rearrange to get 4.7 x 2.5 and $10^4 \times 10^2$. 4.7 x 2.5 = 11.75 and $10^4 \times 10^2$ is 10^{4+2} or 10^6. Putting them together, we have 11.75×10^6 mV (11,750,000 millivolts). (Can you change this to volts and kilovolts? The answer is at the bottom of this column.*)

Here are the two simple rules for converting numbers to the power of ten equivalent. Rule 1: Move the decimal point to the right of the extreme left-hand digit (remember, if you see no decimal point, it's at the extreme right, invisible, but definitely there). Rule 2: The exponent is the number of places you moved the decimal point. Note that these rules apply to numbers larger than one. Smaller numbers will be covered in our next installment.

Let's apply those rules. What's the power of ten equivalent of 87,100? Rule 1: 8.71 (we drop unnecessary zeros). Rule 2: 10^4. Put them together, and we have 8.71×10^4. Could you do that one in reverse? Just move the decimal point four places to the right, and you get the number we started off with, and drop the 10 and its exponent.

Finally, let's do a huge computation without units of measurement, just to see what we are now capable of doing, using powers of ten.

$$\frac{41{,}728{,}000 \times 8{,}140 \times 612{,}000{,}000{,}000 \times 89}{241 \times 18{,}360 \times 875{,}000}$$

First, convert to powers of ten:

$$\frac{(4.1728 \times 10^7) \times (8.14 \times 10^3) \times (6.12 \times 10^{11}) \times (8.9 \times 10^1)}{(2.41 \times 10^2) \times (1.836 \times 10^4) \times (8.75 \times 10^5)}$$

Now, rearrange (add exponents):

$$\frac{(4.1728 \times 8.14 \times 6.12 \times 8.9) \times (10^{7+3+11+1})}{(2.41 \times 1.836 \times 8.75) \times (10^{2+4+5})}$$

*11,750 volts or 11.75 kilovolts.

Multiply top and bottom (three-digit accuracy):

$$\frac{1850 \times 10^{22}}{38.7 \times 10^{11}}$$

Now, divide $38.7\overline{)1850}$ and subtract exponents (10^{22-11}) to get our final answer of 47.8×10^{11}, which is 4,780,000,000,000 (remember that the decimal point goes 11 places to the right).

If you followed along this far without too much trouble, you should have little difficulty with the exercise below. Oh, incidentally, we'll be solving that reactance problem posed at the beginning of this section in our next installment, after we've learned how to handle *very small* numbers.

Exercise 2:

(1) Convert these numbers using 10 and exponents:
  (a) 37,700 (b) 64,870,000,000,000,000

(2) Convert these back to our decimal system:
  (a) 3.71×10^9 (b) 29.6×10^1

(3) See if you can work this problem all the way:

$$\frac{248 \times 3{,}214 \times 75{,}000{,}000}{9{,}600{,}000 \times 73}$$

WORK AND ANSWERS TO EXERCISES

Exercise 1:

(1) (a) $\frac{780}{0.085} \times \frac{1000}{1000} = \frac{780{,}000}{85}$

(b) $\frac{35}{0.000090} \times \frac{100{,}000}{100{,}000} = \frac{3{,}500{,}000}{9}$

(2) (a) 0.085 A = 85 mA = 85,000 μA (b) 0.000090 A = 0.09 mA = 90 μA

$90\overline{)35.000}$ = .389 MΩ or 389 kΩ or 389,000 Ω

(3) $85\overline{)780.00}$ = 9.18k or 9,180 Ohms

(4) (a) $21.25\overline{)300} = 2125\overline{)30000.0}$ = 14.1 meters (b) $3825\overline{)300000.0}$ = 78.4 meters

(c) $60\overline{)300000000}$ = 5000000 meters (5,000 km)

That last one's interesting. The wavelength of 60 Hertz house current is thus about the distance from New York to Los Angeles!

Exercise 2:

(1) (a) 3.77×10^4 (b) 6.487×10^{16}

(2) (a) 3,710,000,000 (b) 296

(3) $$\frac{(2.48 \times 10^2) \times (3.214 \times 10^3) \times (7.5 \times 10^7)}{(9.6 \times 10^6) \times (7.3 \times 10^1)}$$

$$= \frac{(2.48 \times 3.214 \times 7.5) \times 10^{2+3+7}}{(9.6 \times 7.3) \times 10^{6+1}}$$

$$= \frac{59.8 \times 10^{12}}{70.1 \times 10^7}$$

$$= 0.85 \times 10^5 \text{ or } 85{,}000$$

Ham Help

Toss me a line!

Up here in the puckerbrush of northern Vermont, there doesn't seem to be too much chance of finding what I need, but here it goes: I need someone to help me get started. Simple? I've been through all phases of CB, SSB, AM, repair, etc., but the urge to work skip and to be able to find a little peace and quiet has always gnawed at my insides. Amateur radio has always interested me. I'm sure I could struggle through the technical portion of the exam, but the code . . .? Won't someone give me a shot of CW and a good kick in the stern to send me on my way?

Joe Vicere
Box 55-A
Upper Notch Road
Bristol VT 05443

I have a problem! I am the proud possessor of a Patterson model PR-15 communications receiver that I am attempting to rebuild. I have no idea where to find any information on this manufacturer, and I need schematics and the service manual for this unit before rebuilding.

E. W. Clede
6811 Spring Forest
San Antonio TX 78249

I need help on two items. The first is a Hallicrafters Super Skyrider, for which I am trying to obtain an operating manual and schematic, or any information on where this information can be obtained.

The second is a DuMont-type 304A scope, for which I need a schematic and/or manual. Also, I could use any information on a 3-14 regulator tube for the above. I would like to convert this tube, since I have not been able to find a replacement this past year.

Neil Van Oost, Jr.
RD #1, Box 301P
Waretown NJ 08758

I really need some help to obtain my Novice license. In my spare time I have studied all the guides, but I have a lot of problems (with which I think a ham class or a ham operator could help me very much). I have a handicap which makes it difficult for me to be a ham — I stutter. I want very much to be a ham, but am afraid to ask any of them. I have the winter and spring off. I am a pipeline worker and also would like any pipeliner who is a ham operator to contact me for the purpose of forming a net after I get my license.

Dale T. Fontaine
2309 So. 22nd St.
Grand Forks ND 58201

I need to contact anyone who was part of a group that set up a ham station on the Isla del Coco, off the coast of Costa Rica, several years ago.

Jere F. Welch
TUSLOG Det-8
Box G
APO NY 09294

Looking *West*

Bill Pasternak WA6ITF
24854-C Newhall Ave.
Newhall CA 91321

I guess I do not have to tell you that we are in a time of change, a time that is going to write new pages in the history book about amateur radio, especially the part dealing with FM relay communication on two meters. There are many of us who feel that there is really no need for more FM repeaters, especially at the expense of already existing activity, and others who feel that nothing is any more important than obtaining a maximum number of such systems in operation regardless of the overall environmental impact. As you are already aware, my feelings on this matter lie someplace in between, leaning more toward no FM repeater expansion into the area between 144.5 and 145.5 MHz. Relay-type communication, yes, but of a type that meets two important criteria. It must be totally compatible with existing narrowband activity and, even more important, it must signify a step forward in communication technology attributable directly to the amateur service. Right now, we need the latter a heck of a lot more than we need more FM repeaters. I'll get back to this later on, but since this is currently a rather emotional subject, let's let it cool for a moment and discuss something that is a close cousin to amateur radio, international shortwave listening – in particular, a station known as Radio Nederland.

In the not-so-long-ago "old days" – the days before solid state and transceivers the size of a loaf of bread – the average station consisted of a separate receiver and transmitter along with the necessary associated goodies. It mattered not if you were involved in HF or VHF; the separate receiver and transmitter combination was the rule rather than the exception. If you were one of the fortunate ones, you owned a "ham-band-only" receiver that gave you the ability to change bands with a minimum of effort. If you were like me and most of my cohorts of the early 1960s, and were involved in a piece of spectrum known as six meters, your state-of-the-art station might have consisted of a Hallicrafters SX-99 receiver, a Techcraft CC-50 converter, and maybe a Globe Scout transmitter. At least that was the gear I used back in Brooklyn at the WA2HVK location.

The SX-99, now long gone, was not only my station receiver, but more. That single conversion black, grey, and silver box opened the whole world to me. It gave me a chance to hear many of the world's people and get to know a bit about them without ever leaving my bedroom. I often wonder how many of today's new hams have ever spent a few hours listening to the spectrum that contains the voices of so many people around the globe or, for that matter, how many even know that such a world exists. In many ways the ham of today with his super-sophisticated ham-band-only station does not realize that he is missing a whole lot. Sure, many of us have that ability because we want it, but I get the feeling that "we" are a minority.

I must admit that for a number of years I fell into the same trap. As I became more and more involved in VHF repeaters in the late sixties, the SX-99 got traded off for some RCA and GE radios and the past was filed away in memory. There were repeaters to build and SSB DX to be worked on six. Time passed quickly and memories began to fade. Then, about six months ago, it happened. I was attending a meeting of the Lockheed Amateur Radio Club in Burbank, and, as luck would have it, it was a night that the club was holding a mini-auction. Among the goodies going on the block was a piece of nostalgia, a general coverage receiver from literally out of my childhood. I had to have it, this S-38D, if for no other reason than as an excuse to reminisce. Twenty dollars and about an hour later, with my grey box under my arm, I was on my way out to the parking lot and en route home. Would it work? Soon I would find out . . .

Radio Nederland QSL, showing Jacob Borenstein, Alfonso Montealegre Moure, and Dick Speekman, producers of Radio Nederland's DX programs: Radio-Atividade (Portuguese), Espacio DX-ista (Spanish), and DX Juke Box (English).

The switches and controls were a bit noisy, but everything lit up . . . Hmmm . . . the Dodgers are winning . . . let's see . . . band 2 . . . 75 is alive though the bfo is not really stable enough to tune in anything . . . it's a good table radio if nothing else . . . band 3 seems OK . . . there's WWV right at . . . err . . . about 5 MHz . . . that carillon sounds familiar . . . wait a minute . . . could that be . . . it was, and the S-38D has sat there ever since. I am once again thankfully hooked on Radio Nederland.

International shortwave broadcasting is the one way that a nation has to bring its thoughts and ideas to the rest of the world's peoples. Virtually every nation on this globe has such an entity operational on a regular or irregular schedule. Many nations use this worldwide broadcast ability simply as another tool in their particular political repertoire, while others have taken to using it to entertain and educate those who listen. Three stations in the latter category stand out in my mind: the Voice of America, the BBC World Service, and Radio Nederland.

Want to know what the top 40 tunes are in Europe? Want to hear no-holds-barred yet tasteful discussions of world problems and possible solutions? Maybe you might want to learn the secrets of better DX SWLing. Radio Nederland offers all that and more. Calling themselves the "Friendly Little Station In Hilversum," they seem to go all out to live up to the reputation that this title entails. Over any given seven-day period, you are bound to run into at least a half a dozen programs that interest you, and soon you will find yourself in front of a typewriter writing a letter to ask about this or that – probably thinking yourself silly writing to a radio station in another country and wondering if they will ever bother to read what you wish to convey. Surprise – they sure do, as I have personally found out. They really care what their audience thinks, and if you write to them, they write back. Send them a reception report, and a QSL like the one pictured comes back. In many ways, Radio Nederland is the epitome of "two-way interactive radio." They are obviously proud of their operation and, after listening a while, that pride will most likely rub off on you. Soon you find yourself more than just a listener, but rather a part of a worldwide community of human beings involved in a listening and learning experience.

It matters not if you are lucky enough to hear a direct transmission from Hilversum or listen as I do via one of their two relay transmitters located in Madagascar and Bonaire. After but a few evenings, I have a feeling that you may find yourself addicted to Radio Nederland – and what you hear can lead to some rather interesting topics for QSOs later on in the evening. This month, "Looking West" salutes the people of that fine "Friendly Little Station In Hilversum" for their ongoing efforts to bring quality and entertainment to DX shortwave broadcasting.

I hope you enjoyed this sidelight to "Looking West" this month; if you want more on this or any other specific topic, let me know. These days there is little difference between the cost of a 40-channel CB radio and a portable shortwave receiver. Some of you may be planning to give your kids a CB set as a Christmas present. Think again. For the same fifty bucks, you can give your kid the world, and that's the kind of gift that will last him or her a lifetime. Now on to FM, repeaters, deregulation and the like.

Don't be complacent. The FCC may have killed 220 MHz Class E CB for now, but the proponents of this service are sure to try again and again to make it a reality. There is money, lots of money, to be made, and don't think they don't know this. There is only one way I know to insure the sanctity of 220 or any amateur band, and that is to populate it so heavily nationally that the FCC would be hard put to attempt to take any sliver away. There is absolutely no excuse for avoiding 220. It's far less crowded than two, there is room in most areas to put a repeater up without much fuss and, most important, the equipment available from both Midland and Clegg is of high quality and reasonably priced. Both the Midland and Clegg radios convert into fine repeaters with little difficulty, and seem to work admirably even in high rf environments. The 220 system I am on was built from just such a radio, and it's been percolating for almost a year without a failure.

In a similar manner, we must also populate six meters and ten meters before someone gets the idea that one of those places would be dandy for their particular interest to acquire. Don't think that six is safe just because of the TVI problems peculiar to that band. If someone wants it, the present low national level of activity could easily justify such a power play. Even worse, one of these days some bright-eyed entrepreneur might realize that six would be an "ideal" (?) place for a new CB-type operation and . . . zap . . . TVI not withstanding . . . four megahertz of "10-4 Good Buddy." Remember, even mass-produced, it's still cheaper to manufacture a six meter radio than a 220 or UHF radio. Ten, six, and 220 . . . use them or lose them!

ELECTRONIC JOURNALISM COMES TO AMATEUR RADIO

"The following is a QST. This is Jim Hendershot in Los Angeles and this is the Westlink Amateur Radio News." By now, many of you have probably heard these words issuing forth from your radio's speaker as your favorite repeater takes a few minutes out to bring you the most important happenings in the amateur world, happenings that affect each of us.

The Westlink Amateur Radio News is produced weekly by the Western

Continued on page 137

The Unbeatable Base-Loaded Three-Element Rotary Vertical

Photos by WA3PTC

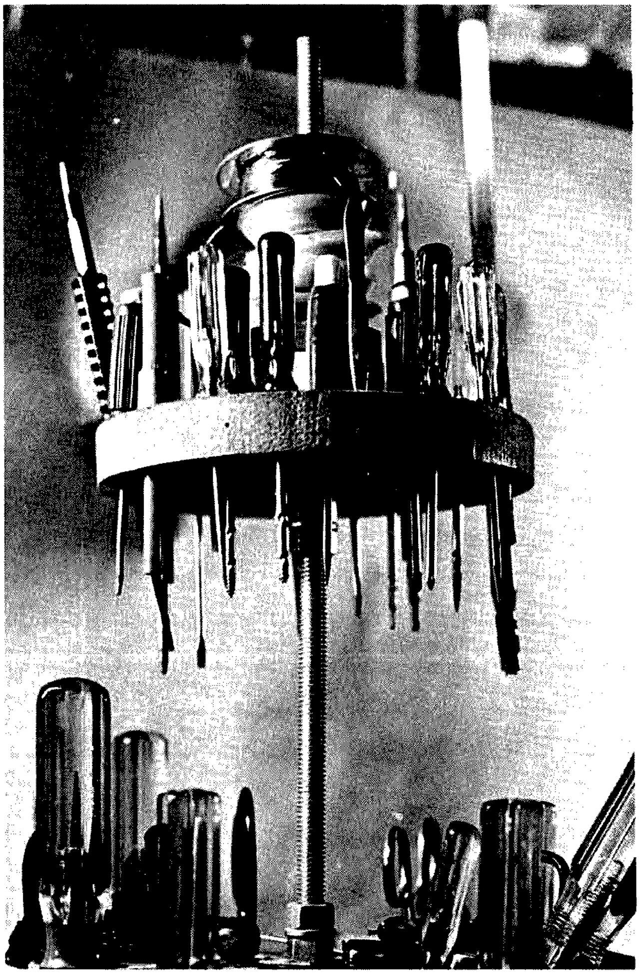

Allan S. Joffe W3KBM
1005 Twining Road
Dresher PA 19025

This masterpiece can be considered truly universal, as any ham, on any band, running any power, with any mode, can obtain a real gain. You all are quite aware of how tricky figures can be, so I will make no comparisons to an isotropic source or even a rock-filled water bucket . . . like most of the good things in life, you build it to see if it works as advertised.

The beautiful part of this project is that there can be no "mail-order lag," and reasonable substitution of materials and design can be made freely . . . within the limits of

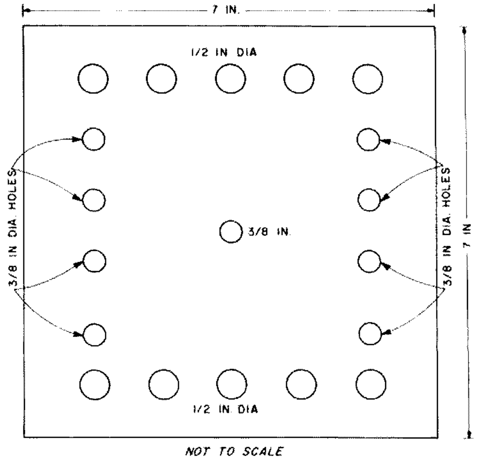

Fig. 1. Bottom and middle elements.

compromising mechanical integrity.

The backbone or boom, if you will, consists of a length of 3/8-inch-diameter threaded rod approximately 20 inches long. Some 14 matching nuts and a half dozen lock washers plus six flat washers make up the bulk of the hardware.

For the purists in the crowd who might be tempted to sneer at the length of the boom, this length seemed to give ideal spacing to the elements to be mounted on the boom. Two of the elements are identical in size, being made of white pine 1 inch thick and seven inches square. These are carefully drilled, as per Fig. 1, to allow for subsequent insertions. While some deviation from this prescribed pattern is permissible (and even encouraged), care should be taken to avoid impedance mutual coupling between the elements to avoid entangling insertions or hindering the desired rotary action.

The third element is made of the same material as the first two, but is made circular, about six inches in diameter, and drilled as per Fig. 2.

The auxiliary base loading is made from a piece of ¼-inch-thick iron plate about six inches on a side. A 3/8-inch hole is drilled dead center to allow passage of the boom, which is locked to the base with suitable nuts and lock washers. It has to be perfectly obvious that the multiplication of the square area of this loading plate by the density of the programmed material will allow considerable loading latitude without producing undue boom tilt.

Fig. 3 shows how it all fits together, with details of how the rotary elements are fixed to the boom so that they retain the capacity to rotate. Put into words, each element has a sandwich of two nuts and a lock washer below it to form a mechanical stop. Then we add a large plain washer to provide the requisite bearing surface. Next, the element goes on the boom and is topped off by another plain washer and the two nuts plus a lock washer to hold the element in place snugly but freely enough to allow for the alluded-to rotary motion in the horizontal plane.

It is obvious that, with such freedom of rotation, any discussion of front-to-back ratios is rather academic. Having suddenly become very aware that the English language has the capacity to lead one astray, let me say, in closing, that this tool rack (who said anything about antennas?) is a fine addition to anyone's work bench. ■

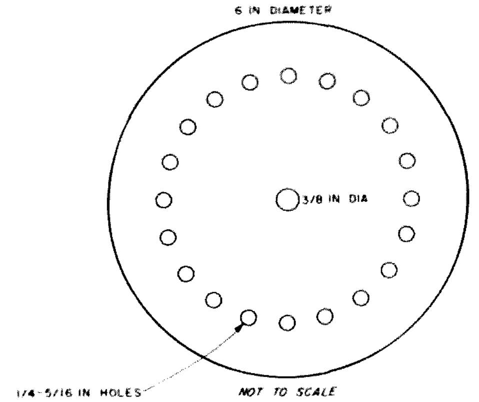

Fig. 2. Top element.

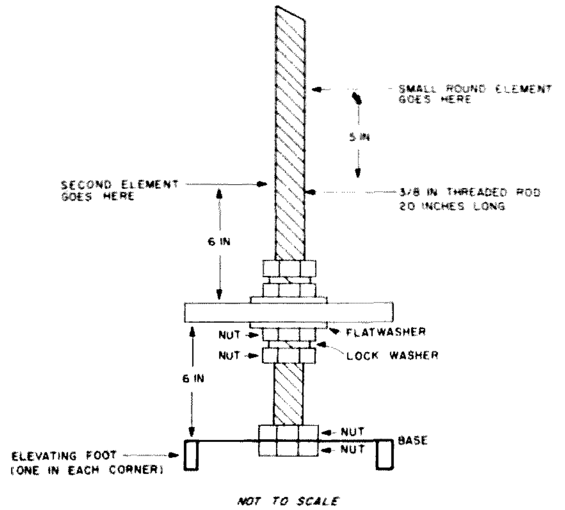

Fig. 3.

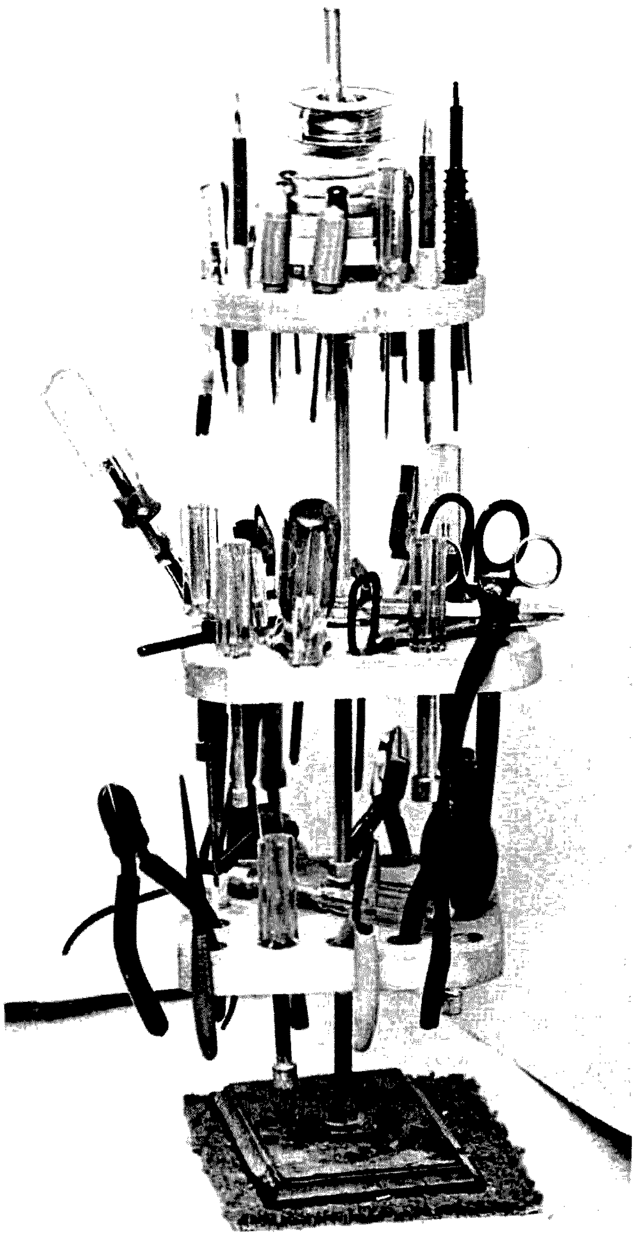

Test Those ICs!

-- what to do when the bug dies

Howard F. Batie W7BBX/4
12002 Cheviot Dr.
Herndon VA 22070

As the number of construction articles proliferates, and the sophistication of the logic chips used in state of the art projects increases, there is a definite need for an integrated circuit tester with much greater flexibility and capability than those commonly found in current literature or available commercially within reasonable cost.

Many IC testers which have been described recently[1,2,3,4] are designed to use either a dedicated IC socket for each IC tested, or some form of hardware programming device to interconnect Vcc, GND, logic in, logic out, and other necessary control signals. Other types of testers commercially available employ multiple-pole slide or rotary switches for programming. Although both approaches are satisfactory for testing a limited number of elementary gates, counters, and flip-flops, the cost to dedicate the very large number of IC sockets or other hardware programming devices necessary to test a great variety of chips generally has been considered too prohibitive; as a result, the testers previously described have a limited number of ICs they can test.

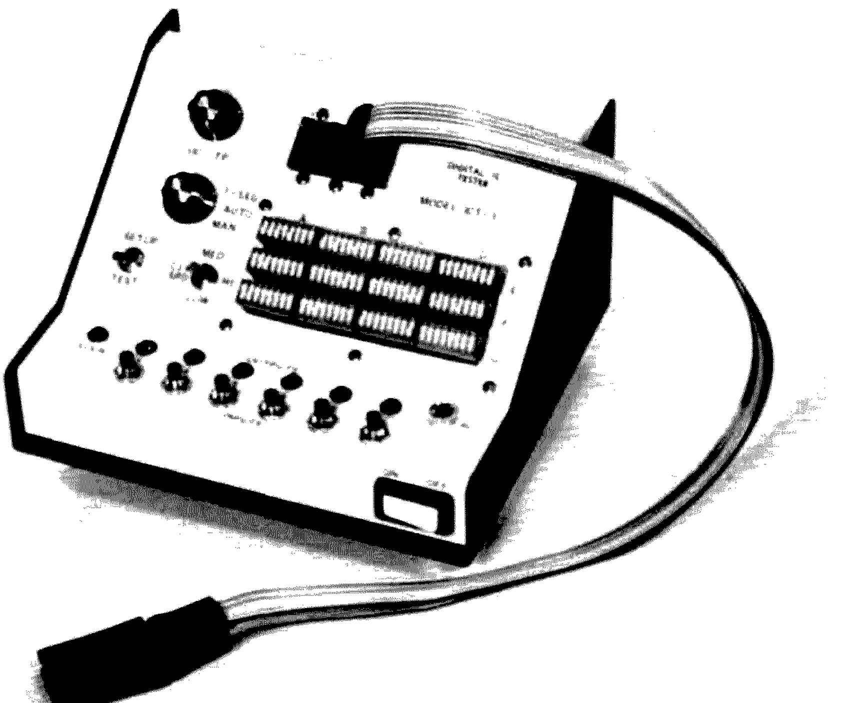

The IC tester described here is capable of testing a very wide range of DTL, TTL, and CMOS digital logic functions, including single and multiple-input gates, inverters and buffers, flip-flops, counters, shift registers, latches, one-shots, pulse synchronizers, multiplexers/encoders, demultiplexers/decoders, arithmetic logic functions, switch debouncers, priority encoders, true/complement elements, parity generators, and many others. Specific TTL and CMOS ICs which are testable are listed in Table 1. Others may be added to the list, but have not been investigated.

Design Considerations

The primary objective of this project was to design a quality tester which maximizes the number and types of digital ICs testable, and to do so with minimum cost. Other design goals achieved were:

- Unit can act as an in-circuit, logic-state monitor
- Tester tests over 450 different TTL digital ICs
- Tests CMOS digital ICs (directly compatible)
- Tests 7400, 74H00, 74L00, 74LS00, and 74S00 series
- Tests open-collector and totem-pole output TTL ICs
- Full CMOS input gate protection
- Internal 3-speed clock
- Vcc applied before any logic signals applied
- Icc monitor provided
- Rapid, easy programming
- Tests both 14- and 16-pin dual in-line packages
- 6 separate logic input and 6 separate logic output lines
- Rapidly tests many ICs of same type by using IC clip
- Each logic output line monitored independently
- Built-in 110 V ac power supply
- +9 V or +12 V dc input capability for portability
- Convenient size, attractive

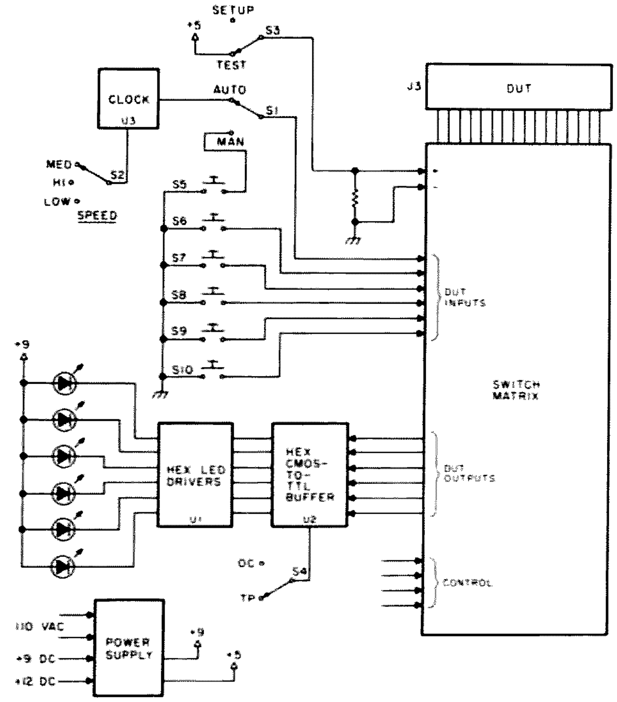

Fig. 1. IC tester functional block diagram.

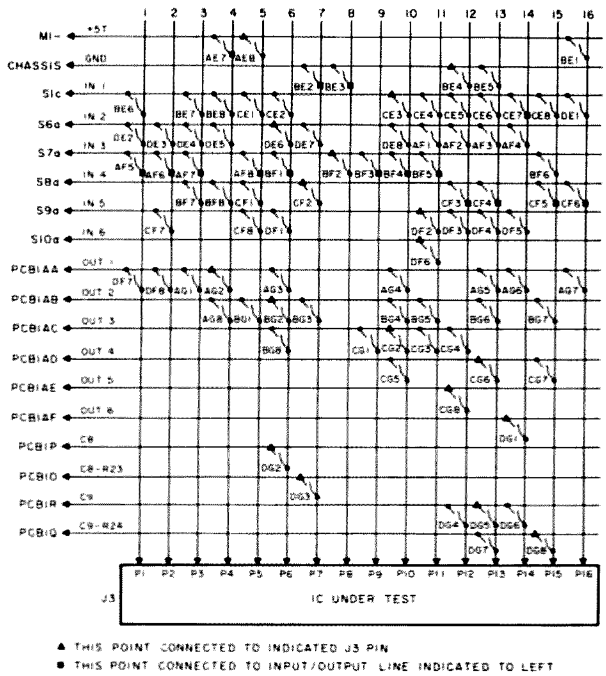

Fig. 2. DIP switch matrix.

TTL (Includes N, H, L, LS & S series of 5400 and 7400 family ICs)
00, 01, 02, 03, 04, 05, 06, 07, 08, 09, 10, 11, 12, 13, 14, 15, 16, 17, 20, 21, 22, 25, 26, 27, 28, 30, 32, 33, 37, 38, 40, 46, 47, 51, 54, 55, 64, 65, 71, 72, 73, 74, 75, 76, 78, 80, 86, 87, 90, 92, 93, 102, 103, 106, 107, 108, 109, 110, 111, 112, 113, 114, 120, 121, 122, 123, 128, 132, 133, 135, 136, 140, 153, 155, 156, 157, 158, 164, 165, 174, 175, 176, 177, 183, 190, 191, 192, 193, 196, 197, 260, 266, 278, 279, 280, 290, 293, 298, 386, 390, 393, 490.

CMOS (4000 family)
00, 01, 02, 03, 04, 05, 06, 07, 08, 09, 10, 11, 12, 13, 14, 15, 16, 17, 18, 19, 20, 21, 22, 23, 24, 25, 26, 27, 28, 30, 31, 33, 37, 40, 41, 42, 49, 50, 66.

Table 1. ICs known to be testable.

case

The above features, and the logical design of the IC tester circuit, were arrived at by seriously examining the required parameters to be tested on the various IC chips. Two basic categories of parameters are normally specified for digital ICs – dynamic and static. Table 2 summarizes the basic differences between static and dynamic testing.

Dynamic parameters of digital logic chips include gate propagation delay, maximum clock toggling frequency, output rise and fall times, and other properties designed into the chip which specify input and output conditions at very high clock input rates. Basically, dynamic testers determine how well the IC works.

Static parameters include the Vcc and Icc required and the fundamental ability of the logic chip outputs to correctly follow the various logic inputs for that chip, according to its respective truth table, i.e., "Does the chip work?"

Since ICs are manufactured to stated minimum and maximum specifications (reflected in their dynamic and static operating parameters), there is a very good degree of assurance that the IC will function properly in a circuit, if its static operation is correct and it is not required to operate above its minimum guaranteed operating frequency or otherwise outside its specified dynamic operating characteristics. The great majority of applications for digital TTL or CMOS ICs do not require near-maximum performance of the chip (except, perhaps, for VHF or UHF prescalers, and gigabit logic applications, where ECL or other newer technologies are used). Therefore, a static tester will be quite adequate, since, if the chip does work correctly, it can be expected to meet at least its minimum dynamic operating characteristics in a particular design application.

Since it is terribly frustrating and time-consuming to either debug a logic circuit prior to getting it working or troubleshoot the circuit to find out why it has stopped working, a few simple quality-control procedures taken before installing the IC can save many headaches later. The easy to perform burn-in process, described later, followed by static testing with the tester detailed below, will give you a very high measure of confidence that the ICs you use

	Static testing	**Dynamic testing**
Type of testing	Functional Truth table compliance Icc (quiescent drive current)	Full parameter Propagation delay Max toggle frequency Noise immunity Min. clock pulse width Fan-out/Fan-in
Clock frequency	Low to medium	Near maximum rated
Complexity	Simple – switches and logic indicators	Very high – normally special-purpose or custom-designed ROM or microprocessor-controlled
Commercial cost	$500 – $1000	$1500 (benchtop) to over $50,000 (production line)

Table 2. Static and dynamic testing comparison.

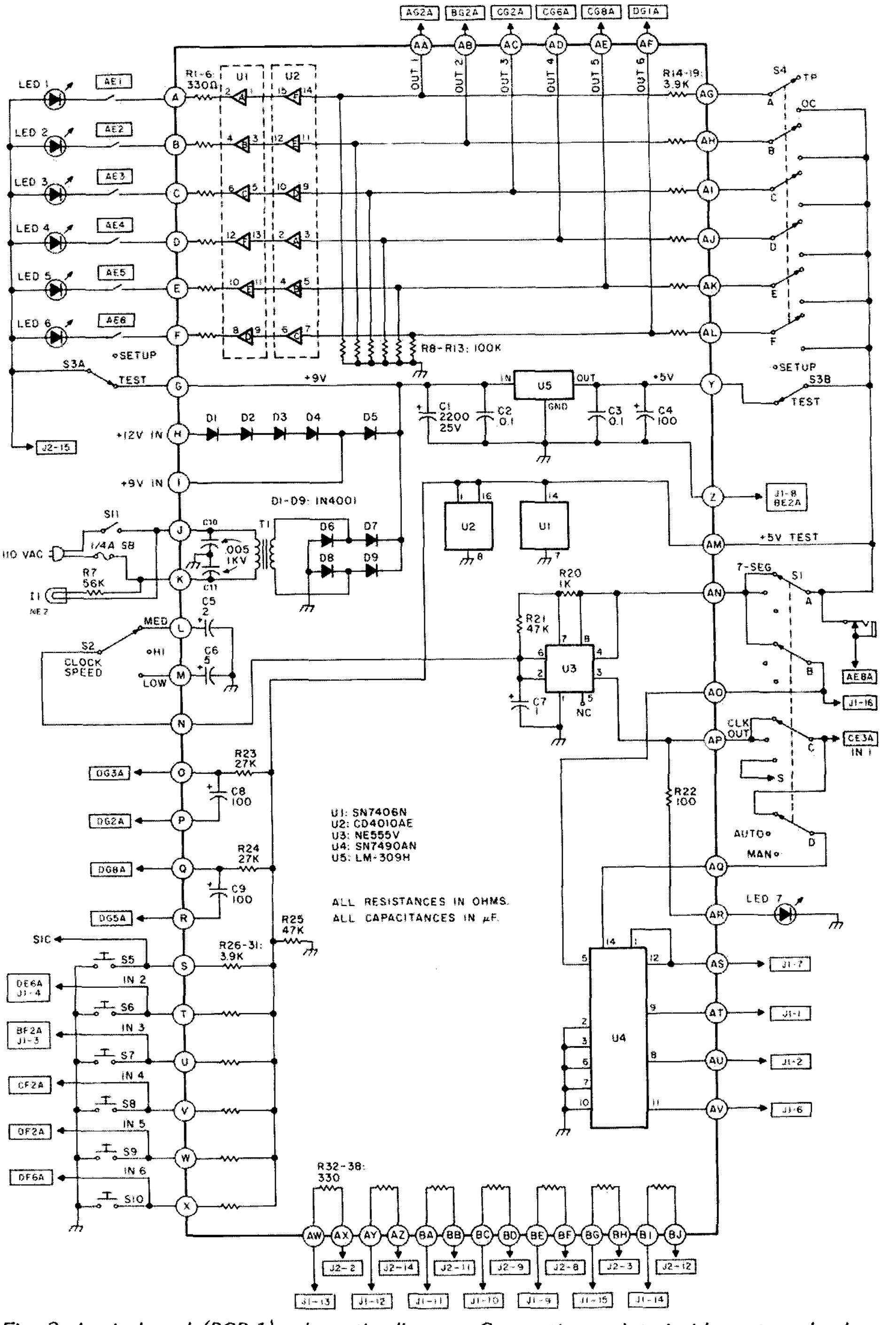

Fig. 3. Logic board (PCB-1) schematic diagram. Connection points inside rectangular boxes refer to external jacks (J1-6 = pin 6 of jack J1) or PCB-2 switch matrix connection points (DF6A = pin A of DIP switch DF6). N.B. Insulate jack from chassis.

are good when you install them and that they will remain in working condition for many, many years, if not subsequently damaged electrically or physically.

Circuit Description

The function block diagram for the IC tester is shown in Fig. 1. Each pin of the device under test (DUT) is interconnected by the switching matrix, as required for the particular IC tested, to +Vcc, GND, up to 6 logic input and 6 logic output lines, as well as 4 other signal lines. One side of the matrix has a line for each of the 16 pins, and the other matrix side connects to the input and output circuits and controls.

Many switch matrix alternatives were evaluated in terms of cost, physical size, and switch capacity required. The 20 x 20 pin-plug matrix board was discarded as both too bulky and costly. A programmable solid state switching array was found to be possible, but not practical, in terms of components and supply current required. A miniature jack and jumper pin matrix suffers the same problems as the plug-pin matrix and, additionally, introduces the requirement to store many jumper wires. Matrix cost and size were minimized by using an array of twelve 16-pin DIP switches, each containing eight SPST rocker switches. However, with only 96 switches available, they must be utilized to the very best advantage to interconnect the inputs and outputs of those ICs most likely to be tested.

The particular matrix

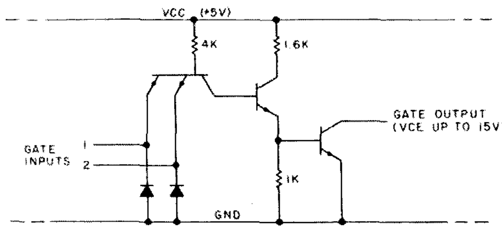

Fig. 4. Open-collector output gate (¼ SN7438N).

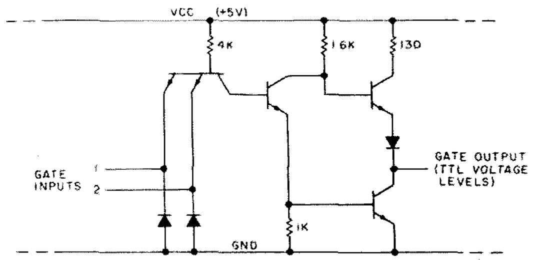

Fig. 5. Totem-pole output gate (¼ SN7400N).

organization, shown in Fig. 2, was painstakingly selected to allow the maximum number of ICs to be tested with a convenient number of DIP switches. If desired, additional DIP switches can be added to increase the number of matrix crosspoints interconnected, consistent with the panel space available. Although it is apparent that many matrix crosspoints are not provided an interconnection by one of the switches, with only a very few exceptions, all input and output logic lines for the ICs listed in Table 1 are testable with this matrix arrangement. For those ICs having more than 6 input or output lines (e.g., an 8-bit multiplexer), the DIP switch matrix can easily be reprogrammed to test those logic lines not tested with a single DIP switch setup.

Input logic signals to the DUT are generated by depressing the correct combination of push-button switches, in conformance with the logic input requirements specified in the truth table – up = logic 1, down = logic 0. In addition, an internal clock can be supplied as a logic input signal for input #1, and fed through the switch matrix to the selected input pin of the DUT. Three clock speeds have been incorporated – a slow speed (1 Hz) for monitoring latching operations, a medium speed (3 Hz) for toggling most gates, and a high speed (10 Hz) for clocking multi-bit counters, shift registers, etc.

The +5 V Vcc (Vcc and Vdd for CMOS), GND, and other input signal lines are also connected to the proper pins of the DUT, via the switch matrix. Monostable multivibrators (e.g., 74121, 84122, 74123) require timing resistors and capacitors for proper operation; these are R23, C8, R24, and C9 in Fig. 3, and have been selected to give approximately a ½-1 second low-high-low indication at the respective output monitor.

Output logic states of the DUT are led from the switch matrix, through a hex CMOS-to-TTL buffer, to individual LED drivers for display. A high output logic level (logic 1) from the DUT lights the LED, and a low output logic level (logic 0) is indicated by an unlit LED. Unused output LED indicators remain unlit.

During setup, S4 is placed into either the OC or TP position, depending on whether the DUT is of the open-collector or totem-pole output variety. This action connects or disconnects a pull-up resistor to each logic output pin of the DUT. The pull-up resistors are required only for open-collector ICs, since the output transistor collector is uncommitted (Fig. 4) for high-voltage or high-current applications, whereas the totem-pole output transistor collector is connected internally to another transistor (Fig. 5) to provide direct TTL output levels without the requirement for an external pull-up resistor.

Power Supply

A conventional full-wave rectifier bridge (D6-D9) and a +5 V regulator (U5) are included to power all logic circuitry, as well as the DUT. A separate +9 V/+12 V dc input jack may be installed by those desiring complete portability. The external battery supply voltage is dropped to about +8 V by D1-D4, to reduce the voltage drop across and, hence, the amount of heat dissipated by U5. The diodes also provide battery polarity protection. The +5 V supply line powers the DUT and the tester circuitry only when S3 is in the TEST position; this prevents inadvertent application of input logic levels prior to application of Vcc to the DUT, since the input logic levels are themselves derived from the same +5 V line. With S3 in the SETUP position, all input, output, and Vcc lines to the DUT socket are returned to ground. An optional 0-100 milliammeter can be inserted in the Vcc line to the DUT to monitor the current required, or the Vcc line can be run to a closed-circuit 3-way jack, to permit external monitoring with your VOM.

7-Segment Decoder-Driver

Special provisions have been included on the logic printed circuit board to allow the popular SN7447A 7-segment decoder-driver to be tested. The output pulse stream from U3 is fed to an internal dedicated BCD counter, U4, and the four binary output lines are led directly to J1. Since this IC socket is dedicated for testing only the 7447A, the input and output lines required can be hardwired to J1 and J2, and a common-anode 7-segment display can be permanently installed at J2. When testing the 7447A, S1 is set to 7-SEG, and J1 is used as the test socket instead of J3. U4, J1, and J2 are optional, but considered very useful, to extend the tester's capabilities to the ubiquitous 7-segment decoder so popular in digital displays, counters, DVMs, etc. The internal BCD counter, which is hardwired to J1, allows the 7-segment

○ = Off
● = On
◑ = Off-on-off
↑ = Up (Steady)
↓ = Down (Steady)
X = Up or Down (Don't care)
ʃ = Release
l = Depress

Table 3. Truth table notation.

TRUTH TABLE	INPUTS 1	INPUTS 2	CLOCK	OUTPUTS 1	OUTPUTS 2	OUTPUTS 3	OUTPUTS 4	TYPE GATE
A		↑	◑	◑	◑	◑	◑	
		↓	◑	●	●	●	●	
B		↑	◑	◑	◑	◑	◑	
		↓	◑	○	○	○	○	
C		↑	◑	●	●	●	●	
		↓	◑	◑	◑	◑	◑	
D	↑	↑		○	○	○	○	
	↓	↑		●	●	●	●	
	↑	↓		●	●	●	●	
	↓	↓		○	○	○	○	

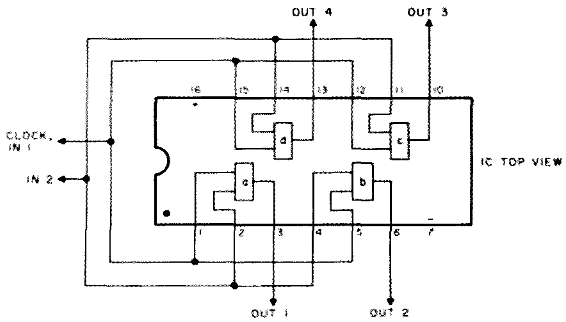

ICs	Settings	Truth table
7400, 74H00, 74L00, 74LS00, 74S00	auto TP	A
74H01	auto OC	A
7403, 74L03, 74LS03, 74S03	auto OC	A
7408, 74LS08	auto TP	B
7409, 74LS09	auto OC	B
7426	auto TP	A
7432, 74LS32	auto TP	C
7438, 74LS38	auto OC	A
7486, 74LS86, 74S86	man TP	D
74132, 74S132	auto TP	A
74136, 74LS136	man OC	D

Matrix: AE1, AE2, AE3, AE4, BE1, BE2, BE6, CE1, CE5, CE8, DE3, DE5, AF1, AF4, AG1, BG2, CG2, CG6.

Fig. 6. Sample truth table. See Table 3 for explanation of notations.

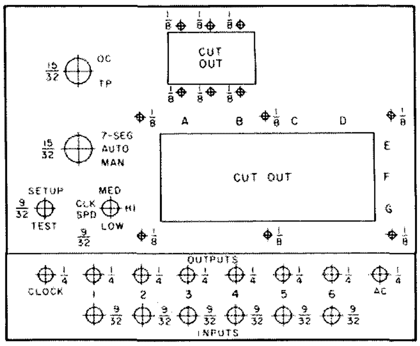

Fig. 7. Front panel.

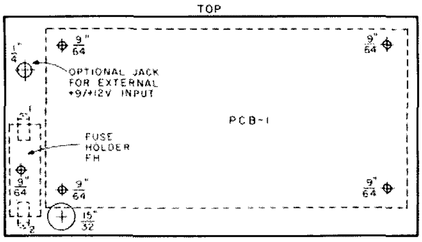

Fig. 8. Rear panel.

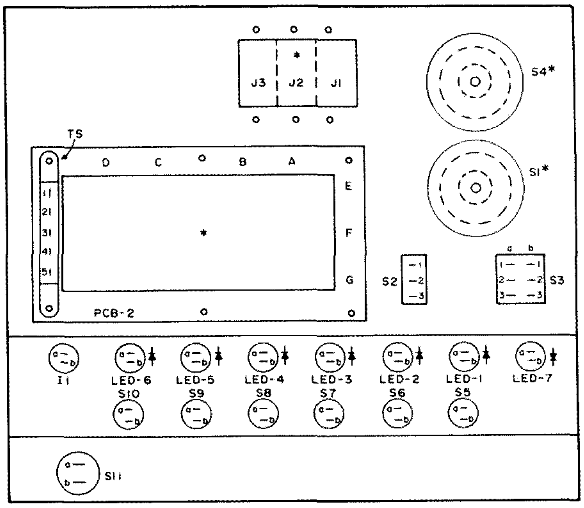

*Fig. 9. Front panel interior parts placement. *See Fig. 10.*

display to cycle through all numerals 0-9 continuously. Additionally, the "all segments on" and "all segments off" tests can be performed on the 7447A under test.

Construction

The LMB 007-746 sloping panel cabinet, shown in the photograph, was selected since it is both attractive and conforms to the physical layout requirements of the panel controls. The entire logic circuitry, shown in Fig. 3, including the power transformer, is implemented on a single PC board, and the DIP switch matrix is on a second PC board. Thus, there are no components external to the PC boards except the required controls, LEDs, jacks, and switches. The switch matrix board (PCB-2) is wired (wire-wrap or point-to-point) prior to installation, to reduce interconnection time required between it, the main logic board (PCB-1), and the panel controls. The use of IC sockets on PCB-2 permits the DIP switches to be removed temporarily for other uses, if desired. PCB-1 is laid out to accept IC sockets for each IC, although the use of sockets is not mandatory. Ribbon cable is used to interconnect the PCBs and controls, although a combination of wire-wrap and point-to-point wiring can be used, if desired.

A significant measure of flexibility can be added to the tester by using an IC clip and ribbon cable which connects to J3. This permits very rapid testing of many ICs of the same type, and also greatly extends the lifetime of J3. Either 14- or 16-pin ICs can be tested directly, since the DIP switch matrix programming accounts for pinout differences as long as pin 1 of the IC clip lead (or J3) is always connected to pin 1 of the 14- or 16-pin DUT when testing.

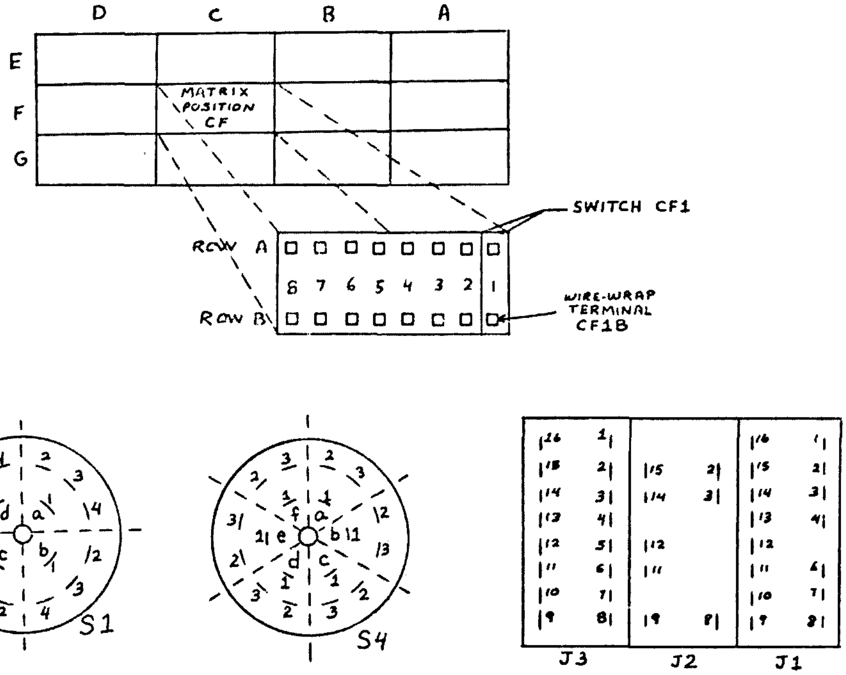

Fig. 10. Expanded views of matrix, S1, S4, and J1-J3.

Operation of the IC Tester

Due to the wide variety of IC functional pinouts, it is necessary to set up the DIP switch matrix to interconnect the input/output signal lines to the proper IC pins for each different functional pinout, but not necessarily for each different IC. For example, Fig. 6 shows a sample truth table page, which can be used for testing many IC types. There are four related parts to each page — the listing of ICs testable by the matrix settings on that page, the matrix settings, the truth table, and, for easy reference, the pinout configuration for each IC listed on that page.

To test an IC (e.g., SN74LS08N), the switch matrix and other required panel controls should be properly set before inserting

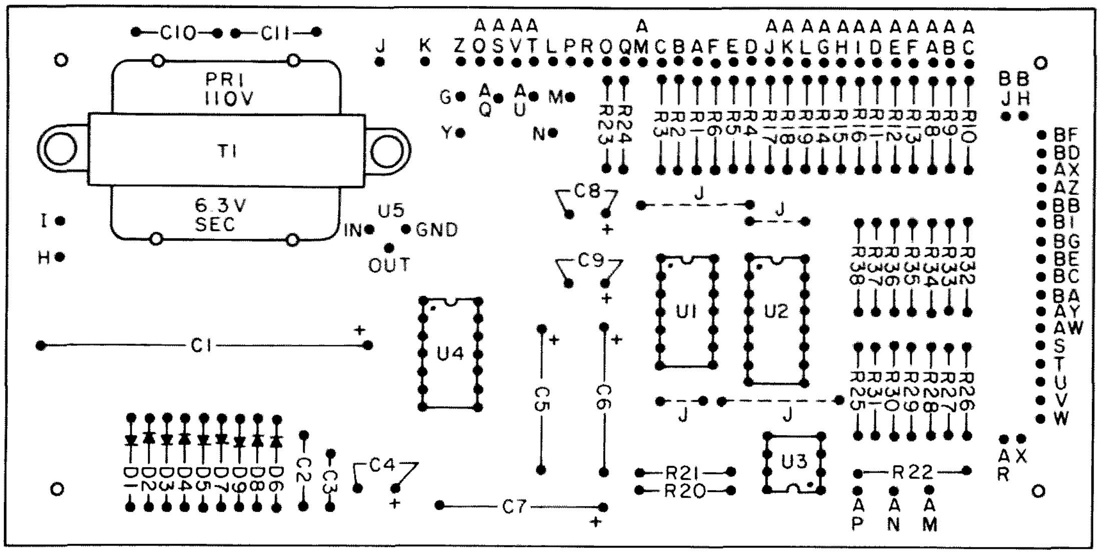

Fig. 11. PCB-1 parts placement.

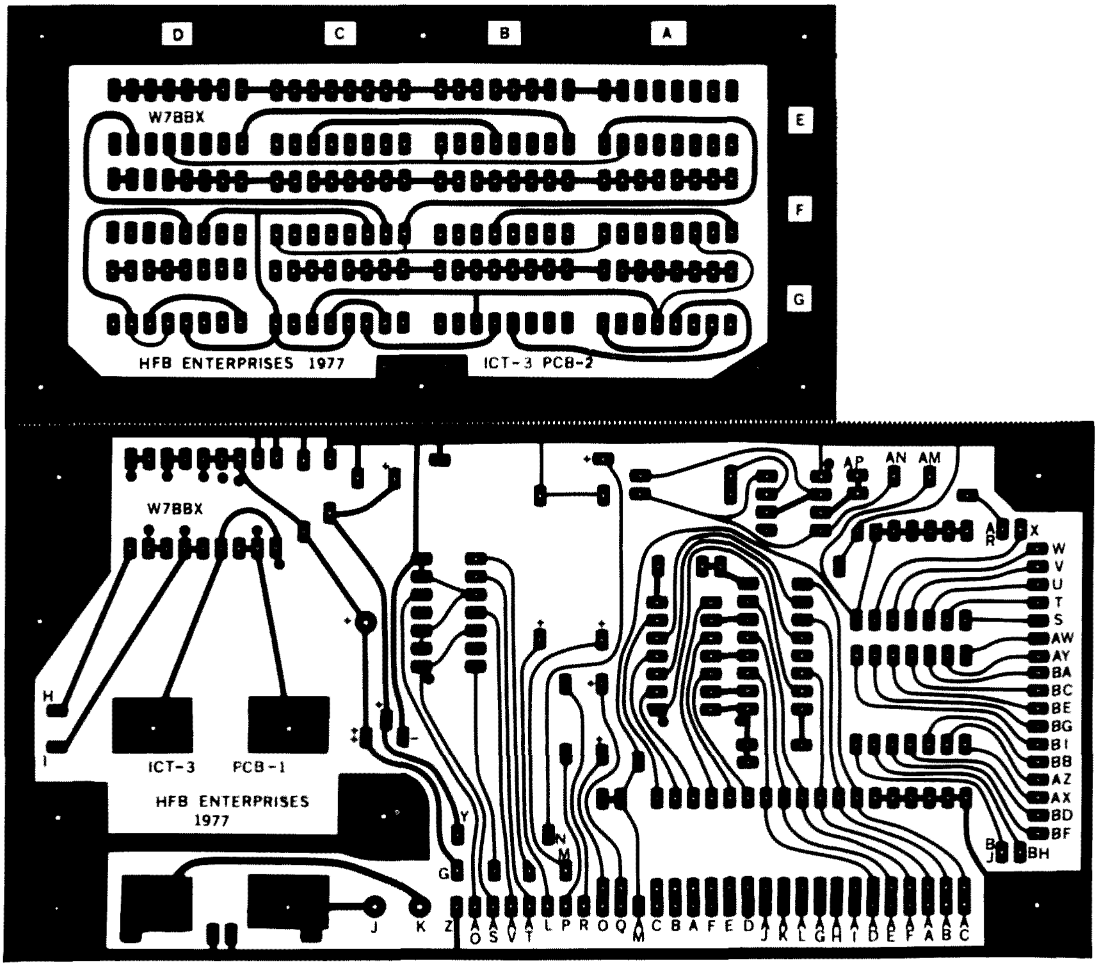

the DUT into J3. S3 is first put into the SETUP position, S4 is set to either OC or TP, and the DIP switch matrix is programmed. S3 is then placed to TEST, and the operations called for in the input portion of the truth table are then performed. Each gate output is monitored separately on (in this case) output LED indicators 1-4. If three outputs agree with the truth tables and the fourth does not, the pinout diagram will tell you how that gate is being tested by which inputs. You may want to remove the pins to and from the defective gate and use the three functional gates later in another application.

To prevent the possibility of damage to the IC under test, return S3 to the SETUP position prior to removing the IC from the test socket or IC clip. No other precautions

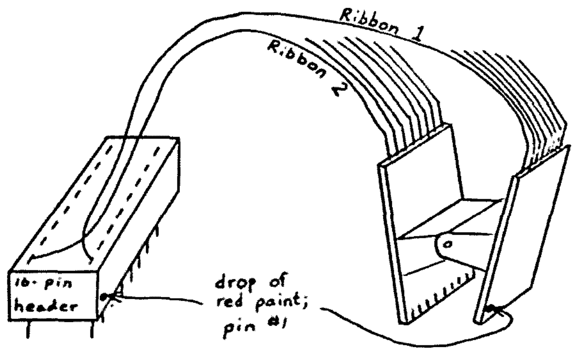

Fig. 12. DIP clip ribbon cable connections.

are necessary to use the tester for CMOS or TTL ICs, except for proper IC handling procedures and ensuring that pin 1 of the IC is always connected to pin 1 of J3.

A very flexible property of this IC tester is that, if equipped with the ribbon cable and IC clip, in-circuit monitoring of up to six logic lines of an operating IC can be done. The only precautions necessary for this type of operation are to ensure a common ground between the IC tester and monitored IC, to remove all Vcc and logic input lines from the tester (by opening the appropriate DIP switches in the matrix), and to place S4 in the TP position. The six output LED monitors, however, can be connected, as desired, by the DIP switch matrix to monitor either input or output lines on the IC. The IC tester uses a CMOS-to-TTL hex buffer in the output monitoring circuit; therefore, loading of the monitored IC, whether TTL or CMOS, is not a problem, since the typical buffer gate input current of 10 pA is low enough to not alter the fan-out of the monitored IC.

IC-QC (Quality Control)

The procedures outlined above will test an IC to determine if it is working now, but cannot guarantee that the IC will not fail 10 minutes from now. Digital ICs are fairly well standardized and spot sample tested prior to shipment by most manufacturers. However, even in "prime quality" lots, a certain percentage may be found which are initially defective or which are prone to failure during the infant mortality period of use (first 48 hours under power). The percentage defective may vary widely between IC types of the same family; for instance, combined initial and infant mortality has been found to be as low as 1 in 200 for the SN7400N, and as high as 1 in 15 for the SN7473N, for the "prime quality" lots tested.

In order to ensure that the ICs used in your projects are good, and will remain good for many years, the easy bake-in and testing sequences which follow are strongly recommended, particularly if IC sockets are not used in your projects. These procedures, while not absolutely foolproof, can identify up to 95% of the faulty or fault-prone ICs for 90% of the common failure modes. ICs passing these tests have a very high probability of a useful lifetime in excess of 20 years, if not subsequently subjected to undue electrical or physical stress.[5]

The procedure is accomplished by temperature-stressing the IC, and then testing its static operation in the tester described. Place the ICs to be tested on a cookie sheet, and bake them in your oven for 15 minutes at 250°F (120°C); remove and place in the coldest freezer you have for 15 minutes; rebake and refreeze a second, third, and fourth time. Finally, bake the ICs at 250°F for 48 hours. After they cool, visually inspect each for casing cracks, and test them on the tester. My experience has been that only about 1-2% of the ICs that tested good before the baking process failed the post-bake-in testing; these were the "failure-prone" ICs, which probably would have failed later in the operating circuit and required troubleshooting of the circuit. ■

Parts List

C3	0.01 uF/25 V disc
C2	0.1 uF/25 V disc
C7	1 uF/10 V axial
C5	2 uF/10 V axial
C6	5 uF/10 V axial
C4, C8, C9	100 uF/10 V radial
C10, C11	.005 uF/1 kV disc
C1	2200 uF/15 V axial
D1-D9 (5*)	1N4001
I1	NE-2
J1-J3 (2*)	16 pin panel mount socket
J4*	RCA phono jack
M1*	0-100 mA meter
LED 1-6	Red LED
LED 7	Green LED
R22	100 Ohm, ¼ W
R1-R6, R32-R38	330 Ohm, ¼ W
R20	1k Ohm, ¼ W
R14-R19, R26-R31	3.9k Ohm, ¼ W
R23, R24	27k Ohm, ¼ W
R21, R25	47k Ohm, ¼ W
R7	56k Ohm, ¼ W
R8-R13	100k Ohm, ¼ W
S1	(Calectro E2-168 or equivalent) 4P3T rot. sh.sw.
S2	(Archer 275-325 or equivalent) SPDT on-off-on switch
S3	(Archer 275-1546 or equivalent) DPDT on-on switch
S4	(Calectro E2-169 or equivalent) 6PDT rot. nsh. sw.
S5-S10	(Archer 275-1547 or equivalent) SPST MC NO PB sw.
S11	(Archer 275-611 or equivalent) SPST on-off rock sw.
T1	(Archer 273-1384)** 6.3 V @ 300 mA transformer
U1	SN7406N
U2	CD4010AE
U3	NE555V
U4*	SN7490AN
U5	LM-309H (7805 is an acceptable substitution)
SPST DIP rocker, 16 pin (12 required)(Grayhill 76B08 or equivalent)	
16-pin wire-wrap IC sockets (13 required) (1*)	
16-pin low profile IC socket (1*)	
14-pin low profile IC sockets (2*)	
8-pin low profile IC socket (1*)	
16-pin DIP clip (Pomona 3916 or equivalent)	
7-segment display (Opcoa SLA-1 or equiv.) (1*)	
Miscellaneous:	
LMB 007-746 sloping panel cabinet	
Ribbon cable (8 or 16 conductor)	
Ac line cord	
Knobs	
Hardware	
Term. strip cinch CJ2005	
Min. 3½ mm 3-wav closed-circuit jack (Calectro F2-844 or equivalent)*	

*optional
**PCB laid out to accept physical size of transformer listed

References

[1] Richard McMahon, "Identify Those Unmarked ICs," *73*, December, 1973, p. 73.

[2] Kenneth H. Leiner, "TTL IC Tester," *Ham Radio*, August, 1976, p. 66.

[3] Silas Smith, "A TTL Tester," *73*, October, 1976, p. 10.

[4] J. S. Worthington, "A Simple TTL Test Panel," *QST*, December, 1976, p. 25.

[5] Lucinda Mattera, "Component Reliability, Part I," *Electronics*, October 2, 1975, p. 91.

PCBs for this tester, along with comprehensive assembly and operating instructions, truth tables, and matrix settings, are available for $15 postpaid (US and Canada) from HFB Enterprises, PO Box 667, Herndon VA 22070.

Mark T. Smith WB6IXT/7
Dept. of Bioengineering
University of Utah
Salt Lake City UT 84112

Negative Numbers On A $9 Calculator

With the proliferation of calculators on the market, coupled with the low prices to which they have sunk, most people have found an excuse to buy one by now. One such reasonably-priced calculator is the Texas Instruments TI-1200, very good for basic math, and at $9 I thought it would be a handy thing to have around the house. After buying one, I found that doing any math involving negative numbers was difficult, as there was no convenient way to enter a negative number from the keyboard. The only excuse for this was, "What do you want for 9 bucks?"

This inconvenience remained until the other night, when out of sheer curiosity I opened up the case of the calculator. My attention was caught by the keyboard arrangement, as the buttons and the rest of the keyboard are not all one unit. The plastic buttons are separate and press down to close contacts on a sealed pad. The contacts in the pad are visible as disk shaped outlines. On close inspection, it appeared that there was one more disk contact in the pad than the number of plastic buttons could account for. This set of contacts is normally situated right under the gap in the keyboard which is between the "clear" and "%" keys. Fig. 1 points to these areas on the keyboard and contact pad.

It turns out that this extra set of contacts is for a change of sign key. When depressed, it will put a negative sign, or take it away from, in front of any number about to be keyed into the display or already on it. When any number is made negative (or positive) in this way, it will behave in any calculations as a negative (or positive) number should, with the answer on the display being appropriately positive or negative. No regular functions of the calculator are altered.

Any sort of button assembly can be improvised and mounted in the gap on the keyboard to be able to push on the set of contacts in the pad. The calculator is much more versatile this way, although you may not wish to add the button until the warranty has expired. But even so, this makes a cheap, handy little calculator even handier. ■

Fig. 1.

Think You Understand SSB?

-- after this, you should!

W. Edmund Hood W2FEZ
116 W. Park St.
Albion NY 14411

Suppressed carrier, single sideband transmission has so completely overtaken amateur radiotelephony on the lower frequency bands that AM signals are a rarity. In fact, many stations aren't even equipped to tune in an AM signal. The advantages of single sideband are well worth the trouble of acquiring the more precise and complex equipment needed to produce and properly receive these signals. It does, however, burden the Novice with having to learn much more today than he might have needed twenty years ago, in order to reach an average level of understanding in the communications art.

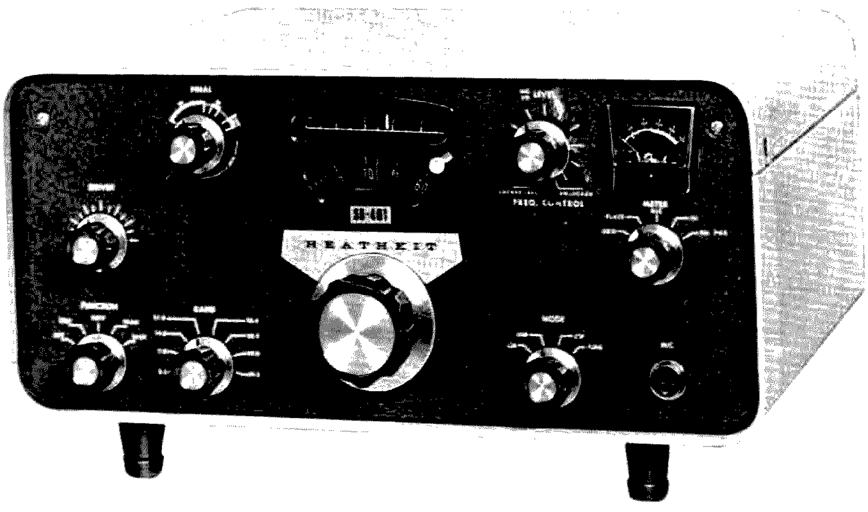

This popular amateur transmitter uses tubes all the way through, rather than solid state. Nonetheless, it serves as an excellent example of an SSB transmitter using the filter method to generate an SSB signal. Although presently superseded by solid state units, this model is still quite popular, and brings a good price at hamfests and in the want ads. (Photo courtesy of Heathkit.)

When voice modulation of a radio signal was first accomplished, it was believed that the level of the signal was modulated, or caused to vary, at a rate corresponding to the frequency and amplitude of the voice. By the late twenties or early thirties, this had been disproven, although the theory continued to be taught for many years afterward and the term "amplitude modulation" persists to this day. (See Fig. 1.)

The technique for producing an amplitude-modulated signal results in the complex waveform of a carrier and sidebands of which we now know an AM signal is composed. When we dissect an AM signal and examine it component by component, we discover that the carrier remains constant in its level. We also find that a narrow band of spectrum above and below the carrier frequency is

occupied by a rather complex pair of signals resulting from the combination of the carrier with the voice.

When *any* two signals are combined in a nonlinear device, the output of the device usually contains the original two signals and two new signals, whose frequencies are the sum and the difference of the frequencies of the original two signals. For example, if we take a signal at 3.9 MHz and combine it with a 1 kHz signal, we obtain the original two signals *plus* a signal at 3.901 MHz, resulting from the addition of 3.9 MHz and 1 kHz; we also find a signal at 3.899 MHz, resulting from the subtraction of the 3.9 MHz and 1 kHz signals. If we were to attempt to radiate these signals, the 1 kHz would not, of course, radiate, but the other three would. We would have a 3.9 MHz carrier and a sideband at 1 kHz above and below it. This is an AM signal of a 1 kHz tone.

Now, suppose the carrier were eliminated and just the two sidebands transmitted. If we were to insert a carrier at the receiver, it would combine with the 3.899 MHz and 3.901 MHz signals to reproduce the 1 kHz tone. The carrier, then, is not really needed to recover the 1 kHz tone. (See Fig. 2.)

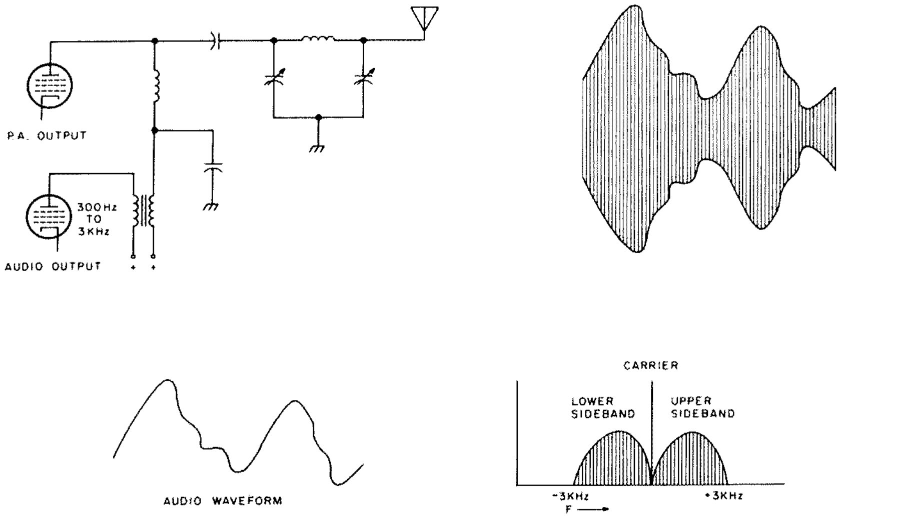

Fig. 1. Here is a typical means of amplitude modulation (upper left). The audio waveform (lower left) is imposed in series with the transmitter's output. Audio power must equal rf power. The waveform at the upper right resulted. It looks as if the amplitude of the rf really was being modulated. A closer analysis, at lower right, proved that the carrier remained constant, while sidebands, representing the audio, appeared above and below the carrier. Sidebands each represent 25% of the transmitter's power, for a total of 50%.

We can also eliminate either one of the sidebands and still recover the 1 kHz tone. Whether we eliminate the upper or the lower is simply a matter of preference. If, instead of the 1 kHz tone, we were using sidebands representing the complex waveform of the human voice, we can, just as long as we insert a carrier at the correct frequency in the receiver, recover the voice. This has two big advantages over an AM signal, and just one small disadvantage. The disadvantage is that the receiver must be very stable and must have an oscillator to generate the carrier. In bygone years, this feature only existed in the more expensive shortwave receivers. The advantages greatly outweigh this one disadvantage.

When an AM signal is transmitted, the overall signal would cover a portion of the spectrum 6 kHz or more wide. The transmitter power would be divided, half of it producing the carrier and half of it producing the two sidebands (one quarter of the power to each sideband). Now the carrier doesn't do anything, except help the receiver demodulate the signal. If we get rid of it, we have twice as much power available to transmit the sidebands, which contain all the information in the signal. Now, if we get rid of one of the sidebands, there is that

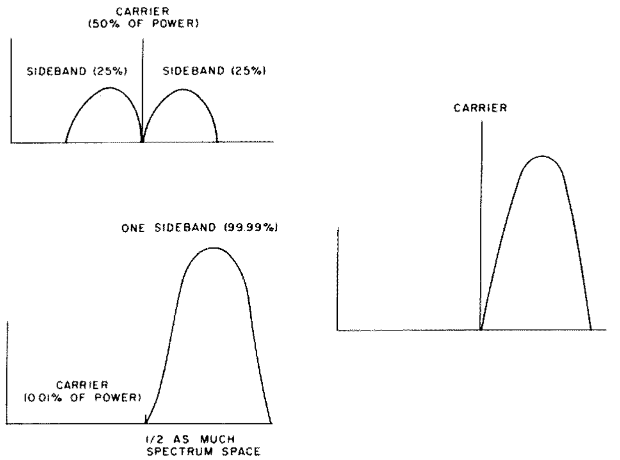

Fig. 2. Instead of transmitting the carrier and both sidebands (upper left), you transmit a single sideband (lower left). At the eceiver, you insert a carrier (right), which allows you to emodulate the signal.

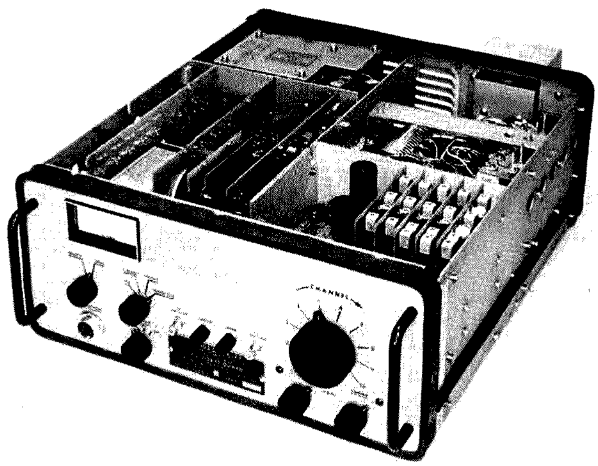

Here is a commercial parallel to the amateur transceiver. It averages about 150 Watts PEP, and has a frequency accuracy of better than 1 part per million, if carefully tuned. It is much more complicated than an amateur unit, since each channel is pretuned. A ten-channel duplex unit has over 150 adjustments in the alignment procedure. (Photo courtesy of Scientific Radio Systems.)

much more power available for the other one. Because of the complex waveform of the sidebands, we only have the effect of two to three times the effective power in the signal, rather than four, as we might have expected.

Then there's the narrower bandwidth. A single sideband signal occupies less than half the spectrum space available to an equivalent AM signal. This makes room for more stations and reduces the amount of atmospheric noise picked up by the receiver.

A suppressed carrier, single sideband signal can be produced by several methods, and most of them produce an equally good end product. It is there, however, that the comparison ends. The phasing method of generating a single sideband signal is so complex that it is seldom used. In fact, I've only seen one amateur rig using this method, and that was produced ten or fifteen years ago by Heathkit.

The most popular method of single sideband generation is called the filter method, and it is this method that I will cover in detail. (See Fig. 4.)

The heart of any single sideband transmitter is a device called a balanced modulator. There are a wide variety of balanced modulator circuits available, some more complex than others, and each one is somebody's favorite. While I don't wish to push one type over the others, I will only cover a sampling here. A balanced modulator, incidentally, is also often used in a receiver to mix the incoming signal with that of the local oscillator to produce the i-f signal.

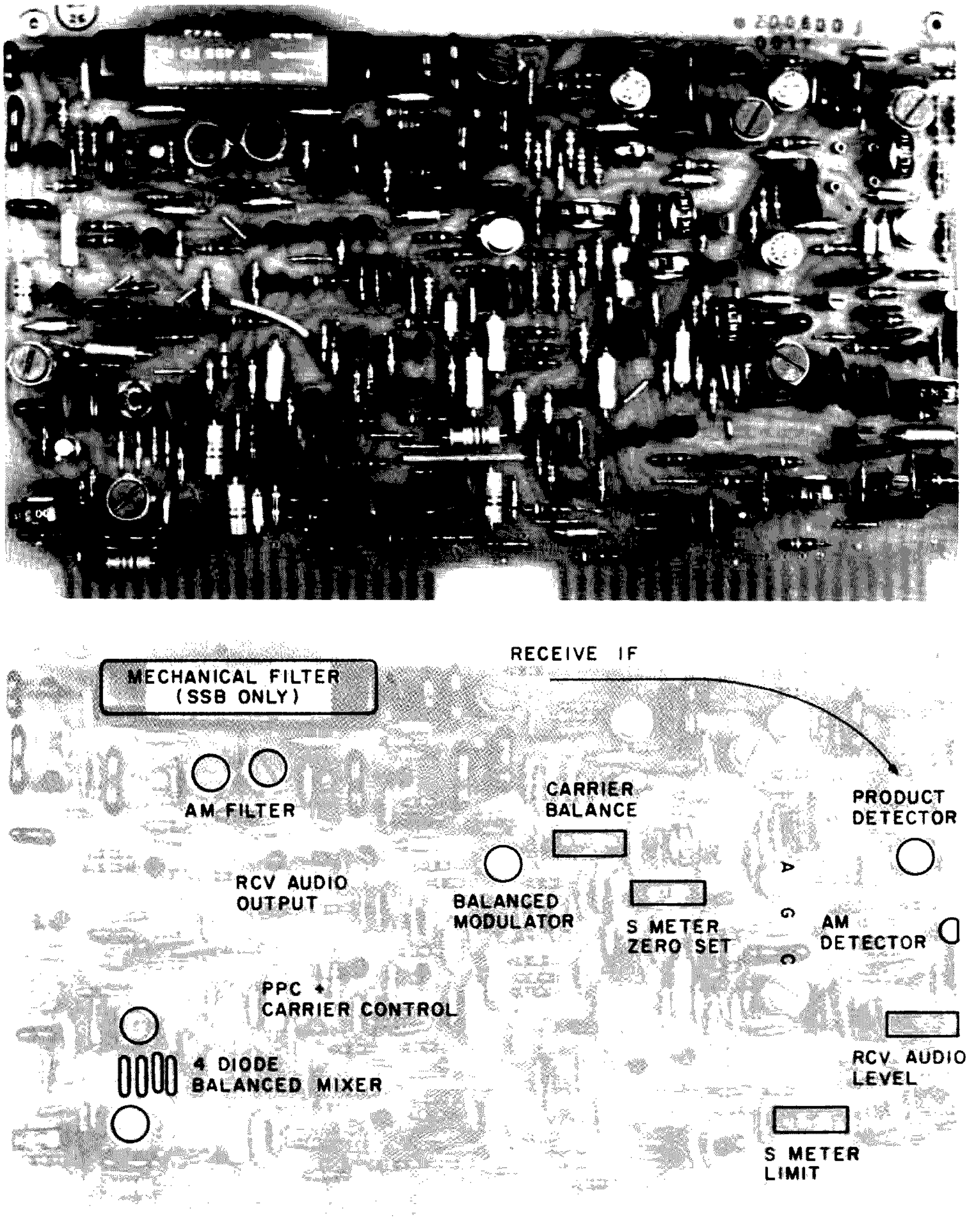

Fig. 3. This PC board is the heart of the commercial SSB transceiver. Note the location of the different circuits, as shown on the diagram. It is, in fact, a complete SSB exciter in itself, except for the oscillators and the final conversion. This board alone retails for several hundred dollars. (Photo by W2FEZ, with permission from Scientific Radio Systems.)

Here is one of the easier to understand balanced modulator circuits. (See Fig. 5.) Note that the audio is fed to the two transistors in a push-pull arrangement. The carrier, however, is fed to the transistors in parallel. At the output, the carrier is of the same amplitude and polarity at opposite ends of the winding. Thus it cancels itself out, leaving only the two sidebands. Any small amount of carrier that gets by, due to unequal characteristics of the transistors, is eliminated by adjusting the balancing potentiometer.

The four-diode ring modulator circuit needs no balancing potentiometer, so long as the diodes are well matched in their characteristics. (See Fig. 6.) Its operation is a bit more difficult to explain, but it operates by being thrown in and out of balance by the audio signal. It enjoys its greatest popularity as a radio frequency mixer circuit. The two transformers are broadband toroids, and, in receivers employing this circuit, they are small enough to fit on your fingernail.

The two-diode balanced modulator is an easy one to make and often represents the best compromise in simplicity and efficiency. (See Fig. 7.) Any of the above circuits have carrier suppression of 50 dB or better, when properly built and balanced. They are not, by any means, the only balanced modulator circuits in use, but are representative of a very wide variety.

A balanced modulator, whichever circuit is used, produces the two sidebands characteristic of an AM signal, but no carrier. This brings us halfway to our goal. Now we must eliminate one of the sidebands. This is done with a very selective filter, hence the name "filter

method." Two kinds of filters enjoy great popularity in this application. One is made using quartz crystals of the proper frequencies, connected in a lattice or similar arrangement. (See Fig. 8.) The other consists of two magnetic transducers, and a number of mechanically resonant discs. Mechanical filters, generally made by Collins, are more popular in commercial systems and in the more expensive amateur transmitters.

Whichever type of filter is used, it must pass a band of frequencies about 3 kHz wide and must reject all frequencies outside that band, with a very high amount of attenuation. (See Fig. 9.)

The frequency of the radio frequency signal fed into the balanced modulator is selected to be just outside the passband of the filter. The filter passes the desired sideband almost without loss and eliminates the other sideband and any residual carrier. The selection of either the upper or the lower sideband is accomplished by changing the carrier frequency from one side of the filter passband to the other.

Single sideband signals are usually generated at a fairly low frequency and then converted to the desired frequency. This is accomplished by mixing the low frequency signals with one of a higher frequency and then tuning out the unwanted products. In one brand of commercial unit, for example, the signal is originally generated in the neighborhood of 455 kHz and then mixed with a signal close to 1955 kHz. This results in a signal at 1500 kHz and another at 2410 kHz. The 1500 kHz signal is selected and the other rejected by the tuned circuits. This signal is amplified and then mixed with a still higher frequency. If, for example, we wanted the final product at 3.9 MHz, we could obtain it by combining the 1.5 MHz signal with a 5.4 MHz signal. We can note here that, each time we mix and use the difference frequency, rather than the sum, the sidebands invert. That is, the upper sideband would become a lower one and vice versa. It's okay to do it this way, as long as we are aware of this phenomenon.

Once we have the signal converted to the proper frequency, all we have to do is amplify it to the desired power level. Here again, we have to be careful what kind of amplifier we use. Amplifiers are classed according to the way the grid of the tube or the base of the transistor is biased. The most efficient of the radio frequency power amplifiers is biased as class C. This means that the voltage on the grid or the base is set so that current flows only during the peaks of input voltage. This is all right for CW operation, but wouldn't work very well with a single sideband signal due to the distortion that would occur.

A class B amplifier is biased so that current flows only during the positive half of the input cycle.

A class A amplifier is biased so that current flows at all times. It is the least efficient, but produces the least amount of harmonic distortion. Amplifiers biased at class A, class B, or in between are known as linear amplifiers, and this is the only kind that can be used

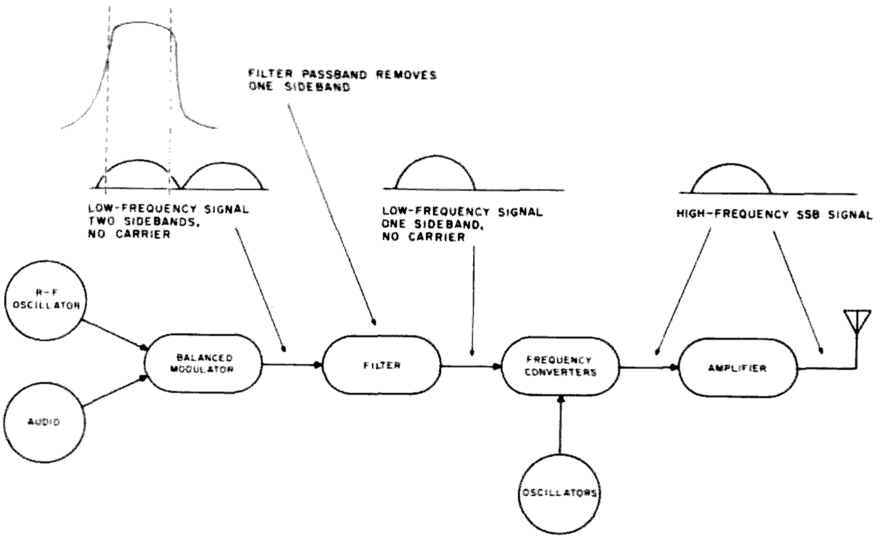

Fig. 4.

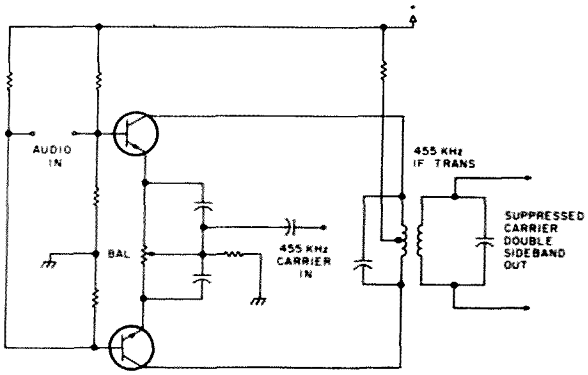

Fig. 5.

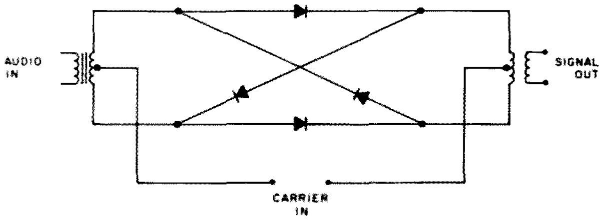

Fig. 6.

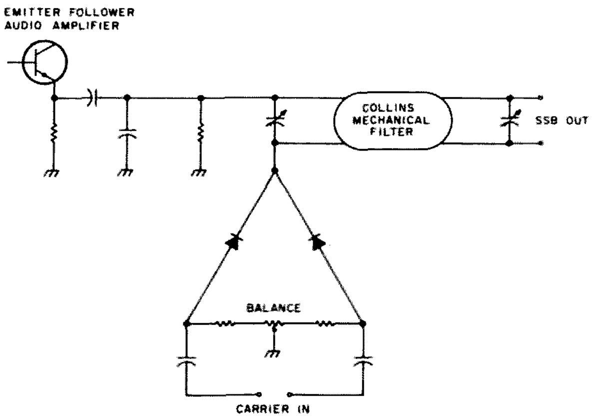

Fig. 7.

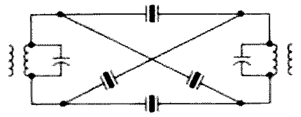

Fig. 8. Basic crystal lattice filter circuit.

when the input signal is already modulated.

The features just described represent the characteristics common to all single sideband transmitters. If you understand them, you are more than halfway to a general understanding of the mode. Receivers designed for signals of this type differ from conventional receivers only in that they are more selective than their ancestors, and the detector circuit, instead of being a simple diode, is a balanced mixer. This enables the most efficient demodulation of the signal. Older receivers can receive single sideband signals as long as they have a CW oscillator. It just requires careful tuning and adjustment of the pitch control or the CW oscillator.

The conversion features of a single sideband transmitter make transceiver design the most economical way to go, though not necessarily the most versatile. The carrier oscillator continues to operate in the receive mode, thereby enabling demodulation of the signal, and, since the same conversion oscillators are used in both modes, transmit and receive frequencies are automatically locked together.

When operating single sideband with separate transmitter and receiver, you should remember that very careful tuning is essential. Some transmitters include a feature that produces just enough carrier to enable spotting the frequency on the receiver. With others, you may have to speak into the microphone while fine-tuning the vfo (in the spot mode, not in transmit, please) until the voice sounds natural in the receiver. Do this after having first tuned the receiver to the desired signal.

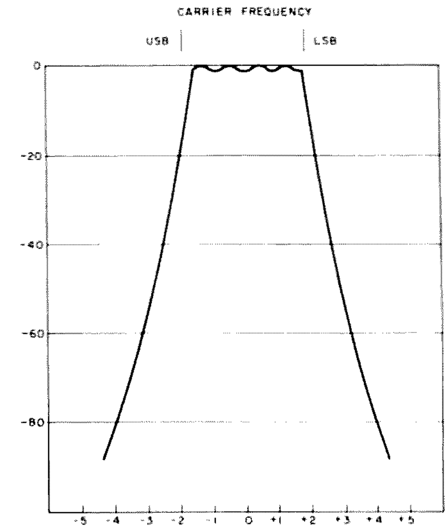

Fig. 9. Typical mechanical filter passband.

Upper sideband is generally preferred on twenty meters and above, while lower sideband is commonly used for forty and below. Other than custom, however, there is no rule dictating which sideband to use. A little practice, and the Novice should very quickly be joining us after he gets that General ticket. This article hasn't covered the entire extent of single sideband operation, but I hope that it has, at least, helped to get the beginner over the hump. ■

IC Timer Review

-- nanoseconds to hours

Howard M. Berlin W3HB
519 Dougfield Rd., Scottfield
Newark DE 19713

This article is an introduction to the various integrated circuit timers that are now available. Although just about everyone is familiar with the popular 555 and 556 "time machines," other lesser known timers, such as the 554, XR-320, XR-2240, LM322, LM3905, 74121, 74122, and 74123, are not so commonly understood.

The 555 and 556 Timers

Created by H. R. Camenzind, the 555 timer is perhaps the best known and most widely used, if not the most versatile. Many articles have been devoted entirely to describing its characteristics and applications,[1-5] and now there is even a book about it.[6]

For those of you who may have been in the dark for the last five years, the 555 timer is a monolithic integrated circuit, capable of monostable one-shot timing periods and astable frequencies, both requiring only a few external components. As shown in Fig. 1, the 8-pin timer can be internally represented by a simplified block diagram. For monostable operation, as

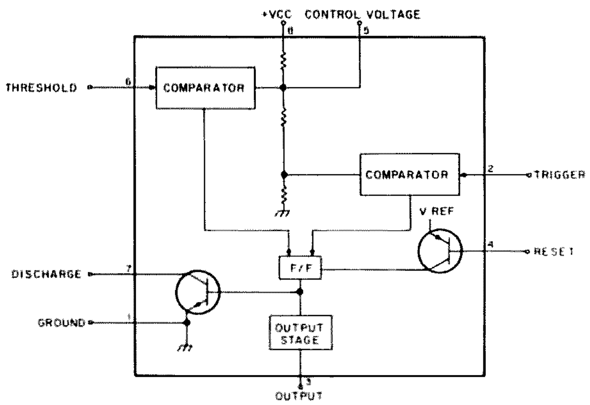

Fig. 1. Functional diagram and pin connections for the 555 timer.

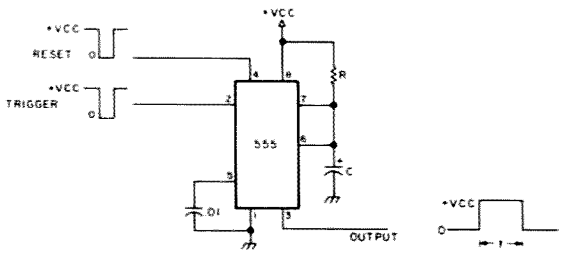

Fig. 2. 555 monostable connected for negative-going trigger pulse with positive output pulse.

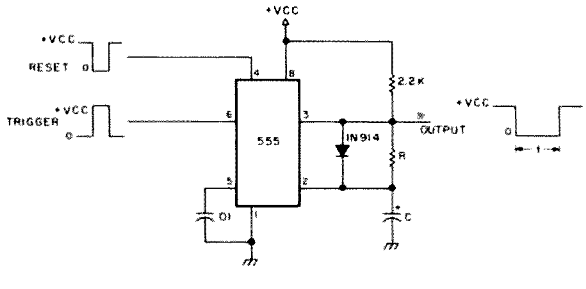

Fig. 3. 555 monostable connected for positive-going trigger pulse with negative output pulse.

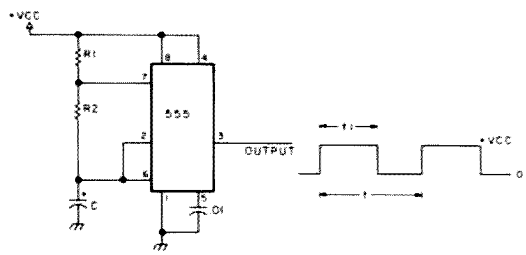

Fig. 4. 555 astable multivibrator.

shown in Fig. 2, the timer is triggered by a *negative-going* pulse to give a *positive* output pulse width, so that: t = 1.1(RC), in seconds.

In addition, the 555 timer may be also wired so that a *positive-going* trigger pulse results in a *negative* output pulse, as shown in Fig. 3. The above equation is still used.[7] The input pulse width, whether positive- or negative-going, must be shorter than the output pulse width.

The reset pin acts as an inhibit. When momentarily grounded, the output immediately returns to its stable state. For the circuit of Fig. 2, the output goes to ground, while the output returns to +Vcc for the circuit of Fig. 3. By externally varying the control voltage (pin 5), the time period can then be made independent of the RC timing network.[6]

For astable operation, the 555 timer is connected, as shown in Fig. 4, to produce a repetitive rectangular output, whose frequency is given by:

$$f = \frac{1.443}{(R_1 + 2R_2)\,C}\ \text{, in Hz}$$

The duty cycle of the rectangular output is the ratio of the time that the output is at +Vcc (high) to the total cycle, given by[6]:

$$\text{duty cycle} = \frac{t_1}{t} \times 100$$

$$= \frac{R_1 + R_2}{R_1 + 2R_2} \times 100.$$

For the circuit of Fig. 4, R_2 has to be much larger than R_1 to obtain nearly a 50% duty cycle. Otherwise, the duty cycle will normally range from 51-99%.

The 556 timer is simply two independent 555 timers in a 14-pin package, as shown in Fig. 5.

The 554 Monostable Timer

The type 554 timer, made by Signetics,[8] is a quad monostable timer in a 16-pin package (Fig. 6), with each section represented by the functional diagram of Fig. 7.

The timer is connected for monostable operation (one section) in Fig. 8, and the output pulse width is given by: t = RC, in seconds.

As with the 555 timer, the negative-going trigger pulse width must be shorter than the output pulse width. As shown in Fig. 9, several 554 timers may be cascaded to give a sequential series of output pulses. It should be noted that, unlike the 555 timer, no coupling capacitors are required, since this timer is *edge-triggered*. In addition, a negative reset pulse simultaneously resets all sections of the 554 timer. The control voltage pin can be used to vary the timer's output period, but all sections are affected simultaneously.

For astable operation, two sections of the timer must be

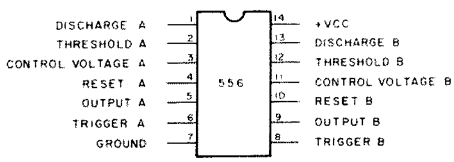

Fig. 5. 556 dual timer.

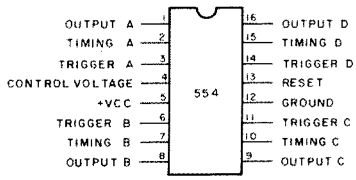

Fig. 6. 554 timer pin connections.

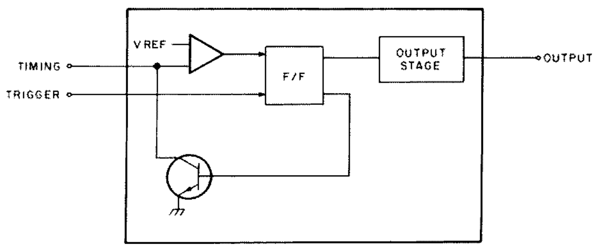

Fig. 7. internal function diagram of the 554 timer.

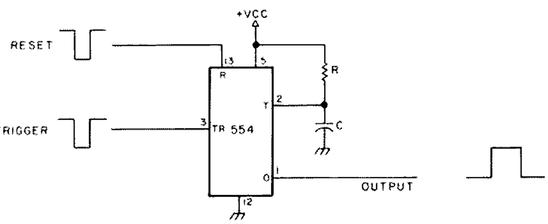

Fig. 8. 554 monostable, connected for negative-going trigger pulse.

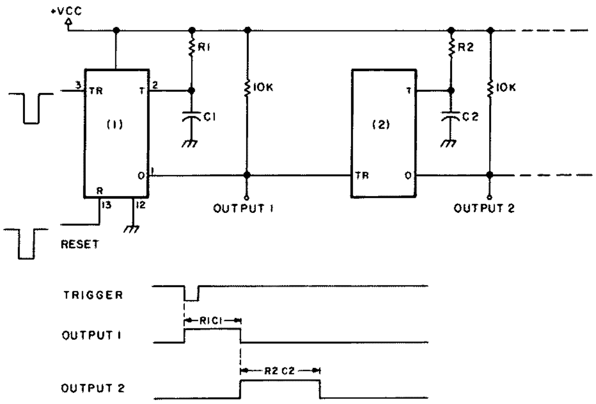

Fig. 9. Sequential output pulses.

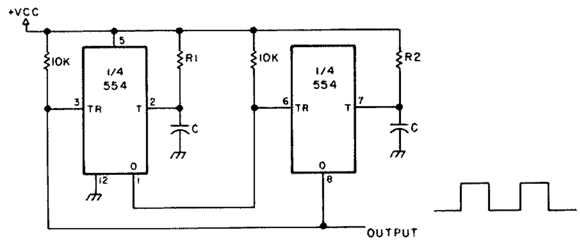

Fig. 10. 554 astable multivibrator.

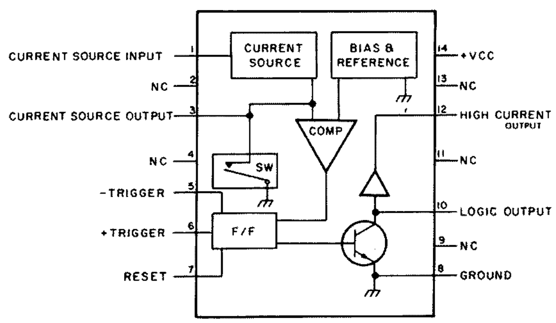

Fig. 11. Functional diagram and pin connections for the XR-320 timer.

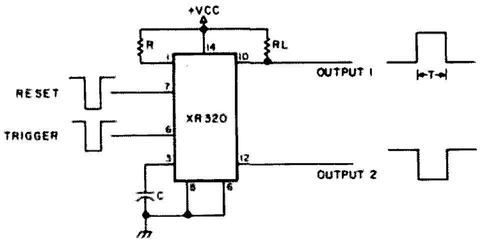

Fig. 12. XR-320 negative-triggered monostable.

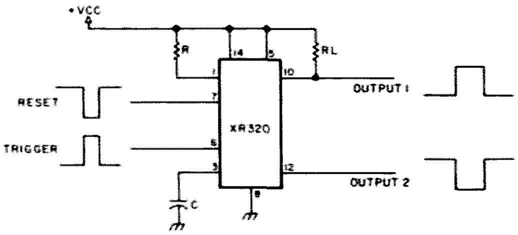

Fig. 13. XR-320 positive-triggered monostable.

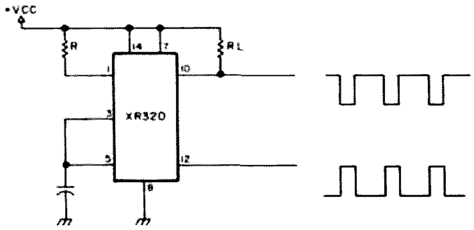

Fig. 14. XR-320 astable multivibrator generates pulses.

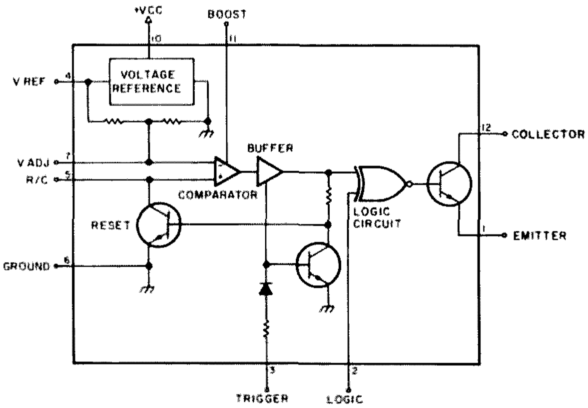

Fig. 15. Functional diagram and pin connections for the LM322 timer.

used, as shown in Fig. 10. The output frequency is given by:

$$f = \frac{1}{(R_1 + R_2)C}, \text{ in Hz.}$$

and the output duty cycle is:

$$\text{duty cycle} = \frac{R_2}{R_1 + R_2} \times 100.$$

Consequently, by making R_1 equal to R_2, a symmetrical square wave is obtained.

The XR-320 Timer

The XR-320 timer, made by Exar,[9] is a single monolithic timing circuit in a 14-pin package (Fig. 11), and can be triggered either by a negative-going pulse (Fig. 12) or a positive-going pulse (Fig. 13). In either case, the input pulse width must be shorter than the output pulse width, given by: t = 2(RC), in seconds.

This timer provides two independent logic outputs – a medium current output (<10 mA) at pin 10, and a high current output (<100 mA) at pin 12. The output at pin 10 is of the "bare collector" type, which requires an external pull-up resistor, R_L, for proper operation.

By using the circuit of Fig. 14, the XR-320 timer will also operate as an astable pulse generator, with either positive or negative pulsed outputs, whose frequency is approximately equal to:

$$f \cong \frac{1}{2(RC)}, \text{ in Hz}$$

The LM322 and LM3905 Timers

The type LM322 timer, made by National Semiconductor,[10] is a single 14-pin package, shown by the functional diagram of Fig. 15. An internal 3.15 V reference is included as part of the timer to reject supply voltage changes and provide a reference for applications other than the basic timer. However, it can only drive loads up to 5 mA. As with the 554 and 555/556 timers, this timer's output period can be externally varied via the V_{ADJ} pin. The emitter and collector outputs of the LM322 can be treated like any transistor whose minimum collector to emitter breakdown voltage is 40 V.

The timer is connected for monostable operation, with a positive output pulse, in Fig. 16. For a negative output pulse, the circuit of Fig. 17 is used. For both circuits, only a positive-going trigger pulse is used, but it may be either shorter or longer than the output pulse width, which is given by: t = RC, in seconds.

Alternatively, if the output is taken from the *emitter output,* R_L is tied from pin 1 to ground, while pin 12 is tied to +Vcc. As with the

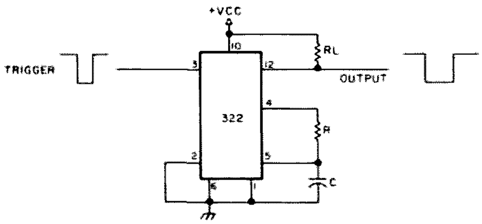

Fig. 17. LM322 timer connected as a negative-triggered monostable with negative output pulse.

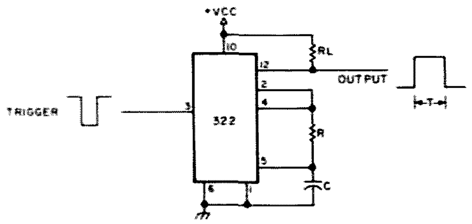

Fig. 16. LM322 timer connected as a negative-triggered monostable with positive output pulse.

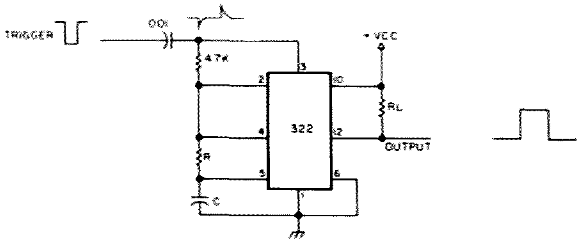

Fig. 18. Triggering with negative edge.

collector output circuits of Figs. 16 and 17, either a positive or negative output pulse width may be obtained during the timing cycle.

The boost terminal (pin 11) is used to increase the speed of the timer's internal comparator, since it is normally operated at low levels of current for the lowest possible input currents. In the unboosted state, timing periods down to 1 ms are obtained. In the boosted state, timing periods of several microseconds are possible. The output pulse may be reset during the timing cycle by momentarily shorting the timing capacitor to ground.

Although this timer is triggered by a positive-going pulse, as shown in Fig. 18, a differentiator tied to a normally high trigger pulse will result in a negative-edge triggered monostable. However, there is a delay in the appearance of the output pulse when the timer is negative-edge triggered, approximately in the range of 0.5 to 1.5 (RC).

As with the 554 timer, several LM322 timers may be cascaded to give a series of sequential output pulses without any coupling capacitors. Fig. 19 is used for collector outputs, and Fig. 20 is used for emitter outputs. Both circuits are triggered by a positive-going pulse.

For astable operation, the circuit of Fig. 21 is used, and the timer's output frequency is:

$$f = \frac{1}{(R_1 + R)C}, \text{ in Hz.}$$

The output is a narrow negative pulse, whose width is approximately: $t_1 \cong 2(R_2C)$, in seconds.

The LM3905 timer is identical to the LM322 timer, except that the boost and V_{ADJ} functions are not available, and the LM3905 comes in an 8-pin package, as shown in Fig. 22.

The 74121 Monostable Timer

The 74121, shown in the pin diagram of Fig. 23, is a 14-pin monostable timer and is probably the most used monostable, after the 555 timer. Unlike the previous ICs already discussed, its supply voltage must be +5 V (±5%).

In Fig. 24, the 74121 functions as a *negative-triggered* monostable. In Fig. 25, it is *positive-triggered.* In both cases, complementary output pulses are available, whose widths are: t = 0.693(RC), in seconds.

Once triggered, the outputs are independent of any

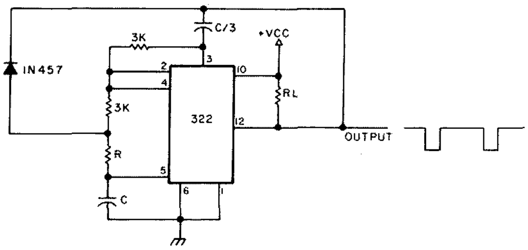

Fig. 21. LM322 timer connected as a pulse generator.

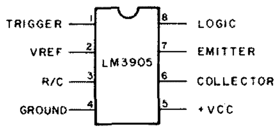

Fig. 22. Pin connections for the LM3905 timer.

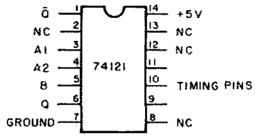

Fig. 23. Pin connections for the 74121 monostable.

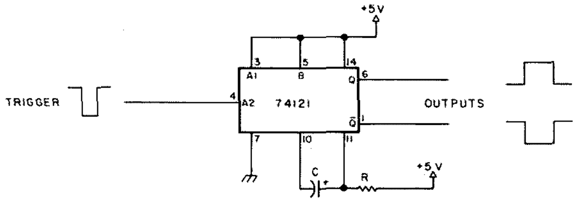

Fig. 24. 74121 monostable connected for negative-triggered output.

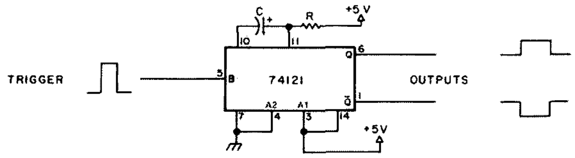

Fig. 25. 74121 monostable connected for positive-triggered operation.

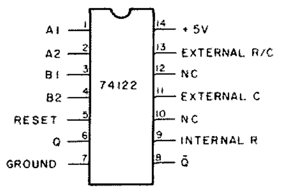

Fig. 26. Retriggerable monostable pin connections.

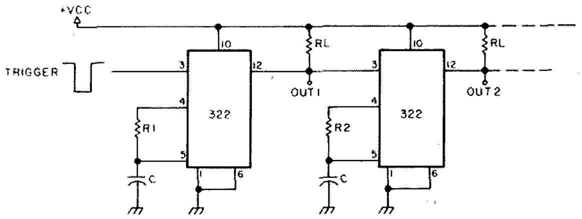

Fig. 19. Sequential output pulses (collector output) with the LM322 timer.

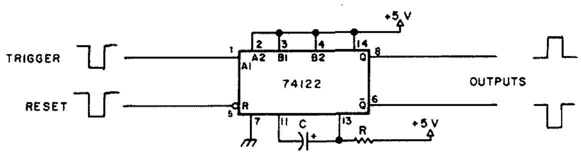

Fig. 27. Negative-triggered monostable.

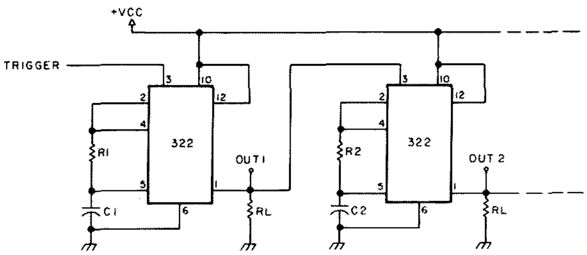

Fig. 20. Sequential output pulses (emitter output) with the LM322 timer.

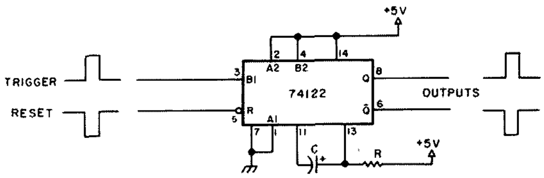

Fig. 28. Positive-triggered monostable.

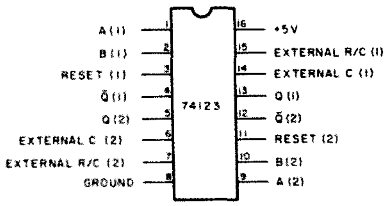

Fig. 29. Pin connections for the 74123 dual-monostable timer.

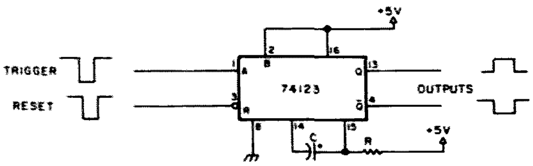

Fig. 30. Negative-triggered monostable (one section).

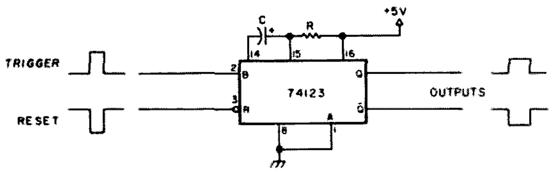

Fig. 31. Positive-triggered monostable (one section).

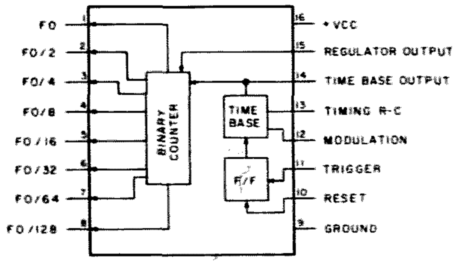

Fig. 32. Pin connections for the XR-2240 programmable timer/counter.

further input changes or transitions during the timing cycle. In addition, the input pulse width may be of any duration.

Since there is an internal resistor of about 2k Ω at pin 9, the 74121 can be operated with only the external timing capacitor by connecting pin 9 to +5 V. Consequently, the output pulse width is: t = 1.386C, in seconds.

Furthermore, if the external capacitor is also omitted, an output pulse width of approximately 30 ns is obtained.

The 74121 is preferred over the 555 timer for monostable periods less than 10 ms; however, the 74121 cannot be retriggered during the timing cycle, and it has no reset function.

The 74122 Monostable Timer

The 74122 TTL monostable timer, shown in Fig. 26, is very similar to the 74121, except that the 74122 is retriggerable and has a reset pin. For a negative-going trigger pulse, the circuit of Fig. 27 is used, while the circuit of Fig. 28 is used for positive-going trigger pulses. The output pulse width is given by:

$$t = 0.32RC \left[1 + \frac{0.7}{R} \right], \text{ in seconds.}$$

Like the 74121, an internal resistor of about 10k Ω at pin 9, when connected to +5 V, permits operation with only an external capacitor, so that the output duration is: t = 3,200C, in seconds.

The 74123 Monostable Timer

The 74123, shown in Fig. 29, is essentially a pair of 74122 TTL monostables in a 16-pin package. For negative-triggering, the circuit of Fig. 30 is used; otherwise, the circuit shown in Fig. 31 is for a positive-going trigger pulse.

The XR-2240 Programmable Timer/Counter

This integrated circuit, made by Exar, is a type of timer entirely different from those already discussed. The major difference is that it is fully programmable. As shown in the simplified diagram of Fig. 32, the XR-2240 features a timebase oscillator, control logic, and an 8-bit binary counter. A good review of its many functions is given in an issue of *Popular Electronics.*[11]

The basic circuit shown in Fig. 33 is used for both monostable and astable operation. With S_1 closed, the circuit functions as a programmable monostable. By connecting appropriate outputs to the "common output" bus, the output pulse width will be a multiple (in binary) of: t = RC, in seconds.

Consequently, with an 8-bit binary counter, we can have time delays ranging from 1 RC to 255 RC. For example, if only pin 6 ($f_o/32$) is connected to the bus, the total output duration will be 32 RC. Similarly, if pins 1 (f_o), 2 ($f_o/2$), 5 ($f_o/16$), and 7 ($f_o/64$) are connected, the total time delay is: t′ = (1 + 2 + 16 + 64)RC = 83RC.

Astable operation is obtained by opening S_1, so that the astable frequency is: f = 1/t, in Hz, where t′ is a multiple of RC from 1 to 255.

Although there are many possible applications for this device,[11,12,13] perhaps the most interesting is that the XR-2240 is capable of frequency synthesis[14] with the circuit of Fig. 34. This circuit can simultaneously multiply the input frequency by a factor of M and divide the input frequency by a factor of N+1, where M and N are selectable integer values. The output frequency is given by:

$$f = f_R \left[\frac{M}{1+N} \right]$$

$$1 \leq M \leq 10$$
$$1 \leq N \leq 255$$

where f_R is the input reference frequency.

When there is no external reference input, the circuit's oscillator has a frequency of: f_S = 1/RC, where the RC combination is connected to pin 13. The output frequency will be:

$$f = f_s \left[\frac{1}{1+N} \right], \text{ in Hz.}$$

Summary

The basic monostable and astable circuits possible with a number of the IC "time machines" have been briefly reviewed. Their specific characteristics are summarized in Table 1.

Since this article is not meant to be a compilation of

Parameter	555/556	XR-2240	XR-320	LM322/LM3905	554	74121	74122/74123	Units
Supply voltage, Vcc	4.5-16	4-15	4.5-20	4.5-20	4.5-16	5	5	V
Supply current	3-10 *	4-13	4-14	2.5	18-22 *	23	23 *	mA
Timing accuracy	1.0	0.5	1.0	0.2 ††	1.0			%
Supply drift	0.1	0.08	0.1	0.005	0.03			%/V
Temperature drift	50	80-200	100	100	150			ppm/°C
Triggering	⊔ | ⊓	⊓	⊔, ⊓	⊔, ⊓	⊔	⊔	⊓, ⊔	
Output	⊓ | ⊔	⊔	⊔, ⊓	⊓, ⊔	⊓	⊓, ⊔	⊓, ⊔	
Reset	⊔	⊓	⊔	⊔	⊔ †	none	⊔	
Timing R	1k-10m	1k-10m	6k-1m	3k-100m	2-100k	2-40k	5-20k	Ω
Timing C	.001-100	.01-1000	.0001-100	.0001-100	- **	≥10 pF	>10 pF	μF
Max. astable freq.	200	130	10	- **	-	-	-	kHz

*Table 1. Typical characteristics as obtained from manufacturers' data sheets. *Each section; ** not known; † all sections simultaneously; †† estimated.*

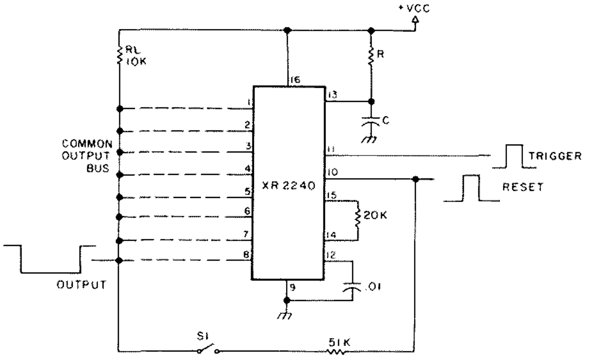

Fig. 33. External connections for the programmable timer/counter. For astable operation, S1 is left open. For monostable operation, it is closed.

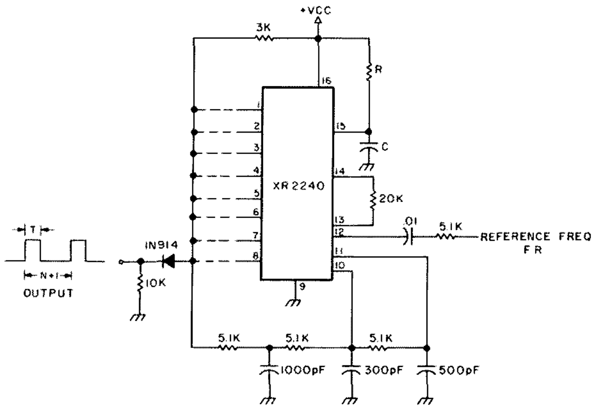

Fig. 34. The use of an XR-2240 programmable timer/counter to give frequency synthesis.

the many techniques and applications that are possible with these timers, but is meant to be a "timer primer," to coin a phrase, I recommend that you obtain application notes from the various manufacturers, in addition to some of the references listed below. ■

References

1. D. Blakeslee W1KLK, "Time-IC Controlled," *QST*, June, 1972, page 36.
2. E. Mooring W3CIX, "Simple Timer," *Ham Radio*, March, 1973, page 38.
3. W. G. Jung, "The IC Time Machine," *Popular Electronics*, November, 1973, page 54.
4. W. W. Schopp, "Versatile IC Timer," *Popular Electronics*, July, 1973, page 98.
5. R. F. Scott, "555 Timer IC Applications," *Radio-Electronics*, Part I — February, 1976, page 40; Part II — March, 1976, page 62; Part III — September, 1976, page 63.
6. H. M. Berlin K3NEZ, *The 555 Timer Applications Sourcebook with Experiments*, E&L Instruments, Derby CT, 1976 (available from *Ham Radio* Books, Greenville, New Hampshire 03048).
7. W. G. Jung, "555 One-Shot Circuit Features Negative Output with Positive Triggering," *Electronic Design*, August 16, 1976, page 98.
8. Signetics Corporation, 811 East Arques Avenue, Sunnyvale CA 94086.
9. Exar Integrated Systems, Inc., 750 Palomar Avenue, Sunnyvale CA 94086.
10. National Semiconductor Corporation, 2900 Semiconductor Drive, Santa Clara CA 95051.
11. F. M. Mims, "A Programmable Timer/Counter," *Popular Electronics*, October, 1975, page 102.
12. J. Hanisko, "Timer/Counter Functions as a Phase Locked Loop Component," *EDN*, March 20, 1976, page 98.
13. R. Zwicker, "Phase Locked Loop Circuit Multiplies Frequencies by 2 to 256," *Electronic Design*, May 24, 1976, page 94.
14. D. T. Pohlman, "Timer/Counter Chip Synthesizes Frequencies and It Needs Only a Few Extra Parts," *Electronic Design*, June 21, 1974, page 114.

David E. Stanfield
3408 Catalina Dr.
Atlanta GA 30341

Forget Ohm's Law

-- be creative instead

Pushing electrons is a lot of fun, but it tends to keep you thinking. While this isn't harmful, it can lead to monodetached personality or tired brain. In other words, even the most dedicated experimenter needs time off. But, since he retired to his workbench in order to get away from his normal cares and troubles, it would seem that he must either stay in the frying pan or jump back into the fire.

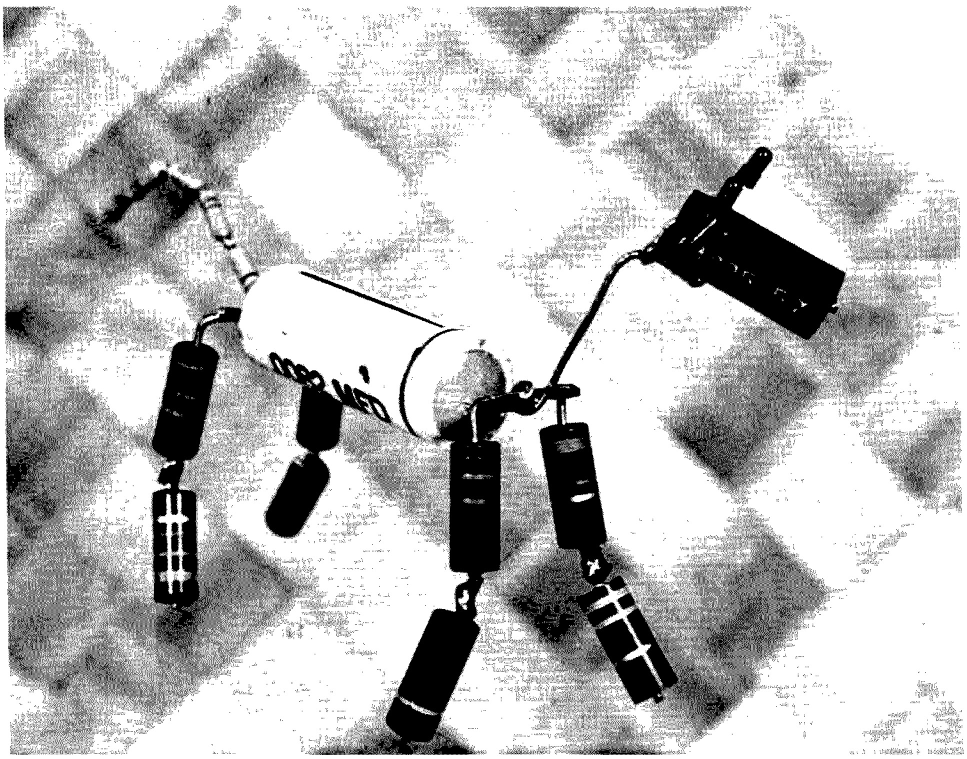

Take my word for it, this is a horse. His ears are LEDs, and, to tell the truth, I haven't the faintest idea what the series resistance of his tail might be.

If you think the experimenter has a problem, consider the electronic weirdo. You know him. He's the guy who's always building some marvelous mystifier, guaranteed to impress one and all. He has a house full of electronically guided frogs, automated picture straighteners, and an alarm system that uses delayed subatomic particle identifiers.

His problem is diminishing returns. When he started his career, he could get unlimited amounts of attention with a few blinking lights. But people have gotten used to his act, and now it takes an armful of sophisticated odds and ends to produce anything that merits more than a casual, "That's nice." Ever-increasing amounts of time and money are required to produce these gadgets, while the interest they generate steadily becomes less and less.

Finally, we come to the larger group of less fanatic, but quite active, electronics students, technicians, and hobbyists. They try to keep current by reading a couple of magazines a month. When they see a project that interests them, they may hesitate to give it a try, unless it's something they can whip together in an evening or two for about three dollars.

Since I'm a combination of all the types listed above, I feel that my method of dealing with these problems can be used by almost anyone interested in electronics. As the accompanying photos show, I sometimes fashion small figures out of resistors, capacitors, and other components that catch my eye. While I make no claims to artistic success, I don't feel compelled to hide my efforts in a cellar.

I won't promise you fame

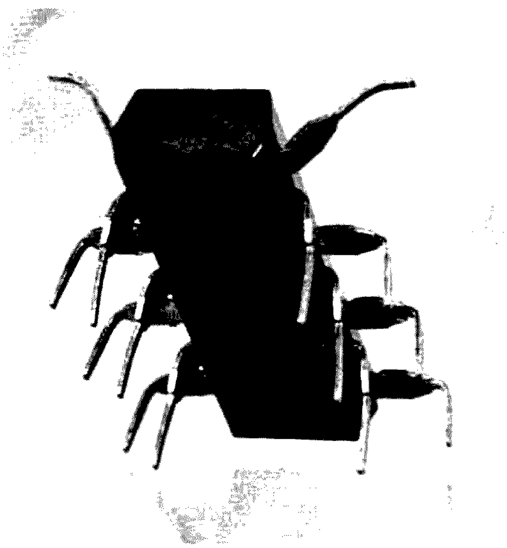

This strange little bug can be fashioned from an ordinary 14-pin integrated circuit in a matter of minutes. Though small in size, it can stir up a large reaction when left on some unsuspecting person's desk.

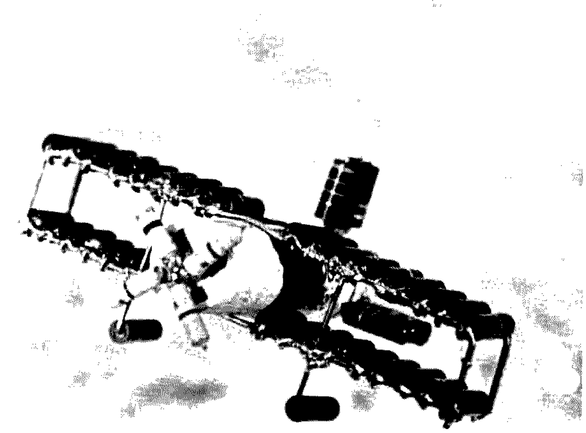

This little seaplane has been flying for three weeks on one charge of its capacitor. As soon as it comes down, I'm going to charge it with ac.

and fortune if you try making some of these figures, but I honestly feel that the time you invest will be of benefit to you. We all receive a sense of satisfaction whenever we successfully complete a project, and, in comparison to most electronics projects, these figures are a snap. They can usually be completed in a couple of hours, so you're not going to be tied down for an extended period of time.

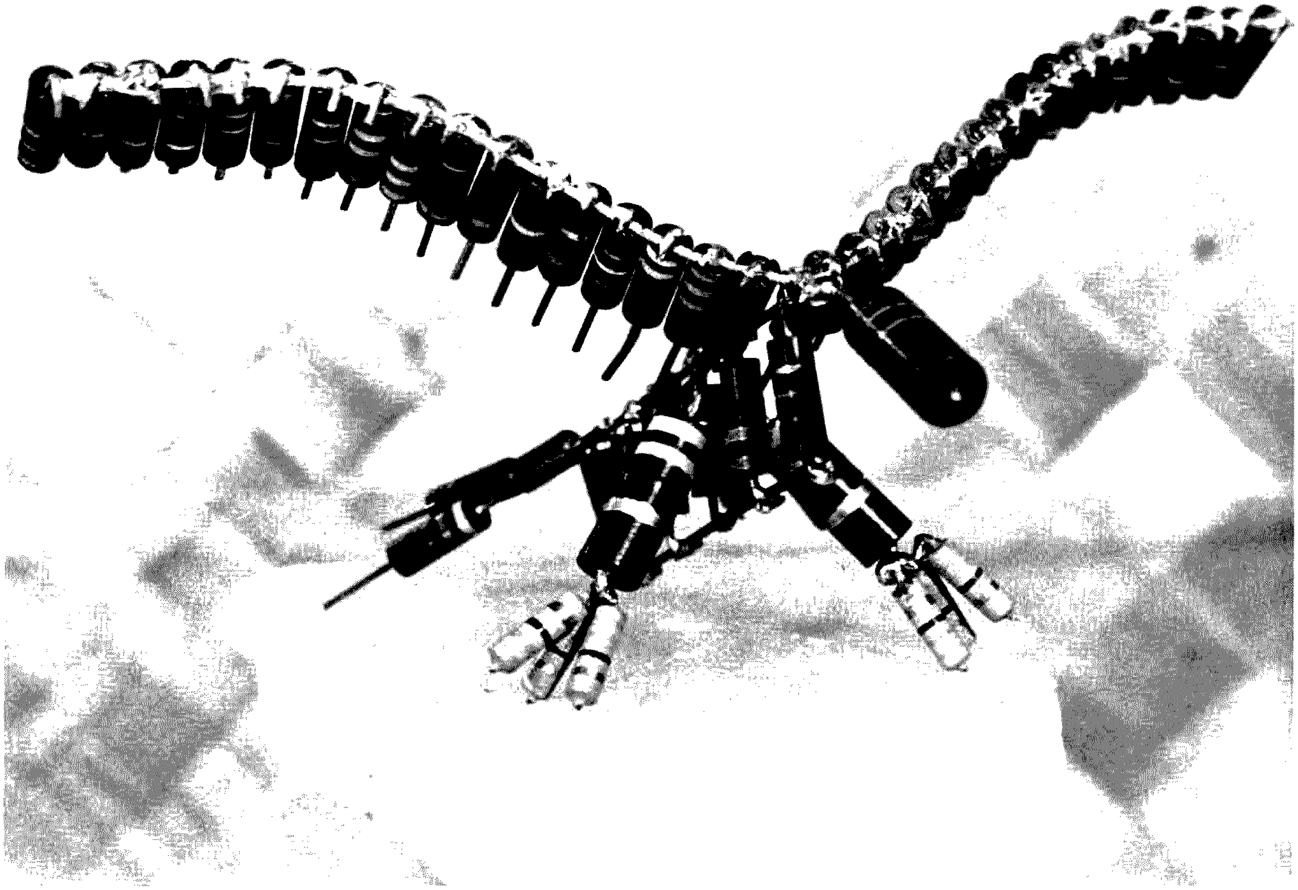

Somehow a project that started out to be a chicken ended up as an eagle. The next time you hear that America is no longer the land of opportunity, remember Eric the Eagle.

Since even those who have never even heard of electronics can appreciate these figures, they can be used as gifts, sold as art, or serve as conversation pieces.

I won't give explicit instructions for making these figures, but I will offer a few suggestions. To start with, I only use genuine electronics parts. This means no beer cans, bottle tops, or wood screws. If you don't like this rule, break it.

As a matter of personal taste, I always try to produce a figure most people can identify. I stay away from things like *Serenity of the Spirit, Part Four* or *Oneness with the Wholeness of Oz.* If you feel the urge to create these things, I wish you unification of the natural order.

In all cases, I use solder to join the various pieces together. I have used strips of masking tape and sheets of cardboard to hold pieces in alignment until I could get them soldered. At other times, my fingers served the same function. I've never used any of the miracle glues to tack components together, but my feelings won't be hurt if you do.

I know that resistors and capacitors can cost a bundle if they are purchased one at a time. Therefore, I recommend that you shop around for packages of mixed parts. Bags of 200 resistors for \$1.98, or 98 capacitors for \$3.00, are widely available. A few of these assortments will provide enough parts to make many figures.

I've intentionally made these suggestions pretty vague, as I feel too many rules would be restrictive. If you need rules and procedures, make them up. Try to keep in mind that the point of doing these figures is to enjoy yourself and perhaps share that enjoyment with others. If you want to copy or modify any of the figures shown in the photos, do so. I hope that you will then want to do some of your own design. ■

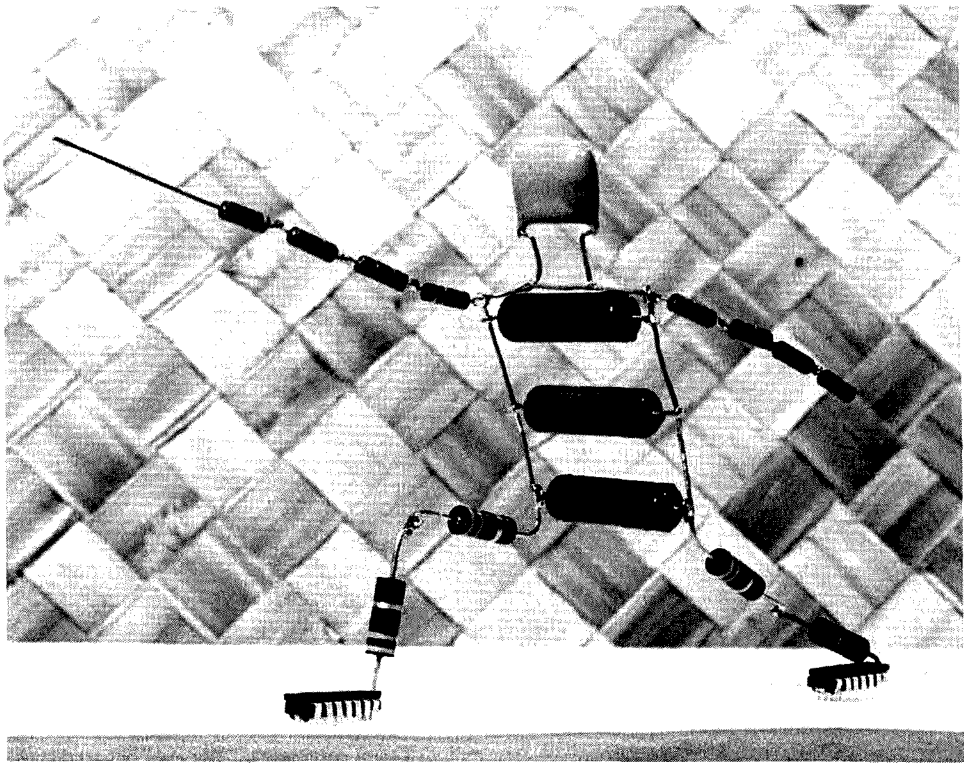

This fencer gave me a lot of trouble. Every time I tried to solder on another part, his sword would jab my finger.

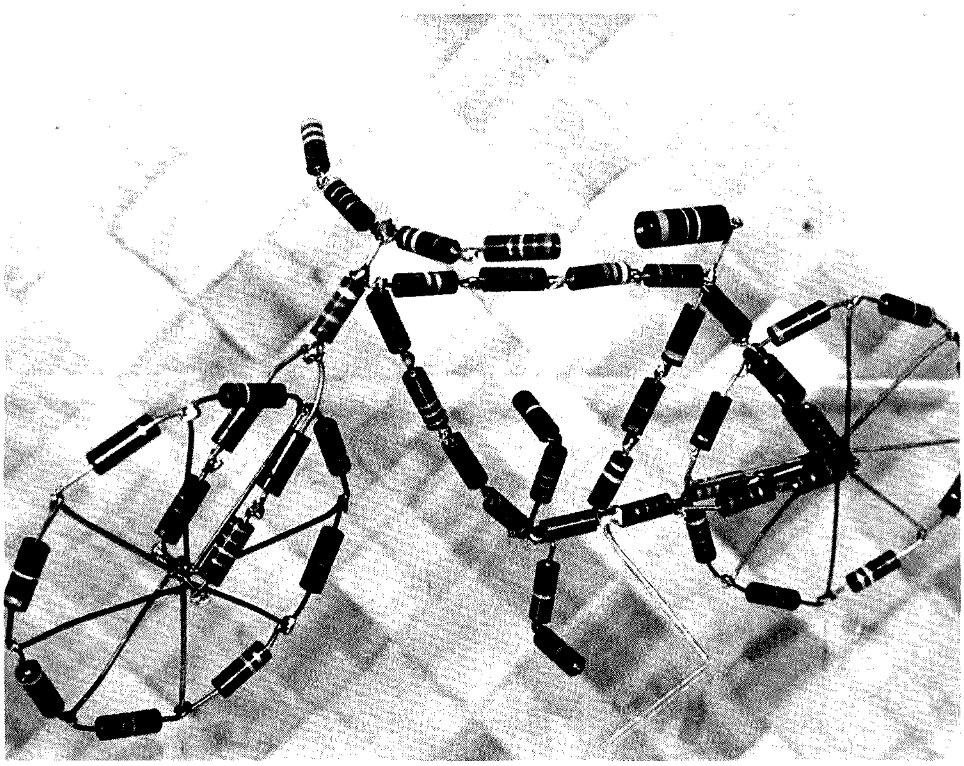

While the tires on this bicycle have never gone flat, they tend to give a rough ride. As soon as I work that out, I'll sell a million.

73 Magazine *Staff*

Brew Up A Signal Generator

-- required test gear

For certain aspects of equipment testing and alignment, as well as for circuit experimentation, a good rf signal generator is a must. Yet, many amateurs do not own such a generator because of the cost of one and because it is not as frequently needed an instrument as, perhaps, a scope or a VTVM. This article describes a simple rf signal generator that covers from 100 kHz to about 75 MHz in six bands. It is useful for checks of low frequency i-f circuits on up to VHF circuits (using harmonics up to 220 MHz).

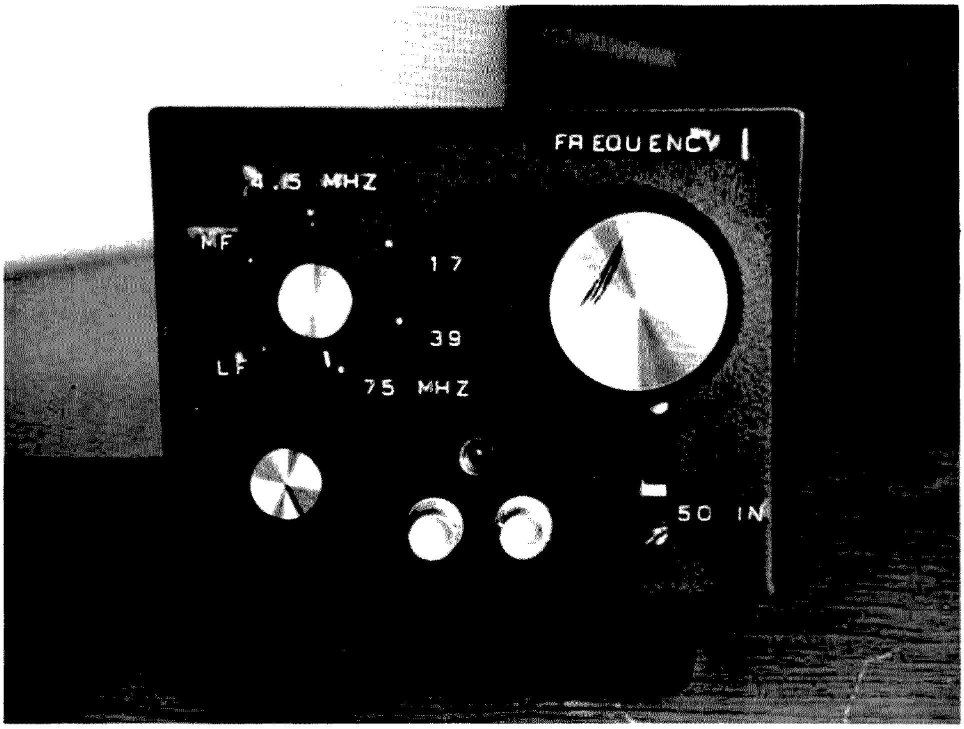

The rf signal generator has no frequency readout scale, for reasons explained in the text. Two BNC output connectors are used — one for the actual signal output, and one for connection to a counter.

The cost of the unit can be as low as $5, if one has an exceptionally well-equipped junk box, or it can cost up to about $20-25, in the average case. Still, it is relatively inexpensive for a wide range transistorized and portable signal generator.

The basic generator puts out a CW signal only over its operating range. Various optional circuits can be added to provide tone modulation and a sweep frequency capability. But we would suggest that these circuits be added later, once the basic generator is functioning properly.

One of the first things to notice about the generator is that there is no frequency readout dial scale. There are several reasons for omitting it. Usually, the frequency readout scale on most inexpensive generators is more fiction than truth. To do any meaningful alignment work today, one needs a counter to set any signal generator correctly — even some very expensive commercial units. One doesn't need a calibrated scale just to sweep past a 455 kHz i-f or to determine that the front end of an HF or VHF receiver is basically functioning. Lastly, the lack of the not-so-useful scale allows the unit to be far more economically and compactly constructed.

The electrical circuit of the generator is shown in Fig. 1. One FET is used as the basic oscillator in a Hartley-type circuit. The second FET is lightly coupled through the 5 pF capacitor in its gate lead to the oscillator. This stage functions as source follower

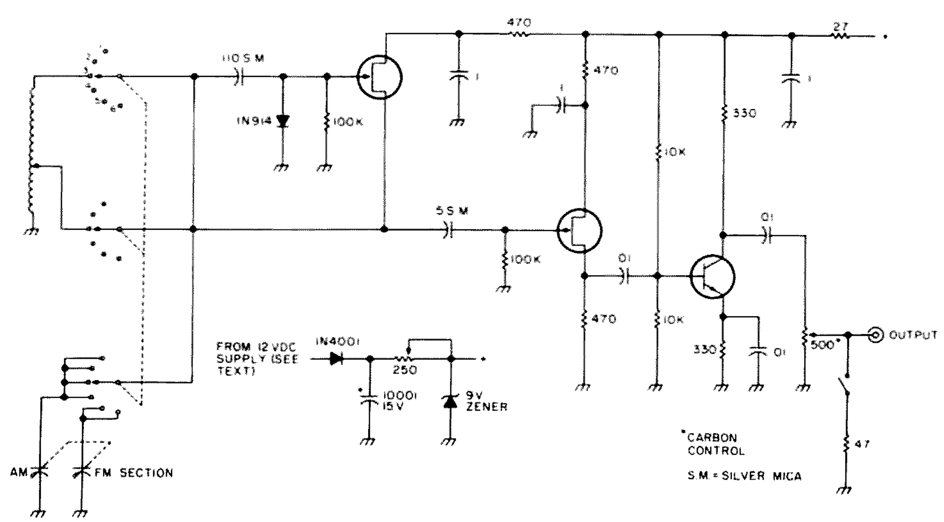

Fig. 1. Schematic of the generator. Only one of the six oscillator coils is shown for clarity. The FETs are HEP802 or MPF102 types. The output transistor is a 2N3866 or 2N706. Other details are covered in the text.

isolation stage. The last stage, the 2N3866, is designed to boost the signal level up to about 1 volt output on most bands. This level is far more than what is required for most receiver-type work, but the increased level comes in handy when doing transmitter exciter work, where the generator might substitute for a vfo. The output of the 2N3866 stage can be regulated by the 500 Ohm carbon potentiometer, which will provide about a 30 dB variation in output level. A 47 Ohm resistor can also be switched in across the output, so a true nominal 50 Ohm generator source impedance can be simulated for tests such as receiver sensitivity. The switching in of this resistor also serves as a high-low output level selector for the generator.

Although the generator is not complicated electrically, its true potential will not be achieved unless it is carefully constructed. Fortunately, no elaborate construction work is required, but attention should be paid to the few details mentioned here. All of the circuitry is mounted on a single-side copperclad board measuring about 2½ by 2½ inches, as shown in the photograph of the generator without the bandswitch installed. The board is wired point-to-point, using the isolated pad technique, starting with the oscillator stage toward the back panel of the enclosure and progressing forward to the 2N3866 stage towards the front panel. There is nothing critical about the wiring, whatever technique is used, but the circuitry should just be stretched out to provide maximum separation between the oscillator and 2N3866 output stage.

The heart of the signal generator lies in the bandswitched oscillator coil assembly and the variable tuning capacitor. The tuning capacitor is readily available broadcast receiver type, which contains a single section AM section of about 300 pF and a single section FM section of about 25 pF. Such capacitors can often be found with built-in tuning shaft drive reductions of 3:1 to 6:1. The Burstein-Applebee catalog is one source for such a capacitor, although various similar types should be available from Radio Shack, Lafayette, and the mail order suppliers. A simple alternative to the AM/FM type is the even more readily available standard dual section AM type, where one section, designed for local oscillator usage, has fewer plates. Remove more plates from the oscillator section, so it is left with 4 stator plates and 3 rotor plates.

The coils for the six bands can either be purchased or constructed from a mixture of home brew and commercial coils. As a completely purchased set, one can use the Conar CO-69 through CO-74 series, at a total cost of $4. These are replacement coils for an old-fashioned National Radio Institute tube-type signal generator, but they work just fine in the FET

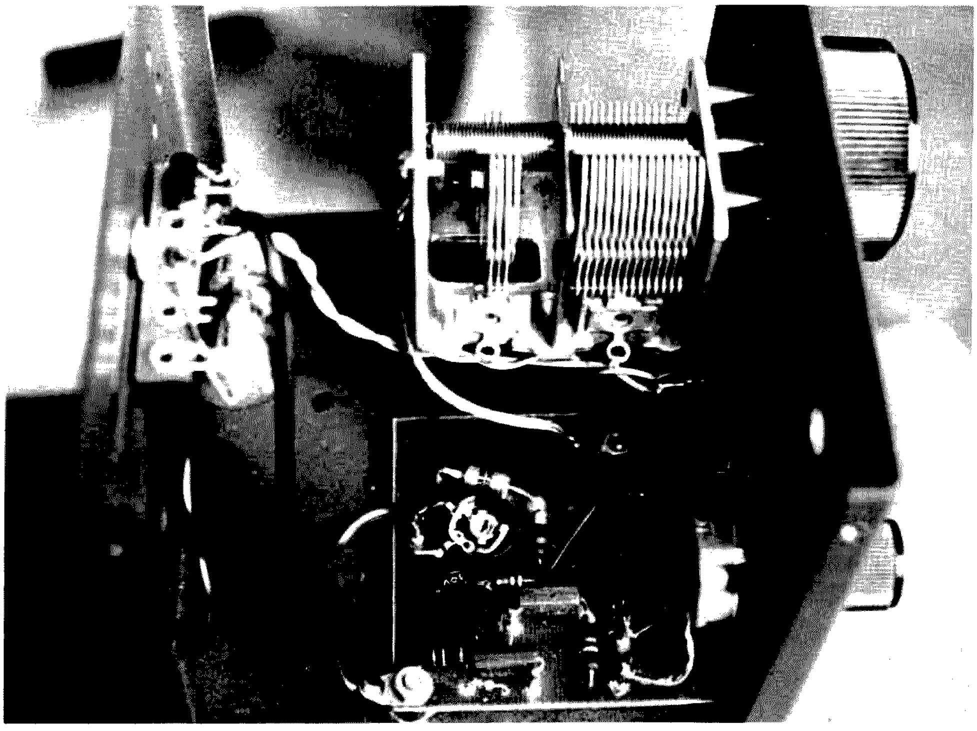

The oscillator circuitry is mounted on a 2½-inch square circuit board, and the components associated with the zener regulator are on a terminal strip on the rear panel of the enclosure. At this point, the bandswitched coil assembly has not been installed.

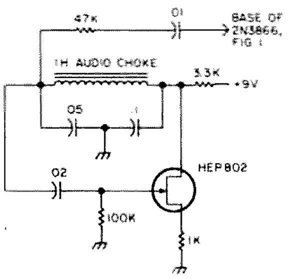

Fig. 2. Audio oscillator which can be added to the basic signal generator to aid in identification of the rf signal.

oscillator described in this article. The coils are available from Conar, National Radio Institute, Washington, D. C. 20016.

Another alternative is to just purchase the coils for the lower frequency bands, which would be almost impossible to home brew, and wind the other coils. In this case, for the first three frequency ranges one can use prewound J.C. Miller-type coils, which have the necessary tapped windings. The types are 9015, 9013 and 9013. For the highest three frequency ranges, one can self-wind the necessary coils on 3/8" diameter slug-tuned forms. The windings necessary and the tap points for each of the three coils are as follows: 15 turns tapped at 4 turns from the ground end; 7 turns tapped at 3 turns; and, 4½ turns tapped at 2 turns. The latter coil is wound using #18 wire while the other two coils use #24 wire.

The coils can be mounted directly on the 3P6T rotary bandswitch, as shown in the photograph. The coils are secured to the bandswitch with epoxy cement and wired in place. In order to ensure a good ground connection for the coils, a piece of sheet copper was cut out to resemble a 6-legged starfish and placed over the bandswitch shaft, so one of the "legs" could be soldered to each coil. This arrangement is probably a bit overdone. Ground connections from the coils to several ground lugs, equally spaced around the shaft of the bandswitch, should suffice just as well.

The generator is assembled in a standard commercial enclosure, which measures about 5 inches on each side. The dimensions were based on the size of the bandswitched coil assembly, tuning capacitor and circuit board. With a bit of effort, one should be able to fit the generator into the more readily available 4" x 5" x 6" aluminum enclosure.

The generator can be powered either from the ac line or from a 12-volt battery source, making it ideal for both fixed and portable applications. The power supply for the generator is *not* included in the same enclosure as the generator, and this seems to contribute significantly to the total lack of ac hum on the output signal. The ac power supply is an ac wall plug-mounted 12-volt dc battery replacement supply of the type commonly sold to power transistor radios.

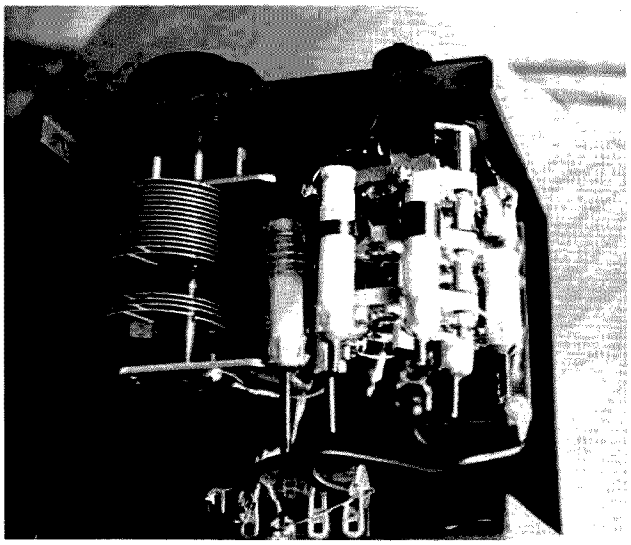

The bandswitched coil assembly is preassembled and then mounted in place. Individual coils are fastened to the switch by epoxy cement and wired in place.

Band	Low end	High end
1	100	570 kHz
2	400	1400 kHz
3	1.2	4.5 MHz
4	4.1	17.0 MHz
5	15.0	39.0 MHz
6	25.0	75-80 MHz

Table 1.

Within the generator enclosure, and as shown on the schematic, there is only a diode to protect against reverse voltage polarity, a 1000 mF filter capacitor, and a 9 V zener regulator. For portable application, 12 V from a battery pack, or even 9 V from a transistor radio-type battery, can be used. The 250 Ohm variable resistor before the zener is adjusted for the maximum resistance value that still allows the zener to maintain a constant 9 V output.

Because of the lack of a frequency readout scale, there is not the usual need to try to adjust the low and high frequency range excursions on each band. However, they should be checked with a counter to see that sufficient overlap exists between ranges. The slug tuning of the coils suffices to correct the tuning on each range. Although one has some latitude to adjust the frequency coverage on each band to suit individual preferences, Table 1 shows a typical arrangement, starting with the lowest frequency band.

The stability of the oscillator proved to be good enough on all ranges except the highest, so that temperature compensation was not needed. This is probably due to the low power operating requirements of the circuit and to the fact that the power supply is mounted externally to the generator. Since the highest band was not used extensively, it was not temperature compensated. But, by selection of small value NPO capacitors placed across the small section of the tuning capacitor and by watching the output frequency change on a counter, it should be possible to achieve excellent frequency stability on the highest range also.

Tone modulation can be added to the generator by the circuit shown in Fig. 2. The circuit provides a single frequency tone modulation, which is useful to identify the presence of the rf signal when working with a receiver having only an envelope (AM) detector. By placing the output of the audio oscillator on the gate of the second FET (instead of on the base of the 2N3866 as Fig. 2 indicates), a slight FM modulation of the oscillator will occur. So, the signal generator can be utilized with SSB/CW, AM or FM receivers.

A sweep frequency capability can also be added to the generator, by means of a varactor diode connected across the gate terminal of the oscillator FET to ground, and driven by a suitable sawtooth of triangular waveform. The 5 for $1 varactor diode selections available from Poly Paks (*see 73 ads*) are very suitable for this purpose.

This article has tried to present the basic construction information needed to put together a very good wide range rf signal generator. The generator should make a useful addition to any amateur radio station for general testing purposes, regardless of whether one's operating interests are concerned with "top band" or OSCAR. ■

Reprogram Your IC-22S

-- 300 channels in a 22-channel rig?

Nate Shaphran W6UTE
P.O. Box 3002
Culver City CA 90230

The Icom IC-22S is unique in that it is the only 22-channel 2 meter transceiver on the market at this time which uses a programmed synthesized approach and operates with discrete channel selection.

As purchased, it comes with the first five channels already programmed. The diodes and instructions are provided for the purchaser to select and program the other 17 channels.

Examining the instruction manual and data which came with the rig showed that it would be a simple matter to extend wires through diodes to the accessory plug and use eight external SPST switches to select the correct diodes which would put the rig on a desired frequency. This method worked, but it proved awkward to set a desired frequency without referring to a complete programming chart. (It could be done mathematically by using the binary number for a known frequency and adding or subtracting 1 digit for each 15 kHz from the known frequency.)

I then decided to try a single octal BCD switch, and that worked fine. But there was a drawback. Using one switch required that 17 of the 22 channels be utilized to cover all frequencies. This only left 5 positions for programming favorite frequencies, which may be fine for your area, but not for southern California.

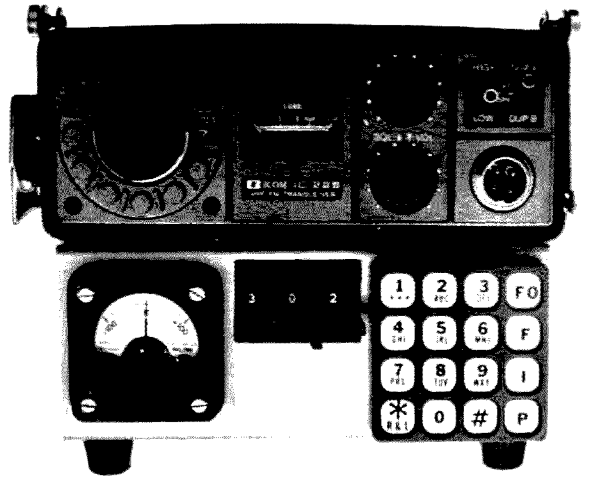

IC-22S with an accessory panel attached to the radio mounting bracket. Three lever-style switches can be seen mounted in the center of the panel.

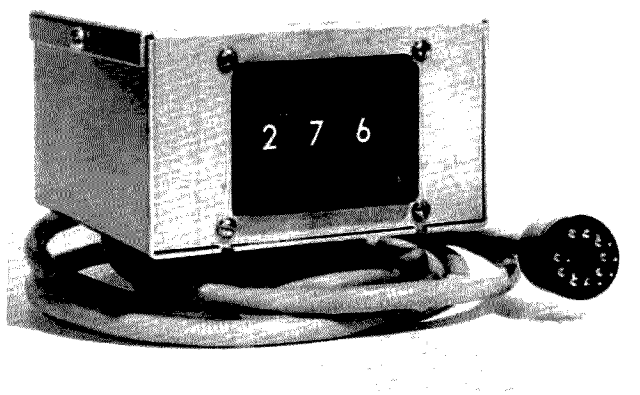

Frequency control switches, with a four-foot extension cable terminating in a nine-pin connector to plug into the accessory socket on the back of the rig.

Next, two switches were used. This only required the use of 3 channel positions and left 19 available for programming. This method proved excellent, as long as I did not object to using the channel selector switch together with the external switches to set frequencies. Since I wanted to program as many of the channels as I could, I went to the three switch method.

The three switch approach has decided advantages. More channels are available for programming, and once you have set the channel selector switch to the external programming channel, all of the frequency setting is done at one spot.

The three approaches will be described and you can select the one that fills your needs best.

One Switch Method

Since the rig comes with the first five channels programmed and since it will require the use of 17 of the channels to work with the one switch approach, it may be necessary to reprogram some of the first 5 channels to operate on your favorite frequencies. Program 17 adjacent channels according to the chart for one switch operation. Connect a wire to the selector switch common arm or to the +9 V point on the matrix board, and run the wire to an unused pin on the accessory socket. This method keeps the external programming switch hot at all times. Connect the BCD 1, 2, and 4 common lines on the matrix board through three diodes to other pins on the accessory socket. Wire the external programming switch to the accessory plug in accordance with the schematic for one switch operation. One caution to be observed when using this method is to remember to keep the external switch in the zero position when using any of the first five programmed channels, because

Channel Number	Program Frequency	"N" Number	128	64	32	16	8	4	2	1
6	145.95	104		X	X		X			
7	146.07	112		X	X	X				
8	146.19	120		X	X	X	X			
9	146.31	128	X							
10	146.43	136	X				X			
11	146.55	144	X			X				
12	146.67	152	X			X	X			
13	146.79	160	X		X					
14	146.91	168	X		X		X			
15	147.03	176	X		X	X				
16	147.15	184	X		X	X	X			
17	147.27	192	X	X						
18	147.39	200	X	X			X			
19	147.51	208	X	X		X				
20	147.63	216	X	X		X	X			
21	147.75	224	X	X	X					
22	147.87	232	X	X	X		X			
* 23	147.99	240	X	X	X	X				

*Table 1. Matrix board programming for Icom IC-22S using one BCD eight-position. *Note that the highest frequency using channels 6 to 22 is 147.975 MHz. 147.99 MHz can be obtained by using channel 23 and programming it for 240. A wire must also be run from the common to the selector switch.*

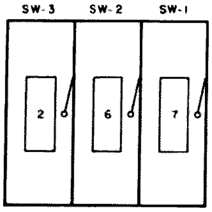

Fig. 1. Front view — three switches.

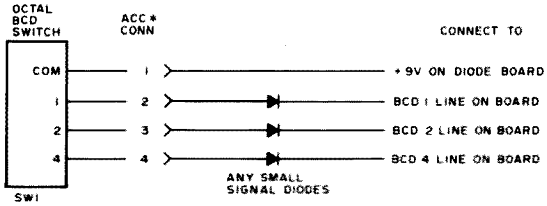

*Fig. 2. One switch method. Program channels 6 through 22 (or any 17 adjacent channels) according to the programming chart. *Any unused pins on accessory socket can be used.*

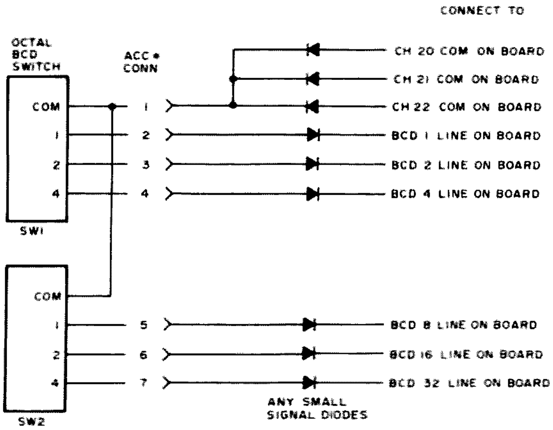

*Fig. 3. Two switch method. Program matrix board channel 20 for BCD 64. Program matrix board channel 21 for BCD 128. Program matrix board channel 22 for BCD 192. *Any unused pins on accessory socket can be used.*

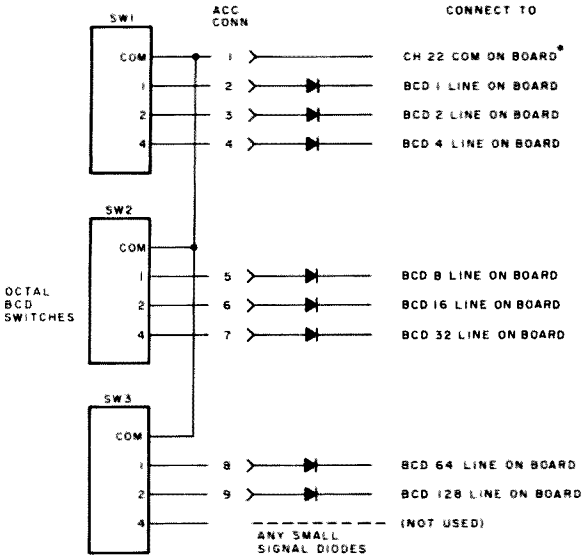

*Fig. 4. Three switch method. Note: Remove discriminator output and ground from the connector. *Any selected channel can be used.*

the switch will also affect those frequencies. Refer to the frequency chart for one switch operation to determine the resulting frequency for any combination of the 17 positions of the selector switch and the external programming switch.

Two Switch Method

The two switch method requires the use of three channels of the 22 available and isolation diodes to prevent interaction to the other channels. Connect three unused adjacent channels through diodes to an unused pin on the accessory socket. Program the three channels according to the table for two switch operation. Connect the 1-2-4-8-16-32 common lines on the matrix board through a diode (6 total) to other unused pins on the accessory socket. Note that a total of seven pins are required on the accessory socket for programming; therefore, the discriminator meter wires need not be disturbed. The other 19 channels can be programmed as desired. Wire the external switches as shown to the accessory plug. Resulting frequencies are shown in the table for two switch operation.

Three Switch Method

The three switch method uses only one position of the channels. It is convenient, because once you have

Channel			External	Switch	Position			
Number	0	1	2	3	4	5	6	7
1								
2								
3		These are programmed to your favorite frequencies						
4								
5								
6	145.95	145.965	145.98	145.995	146.01	146.025	146.04	146.055
7	146.07	146.085	146.10	146.115	146.13	146.145	146.16	146.175
8	146.19	146.205	146.22	146.235	146.25	146.265	146.28	146.295
9	146.31	146.325	146.34	146.355	146.37	146.385	146.40	146.415
10	146.43	146.445	146.46	146.475	146.49	146.505	146.52	146.535
11	146.55	146.565	146.58	146.595	146.61	146.625	146.64	146.655
12	146.67	146.685	146.70	146.715	146.73	146.745	146.76	146.775
13	146.79	146.805	146.82	146.835	146.85	146.865	146.88	146.895
14	146.91	146.925	146.94	146.955	146.97	146.985	147.00	147.015
15	147.03	147.045	147.06	147.075	147.09	147.105	147.12	147.135
16	147.15	147.165	147.18	147.195	147.21	147.225	147.24	147.255
17	147.27	147.285	147.30	147.315	147.33	147.345	147.36	147.375
18	147.39	147.405	147.42	147.435	147.45	147.465	147.48	147.495
19	147.51	147.525	147.54	147.555	147.57	147.585	147.60	147.615
20	147.63	147.645	147.66	147.675	147.69	147.705	147.72	147.735
21	147.75	147.765	147.78	147.795	147.81	147.825	147.84	147.855
22	147.87	147.885	147.90	147.915	147.93	147.845	147.96	147.975
23	147.99							

Table 2. Frequency table for use with Icom IC-22S and one external eight-position BCD switch.

Channel Number	"N" Number	128	64	32	16	8	4	2	1
20	64		X						
21	128	X							
22	192	X	X						

Table 3. Matrix board programming for Icom IC-22S using two eight-position BCD switches.

BCD Sw.	Chan. 20	Chan. 21	Chan. 22
00	145.35	146.31	147.27
01	145.365	146.325	147.285
02	145.38	146.34	147.30
03	145.395	146.355	147.315
04	145.41	146.37	147.33
05	145.425	146.385	147.345
06	145.44	146.40	147.36
07	145.455	146.415	147.375
10	145.47	146.43	147.39
11	145.485	146.445	147.405
12	145.50	146.46	147.42
13	145.515	146.475	147.435
14	145.53	146.49	147.45
15	145.545	146.505	147.465
16	145.56	146.52	147.48
17	145.575	146.535	147.495
20	145.59	146.55	147.51
21	145.605	146.565	147.525
22	145.62	146.58	147.54
23	145.635	146.595	147.555
24	145.65	146.61	147.57
25	145.665	146.625	147.585
26	145.68	146.64	147.60
27	145.695	146.655	147.615
30	145.71	146.67	147.63
31	145.725	146.685	147.645
32	145.74	146.70	147.66
33	145.755	146.715	147.675
34	145.77	146.73	147.69
35	145.785	146.745	147.705
36	145.80	146.76	147.72

37	145.815	146.775	147.735
40	145.83	146.79	147.75
41	145.845	146.805	147.765
42	145.86	146.82	147.78
43	145.875	146.835	147.795
44	145.89	146.85	147.810
45	145.905	146.865	147.825
46	145.92	146.88	147.84
47	145.935	146.895	147.855
50	145.95	146.91	147.87
51	145.965	146.925	147.885
52	145.98	146.94	147.90
53	145.995	146.955	147.915
54	146.01	146.97	147.93
55	146.025	146.985	147.945
56	146.04	147.00	147.96
57	146.055	147.015	147.975
60	146.07	147.03	147.99
61	146.085	147.045	
62	146.10	147.06	
63	146.115	147.075	
64	146.13	147.09	
65	146.145	147.105	
66	146.16	147.12	
67	146.175	147.135	
70	146.19	147.15	
71	146.205	147.165	
72	146.22	147.18	
73	146.235	147.195	
74	146.25	147.21	
75	146.265	147.225	
76	146.28	147.24	
77	146.295	147.255	

Table 4. Frequency table for use with Icom IC-22S and two external eight-position BCD switches.

Sw.	Freq.	107	145.455	200	146.31	270	147.15
020	144.63	110	145.47	201	146.325	271	147.165
021	144.645	111	145.485	202	146.34	272	147.18
022	144.66	112	145.50	203	146.355	273	147.195
023	144.675	113	145.515	204	146.37	274	147.21
024	144.69	114	145.53	205	146.385	275	147.225
025	144.705	115	145.545	206	146.40	276	147.24
026	144.72	116	145.56	207	146.415	277	147.255
027	144.735	117	145.575	210	146.43	300	147.27
030	144.75	120	145.59	211	146.445	301	147.285
031	144.765	121	145.605	212	146.46	302	147.30
032	144.78	122	145.62	213	146.475	303	147.315
033	144.795	123	145.635	214	146.49	304	147.33
034	144.81	124	145.65	215	146.505	305	147.345
035	144.825	125	145.665	216	146.52	306	147.36
036	144.84	126	145.68	217	146.535	307	147.375
037	144.855	127	145.695	220	146.55	310	147.39
040	144.87	130	145.71	221	146.565	311	147.405
041	144.885	131	145.725	222	146.58	312	147.42
042	144.90	132	145.74	223	146.595	313	147.435
043	144.915	133	145.755	224	146.61	314	147.45
044	144.93	134	145.77	225	146.625	315	147.465
045	144.945	135	145.785	226	146.64	316	147.48
046	144.95	136	145.80	227	146.655	317	147.495
047	144.975	137	145.815	230	146.67	320	147.51
050	144.99	140	145.83	231	146.685	321	147.525
051	145.005	141	145.845	232	146.70	322	147.54
052	145.02	142	145.86	233	146.715	323	147.555
053	145.035	143	145.875	234	146.73	324	147.57
054	145.05	144	145.89	235	146.745	325	147.585
055	145.065	145	145.905	236	146.76	326	147.60
056	145.08	146	145.92	237	146.775	327	147.615
057	145.095	147	145.935	240	146.79	330	147.63
060	145.11	150	145.95	241	146.805	331	147.645
061	145.125	151	145.965	242	146.82	332	147.66
062	145.14	152	145.98	243	146.835	333	147.675
063	145.155	153	145.995	244	146.85	334	147.69
064	145.17	154	146.01	245	146.865	335	147.705
065	145.185	155	146.025	246	146.88	336	147.72
066	145.20	156	146.04	247	146.895	337	147.735
067	145.215	157	146.055	250	146.91	340	147.75
070	145.23	160	146.07	251	146.925	341	147.765
071	145.245	161	146.085	252	146.94	342	147.78
072	145.26	162	146.10	253	146.955	343	147.795
073	145.275	163	146.115	254	146.97	344	147.810
074	145.29	164	146.13	255	146.985	345	147.825
075	145.305	165	146.145	256	147.00	346	147.84
076	145.32	166	146.16	257	147.015	347	147.855
077	145.335	167	146.175	260	147.03	350	147.87
100	145.35	170	146.19	261	147.045	351	147.885
101	145.365	171	146.205	262	147.06	352	147.90
102	145.38	172	146.22	263	147.075	353	147.915
103	145.395	173	146.235	264	147.09	354	147.93
104	145.41	174	146.25	265	147.105	355	147.945
105	145.425	175	146.265	266	147.12	356	147.96
106	145.44	176	146.28	267	147.135	357	147.975
		177	146.295			360	147.99

Table 5. Frequency table for use with Icom IC-22S and three external eight-position BCD switches.

switched to that channel, all frequency selection is done with the external programming switches without again touching the selector switch. Connect the channel that you wish to use for external programming (it must be an unused channel) to a pin on the accessory plug. Connect the BCD common lines through diodes (8 required) to the other pins on the accessory plug. (Since all nine pins are used, it will be necessary to remove the discriminator meter wires from the accessory plug.) Wire the external programming switches in accordance with the circuit for three switch operation. The other 21 channels can now be programmed as desired. The table for three switch operation shows the switch settings and resulting programmed frequencies.

There you have it. Remember that you are setting the programmed frequencies with the external switches, and you must still select simplex and transmit 600 kHz up or receive 600 kHz up using the mode selector switch (just as you must do with all other channels).

Using the three switch method, I have been able to operate simplex on every 15 kHz increment from 147.99 MHz down to 144.66 MHz. In addition, it is simple to select any of the fifty-four 600 kHz split repeater frequencies and operate conventional or reverse.

The switches are available as catalog items from several manufacturers. (A ten-position can be utilized, but the eighth and ninth positions would not be used because of the octal binary programming.) One closing comment is in order. Icom has designed the rig to operate between 146 and 148 MHz. Although the phase locked loop in every IC-22S with this type of external programming that I have checked will operate fine down to at least 145.35 Hz, an occasional one may not lock up below this frequency. ■

Gerald J. Hargett
Pinefields Farm
Route 2, Box 68 E
McComb MS 39648

Try the ID VIP Method

-- surefire troubleshooting technique

The average electronics buff, after a short while pursuing his hobby, accumulates a variety of tube and solid state equipment. If his interests encompass amateur radio, citizens band radio and microcomputers, the amount of gathered gear grows in quantity and complexity. Budgetary considerations often necessitate acquiring used equipment. Dealings may place test equipment, receivers, transmitters and such in one's possession which function poorly or not at all. This discussion is presented for those who would like to attempt repairing their recalcitrant equipment, but lack basic troubleshooting technique.

Repair of faulty electronic circuits in entertainment, communications, test and computing equipment is a broad area. Technicians who commercially pursue such employment usually specialize in families of gear. The television tech encounters variations on basic television circuitry. Marine technicians see similar designs in shipboard electronics. Communications equipment repairmen and digital circuitry troubleshooters bring specialized techniques to solve their problem machines. For an individual to attempt to troubleshoot a wide variety of equipment, particularly when motivated by a hobby interest, is a challenging and rewarding experience.

Some sources estimate 95 percent of successful electronic equipment repair is diagnosis of the problem. The remaining 5 percent represents the effort to replace defective parts or circuit alignment necessary to restore normal operation. While these figures may be inaccurate for the professional who may instantly recognize a circuit fault, then spend a good deal of time effecting repair because of equipment location or other logistics, these time increments should be realistic for amateur efforts. Hobbyists attempting their own repair jobs have one advantage over the professional – time. The commercial technician is selling his time. He finishes one job and hurries to the next. The amateur who wants his equipment operating well can take the necessary time to achieve this goal.

Any troubleshooting situation should first be approached with the head, then the hands. Reasoning from the symptoms indicated to the malfunction involves a logical pursuit through the circuitry toward an over-narrowing objective. This procedure is used successfully by professionals. With practice, the various steps become reflexive and swift.

Fig. 1 illustrates a simple, effective troubleshooting procedure. Inspect, diagnose, verify, isolate, and pinpoint constitute the procedure of investigation for the defect. Mnemonically, ID VIP may be helpful when first using this method. This technique, as others, becomes personalized with practice.

Inspection is the first step in the repair process. Obvious defects should be noted and related to the symptoms. Frayed line cord, broken connections, corrosion on switching contacts, overheated or burned resistors, swollen electrolytics, lingering odor of overloaded transformer windings, vacuum tubes with the tell-tale whitish clue of envelope leakage are typical items a careful inspection may discover.

Diagnosis of the symptoms follows the inspection. It is aided by the inspection as evident faults are eliminated. Reasoning from the effects observed (symptoms) to the causes is a complex mental judgment. Knowledge of basic electronics, familiarity with the particular circuit under consideration, awareness of how the equipment functions normally, and past experience all influence the original diagnosis.

Analysis of the problem is aided if the manual on the equipment is available. Of particular interest for beginning troubleshooters is the block diagram. This drawing indicates various sections of the equipment, signal flow, interconnections between sections, and other useful data. Logically going from effect to cause will localize the malfunction to one or more sections of the block drawing. Consulting the schematic will reveal individual stages within the suspected section(s). For example, the block stating audio functions may actually contain six or more individual transistor stages (transistors and related components).

When conclusions are reached as to probable causes of the equipment failure, verification of these judgments is pursued. Verification involves the next two steps, isolation and pinpointing, in the repair technique. The fault is isolated to the suspected section. Next it is narrowed to a stage within the section. Finally, steps are taken to pinpoint the defective part(s) which caused the equipment failure. As verification procedures are followed, new diagnoses may evolve. It is

not uncommon for one's original diagnosis to be incorrect. Testing each diagnosis will eventually lead to the fault. By following confirmation techniques, especially when several interrelated sections appear at fault, areas of the equipment which function properly are eliminated from the search.

Corroborating the diagnosis practically requires the use of test instruments to extend the senses. For realistic, effective troubleshooting, three basic test items are required: volt ohmmeter, service type oscilloscope, some type of signal generator. The VOM preferred because of its accuracy and portability is the transistorized model (TVOM). Its high input resistance is particularly useful in solid state servicing. The scope need not be an expensive laboratory quality instrument; a 3 inch CRT service type scope is adequate. For a signal generator, any type of oscillated signal rich in harmonics which will provide sufficient signal amplitude for the scope to discern is sufficient. One can inexpensively be fabricated from an IC and a handful of parts which will provide sine, triangular, and square wave outputs. Lacking a scope is an impediment. However, a crude signal tracer in such a situation can be some type of high impedance earphone. This substitute tracer's use is limited to audio and video circuits beyond the detector stage.

The symptoms encountered will dictate which instrument approach to use when verifying the diagnosis. If the fault is thought to be in the power supply section, the VOM can normally be used to track down the culprit. If signal path disturbance is evidenced, the scope can be employed to quickly isolate the area(s) of fault. Signal tracing stages within the isolated section should narrow the investigation to a simple circuit area in the equipment. At this point the VOM is used to pinpoint defective component(s). Most stages will involve less than a dozen components, so it would not be that difficult to check each part in the stage. However, voltage and resistance measurements will generally lead to the individual item causing the fault. Isolation procedures are varied. The particular symptoms encountered will suggest certain approaches. Some examples using the ID VIP system may prove helpful.

Case 1. Inoperative receiver portion of ham band transceiver; prior reports of poor quality audio on transmit. Very low level signal now coming from speaker on receive mode with gains open maximum. Inspection yields no abnormalities. Study of the block diagram in the manual indicates an audio section common to both transmit/receive. This area diagnosed as the trouble spot. Schematic print reveals four transistor stages in this section. Verifying the diagnosis, the tech first touches center contact of audio pot; loud signal from the speaker absolves the signal path between this point and the speaker from blame. Using a service type oscilloscope, signals are traced from the audio control backwards toward the detector area. (This could be reversed to go from detector toward speaker; personal preference and intuition influences this judgment.) At the second stage, a signal is found on the base, but nothing at the collector. Diagnosis confirmed; stage isolated. TVOM used to check for bias (.5 to .7 volt on bipolar transistors measured between emitter and base). Nothing. Transistor not working. Bias components check ok. Replacing the small signal transistor effects a cure. Transceiver tests bring reports of good audio on transmit, normal volume and quality levels on receive. Evidently

I NSPECT – obvious physical damage to line cord, resistors, corrosion, etc.
D IAGNOSE – manual, block diagram schematic print, symptoms evidenced, "effect to cause" logic
V ERIFY – use of test instruments to
I SOLATE – narrow fault to section, then to stage(s) within section
P INPOINT – check components within stage for defects

Fig. 1. ID VIP Technique.

the situation developed gradually. First reports of abnormal audio quality on transmit went unheeded; slightly distorted receive audio was compensated for by the operator's ear. When the transistor failed completely, drastically affecting receiver operation, the unit was scheduled for service.

Case 2. Readout of digital frequency counter missing part of segment display on all six digits. Small circuit board with only a few components showed no observed evidence of fault. Study of schematic indicates "B" segment not working on display. Diagnosis is either the IC (7208), current limiting resistor R3 (470 Ohms), or display is defective. It is unlikely that all digits are defective in the same area; the diagnosis centers on the R3 resistor. Verifying this judgment involves checking the resistor with the TVOM. It tests intermittent – make, break type of fault. Replacement of the resistor restores normal operation. The ID VIP system was modified in this application. Since few components form the total circuit, isolation is quickly achieved. In dealing with circuits using ICs, the isolating technique is to determine operating voltages, input/output signals. If the voltages are correct and an input signal is present but no output signal, replacement of the device is indicated (it is the only thing between these two points).

Case 3. Service type oscilloscope: trace intermittently fades and disappears. Careful inspection of the circuit board, CRT connections, controls, etc., yields no clues. Block drawing in the manual narrows this fault to something upsetting the dc voltages on the cathode ray tube. This diagnosis verified by using the voltage callouts in the schematic as comparison against actual readings taken with the TVOM at the CRT socket. All voltages within tolerance. New diagnosis formed that CRT is defective. No tester available, so with some misgivings, a new CRT ordered. (Putting money where judgment is!) Later installing the new tube restores normal operation.

Each troubleshooting situation demands a little different approach based on the same reasoning process. Familiarity with test instruments bolsters faith in findings as signal tracing techniques quickly isolate. A growing knowledge of how components behave will aid judgments when pinpointing faulty parts. Ohm's law is constantly at work in circuits offering clues to normal or abnormal operation. Use of some type of signal injector becomes a necessity when tracing from detector stages towards the rf circuits in receivers. In these areas, signals get progressively smaller and harder to detect on a scope. A good amplitude signal produced by the signal oscillator will not only be more easily viewed, but also will often force itself through defective stages. The decreasing gain will indicate a poorly functioning circuit. Rapid isolation in a dead or weak symptom concentrates on checking for any type of signal getting from stage to stage. The quality of signal can be considered later. The point at which the signal is lost is a good area of further investigation for faulty components.

Components

Any component in elec-

tronic gear is subject to failure. Fortunately, soft areas have been observed. Occasional lapses in quality control will turn out quantities of resistors, capacitors, ICs, etc., which exhibit definite weaknesses. These parts often show up in certain serials of commercial equipment. For example, TV chassis runs may use some of these parts. Professional techs after "ID-VIPing" a few such sets will remember these cases and do speedy repairs when similar models show up for service.

Small wattage resistors usually do not fail or change value unless some trauma (shorted bypass capacitor or solid state device) puts undesigned pressure on them. Larger wattage resistors are always subject to current stress and may change value or open.

Electrolytic capacitors are a problem area. Large value electrolytics commonly found in power supplies may develop high power factors, leakage, and general deterioration. Inspection will often uncover gross leakage. Overheating occurring in electrolytics is always a clue suggesting replacement. The smaller electrolytic capacitors associated with solid state circuits can cause troubleshooting headaches. Careful evaluation of ohmmeter readings will evaluate the condition of these parts. Small value capacitors often used in bypass applications can be checked with a scope to see if they are doing their bypassing job. Signals found where they should be shunted to ground indicate a capacitor fault. Likewise, coupling capacitors can also be tested.

Inductances respond to conventional testing methods. Ohmmeter readings are not helpful in problems with small coils having part(s) of their windings shorted. There is a method of testing such devices with a scope by observing the damped oscillations when a sawtooth signal is applied. This advanced technique and others are material for a future article.

Thus, for the hobbyist to troubleshoot a wide variety of his equipment is a challenge. Armed with basic test instruments, an organized troubleshooting plan and some technical information (at least a schematic) on the faulty gear, success can be expected, especially if the virtue of perseverance is present. ID VIP approach is one method of making a complex electronic assembly manageable. Information supplied by the symptoms, by the properly operating circuits, and by knowledge of electronics narrows the area of investigation to a specific point with only a few parts involved. Proficiency is gained with experience. ■

1. Work carefully and slowly on crowded circuit boards.
2. Don't hesitate to "lift" a component for testing. Time spent worrying about doing it can be used to do it and arrive at a definite judgment on its condition.
3. Work one component at a time. Do a neat, thorough soldering job.
4. Multiple defects are rare. Should several symptoms be encountered, particularly if some are "weird," check power supply performance carefully.
5. Unless exact replacement devices are used in some circuits, notably oscillator applications, some "alignment" of coils or capacitors may be required to re-establish proper operation.
6. Peaking "i-f" and "rf" adjustments should never be attempted without proper equipment. FM audio circuits may be accurately "touched-up" by "ear"; however, casual adjustments to i-f/rf circuits do more harm than good.
7. Be aware of lethal voltages present in some types of equipment. Safety practices such as using isolation transformers, discharging filter capacitors, wearing protective gear when handling cathode ray tubes and such should be followed.

Fig. 2. Helpful Hints.

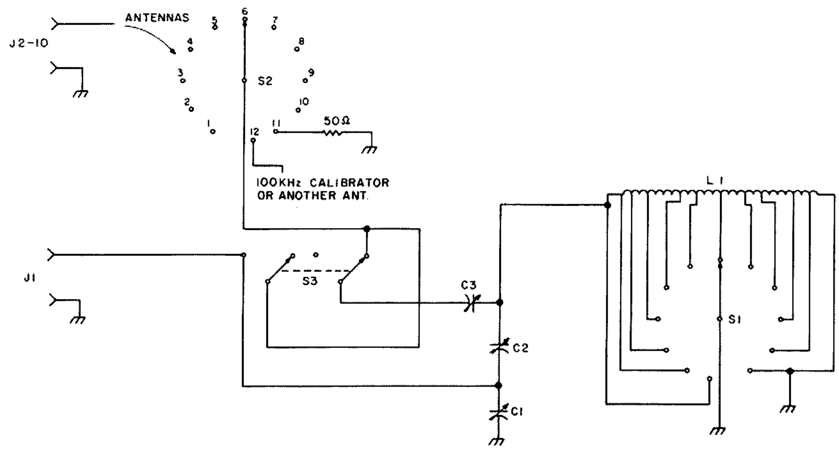

Fig. 1. Note: Tap L1 every several turns.

John Halliwell WB4VLQ
Rt. 1, Box 464
Hampton TN 37658

Build A Deluxe QRP Transmatch

-- make every milliwatt count

I have found that QRP has many advantages. High voltage components are unnecessary, bringing the cost of components down to a reasonable range.

Because of my low budget and the low cost of the Argonaut 509, it was love at first sight. The Argonaut has many advantages. At present I have no plans to use a linear, so I have no worries about an antenna switch or a tuner.

Fig. 1 shows a complete schematic of the circuit. The tuner can be switched in or out of the circuit. At position 11 of the switch, I have provided a 50 Ohm dummy load. This can be left out, if not needed. If used, it should be capable of handling your transmitter's output. Position 12 is left unused on my setup, to provide the option of a 100 kHz calibrator.

The tuner circuit was taken from the *Radio Amateur's Handbook*.

L1 could be a roller inductor, but that would drive up the cost of the circuit. The tuner works well on 80-10 meters.

Fig. 2 shows the layout of my circuit. Extra room was provided for the calibrator option.

For compactness, I used miniature 365 pF variables. C1-C2 could be a gang tuned capacitor, but that would cost more and take up more space.

The phono plugs should be the shielded type, to prevent unwanted radiation.

The cost of the unit should be 16 or 17 dollars, depending on the cost of the case and what options are used. ■

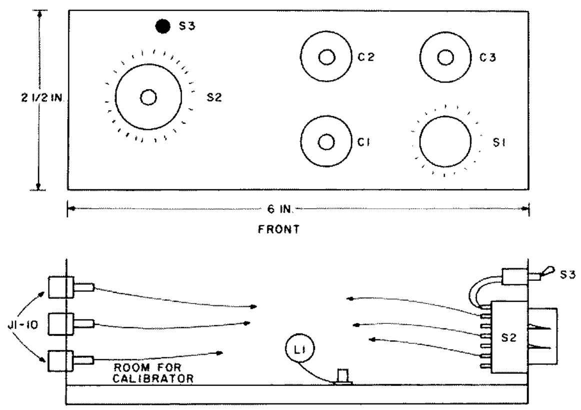

Fig. 2.

Parts List

C1-C3	365 pF variable capacitors (Radio Shack 272-1341 or equivalent)
L1	B & W 3012
S1, S2	1 pole, 12 position (Radio Shack 275-1385)
S3	DPDT (Radio Shack 275-1546)
J1-J11	Single hole phono jack (Radio Shack 274-346)

Parts List

AFSK keyer board

R1	1k trimpot
R2	1.2k
R3	1.2k
R4	1.2k
R5	6.8k Ω
R6 (4 ea.)	560 Ω
R7 (4 ea.)	1800 Ω
R8 (4 ea.)	330 Ω
R9 (4 ea.)	330 Ω
C1	.05 mF
C2 (4 ea.)	33 pF
C3 (4 ea.)	56 pF
Crystals	
Y1	2295 kHz
Y2	2975 kHz
Y3	2225 kHz
Y4	2125 kHz
IC1	7400
IC2	7400
IC3	7400
IC4	7400
IC5	74151
IC6	7490
IC7	7490
IC8	7490
Q1	SK3020 RCA or similar NPN

All resistors are ¼ Watt, except R1, a vertical mount circuit board pot.

RTTY ID board

R1	5-10k pot*
R2	1 meg ¼ W
R3	100k Ohm ¼ W
R4	1 meg ¼ W
C1	.01 mF
C2	150-200 mF
C3, 4, 5	.01 mF (bypass cap)
D1	1N914 or almost any diode
U1	7408 quad two-input AND
U2	7493 counter
U3	8223 256-bit ROM
U4	7493 counter
U5	74151 mult.
U6, 7	555 timer
U8	7430 8-input NAND gate

*circuit board pot, upright type; a 5 or 10k pot can be used with R2.

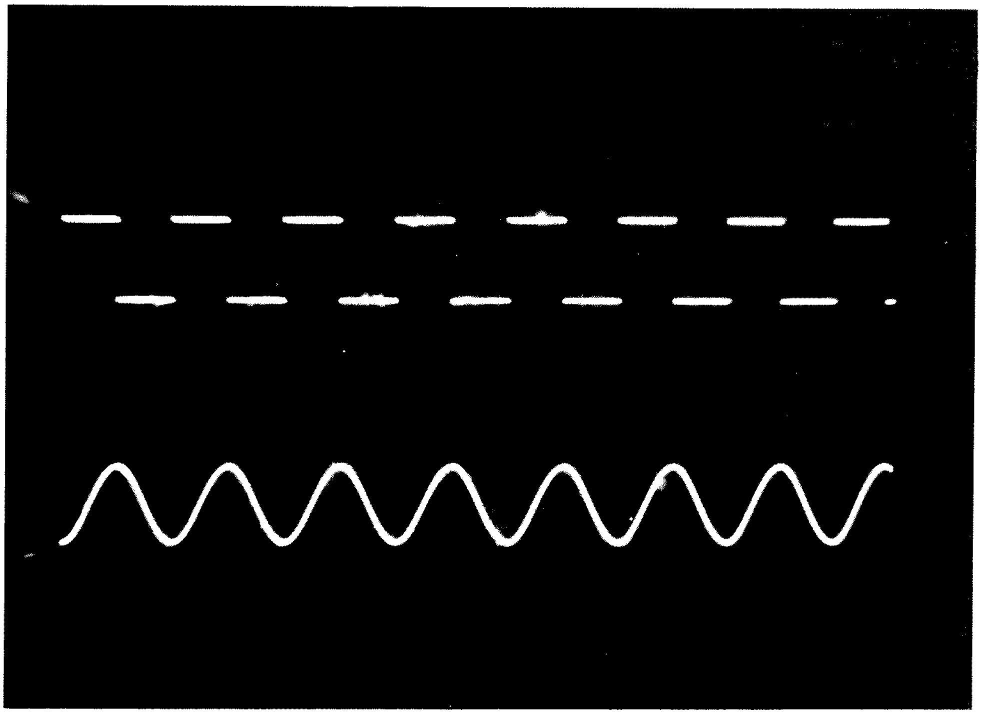

Photo A. Scope patterns. A (bottom) — sine wave output from low pass filter board. B (top) — square wave output from AFSK keyer. Patterns are displayed on a Tektronix 545-B dual trace scope.

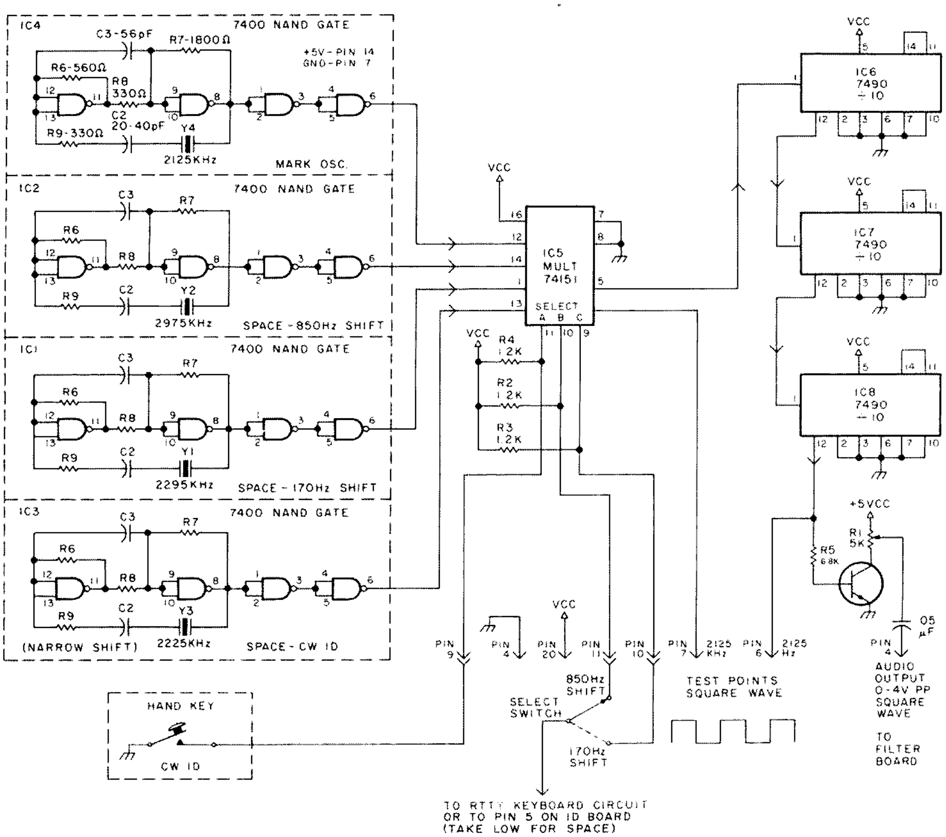

Fig. 3. AFSK keyer schematic.

tions already have a loop, so be sure to check this prospect.

My next step was to construct an AFSK keyer and assemble an FM transmitter. The star of this weather station system is the AFSK keyer that I developed. The keyer, of course, is not limited to this system and can be used in place of the many far less accurate keyers now in general use.

Anyone who operates amateur RTTY is aware of the inaccurate shift of some keyers. It's time that we move up to the state of the art. AFSKs with plus or minus 25 Hz tones are obsolete. A TTL AFSK keyer system is simply the least

expensive way to achieve highly accurate RTTY tones. The best accuracy comes from crystal control, and this AFSK keyer utilizes 2 MHz crystals to assure high precision. You will be pleasantly surprised at how inexpensive this keyer is when you begin to add up the costs. The divide-by-ten 7490 chips have been advertised as low as 45¢ each; the 7400s, for 16¢ each; the multiplexer, for 79¢; and the crystals, your biggest expense, will run between $3.00 and $4.50 each. The total cost will be in the neighborhood of $25.00 for an AFSK keyer, with an 850 Hz shift, a 170 Hz shift, and a narrow shift CW ID, with plus or minus 1 Hz frequency tolerance that requires no calibration. Not bad, huh?

The heart of the AFSK keyer is the crystal oscillator. I chose a 7400 quad NAND gate crystal oscillator for its simplicity and because it worked the first time I built one. The circuit requires only three gates, but I used the fourth gate as a buffer. I have forgotten where I got this circuit, but there are many similar circuits in use. (Jan Crystals lists a couple in their oscillator data sheet, which tells you to order AT cut crystals with a 32 pF load for these types of oscillators.) This circuit will work with almost any HC-6/U crystal, and on-frequency adjustment can be made, if necessary, by choosing a higher or lower value for C2. Although only two oscillators are needed for the weather station, I have laid out four crystal circuits – one for mark, one for 850 Hz shift, one for 170 Hz shift, and one for narrow shift CW ID. The output of each of these oscillators (pin 6) is connected to one of four inputs of the 74151 multiplexer. With all select inputs high (2.8 to 5 V), the mark oscillator frequency will appear at the multiplexer's output. When select input B is taken low (0 to .8 volts), the multiplexer will switch its output from the mark frequency to the selected space frequency, in this case 2975 kHz. Note: If A and B are taken low, no signal appears at the multiplexer output because an unused input will be selected. The output of the

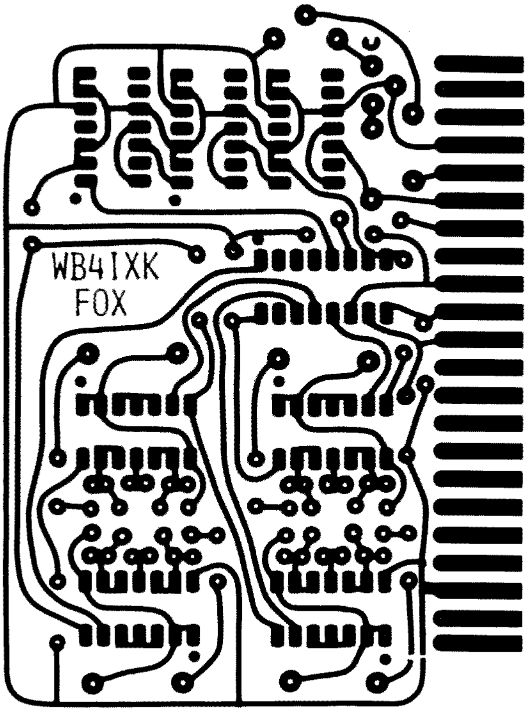

Fig. 4(a). AFSK keyer board.

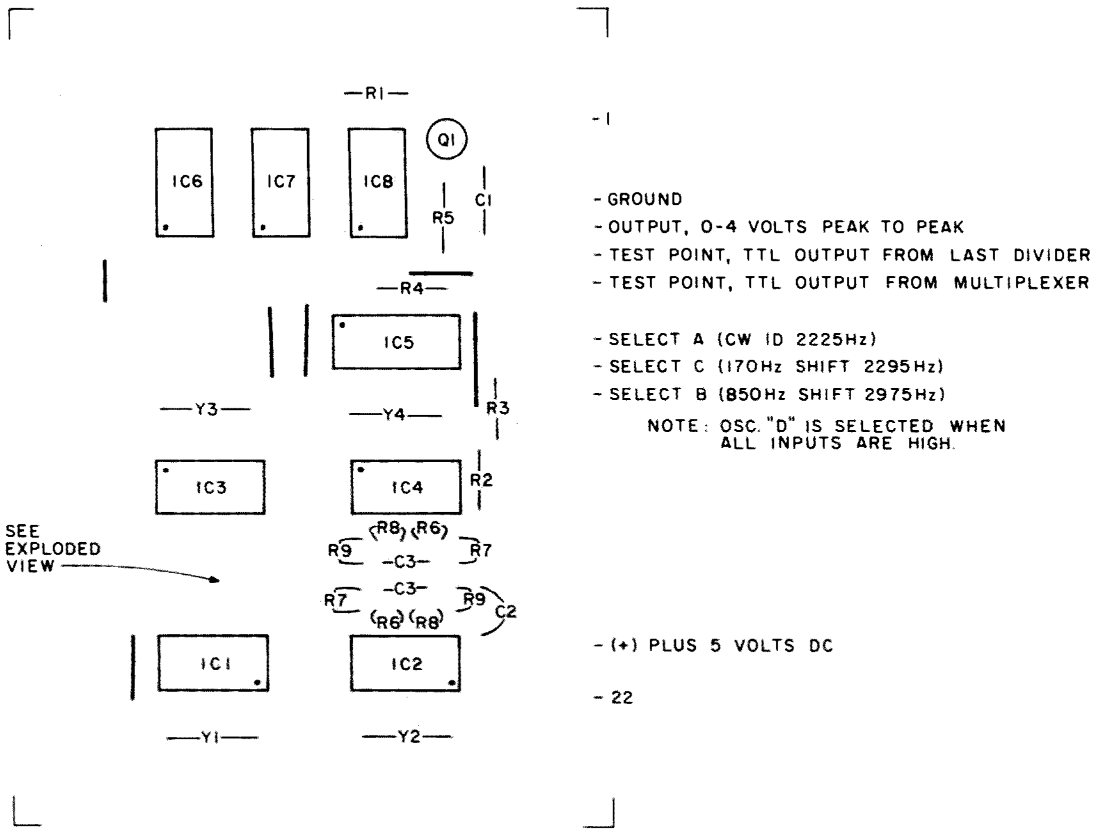

Fig. 4(b). Component layout, AFSK keyer board.

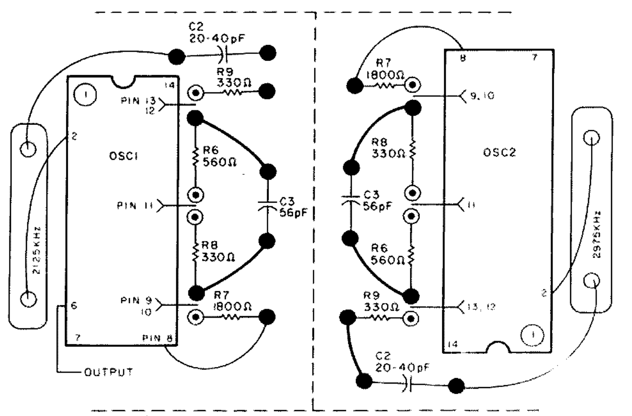

Fig. 5. A pair of the oscillator circuits from the AFSK keyer board (exploded view from component side of board).

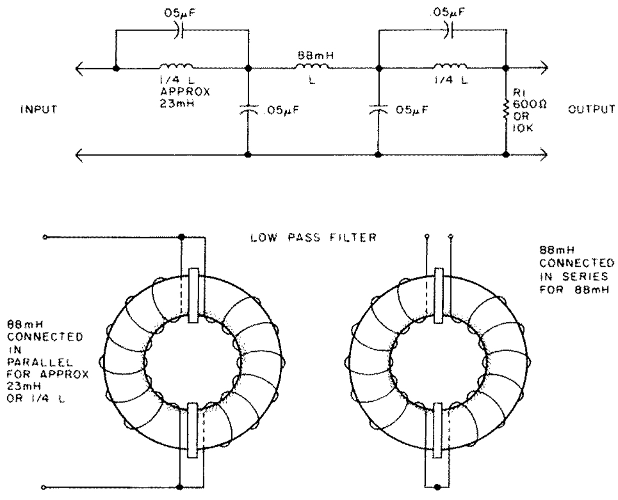

Fig. 6. Low pass filter schematic (by Frank Regier OD5CG).

multiplexer (pin 5) is connected to the divide-by-1000 dividing chain. The 2125 kHz signal at the dividing chain input will appear as 2125 Hz at pin twelve of the last 7490. A note here will explain why calibration is not required. The 2125 kHz crystal with its extreme tolerance of .005% would produce a frequency of 2125.106 kHz which, when divided by 1000, would net out to 2125.1 Hz. Even if the oscillator was one kHz off frequency, the output would only be one Hz off. The output from the last 7490 is buffered by Q1, and a variable signal level of 0 to 4 volts peak-to-peak is obtained from R1. This output is a square wave and must be filtered to produce a pure sine wave, especially if used to AFSK modulate an SSB exciter.

In order to filter the square wave from the AFSK board, a low pass filter is used. A circuit I found in a *Ham Radio* article by OD5CG does a fine job of removing the third and fifth harmonic, leaving a pure sine[1]. (See scope patterns A and B in Photo A.) As can be seen from the schematic, this filter requires minimum tuning (tune by selecting the proper value for C1, 2, 3, 4) and contains only eight components. The cutoff frequency, with the components shown, is about 5000 Hz, or about 1400 Hz below the third harmonic of the lowest frequency used (2125 x 3 = 6375 Hz). If lower tones for mark/space are considered, the .05 mF capacitors should be changed so that the cutoff frequency is lower than the third harmonic of the lowest frequency. For example, use a .1 mF capacitor for a cutoff frequency of approximately 3500 Hz, so that the third harmonic of 1275 Hz (3825 Hz) is above the cutoff.

The output from the low pass filter is adjusted by R1, located on the AFSK board, to a signal level necessary to drive whatever transmitter is used. For the GE Progress Line that I used, I adjusted the output for one volt p-p as suggested by the manual and inserted the signal at the mike input. (A dynamic mike input will require far less signal.) Deviation was adjusted to 5 kHz by the deviation control, and all other transmitter adjustments were made in accordance with the manual. The only modification I made to the GE transmitter was to form the antenna relay bracket so that the armature would remain closed. I used a mobile strip and, therefore, had to build a power supply, keeping in mind that it was to be keyed continuously, 24 hours a day.

I got the idea of using a PROM from an article by W6LLO, but, unlike his design, my circuit will automatically start and stop itself, and ID in teletype instead of CW[2]. As usual, I laid the circuit out with 22-pin edge connectors, for serviceability. The circuit uses a 555 mini-DIP timer (the RTTY pulse generator) for clocking the 7493s that address the memory at a teletype speed (for example, 18 ms pulses, negative-going to negative-going, for 75 wpm). Another 555 IC is used for a start/reset timer, which is allowed to time out when a steady mark for approximately 20 seconds is present on the loop. When this timer times out, its output will go low (0 to .8 volts) and allow the 7493s to address memory at the rate of the clock pulses.

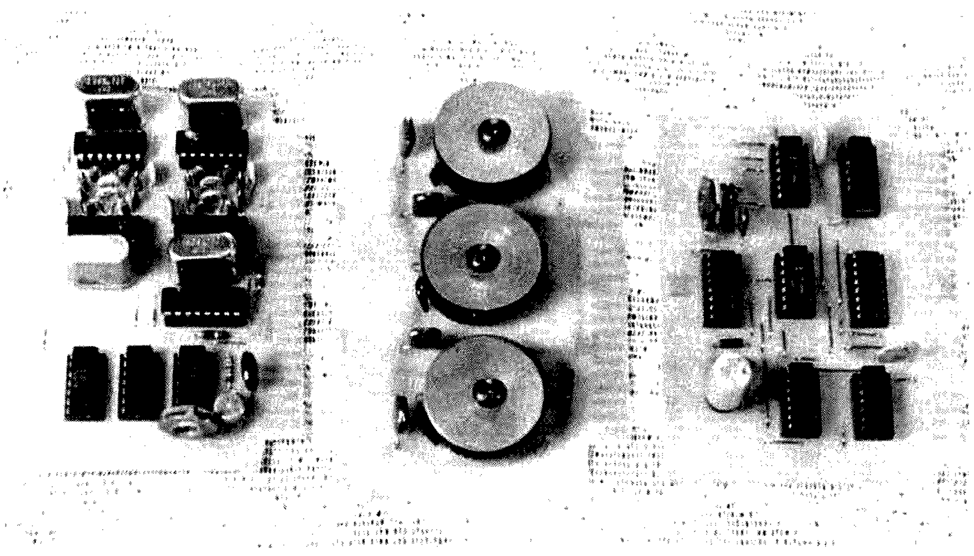

Photo B. The three circuit boards used in creating the AFSK tones and ID. Left — AFSK keyer; middle — filter board; right — ID board.

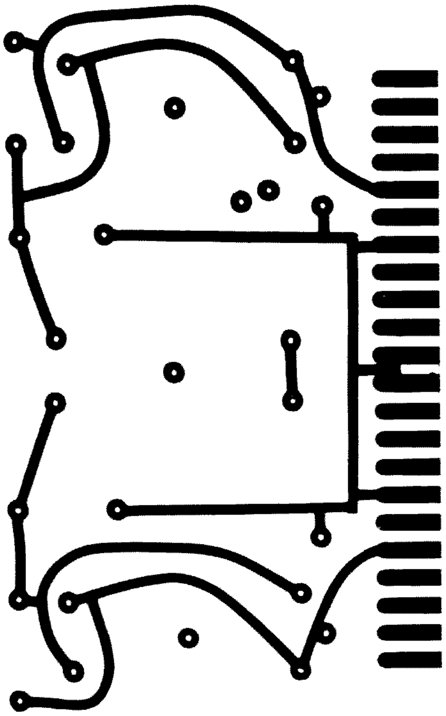

Fig. 7(a). Low pass filter board.

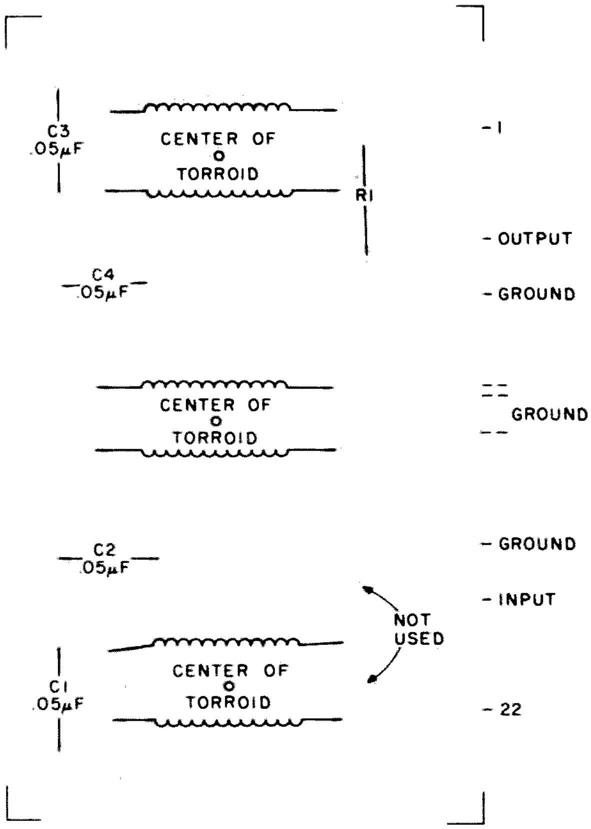

Fig. 7(b). Component layout, low pass filter board.

This timer will remain in its timed out state until it receives a pulse to reset it. This reset pulse will come from either the 7430 eight-input NAND gate that signals the end of memory or from any space from the landline teletype loop. In other words, a steady mark of 20 seconds or longer will start the ID, which will repeat itself every 20 seconds until a space comes over the loop. Even if the ID is partially into its cycle, a space will reset the address ICs to zero. Note: The zero position of the 8223 memory chip should be a mark.

Instead of programming the memory chip for a CW ID, I wanted to print the ID in teletype, mainly because CW ID is not required on the MARS frequency. By simply clocking the address ICs at the rate of a teletype pulse and programming the entire RTTY character into memory, we have a nifty message generator. If we divide the 256-bit memory into eight-bit words, we can write 32 words into the 8223 chip.

The breakdown of the eight-bit word is: bit 1, a space, the beginning of every RTTY character; bits 2 through 6, a mark/space combination determining the RTTY character or function; bits 7 and 8, the stop pulse, a mark required to be at least one and one half times the length of a RTTY pulse.

The outputs of the 8223 are at a low state when purchased, so I used mark as low,

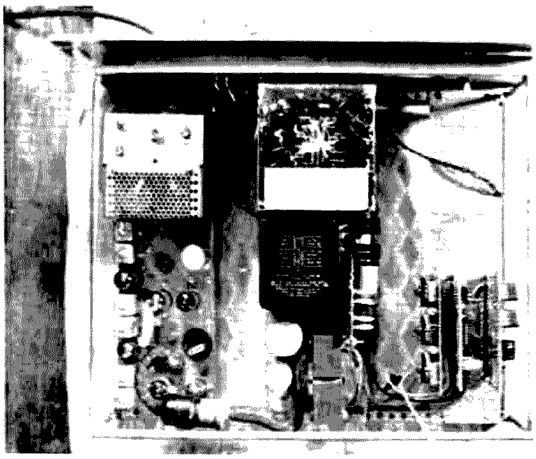

Photo C. Top view of completed transmitter, showing Progress Line 50 MHz strip at left, power supply at center, and AFSK keying boards on the right. Empty space in front of the boards houses the blower, which is mounted on the top cover.

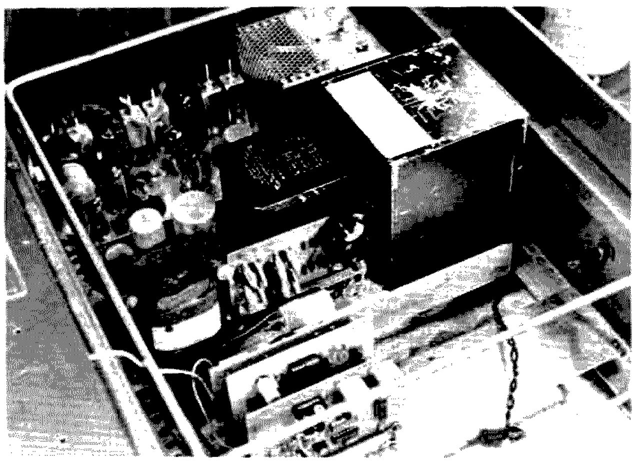

Photo D. Top view showing transmitter, power supply, and circuit boards. Note: AFSK board (outside) is a prototype.

```
ADM4IXX/A
          FLA WEAZIJNM
ADM4IXK/A
          FLA WEAZIJNM
ADM4IXX/A
          FLA WEAZIJNM##AX

ZCZC
FXUSB RWRB 281315
-TBW
PENINSULAR FLORIDA FARM AREA MINIMUM TEMPERATURE FORECAST
NATIONAL WEATHER SERVICE TAMPA BAY AREA RUSKIN FL
1015 AM EST  MON FEB 28 1977

TONIGHT    FAIR NORTH AND CENTRAL...DECREASING CLOUDINESS SOUTH.
LIGHT NORTHERLY WINDS WITH PERIODS OF CALM.  TEMPERATURES TO FALL
RAPIDLY NORTH AND CENTRAL ZONES AFTER SUNSET AND MORE SLOWLY
THEREAFTER.  OVER THE SOUTHERN ZONES TEMPERATURES WILL FALL
GRADUALLY THROUGHT THE NIGHT.  MINIMUM TEMPERATURES TO OCCUR NEAR
SUNRISE.

LOWEST TEMPERATURES

ZONES 6 7                28 TO 32 FROST

ZONES 8 AND 9            30 TO 34 FROST

ZONES 10 11  12          34 TO 38 EXCEPT 32 TO 34 IN THE POCKETS
                         SCATTERED FROST

ZONES 13 14 15 16 17     36 TO 40 PATCHY FROST

ZONES 18 19 20           38 TO 44

ZONES 21 22              40S AND 50S

OUTLOOK    SLIGHTLY WARMER ALL ZONES TUESDAY NIGHT.  CHANCE OF FROST
NORTHERN ZONES WEDNESDAY MORNING.


NNNN##
ADM4IXX/A
          FLA WEAZIJNM
ADM4IXK/A
          FLA WEAZIJNM
ADM4IXX/A
          FLA WEAZIJNM
##A
ZCZC
SDCA1 KMIA 281544
SDXX1 RWRB 281544

RADAR SUMMARY
NATIONAL WEATHER SERVICE MIAMI FL
1031AM EST MON FEB 28 1977

AT 1031AM EST...LARGE PATCHES OF RAIN WITH A FEW EMBEDDED VERY
HEAVY SHOWERS CONTINUED ALONG AND WELL OFFSHORE THE EAST COAST
FROM VERO BEACH TO WEST PALM BEACH.  OTHERS WERE OCCURRING JUST
NORTH OF THE LAKE AND NORTH OF PUNTA GORDA.  THIS ACTIVITY WAS MOVING
TOWARDS THE NORTH EAST AT 12 MPH.

SCATTERED SHOWERS CONTINUED IN PORTIONS OF DADE AND BROWARD
COUNTIES...FLORIDA BAY...AND THE GULF BETWEEN THE LOWER KEYS
AND DRY TORTUGAS.  MOVEMENT OF THIS ACTIVITY WAS TOWARDS THE
EAST AT 12 MPH.

MAX TOP 26 THSD FT.
```

Sample copy.

since there are more marks than spaces. The first step in programming is to make a chart, such as the one in Fig. 1. Next, fill in the characters you want in the spaces provided. Consulting the RTTY character chart (Fig. 2), fill in the appropriate mark/space combination. Then, following programming instructions, simply program the spaces by writing a logical "1" for the spaces. This data is from the *Signetics Digital-Linear-MOS Data Book.*[3]

Proceed as follows:

1. Ground pins 8 and 15, and remove Vcc from pin 16. Remove any load from the outputs.
2. Address the bit to be programmed by applying a logical "1" (5 volts) or a

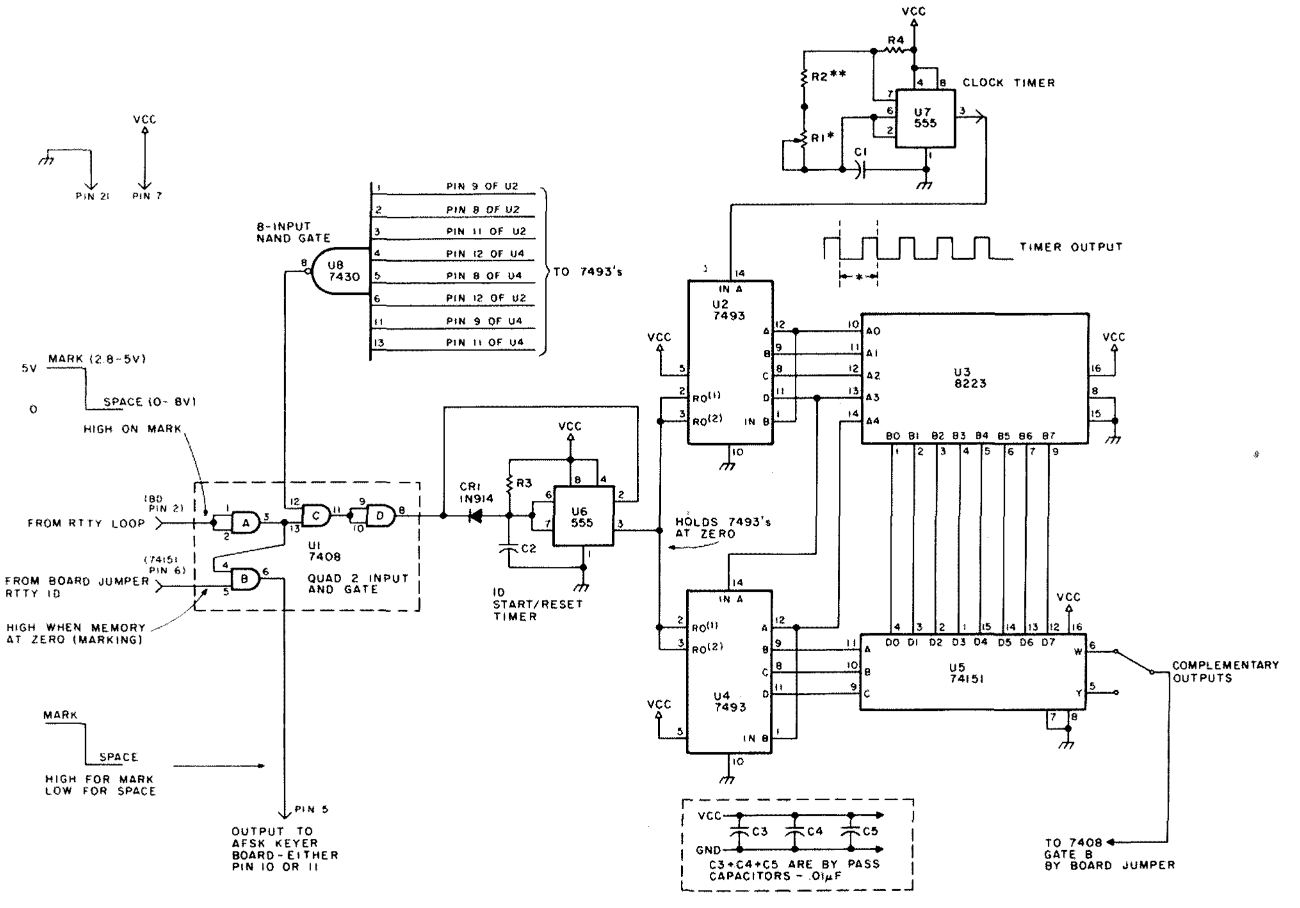

*Fig. 8. RTTY ID schematic. *Adjust R1 for a pulse width of 11 ms for 60 wpm, 18 ms for 75 wpm, 22 ms for 100 wpm (neg.-going to neg.-going). **R2 is used to extend range of R1 for easier adjustment of pulse width.*

logical "0" (0 – .4 volts) at the address lines: A0, A1, A2, A3, A4.

3. Apply 12.5 volts ± .5 volts to the output, to be programmed through a 390 Ohm resistor. Then apply 12.5 volts to Vcc (pin 16) for 1.0 ms.

4. Remove the 12.5 volts from the output. Check the output by placing 5 volts through a 1k resistor at the output, and place 5 volts at Vcc. There should be 5 volts at the output. If 5 volts are not present, repeat.

5. Repeat steps 2, 3, and 4 for each output to be programmed.

These chips are also available preprogrammed. If this is your choice, I recommend filling out the chart that accompanies this article and, then, transferring the information to the supplier's order blank.

Since there are a variety of keying methods to choose from, I will leave that part of the project up to you – you know what you have to work with. I do recommend that you familiarize yourself with interfacing circuits, such as these I have obtained from Fairchild Semiconductor's *TTL Applications Handbook*. You also should investigate the optoisolating circuits that are available, if isolation of high voltage (100 plus) circuits from low voltage (5

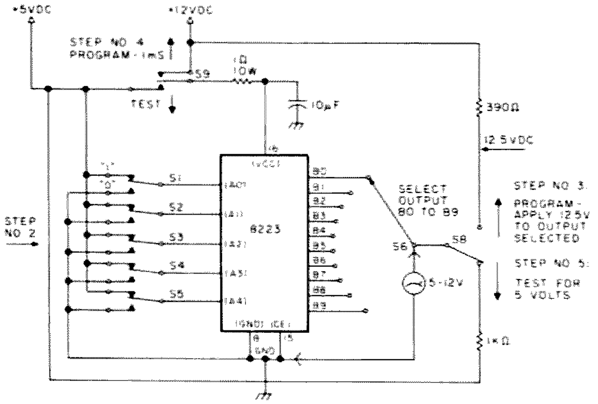

Address notes
(addressed psition is at 31)
A0 = 1
A1 = 2
A2 = 4
A3 = 8
A4 = 16

Example
(address bit #27)
S1 = 1 (1)
S2 = 1 (2)
S3 = 0 ( ) (4)
S4 = 1 (8)
S5 = 1 (16)
= (27)

Fig. 9. RTTY ID programming (from Signetics).

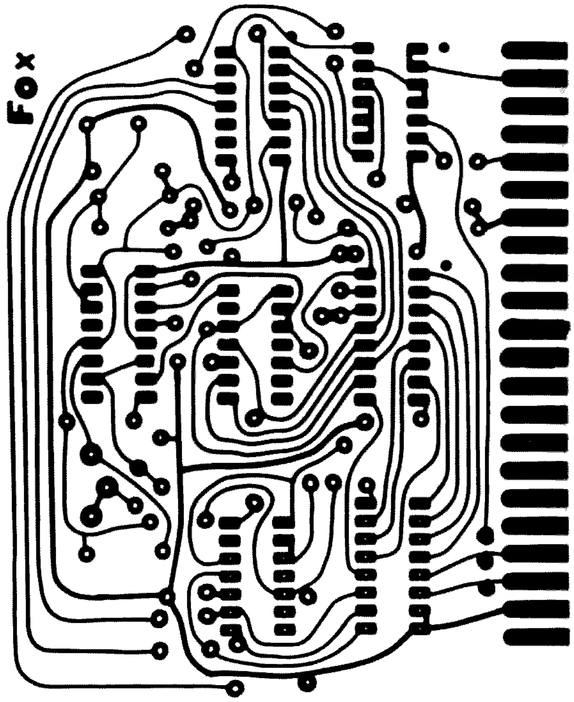

Fig. 10(a). RTTY ID board.

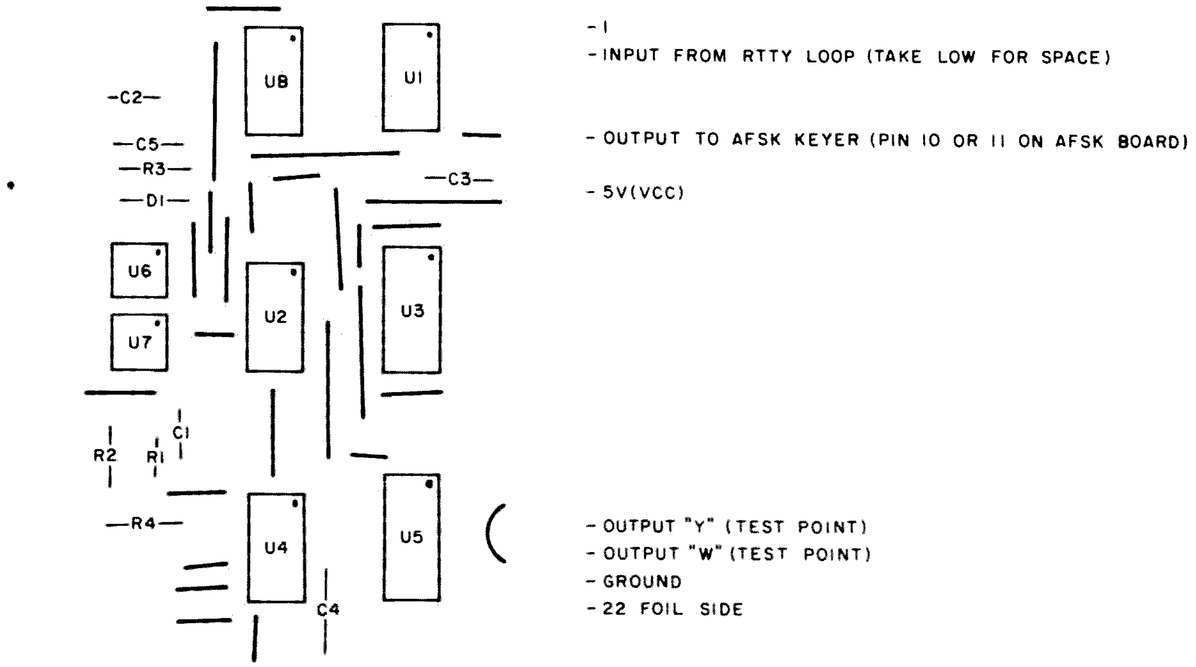

Fig. 10(b). Component layout, RTTY ID board.

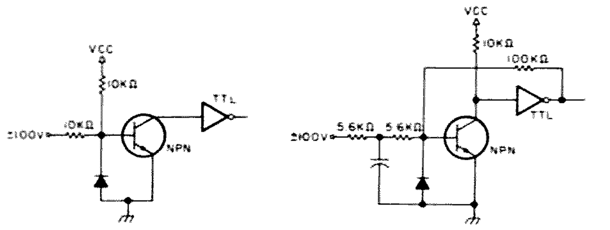

Fig. 11. Interfacing, transistors driving TTL (from Fairchild). Right-hand example includes RC filter to suppress noise.

volts) circuits is desired.

My station has been on the air for the last year and a half, and I have not had any failures with the TTL circuits. However, I have had considerable problems keeping the 6146s in the GE Progress strip from burning out screens. Special care, including cooling and proper tune-up, is needed for any transmitter keyed 24 hours a day. I am currently working on a solid state version to replace the GE tube transmitter.

In conclusion, I would like to thank Bob Ghormley WAØUVX, for his inspiration, and my wife, Linda WA4UIM, for her perspiration, in helping me get this article together. ■

References

1. Frank Regier OD5CG, "Simple Lowpass Filter for Audio," *Ham Radio*, January, 1974, page 54.
2. Howard L. Nurse W6LLO, "CW Memory for RTTY Identification," *Ham Radio*, January, 1974, page 6.
3. Signetics Corporation, *Signetics Digital-Linear-MOS Data Book*, Lexington, Massachusetts, copyright 1974, pages 4-9 through 4-11.
4. Peter Alfke and Ib Larson, *The TTL Applications Handbook*, Fairchild Semiconductor, Mountain View, California, August, 1973, pages 15-15 through 15-17.

Michael Kelleher WA6HDK
10002 El Nopal
Santee CA 92071

Guilty? Or Not Guilty?

-- an indictment of some 2m and 75m ops

Amateur radio has given us much to be thankful for and many good friends. But a certain segment of the hobby has really "turned me off" during the past year. Much of what I dislike about amateur radio can be found on 2 meters and 75 meters. Let me give you a few examples:

How about some of the local repeater organizations?

It seems to me that some of these groups have evolved into what is almost a political "machine." Among some of these groups there is constant "infighting" for more clout in the group, attempts at "one upmanship" through personal attacks on other amateurs, and a general disregard for the opinions of those who make the repeater groups viable — the general membership. Accusations are made against various groups and individuals without regard to the personal feelings and character of the individuals involved.

Another disheartening part in all of this is that there is such a small minority of these same amateurs who are willing to assist other amateurs and non-amateurs when it is needed. It is almost universally true that the loudest voices heard in various "political" maneuvers or in the "downtalking" of another's viewpoint or character fall silent when there is a call for help. Surely this is the antithesis of what the amateur spirit *should* be.

How often have you heard an amateur make disparaging comments about CBers, using trite phrases that we've all heard? How many of these same amateurs have really ever been of assistance to another when it was needed? Are we as willing to trouble ourselves to help another as so many of the CBers are? We tend to be great talkers — but are we doers?

And what about attracting new amateur radio operators? How can this be effectively done when so many of the experienced amateurs spend so much of the time settling personal vendettas and listening to their own voices?

So much of what we say on the radio is heard by so many people — including non-amateurs — and the type of behavior that is most remembered is the type so often found on portions of the 75 meter and 2 meter bands. It is a sad commentary on the amateur service.

We are involved in both a hobby and a *service*. We are not involved in amateur radio to bludgeon other individuals with our personal gripes, interpret regulations and bylaws to suit our personal needs, throw ourselves into every "political" situation within a group that may better our own position, or to flaunt our super egos over the radio under the cover of such phrases as "... Well, *we've* been a ham for forty years ..."

A good amateur listens more than he talks, so let's listen. Listen to Novices and relearn about what enthusiasm really means. Listen to the CBers — when the "chips are down" they often have some fine things to say (and they are *doers*).

Listen to yourself — *LESS*!

Listen to reason — *MORE*! ■

Rod Hallen WA7NEV
Road Runner Ranch
Post Office Box 73
Tombstone AZ 85638

New Life For Old Transformers

When amateur radio was very young, it was necessary to build everything from scratch. You couldn't just buy the components and home brew a receiver or a transmitter; you actually had to make the components themselves. If you needed a coil, you wound one on an oatmeal box. Rectifiers were jars of some foul-smelling electrolyte with the anode and cathode inserted. Capacitors were built up and so on. The reason was, of course, that the necessary parts were not available.

Today, kit-building is popular among hams and computer hobbyists for economic reasons and not because assembled units are hard to get. Building is great fun, and I enjoy it, and the money savings certainly enter into the fun. I'm not suggesting that everyone start fabricating their own ICs or keyboards, but I think that some might find the following information useful.

When I decided on the Processor Technology SOL System, I ordered only the PC board kit in order to stay within my budget. This is a complete microcomputer on a board with video and keyboard interfaces, cassette controller, serial and parallel I/O ports, RAM and ROM, and much more. All I needed to get it flying, other than the

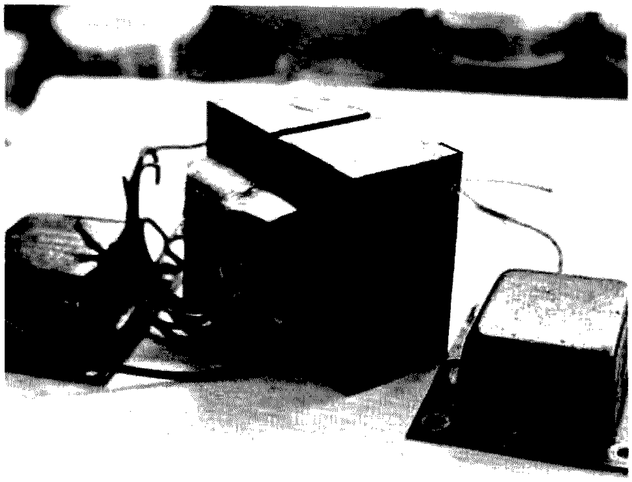

Retired television transformer with the covers removed.

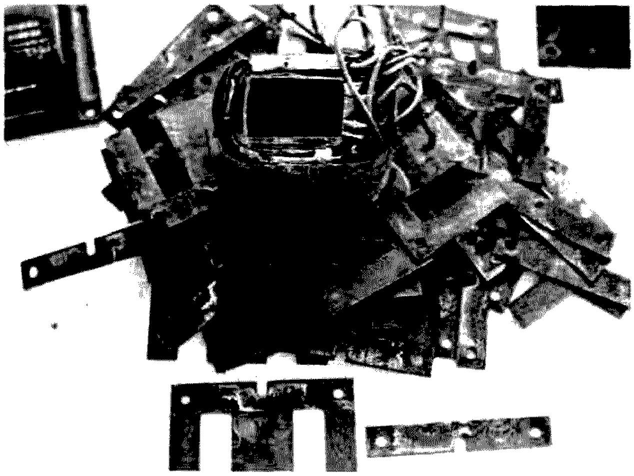

The winding pileup of the transformer sitting on top of the E and I segments.

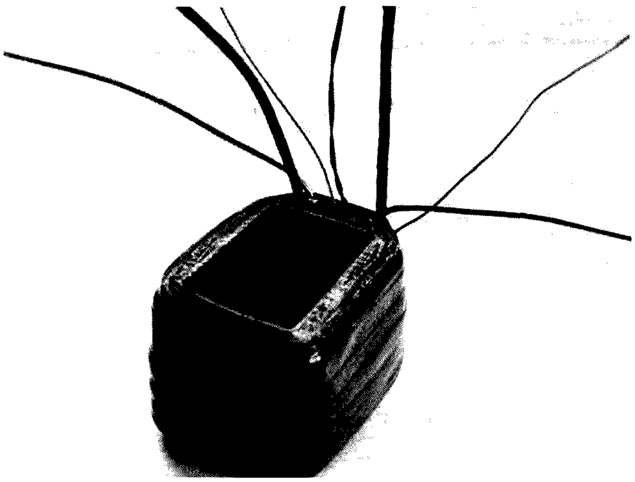

The winding form completely rewound, taped, and ready to be mounted back in the core.

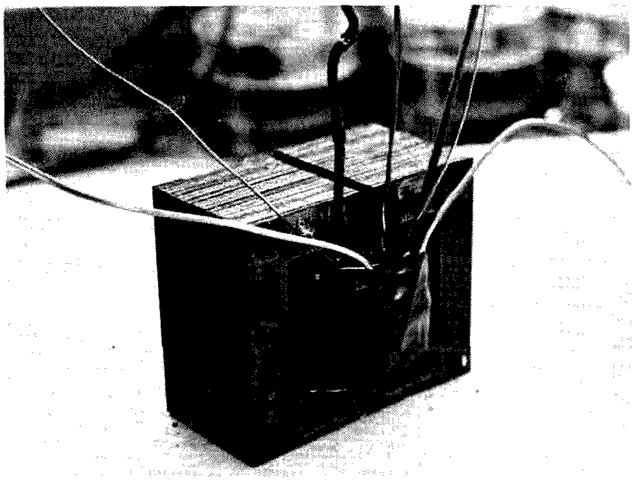

The transformer reassembled. It has been said that the segments should be shellacked before reassembly, but that seems like a messy job, and I haven't found it necessary. All that remains is to insulate the leads and replace the covers.

be easily removed. Use the blade or one of the I segments under the top E segment all the way around and through the middle of the winding, and it should pull out with a pair of long-nose pliers. Wiggling it back and forth while pulling should do the job. Once the first segment is out, the rest can be loosened and pulled out without problems.

You want to get rid of all of the windings except for the primary, which you'll reuse. It should be closest to the center of the winding pileup. You can determine this by tracing the leads you identified earlier. Starting from the outside, unwind the layers one at a time until you get down to the level you identified as the 6.3-volt filament winding. As you unwind this layer, count the turns of wire carefully. This is important! This tells how many turns each of the new windings must contain.

Mine had 12 turns, which means that this transformer was designed to have two turns of wire per volt. Using the simple ratio formula P/S = VP/VS, where P is the number of turns in the primary, S is the number of turns in the secondary, VP is the voltage in the primary, and VS is the voltage in the secondary, it is possible to determine how many turns each of the other windings had, but it isn't necessary. All you want to know is how many turns per volt your transformer has. If you were building transformers from scratch, you could use whatever value you desired, but two seem to be standard, as it has been the same on all of the transformers I've rewound.

Remove all the rest of the windings except the primary, and, if it is covered with a copper foil shield, leave it in place. Wrap the primary winding with tape, and you're ready to start rewinding.

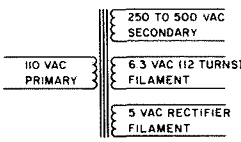

Fig. 1.

Rewinding

The number of turns needed for each winding is the turns per volt times the desired voltage. Fig. 2 shows how I rewound my transformer. For the 16-volt windings I used #16 Formvar insulated wire, which will handle more than 3 Amps (Table 2). Plastic or enamel insulated wire or smaller sizes can also be used if your current requirements are lower.

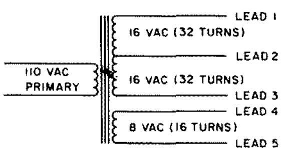

Fig. 2.

Wind the higher voltage winding first, leaving a foot or so for a connecting lead. Wind tightly and neatly until you reach the center tap (32 turns on a 2 turns-per-volt transformer), leave a loop about a foot long for the center tap, and then wind the second half of the winding with another one-foot lead at this end. If all of the turns won't fit on one layer, double back toward the beginning. Wrap this winding with tape.

Wind the 8-volt winding next, using wire large enough to carry the required current (Table 2). I didn't have any #10 but did have plenty of #16, so I used 3 strands of #16 loosely twisted together, which should handle more than 10 Amps. Slip some insulation over the leads, and tag them for identification. I used plastic insulation removed from lengths of regular house wiring. Shrink tubing or tape can also be used.

#10	14.8 Amps
#12	9.3 Amps
#14	5.8 Amps
#16	3.7 Amps
#18	2.3 Amps
#20	1.4 Amps

Table 2. Current-carrying capacity of wires in transformers.

Reassembly

Put the segments back together in the windings by alternately stacking them just the way they came out. A hammer and a small block of wood may be necessary to drive in the last segment or two. Do not use the hammer directly on the segments – you'll flare the edges and they will not fit together closely. Make sure that the holes in all of the segments are lined up, and replace the covers and any insulating material they may have contained. Tighten the bolts good and tight. The first transformer I rewound had an audible hum until I really clamped the segments together.

Now you've done it and can check the voltages with a meter. They may differ from our design voltages a little, but, after rectification and filtering, you'll have plenty for your regulators. See "Heavy Duty Power Supply," by Will Cattey, in *Kilobaud* #4, page 78.

All of this may have sounded complicated and difficult, but it isn't really. It took me longer to tell this than to do it. Now I can start building my SOL System. ■

George Tam KH6EM
4160 Papu Circle
Honolulu HI 96816

Simple Scanner For the IC-22S

After using the Icom 22S for a time, I found that although it was easy to change channels, I wanted a scanner. A study of the ham literature produced several articles on scanners. Since a small, simple and inexpensive unit was what I wanted, I planned a circuit which used a minimum number of parts, avoiding expensive or difficult-to-obtain ones.

Due consideration was given to TTL devices, but I chose CMOS, because the diode matrix in the Icom operates on 9.7 volts, and my car and home power supplies are 12/13.8 volts. Using TTL devices would necessitate a drop to 5 volts and associated dissipation and loss. The use of CMOS devices fits right into place, because they provide the right voltage to interface and no critical voltage regulator is needed.

Study of the matrix circuit for synthesizing a channel in the Icom 22S showed that only a single-pole switch is used and that only plus 9.7 volts is applied through this switch. Searching for electronics to do this, I found that the CMOS CD4017 decade counter/decoder with its inhibit gate fulfilled the requirements so well that it might have been specifically designed for this project. A CD4022 divide-by-8 counter would serve just as well, but was not on the local dealer's shelves. The counter portion provides the timing pulses. The decoder portion provides the proper sequential scanning pulses.

The 10 decoded outputs are normally low, and go high only at their respective decimal time slots. The simple reset allows you to choose any number of scans per cycle. I chose four, as that covers the main statewide repeater, a local island repeater, a local open private repeater with autopatch, and the municipal repeater. To get four scans, the 4th pulse is fed back to the reset terminal. There is an SPDT switch on each channel so that another set of four channels could be scanned (or any combination of channels desired). This system works well here, as the normal repeaters drop out when you travel to the opposite side of the island, and other repeaters come within range. I generally switch one of the quieter channels to monitor the 52 simplex frequency.

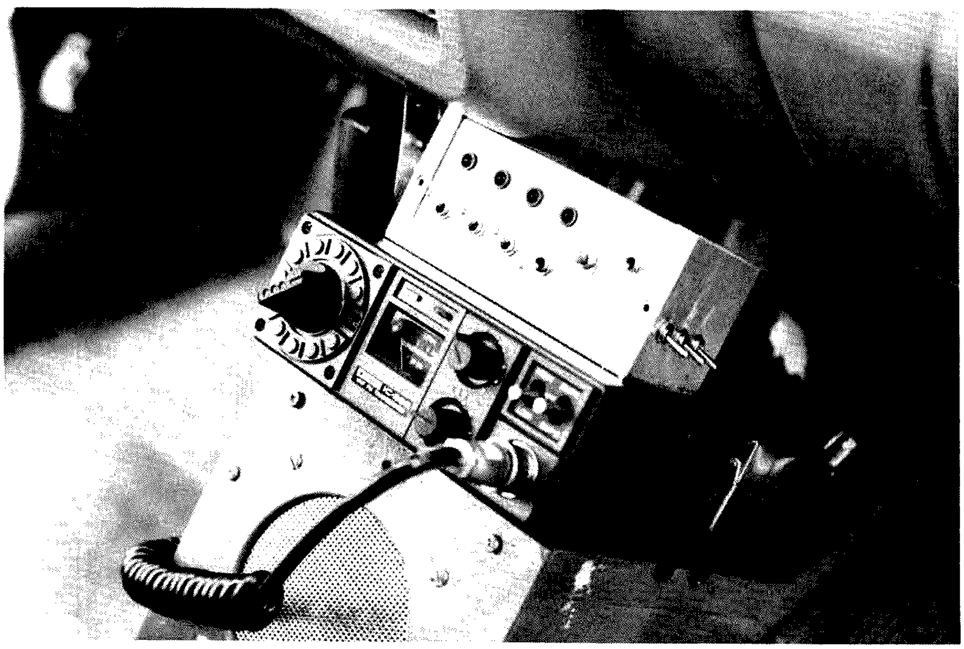

An explanation must be made here. During normal operation with the switch in the Dup A position, the regular frequency matrix table cannot be used for 146.520 MHz. For true simplex operation, the switch must be moved to the center position. Although this could be done with added circuitry, I felt that it would be too involved for the simple scanner I had in mind. Fortunately, KH6IEL came to the rescue at this time and reported that he had experi-

mented and found that his 22S could be programmed down to 145.350 and up to 148.200 and still maintain lock. With this information, a channel was programmed for 145.920 which, with the switch in the Dup A position, gave a receive frequency of 146.520 MHz. This position is used for receive only. The scanner can then monitor 52 without an added circuit to control the Dup A switch. However, when answering on 52, the scanner is disabled and the transceiver is switched to a channel that is programmed for 52 in the normal manner (and is operated in the normal manner).

A big plus for the CD4017 in this unit is that the decoded outputs are normally low and go high only at their respective decimal times. It is thus possible to directly activate each scanned channel with the decoded output without need for further electronics or relays. The simple reset circuit allows you to choose any number of scanning positions up to 10. There is an inhibit gate, which is what is needed to stop the scanning on receipt of a signal. The whole scanner is built around this one chip. A second chip with dual 555 timers completes the unit. I used two 555 timers in a 16-pin socket. One timer is used as an oscillator to create the timing pulses and the other is used as a holding delay timer so that the scanner does not start between transmissions.

The unit is constructed on a piece of 2 x 4½-inch perforated board with .1-inch spacing. This is packaged in a 2¼" x 2¼" x 5" minibox and attached to the top of the transceiver. The 4 LEDs indicate the channels and the scanning rate. One switch below each LED permits switching to an alternate channel. The push-button is used to advance the scanner when it it locked to a station. The last toggle switch is used to stop the scanning and to

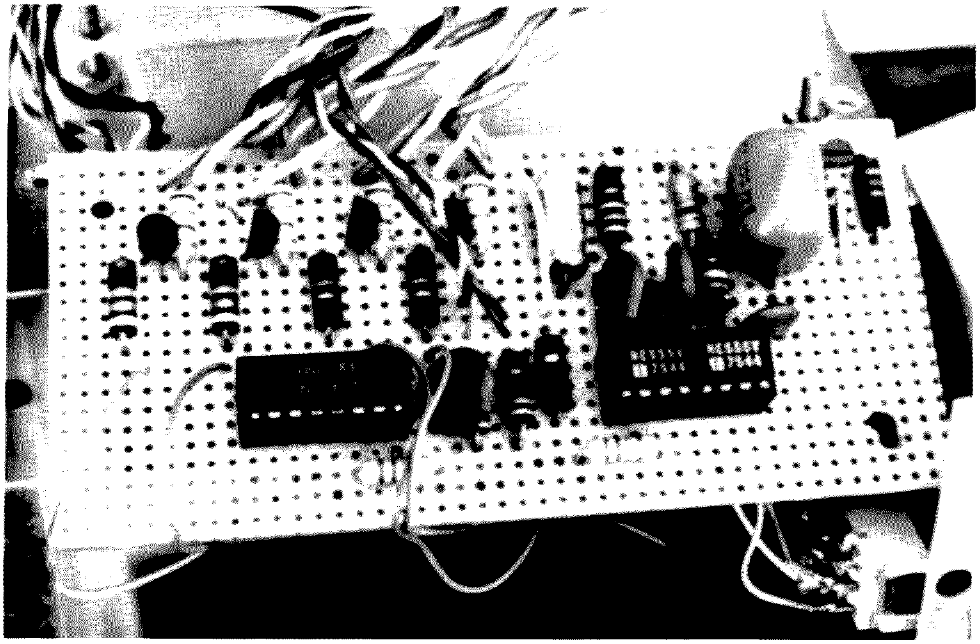

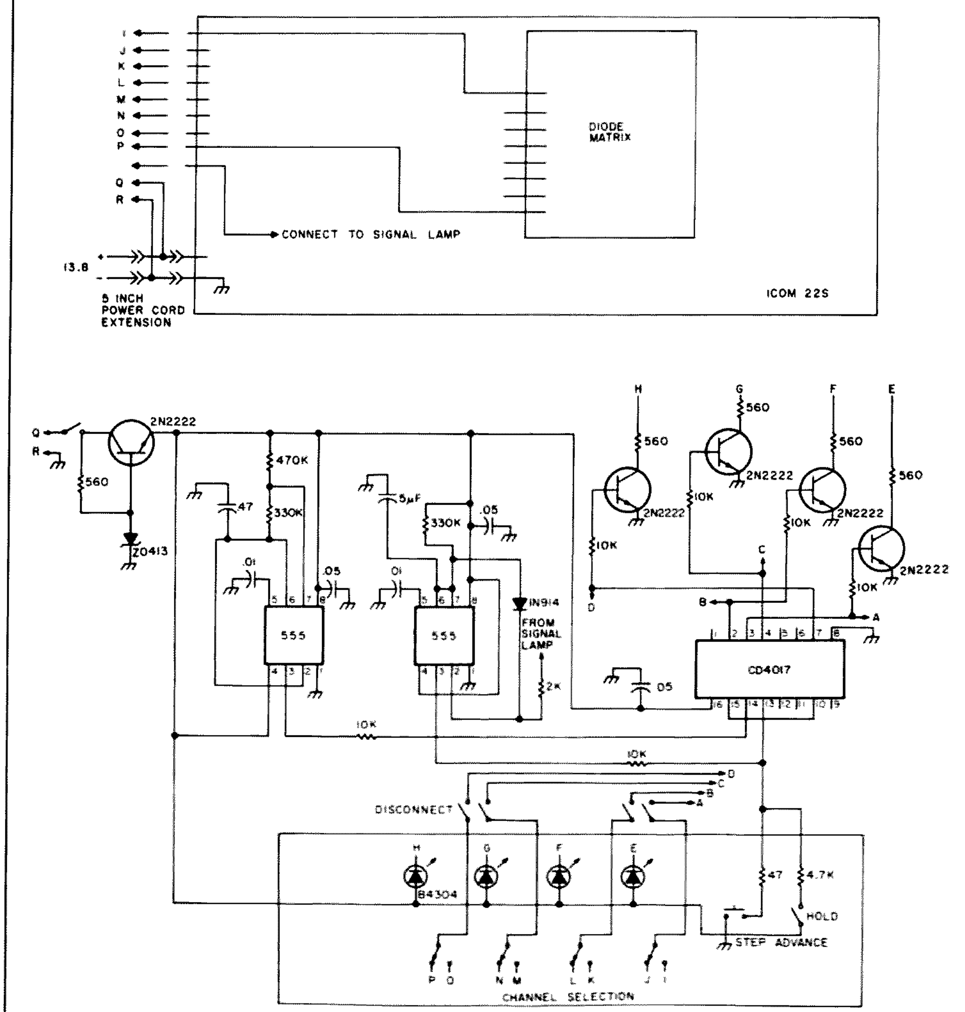

Fig. 1. Scanner.

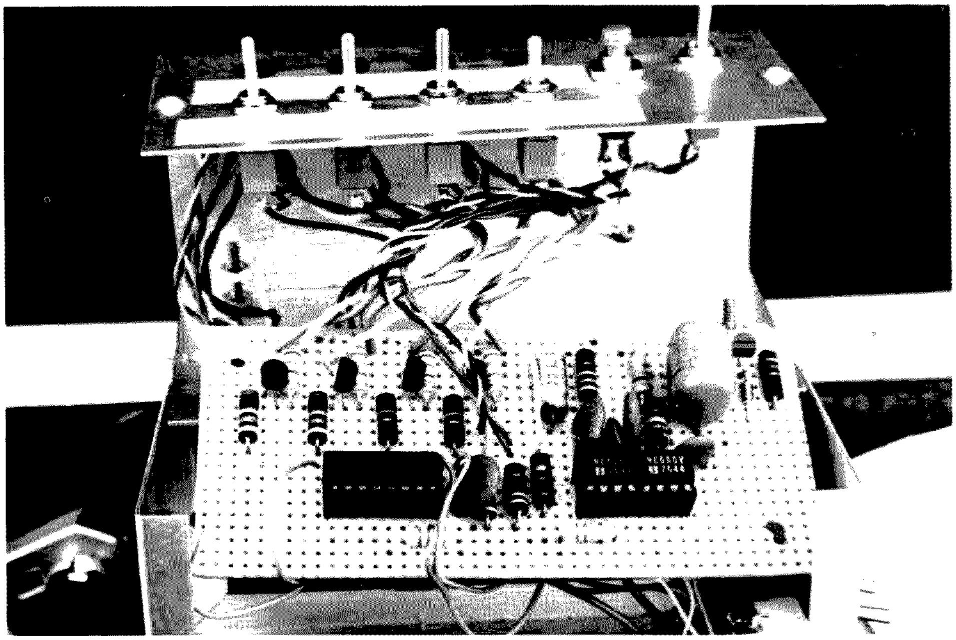

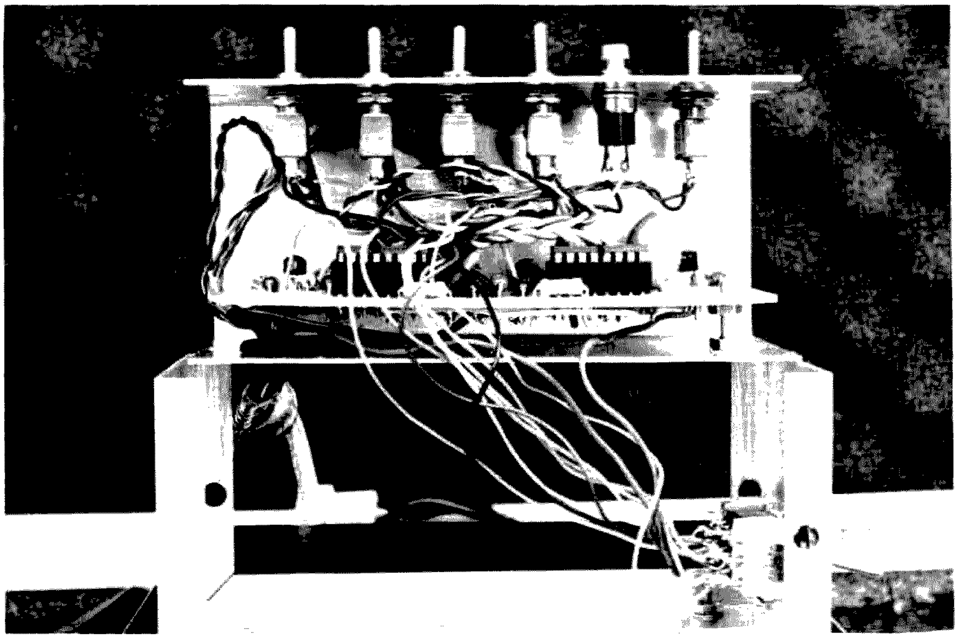

keep it locked on the desired channel. It is also used when transmitting. There are a power switch and two other switches on the right side. The other two switches are DPST switches which disconnect the four lines which are directly connected to the decoder terminals. I found that going to regular operation while the scanner was still connected, although with power off, interfered with normal operation. Operation is okay with the scanner on channels tied to the scanner, except 52. On 52 and the remaining channels, the disconnect is necessary. The switches are used to completely isolate the scanner when not in use. This operation is simplified, since the switches are grouped together with the power switch, and all three are operated in one motion. If a DPST switch is used for the power switch, the added pole can be used to switch another line, making it possible to scan 5 channels and disconnect. Of course, the reset must be changed and another LED and transistor driver added.

There are 9 pins on the accessory socket. The original ground and metering leads were removed. One pin is used for the lead to the signal light return line. When a signal is received, the signal light goes on, and the line goes low. This low is used to trigger the delay timer. The delay timer presents a high on pin 13 of the 4017 counter/decoder. This inhibits the counter and stops the scanning. The 8 pins are used to bring the 8 desired channels on the diode matrix board out to the scanner.

Prior to the construction of the scanner, a short 5-inch extension was made for the power cable. It was difficult to plug in the power cable each time the transceiver was moved from house to car and vice versa. With the extension, it is a simple matter to grab the two pieces and push them together. The power leads for the scanner were taken from this extension, since it remains with the transceiver. It might be mentioned that there are two more possible connections for lines, as the power plug has two unused positions. Just add the pins which you would have if you bought the plug package to make the extension cable. The leads between the scanner and the transceiver are enclosed in a shield obtained by stripping a short length of RG-58 cable. The step advance jumps, but, with practice pressing at the approximate scanning rate, movement is fairly consistent. An alternate method would be to hold the button down, scan a full cycle, and release at the desired position. With the R and C values installed, the duration of scan on each channel is slightly less than ½ second. The delay after a carrier goes off is slightly over 2 seconds.

When the power switch and the two companion disconnect switches are turned to the off position, the 22S is returned to its original unaltered condition with all 23 frequencies, switches, etc. operating normally as though nothing was ever done to it.

I wish to thank KH6IEL for his encouragement and help. He provided the information on the expanded frequencies and the method of actuating the delay circuit of the 555 timer. His enthusiasm made it possible for me to complete this project in record time. I also wish to thank Jan Kaneshiro, one of KH6IEL's co-workers, for taking the photographs. ■

William Vissers K4KI
1245 S. Orlando Ave.
Cocoa Beach FL 32931

Cool It!

-- with a matching unit

Having had the unique distinction of being told I was an idiot during my first day at school, I sort of feel I'm a bit simple, and, as such, need things simply explained. That's why a very erudite and learned article titled, "Another Look at Reflections," which appeared in the August, 1976, issue of *QST*, had me unglued again. The author, M. Walter Maxwell, is listed as Engineer, Chief of Space Center Antenna Laboratory and Test Range, Astro-Electronics Division, RCA Corporation. Both the tone of the article and its technical content had me a bit confused. My own feeling about such articles is that technical complexity can often mask basic principles and understanding.

So as an old-time ham, I thought it might be interesting to review, in perhaps a different manner than that taken by M. Walter Maxwell, some of the basics of swr, reflections, the matching unit, and transmitter efficiency, as culled from experience and a few simple equations.

The Experimental Approach

There are often times when a simple experimental approach to a problem will clearly illustrate basic principles. This is evident in the somewhat complex mathematics of a nonresonant antenna, a transmission line, forward and reverse power, swr, and the impedance matching network required to obtain maximum power output with the best transmitter efficiency. And, with the proper use of a matching unit, your rig will run a lot cooler.

Of the ham bands from 160 to 10 meters, 80 meters has the highest frequency bandwidth to the center band frequency. This is easily calculated as being (4.0 - 3.5)/3.75 x 100, which equals 13.3%. The frequencies are indicated in MHz. This high percentage is why we generally have a high swr at these band edges when we are resonant near the center of the band. The resultant mismatch obtained at the band edges leads, also, to high reflected power. And, unless the antenna system is properly matched to the transmitter, there will be a considerable drop in transmitter efficiency. This simple experiment will show that this loss of efficiency can be easily determined, measured, and corrected.

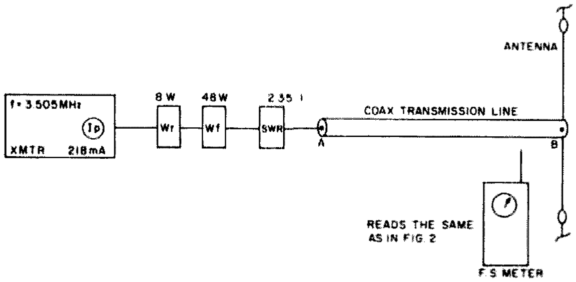

Fig. 1.

Equipment and Basics

The tests were made and data obtained using my Yaesu FT-101B, a couple of Swan WM-1500 wattmeters, capable of reading both forward and reverse power, and an swr meter borrowed from an amateur friend. A home brew rf bridge and a simple field strength meter were used to cross-check results, but these two items are not necessary to do the tests outlined. It is necessary to read the final amplifier cathode current meter for all conditions of test.

My own 80 meter inverted vee dipole is quite typical of the kind of antenna in general use by many amateurs. After a certain amount of pruning, my antenna system was resonated at 3.75 MHz. The resonant resistance measured very close to 50 Ohms on my bridge. I built the matching unit, but any good commercial unit will show the same results of better transmitter efficiency.

Math, Calculations, and Test Criteria

The only mathematics you'll really need and use are a basic equation and an efficiency calculation. But, as addenda, I'll show a couple of simple equations that relate swr, forward power, and reverse power. And I'll also include a small chart showing the relationship between forward power, reverse power, and actual power into the transmission line as a function of swr. This will enable anyone who is so inclined to pursue this interesting experiment a bit further, by performing tests on his own equipment.

Our basic equation is $P_o = P_f - P_r$, where P_o is the actual rf power delivered to the coaxial line feeding the antenna at point A of Figs. 1 and 2. P_f is the forward power measured by a wattmeter, and P_r is the reverse power measured by a wattmeter. This equation is easily proven by a couple of measurements with a field strength meter.

To illustrate the loss of efficiency when a matching unit is not used, the curve of Fig. 3 shows a plot of percentage of extra power required against swr for a constant power output to point A from the transmitter. A point on this curve is completely calculated, using my measurements. This technique will enable anyone to duplicate this experiment and validate his own results.

Always adjust the system so that you get a true power

output of P_o equals 40 Watts at point A. For every reading, always properly load the transmitter by adjusting for the minimum cathode current, using the tuning and load control knobs on the transmitter. The matching unit will also always be properly adjusted whenever it is the circuit. The transmitter output of 40 Watts can readily be adjusted by controlling the amount of rf drive to the final output stage amplifier.

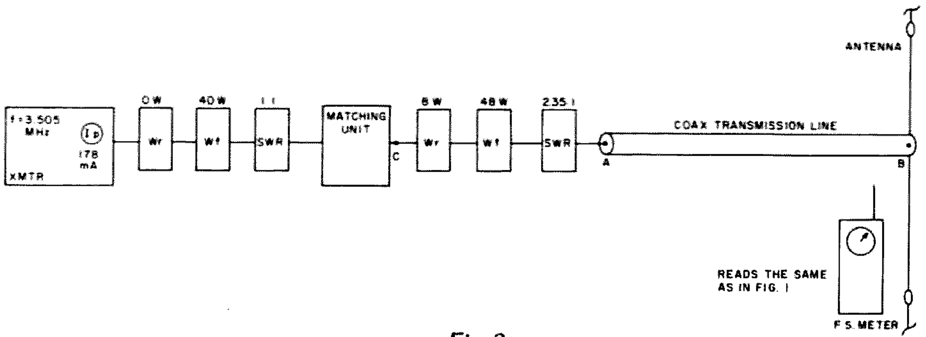

Fig. 2.

The Experiment

The transmitter and meters are connected to the configuration in Fig. 1. The transmitter is set to the resonant frequency of the antenna. In my case, this was 3.75 MHz. At resonance, as you would expect, the swr is 1:1, and the reverse power is zero. I adjusted the power output, as read on the wattmeter reading forward power, to 40 Watts. The cathode current on the transmitter reads 160 mA. Now, still using the configuration in Fig. 1, the transmitter is set to a frequency of 3.505 MHz. The transmitter is tuned for minimum cathode current and adjusted to give 40 Watts of rf power to point A on Fig. 1. However, from the basic equation of $P_o = P_f - P_r$, you can see that you have to adjust the drive until $P_r - P_r$ is equal to 40 Watts. This occurs for my own setup when P_f is equal to 48 Watts and P_r is equal to 8 Watts. The swr meter reads 2.35:1.

Here is where the surprise comes in. The cathode current, at its minimum dip, reads a whopping 218 mA. Could this much higher cathode current be caused by a higher power loss in the transmission line? The answer is no. First of all, we are measuring the rf input to the transmission line at point A in both cases, and it was 40 Watts each time. And, interestingly enough, the wattmeters don't even know that there is any loss on the transmission line. Secondly, a look at loss charts for coax lines from the *ARRL Antenna Handbook* shows the following: For a 100-foot length of RG-8/U cable at 3.5 MHz, the loss, at an swr of 1:1, is .3 dB. At an swr of 2.35:1, the total loss increases to .43 dB.

When these dB loss figures are translated into transmission line power loss referenced to our 40 Watt level, we find the transmission line losses are quite low. The total power loss, at an swr of 1:1, is 2.7 Watts, and the total loss, at an swr of 2.35:1, is 3.8 Watts. This shows that the difference in loss between an swr of 1:1 and an swr of 2.35:1 is only 1.1 Watts. This small difference is not what causes our cathode current to rise to such a high value at an swr of 2.35. This high current, with the resulting loss of transmitter efficiency, occurs because the transmitter is not operating into the 50 Ohm resistive load it was designed to operate into. In other words, the transmitter is not matched to its load.

To increase transmitter efficiency, all you have to do is to look at Fig. 2, where I have inserted a matching unit. The function of the matching unit is to take whatever impedance is seen at point A of the transmission line and transform it into a 50 Ohm resistive load at the transmitter rf output connector. The matching unit, when properly adjusted, effects a conjugate match at point C of Fig. 2, to obtain maximum power transfer from the transmitter to the coaxial line/antenna system.

In Fig. 2, I have also added a couple of wattmeters and an swr meter to the right of the coupling unit to prove that reflected power is not a transmission line power loss.

Using the configuration in Fig. 2, and with the transmitter set to 3.505 MHz, start loading out. By simultaneously adjusting the tuning and load controls of the transmitter, and properly adjusting the matching unit, you easily obtain an swr of 1:1 on the swr meter to the left of the matching unit. The associated wattmeters are read for forward and reverse power. The reverse power meter reads zero. Now the transmitter drive control is adjusted until the forward power meter reads 40 Watts. And, as P_r reads zero, P_o, or true output power, is read on the forward power meter and reads 40 Watts. Now read the cathode current meter. It reads only 178 mA. This is certainly a lot lower than the 218 mA we read without the matching unit being in, for the same rf power output of 40 Watts to the coax cable at point A.

It's easy to calculate how much extra power you use percentagewise when comparing the two cathode current readings. Knowing that power varies as the square of the current, simply divide 218 mA by 178 mA and square it, which equals 1.49. Then subtract 1 from 1.49, and you obtain .49. Now multiply .49 by 100, to get 49%. What this says is that, without the matching unit in at 3.505 MHz, you need 49% more power to get the same 40 Watts of true rf output, as compared to when the matching unit is in. This is not theory, but is based upon actually-measured values. And this 49% extra power only heats up your transmitter that much more. This is one of the basic reasons why most transmitter manufacturers tell you not to operate their transmitter into a high swr load. Another un-

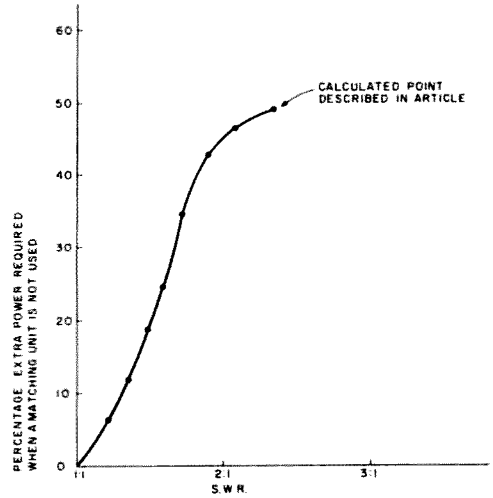

Fig. 3. Swr/extra power curve.

Swr	P_f	P_r	Actual Power $P_f - P_r$
1:1	40	0	40
1.5:1	41.67	1.67	40
2:1	45	5	40
2.5:1	49	9	40
3:1	53.3	13.3	40
4:1	62.5	22.5	40
5:1	72	32	40
6:1	81.7	41.7	40
7:1	91.4	51.4	40
8:1	101.3	61.3	40

Table 1.

desirable result, when operating your transmitter into a high swr load, is that higher rf voltages are developed in your transmitter for the same true power output. These higher voltages and currents can easily cause considerable damage to your rig.

Efficiency Curve and Final Surprises

The 49% excess power at an swr of 2.35:1 is one point on the curve of Fig. 3. It is easy to complete the curve by taking various frequencies between 3.505 and 3.75 MHz and measuring swr and cathode currents with and without the matching unit in the system. The efficiencies were calculated the same as in the example just cited. As expected, at the lower swr values the swr decreases along with the reverse power measured. At 3.75 MHz, the cathode current reads 160 mA at an swr of 1:1, whether or not the matching unit is in the circuit. This is the resonant point of the antenna, and no matching unit is needed. The really important thing is that a good matching unit can really pay off in increased efficiency and a lot cooler rig.

And now for the final surprises. First of all, in Fig. 2, everything was left properly loaded out and matched at 3.505 MHz. The wattmeters to the left of the matching unit read 40 Watts forward power, zero Watts reverse power. The swr meter reads 1:1, and the cathode current is 178 mA. Now, without touching a thing, look at the wattmeters to the right of the matching unit. The swr reads 2.35:1, the forward power reads 48 Watts, and the reverse power reads 8 Watts. And 48 minus 8 is equal to 40 Watts, which is the actual power going into the coaxial line at point A. This is the actual power available to the antenna, less the small transmission line loss that we calculated earlier.

The actual power at the antenna at point B is 40 minus 3.8, or 36.2 Watts at 3.505 MHz. The antenna power at 3.75 MHz is 40 minus 2.7, or 37.3 Watts. The difference is only 1.1 Watts, as seen earlier. The 1.1 Watt difference was so small that I could not detect it using my field strength meter for the measurements I'm going to talk about now.

The last step is to prove that $P_o = P_f - P_r$, and that reverse power is not a transmission line power loss. With the transmitter set up at 3.505 MHz, load up for 40 Watts rf output with the matching unit in the circuit. On the meters to the left of the matching unit the forward power reads 40 Watts, reverse power reads zero, and the swr is 1:1. The plate current is 178 mA. Set up a simple field strength meter at a suitable location, and note the deflection. Now take the matchbox out of the circuit, as per Fig. 1. Retune until you get a P_o of 40 Watts. As before, P_f is 48 Watts, and P_r is 8 Watts. The swr is 2.35:1, and the plate current is back up to 218 mA. When you go back out to the field strength meter, you'll see that there is no detectable change. This proves that reverse power is not a transmission line loss. As a final clincher, to prove that forward power is not true power output at an swr different than 1:1, go back to the transmitter and reduce the drive until the forward power reads 40 Watts. The swr is still 2.35:1, as you have not changed any of the tuning adjustments of the transmitter frequency. The reverse power reads 6.5 Watts. If the theory is correct the actual power output will be 40 minus 6.5, or 33.5 Watts. A quick trip to the field strength meter indicates exactly such a drop in field strength. The field strength meter had originally been cross calibrated, in terms of relative power output, for this experiment. This final step proves that $P_o = P_f - P_r$.

Addendum

It should be noted that some amateur transmitters are able to both tune their final stage and provide a matching action at the same time, over a generally limited frequency and swr range. This is a function of transmitter design. It can readily be checked by, first, loading up into a proper dummy load, and measuring the cathode current. Then, without changing frequency, the transmitter is loaded into the antenna system without the use of the matching unit, as per Fig. 1. If the cathode current at this time reads the same as it did for the dummy load, and you have the same power output P_o, where $P_o = P_f - P_r$, the transmitter is acting as its own matching unit, even though the swr is not 1:1.

However, this type of matching, from my own personal experience, is the exception rather than the rule. My own Yaesu FT-101B, and other somewhat similar transmitters, indicated that a good matching unit is essential to obtain the best efficiency, when tuning into a nonresonant antenna system. And as we mentioned earlier, a good matching unit will also protect your valuable transmitting equipment from dangerous voltages and currents.

A final and interesting point can also be noticed — At high swr values, both the forward and reverse power can be larger than the true power output of the transmitter.

Table 1 shows an actual power output of 40 Watts, along with forward and reverse power tabulated for values of swr from 1:1 to 8:1. This tabulation also shows that forward power readings alone, at high values of swr, can be very misleading. For example, from the chart, at an swr of 5:1, we would read forward power as 72 Watts. Although we might think we were getting 72 Watts output, this is not the case, as, at this swr, the reverse power is 32 Watts, and our actual true power output is the difference, or only 40 Watts. We also see that, at any swr of more than 6:1, both our forward and reverse powers are actually more than the true power being delivered. The basic equations relating swr, forward power, and reverse power are as follows:

$$\text{Swr} = \frac{1 + \sqrt{\frac{P_r}{P_f}}}{1 - \sqrt{\frac{P_r}{P_f}}}$$

$$P_r = P_f \left(\frac{\text{swr} - 1}{\text{swr} + 1}\right)^2$$

These equations are useful in the event that a wattmeter, which reads only forward power, and an swr meter are available. The reverse power can easily be calculated.

I hope that this simple experiment will enable you to better understand the more rigorous mathematical approach, which often, unfortunately, complicates a basically simple problem. And for the purist in these matters, it is to be understood that there are some very minor second order effects that in no way affect the basic validity of this experimental approach. ■

Eugene F. Ruperto W3KH
RD1, Box 166
West Alexander PA 15376

Weather Satellite Pix Printer

Several articles have been published in the past describing various readout devices for weather satellite photographs. They were basically divided into CRT or drum recorders. This article deals primarily with the latter, although the video circuitry may be used in conjunction with a CRT display.

	3000 Hz cutoff	5500 Hz cutoff
C1	.028 uF	.015 uF
C2	.084 uF	.046 uF
C3	700 pF	382 pF
C4	.153 uF	.064 uF
C5	.80 pF	98.6 pF
C6	.053 uF	.03 uF
C7	668 pF	365 pF
C8	.028 uF	.016 uF
C9	.0063 uF	.035 uF

Table 1.

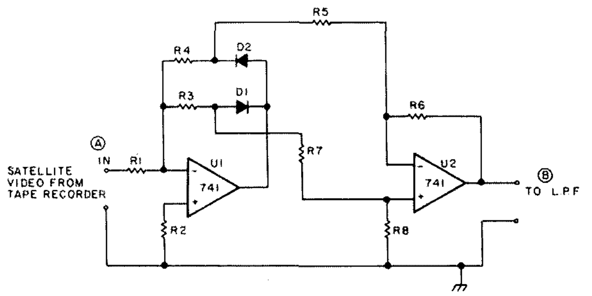

Fig. 1. Full wave rectifier circuit.

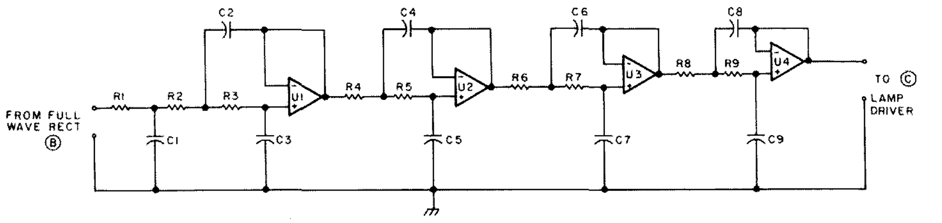

Fig. 2. Noninverting, unity gain, low pass, .5 dB ripple, Chebyshev ninth order satellite subcarrier filter.

It was interesting to follow the changes in circuitry from that in K2RNF's device to that in WB8DQT's series published in this magazine.[1,2]

I tried several circuits, with some measure of success, before I decided on what I considered optimum. WB8DQT's 12AU7 amplifier was replaced with an op amp. The full wave transformer detector and the lamp driver, normally a 6CL6, was replaced with a straightforward transistor circuit. Another op amp and IC hybrid chip make up the drum driver, which normally weighs in the neighborhood of thirty pounds with its large choke, transformers, and 12AU7/6550 tube complement. Another novel circuit change was to replace the satellite subcarrier filter with a state-of-the-art active filter, instead of using the choke/capacitor combination that has been used in the past. As a final touch, Cawthon designed a lamp carriage drive with pulleys and stainless steel wire to replace the threaded rod method, which completely eliminates line pairing, a bane to the perfectionist.

Construction

I preferred to use modular construction for its ease of testing after completion. The modules were divided into preamp and full wave precision rectifier, low pass filter, dc amplifier and lamp driver, and, finally, the drum motor amplifier. The modules were constructed on PC boards using standard techniques, with molex pins for the ICs. The amplifier hybrid chip was mounted with Dow 340 on a .09-inch perforated aluminum plate for a heat sink, and then bolted over a 4-inch square cutout in a chassis. A muffin fan is used to further cool the arrangement – it will run for several hours without heating. A good grade of capacitor is recommended for the low pass satellite subcarrier filter, since we are using a ninth order, .5 dB ripple, Chebyshev filter. Since I ended up with strange values of capacitance, due to the formulas involved, the final capacitance, in most cases, was arrived at by paralleling two or more. The higher the order (number of poles) involved, the more likely you are to run into failure. A fifth order filter, consisting of two op amps, should work nearly as well.

Circuit Description

The first op amp in the full wave rectifier circuit is a conventional half wave rectifier, with the output of each diode opposite in phase. The two out-of-phase outputs are fed into the second op amp, which has the function of a summing amplifier. The output will be a symmetrical full

wave, if all resistors associated with the summing amplifier are equal. The video information from the satellite is 0-1500 Hz, with the blacks being low and the higher end of the spectrum corresponding to white.

After rectification, the video becomes 0-3000 Hz, and the satellite subcarrier doubles to 4800 Hz. By designing an active low pass filter with low ripple and a sharp cutoff near or above 3000 Hz, we can effectively eliminate the subcarrier. Since Cawthon and I operate fundamentally on two different modes, it was decided to use two filters – one with a cutoff near 3000 Hz, and the other with a cutoff near 5500 Hz. The reason for the latter is that my equipment is operated on playback at 192 rpm (a multiple of four times the present NOAA scan rate), which effectively cuts down on the time needed to reproduce a picture and allows for a large format with line blanking. I record a pass at 3-3/4 ips and play back at 7-1/2 ips. Cawthon uses the 240 lpm scan rate associated with SMS GOES WEFAX transmission, using format compatible with the older ESSA-8 and ATS geosynchronous satellites, where pictures were normally three minutes long and no line blanking was required.

With this method, playback at unity, the lower frequency filter will suffice. At twice the playback speed, the higher frequency filter is required. The preferred method is to build both and switch them for station flexibility. Table 1 provides capacitance values for both modes of operation. The resistors in all cases are 10k 1%.

The dc amplifier following the low pass filter provides gain and isolation to the 2N3440 transistor lamp driver. In the first stage, some gain was required and could be controlled by the value assigned to R2. Some experimentation was required to determine where to place the line blanker pulse for interlace operation. Through trial and error, I found that the -10 volt pulse does a good job at the inverting input of the first stage at the junction of R1 and R2. In the quiescent state, the 2N3440 is biased to draw maximum (black) current through the adjustment of R10. I use an R1166 glow modulator tube, which has a slightly larger crater size than the R1166 and requires slightly more current. This circuit has a dynamic range of about 10 mA swing and works very well with Kodabrome FH paper.

The drum driver amplifier consists of a novel arrangement in that the input stage is tuned for the desired output frequency, rather than a large value high current choke in the final stage, as was used with the 12AU7/6550 or 6DQ5 arrangement. Two values are included, for either 48 Hz or 60 Hz operation. The sine wave output is fed to a Sanken hybrid amplifier of your choice (they range in wattage from ten to fifty with corresponding prices), amplified, and fed to the drum motor through T1. Unless you decide to stick with one mode of operation, a duplicate system should be built for the lamp carriage drive. Synchronous motors will grind, at half speed, at 30 Hz.

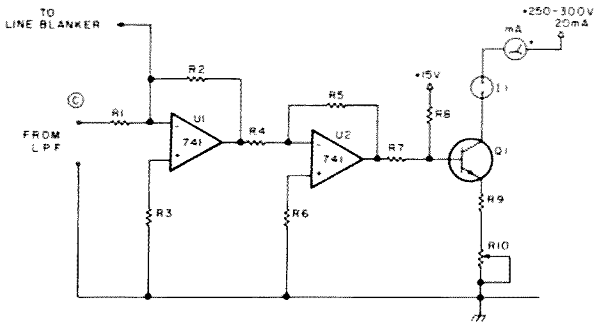

Fig. 3. Dc amplifier and lamp driver.

Operation

Adjust R10, the 1k pot in the lamp driver circuit, for desired maximum black current. The satellite signal is fed from the tape recorder to the input of the rectifier circuit. Depending on the signal level from the recorder, a variable gain 741 op amp may have to be added to optimize the signal level. If possible, monitor the dc signal level at the base of Q1 or the junction of U1 or U2 at the inverting input. If a dc scope is not available, watch the lamp current meter for fluctuations to average the midscale between maximum black and maximum white. This should provide a starting point. The 2N3440 runs hot enough to leave a scar on the index finger at 15 mA, even when heat sinked, so don't leave it in this condition for more than a few seconds when testing. For the sake of brevity, reference oscillator circuits, phasing circuits, and line blanker have been omitted, since they have been described adequately in previous articles. Notice the absence of gamma correction circuits. For those lucky enough to receive data from SMS GOES, no gamma correction is necessary. For the polar-orbiting NOAA variety, the daylight visible spectrum transmissions need little or no correction. Night or day IR are seldom recorded at this station.

Some More Ideas

The circuits described are

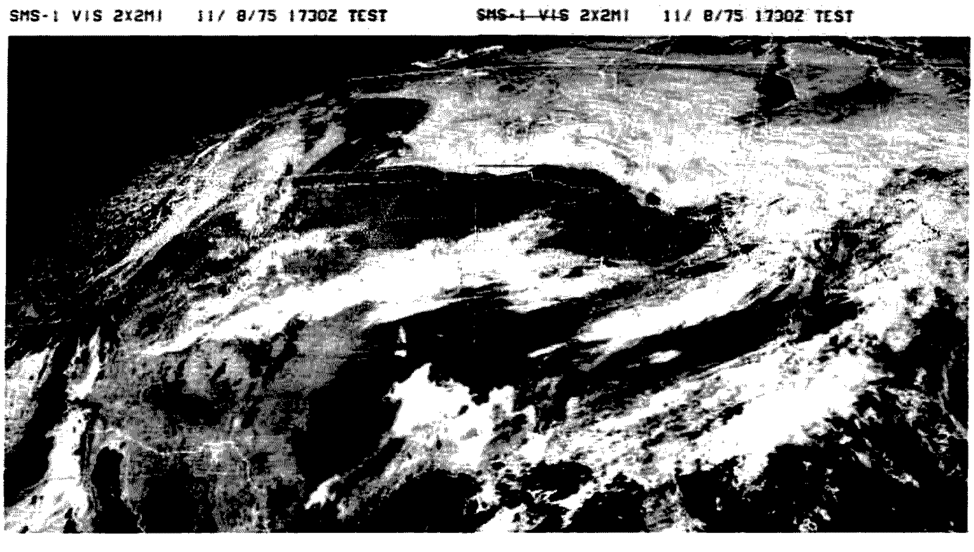

Cawthon print. Note the absence of lines or line pairing. Drum speed – 240 rpm. No line blanker.

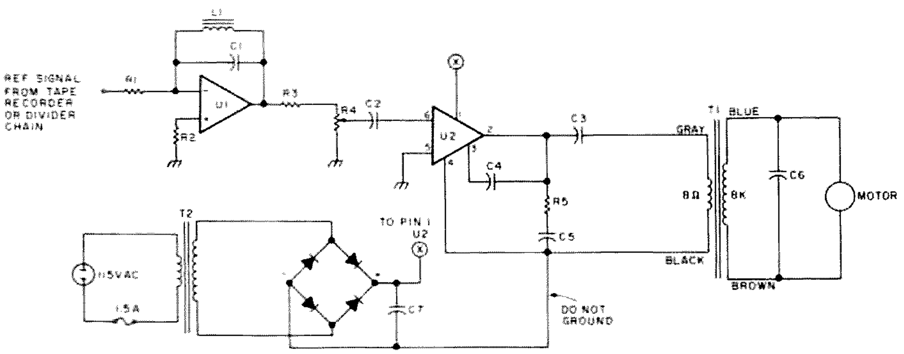

Fig. 4. Drum/carriage motor drive circuit.

by no means the ultimate, although they appear to shove the tube circuits further out of the picture and should encourage some new ideas. The rectifier/summing amplifier can be further simplified and miniaturized by using an ILD-74 optoisolator (costs about one dollar) that consists of two LEDs optically coupled to two transistors, and gives a good linear response up into the MHz region. It comes in a DIP package. Tie pins 2 and 4 together for signal input, and ground pins 1 and 3. Tie pins 6 and 7 together and connect to Vcc (5 V). Tie pins 5 and 8 together and use a 470 Ohm resistor from there to ground. A beautiful, symmetrical, full wave rectified signal can be obtained at the junction of pins 5 and 8 and the 470 Ohm resistor. This circuit can also be used following a low pass filter to use the 300 Hz sync pulses from the satellite for an auto-phase system, to eliminate manual phasing. I noticed some laser diodes on the market, selling for about eight dollars, that are capable of high currents when pulsed. Although I am not sure how IR light will affect photographic paper (it is normally insensitive to red, amber, and green light), a laser diode with a fairly high duty cycle may have some application in this respect. The high cost of a glow modulator lamp ($49.50 at this writing) would have some of us look into a less expensive light source.

With the coming generation of geosynchronous satellites operating in the GHz region, I would welcome some ideas from the UHF gang on a 1691.0 MHz to 137.5 MHz simple converter to access the current SMS GOES daily WEFAX broadcasts. Cawthon had the first and only amateur 1691.0 MHz station in existence. The front end, however, consists of commercially-built or modified commercial equipment. Reception is by a ten foot aluminum spun dish at fixed azimuth and elevation. I will be happy to answer questions pertaining to the project, but please be good and send an SASE, or arrange a sked with me on any band except 160 meters. ■

Night IR shot. Note Hurricane Belle in lower portion of picture (with pronounced eye).

References

[1] "Amateur Reception of Weather Satellite Picture Transmissions," Anderson K2RNF, *QST*, November, 1965.
[2] "A Satellite Fax System You Can Build," Taggart WB8DQT, *73*, Sept., Oct., 1975.
[3] "A Satellite Receiver in the Home," Ruperto W3KH, *Scientific American*, Jan., 1974.
[4] "Tables Speed Design of Low Pass Filters," Farouk-Al-Nasser, *EDN*, March 15, 1971.

Parts List

Fig. 1:	
R1 through R8	10k, 1% ¼ Watt
U1, U2	741
Fig. 2:	
All resistors	10k, 1% ¼ Watt
Fig. 3:	
R1 through R5	10k, ¼ Watt
R7	2.2k
R8	3.3k
R9	330 Ω
R10	1k pot
U1, U2	741
Q1	2N3440
I1	R1166 or R1168
mA	0-25 mA milliammeter
Fig. 4:	
R1, R2, R3	10k, ¼ Watt
R4	5k pot
R5	10 Ω, ¼ Watt
C1*	1.8 uF
C2	.1 uF
C3	2200 uF, 50 V
C4	50 uF, 50 V
C5	.05 uF
C6	motor cap
C7	2200 uF, 50 V
T1	Stancor A-25, 8 Ω PRI, 8k sec, 10 Watts
L1	4 H

*For 60 Hz; for 48 Hz – 5.2 uF.

operation occurs many times throughout the program run. Notice that many previous choices can become unacceptable. As the program proceeds we are, in effect, refining the decision-making process.

An Example Program

A crossword puzzle, although suited to a backtracking solution, is too extensive for small systems, and the needed heuristics are almost impossible to program anyway. My specific example is, then, a program that will set up an ordinary addition of two four-digit numbers. Obviously, the sum must contain either a four- or five-digit number. If the sum, indeed, has five digits, the most significant digit (the leftmost digit) is always a one. Try it. This is always true.

The input to the program is a series of letters, such that the sum row obeys the rule of addition. A specific letter can never represent more than a single number and vice versa. The program as presented here will generate all the solutions to a problem if, in fact, any do exist! Look at this example:

```
  SEND
+ MORE
------
 MONEY
```

This has only one solution (i.e., M = 1, O = 0, N = 6, E = 5, Y = 2, R = 8, S = 9, D = 7). Then the program will output:

```
  9567
+ 1085
------
 10652
```

This specific puzzle, by the way, consumed over 9 CPU seconds on an IBM 370/168 running Dartmouth BASIC.

How It Works

Except for some fine points, the program's operation can be seen in the flow diagram. The P$ array contains the letters representing the problem. It is a 5 x 3 rectangular array, and, therefore, the most significant digit of each addend must be a blank. The leftmost digit of the sum must be input either as a blank or a letter. The T array is a stack that corresponds to the P$ array in the following manner: If a letter has been assigned a number in the P$ array, a 1 is stored in its corresponding position in the T array. The S array is the answer stack and is printed out whenever a solution is complete. The I, U, and V arrays are used to determine acceptability.

The program substitutes digits for letters in columns only. The rightmost column is processed first, and the processing proceeds to the left until all columns are accepted. If a choice eventually leads to a dead end, the previous column is deleted (popped off the answer stack). This is analogous to

```
001 REM -- AN EXAMPLE OF A BACKTRACKING ALGORITHM IN NON-RECURSIVE
002 REM -- FORM.                                  DON LANG : 5/77
003 REM
010 DIM P$(15),T(12,5),S(4,5),I(3),U(3),V(3)
020 Q=0
030 F=0
040 C=0
045 REM -- READ PROBLEM
050 FOR M = 1 TO 3
060  INPUT P$(M+12),P$(M+9),P$(M+6),P$(M+3),P$(M)
070 NEXT M
080 FOR J = 1 TO 4
090  FOR M = 1 TO 5
100   FOR N = 1 TO 3
110    S(J,M)=0
120    T((J-1)*3+N,M)=0
130   NEXT N
140  NEXT M
150 NEXT J
160 IF P$(15) <> " " THEN 810
170 Q=1
175 F=1
180 REM -- INITIALIZE SELECTION
190 J=-1
200 REM -- SELECT NEXT
210 J=J+1
220 K=-1
230 K=K+1
240 I(1)=J
250 I(2)=K
260 I(3)=I(2)+I(1)+C
270 E=I(3)
280 IF I(3) < 10 THEN 290
285 I(3)=I(3)-10
287 REM -- CHECK CHOICE FOR ACCEPTABILITY
290 IF Q < 4 THEN 340
300 IF P$(15) = " " THEN 330
310 IF E < 10 THEN 650
320 GOTO 340
330 IF E >= 10 THEN 650
340 A=1
350 IF A=4 THEN 410
360 IF T((Q-1)*3+A,Q) = 1 THEN 390
361 IF Q <> 1 THEN 363
362 IF P$(15) = " " THEN 374
363 D=Q-1
364 IF Q <> 1 THEN 366
365 D=1
366 FOR M = 1 TO D
367  FOR N = 1 TO 3
368   IF Q = 1 THEN 371
369   IF I(A) = S(N,M) THEN 650
370   IF P$(15) = " " THEN 372
371   IF I(A) = 1 THEN 650
372  NEXT N
373 NEXT M
374 A=A+1
380 GOTO 350
390 IF S(A,Q) = I(A) THEN 374
400 GOTO 650
410 FOR A = 1 TO 3
420  V(A)=0
430  U(A)=0
440 NEXT A
450 FOR A = 1 TO 3
460  R$=P$((Q-1)*3+A)
470  FOR B = 1 TO 3
480   IF A=B THEN 500
490   IF R$ <> P$((Q-1)*3+B) THEN 500
495   U(B)=1
500  NEXT B
510 NEXT A
520 FOR A = 1 TO 3
530  W=I(A)
540  FOR B = 1 TO 3
550   IF A=B THEN 570
560   IF W <> I(B) THEN 570
565   V(B)=1
570  NEXT B
580 NEXT A
590 FOR A = 1 TO 3
600  IF U(A)=V(A) THEN 620
610  GOTO 650
620 NEXT A
625 REM -- END ACCEPTABILITY CHECK
630 GOTO 740
640 REM -- CHOICE IS NOT ACCEPTABLE
650 IF K <> 9 THEN 230
660 IF J <> 9 THEN 210
664 REM -- IF K AND J NOT = 9,9 THEN SELECT NEXT ELSE
665 REM -- POP ANSWER STACK (CHOICES EXHAUSTED)
670 Q=Q-1
680 IF Q <= 0 THEN 950
690 K=S(2,Q)
700 J=S(1,Q)
701 IF Q <> 1 THEN 710
702 C=0
703 GOTO 650
710 C=S(4,Q-1)
720 GOTO 650
730 REM -- CHOICE IS ACCEPTABLE
740 C=0
750 IF I(1)+I(2)+C < 10 THEN 760
755 C=1
756 REM -- PUSH COLUMN ON ANSWER STACK
760 FOR M = 1 TO 3
770  S(M,Q)=I(M)
780 NEXT M
790 S(4,Q)=C
800 IF Q = 4 THEN 970
810 D=Q+1
815 G=Q+1
816 REM -- SEARCH STACK FOR ASSIGNED LETTERS AND SET THEM
820 FOR M = 1 TO 3
830  FOR X = G TO 5
840   FOR N = 1 TO 3
850    IF F <> 0 THEN 860
855    M=3
860    IF F <> 0 THEN 870
866    Q=5
870    IF P$((Q-1)*3+M) <> P$((X-1)*3+N) THEN 891
880    T((D-1)*3+N,X)=1
882    IF F = 1 THEN 885
883    S(N,X)=1
884    GOTO 886
885    S(N,X)=I(M)
886    D=D+1
890    IF D <= 4 THEN 880
891    IF F <> 0 THEN 900
892    Q=0
900    D=Q+1
910   NEXT N
920  NEXT X
925 NEXT M
930 Q=Q+1
932 IF F <> 0 THEN 935
933 Q=1
935 F=1
940 GOTO 190
950 PRINT " "
952 PRINT "END OF SOLUTIONS"
960 STOP
965 REM -- SOLUTION FOUND
970 PRINT " "
975 FOR M = 1 TO 3
980  PRINT S(M,5);S(M,4);S(M,3);S(M,2);S(M,1)
990 NEXT M
992 GOTO 650
993 END
```

erasing a word in a crossword puzzle when a down word doesn't match some intersecting letter of an across word. Feedback occurs whenever the answer stack is popped, since a previous column is then remembered, and the next choice is dependent on this remembrance.

For those of us who are in the habit of conserving TTY paper, and wish to generate only one solution, assuming one does exist, line 992 should be replaced with a STOP statement. Many of these puzzles have hundreds of solutions!

Puzzles that have few solutions will cause the program to execute for comparatively long periods of time. In fact, the run time before a solution is found to be inversely proportional to the number of solutions. I include this as a warning to people who expect an output immediately after depressing the return key. I've run a problem in which each letter in the P$ array was different. The program ran for more than 2 minutes before the message END OF SOLUTIONS was printed! In general, whenever this message is printed without any solutions before it, then no solutions exist.

Some Thoughts

I've seen (and written) a number of backtracking programs applied to chess. One such program is known as the "knight's tour." In this case the program reads the knight's coordinates on a chess board and generates a combination of 63 legal moves so that the knight visits every square on the board exactly once.

In 1850 the great mathematician C. F. Gauss investigated what has been called the "Eight Queens Problem." It fundamentally consists of the placement of eight queens on a standard chess board, such that no queen checks against another queen. That is, no queen can be in the same column, row, or diagonal as another queen. Needless to say, even a great genius such as Gauss could not, and did not, generate all the solutions. However, since the advent of the digital computer, and by the use of the backtracking algorithm, it has been found that 92 such solutions exist. Try doing that by hand!

So far, we've seen that backtracking is great for playing games, suggesting that the method is short of practical application. Quite contrarily, this algorithm will find solutions to problems that characteristically defy analytic solution.

```
RUN

BKTRK          16:47    05/16/77   WEDNESDAY

?" ",X,Y,N,D
?" ",X,Y,R,E
?" ",X,Y,U,L

END OF SOLUTIONS

TIME 152 SECS.

RUN

BKTRK          18:26    05/16/77   MONDAY

?" ",S,O,U,N
?" ",L,I,K,E
?N,A,N,C,Y

 0     2     3     3     1
 0     7     8     6     4
 1     0     1     9     5

 0     3     8     6     1
 0     6     2     9     4
 1     0     1     7     5

 0     5     4     4     1
 0     6     7     3     9
 1     2     1     8     0

 0     6     4     4     1
 0     5     7     3     9
 1     2     1     8     0

 0     6     7     7     1
 0     8     3     4     9
 1     5     1     2     0

 0     8     7     7     1
 0     6     3     4     9
 1     5     1     2     0

END OF SOLUTIONS

TIME 7 SECS.

RUN
```

Sample runs.

Consider a large number of switches connected together in some haphazard series and parallel fashion. Say you have some input signals (telephone transmitters) on one side of the switching array and a finite number of outputs (telephone receivers) on the other side. The problem is to connect one of the inputs to an output device of your choice. The input signals become active randomly (whenever the telephones are dialed). A computer programmed to backtrack could find a path to make such a connection. If no connection is possible, because other signals are using the needed switches, a busy signal could be generated. In this case the acceptability clause is very simple to program, since we simply test whether the switches are open or closed.

As a final note, I'd like to point out that learning programs have been the domain of computer scientists. One reason for this is because such algorithms are usually implemented by languages that can be recursive (a process that BASIC must simulate). I hope I have prompted more hobbyists to utilize this most interesting problem-solver. ■

References

[1]Wirth, Niklaus, *Algorithms + Data Structures = Programs*, Englewood Cliffs NJ, Prentice-Hall, Inc., 1976.

[2]Ruch, F. L., and Zimbardo, P. G., *Psychology and Life*, 8th Edition, Glenview IL, Scott, Foresman and Co., 1971.

Daniel D. Mickle
Box #1, Sunset Dr.
Lodi OH 44254

Practical Computer Projects

-- for your house

Are you planning to have a computer run your house? Will your computer monitor inside and outside temperatures, tell you if it is raining, or check that the doors or windows are open at a particular time? Do you wish to have a fire and burglar alarm system or keep tabs on the water level in the basement? If you do, you will want your electronic marvel to do something useful with the information. Your computer must be able to turn on the sump pump and regulate the furnace, air conditioner, or attic fan. You may want to make certain alarms active for only part of the day or only on certain days of the week. You might want the coffee pot or electric frying pan turned on to have your breakfast ready when you get up, or you may want your stereo to be shut off at 2:00 a.m., in case you forget. The list of possible uses for your computer is limited only by your imagination.

How can you do all these wonderful things? The following is a set of basic hardware circuits which will allow you to get started. Every reader knows that his thoughts are generally worth cold, hard cash. For this reason, you won't find a dissertation on computer control of a 440 V 3-phase overhead crane. What I am giving to all *73* readers is a set of simple circuits which you can use directly to control your house appliances. All the designs in this article are entirely my work.

Most of the units or appliances in your house are 120 V ac and range from a few Watts to a couple thousand. One common exception is the furnace. The best place to turn your furnace on and off is the thermostat line. On most furnaces this is a 24 V ac line. Regardless of the voltages involved, the basic ideas are the same.

In Fig. 1, you can see a simple way in which the H74C1 optoisolator can be used to pass full current to the load. This means that your bulb will burn at full brilliance. I would like to mention that, if the device lives up to published specs, there would be no problem in driving a 25-Watt bulb at full brightness.

Obviously, 25 W is not enough for a coffee pot or a washing machine. In Fig. 2, I have designed a circuit that can handle a much higher load. By using the LASCR side of the optoisolator to trigger a larger SCR, of the 25-Amp range, you can switch loads up to 3000 Watts. Now we're talking! You should remember that, if the load is inductive, like a pump or a motor, it will most likely draw three times as much current in order to get started as it does after it gets up to normal speed. For this reason, allow yourself a working margin to keep parts from going up in smoke. If a 25-Amp SCR is used, limit the inductive-type loads to 1000 W, or about 8 Amps. Toasters, coffee pots, electric frying pans, and light bulbs

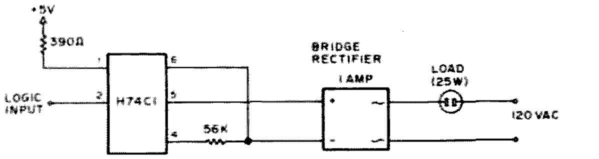

Fig. 1. A bridge rectifier allows full current through an optoisolator.

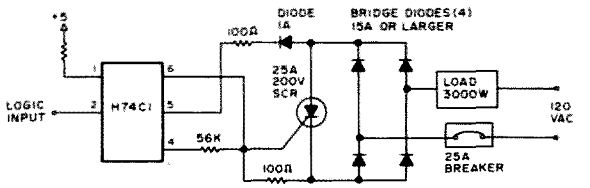

Fig. 2. Driving a heavy-duty SCR from a low-level I/O port.

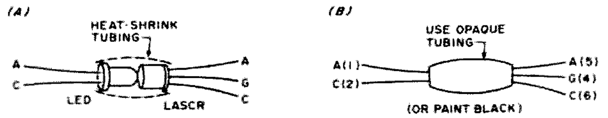

Fig. 3. No optoisolators? Roll your own.

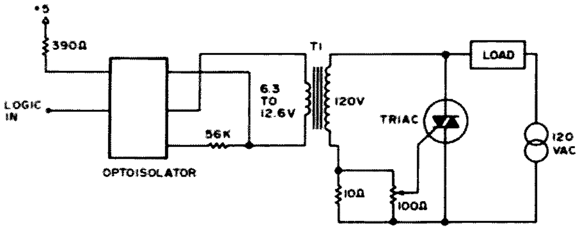

Fig. 4.

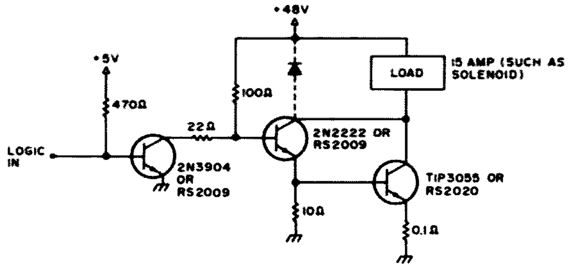

Fig. 5. Drive a 15-Amp load on a 48-volt line.

are noninductive and can go the full 3000 Watts.

If you can't find an H74C1 optoisolator, have no fear – it is quite easy to make one. Light-activated SCRs are available from Radio Shack and many other places. LEDs and heat-shrink tubing are very common also. By slipping an LED and an LASCR into a piece of heat-shrink tubing so that they touch, and then heating the tubing, you end up with a home brew optoisolator which will work just as well as the prepackaged type. Watch the maximum currents and voltages for which your LASCR was made. Stay within those limits, and you will get satisfactory performance. If you can't find the dark opaque tubing, a little flat black paint over the outside will keep your unit from being triggered by background lighting.

As you see in Fig. 4, I have given you another alternative to ac control. Using the saturation characteristic of a common filament transformer allows you to trigger a full-wave triac on or off. The transformer can be anything from a 6.3- to a 12.6-volt secondary. The potentiometer will allow enough adjustment so that parts values are not critical. Be certain that the primary of the transformer is towards the triac. To set this circuit for proper on-off action, ground the data input. A ground at this point will light the LED. With the ground in place, adjust the pot, so the load is turned on. Remove the ground, and the load should be switched off. This is the setting at which you will leave it. Now try it from your I/O port. Remember that the logic 0 turns the device on; logic 1 turns it off.

I know there could be special cases where you would like to power a heavy load from a dc line. An example of this would be driving a solenoid or an electromagnet from a 48 V dc supply. This can be used for stopping the paper tape in your new home brew high speed reader. I have provided for just that contingency with the circuit in Fig. 5. In this one, I allowed a 0 logic to again be the level to trigger the load on, but I am including the opposite type, also. A 0 level at the input turns the first transistor off. This allows the base of the next transistor to go high, and that transistor turns on. In turn, this switches the final transistor on, allowing the load to pull full current. The low-value resistor in the emitter lead prevents thermal runaway.

As I promised, for the person who wants a 1 level to activate his outboard equipment, it is as simple as adding an inverter to the other circuits. In Fig. 6 is a one-transistor inverter, which can be inserted between the I/O port and the logic-input lead of the other circuits I have mentioned. An IC inverter will work equally well at this point, providing it is one with a TTL fanout of 10 or more.

The siren driver in Fig. 7 is just the ticket to add to the fire and burglar alarm you are planning. I am showing the siren powered by 9 volts, as I believe this is common to many of the available modules. Notice, however, the similarity to Fig. 8. The same driver may be used with a variety of voltages at the output. The only limit is the maximum voltage of the second transistor.

The last diagram shows you how to drive a relay from your low-powered I/O port. With the contacts of the relay, it does not matter if the furnace, door-lock solenoid, or toaster you are switching is ac or dc, nor does it matter what the voltage is or what current is being drawn, as long as you do not exceed the ratings of the contacts. I indicated that you should use a 12 V dc relay, as most of the home computers already have a 12-volt supply. The diode across the relay coil is reversed to the current flow and is there to cut transients caused by the inductive load. If you have an inductive load in the circuit in Fig. 5, which I said can be used as a solenoid or relay driver, a reversed diode should be added to it, also. This removes the possible transients of voltage which can zoom to several hundred volts and cause transistor failure.

I can picture it all now. You can rise in the morning to the sound of your computer-driven electronic chimes. Addressing the new voice-entry input of your home marvel and friend, you tell it to hold the eggs – you are only having coffee and toast this morning. Flawlessly, the circuits to your coffee pot and your toaster are turned on, so the food will be ready when you are. Leaving the door, you tell the computer, which may even respond to a name, that you will be gone all day. It shuts down the coffee, toaster, and furnace. It arms all burglar alarms, and, if any windows are unlocked, it locks them by solenoid. The fire sensors are always on, but, instead of a local siren, they will now dial the fire department. As your car backs out of the driveway, the house is already cooling down to save on fuel bills. To amuse itself while you are gone, the home computer begins to print out checks and letters to friends, so you can sign them when you get home. ■

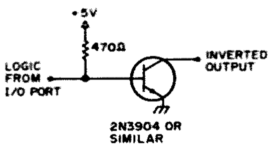

Fig. 6. Basic inverter.

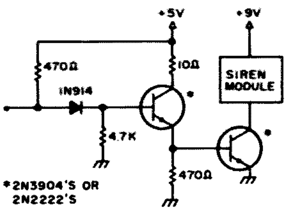

Fig. 7.

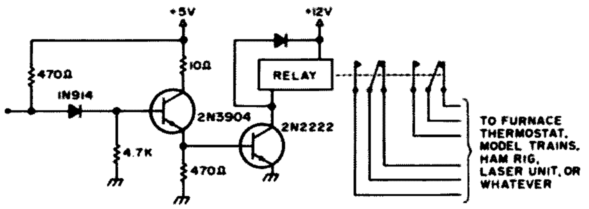

Fig. 8.

You'll Like SOL !

George Young WB6JYK
Sierra High School
Tollhouse CA 93667

The shipping carton measures 18 x 18 x 13 inches and checks in at about 40 pounds. It will fit in the car nicely for the trip home. I would suggest that the gals let the salesperson place the carton in the car for them. You can wrestle the thing into the house after you get it home.

If you have been waiting for Heathkit to get their act together before you take the plunge, you can stop waiting. This one puts the whole show together and packages it in a neat console, just a little larger than the typewriter that put the words on this manuscript.

Shipping Carton Packaging

One of the things that I look for in kits is how well the manufacturer packages his kit. All kinds of things can be inferred from this information. The ham or computer nut on the receiving end wants the kit components well protected. After all, he has already paid for them. How well the contents are protected also reflects how much the manufacturer thinks of his product. He should want to get it to the buyer without any damage whatsoever to the contents.

This kit is exceptionally well packaged. Inside, there is ample packing material, and each individual item is protected from its neighbors, so there is no chance of components rubbing and bumping together. Short of dropping the shipping carton from a height of 4 feet onto a concrete floor, you can't hurt things at all. Normal shipping handling should not affect this carton's contents.

Unpacking

When you slit the top tape holding the upper flaps closed, the first thing you see is the thick binder. This is exactly the way it should be. Leave the rest of the kit packed, and take the binder out of the carton, relax in the easy chair, and read it. (We kit builders always do this before we build a kit, don't we?)

The first thing you are going to see is a page that says "STOP! Do not pass Go without reading this page." We have a number of revisions to incorporate into the manual first. This is par for the course. Even Heath has to do this with their products for awhile, until all the kit builders feed back the necessary information to get all the errors out of the assembly manual before the second printing of the manual. (Sometimes, it's the second or third printing before you get an error-free manual to work from.) Don't panic. The revisions are quite minor and already reflect some of the feedback from the kit-building fraternity.

Manual Revisions

I want to revise the assembly manual even further, but this revision has to do with the nature of the kit builder rather than any errors that I uncovered. In Step 3 of the revision page, add an (aa) before the manual's Step 1. For the (aa) step put in: Go to section VI, page VI-9. What I want to do is to get you to the part of the manual concerning the finishing of the walnut side panels at the very start. These solid walnut side panels have to be finished with some type of protective coating, and this will take some time. It could take several days to put on the finish of your choice. If you don't have them all done, finish dry, and ready when you get to that particular assembly step, they will probably end up getting put on without any finish whatsoever, and you'll make the excuse that you'll take them off later and finish them. If this step is not taken at the onset of the construction process, then we kit builders know what will happen. (Of course, if you really read the assembly manual that carefully, you already knew this. The kit manufacturers don't know us kit builders very well, do they?)

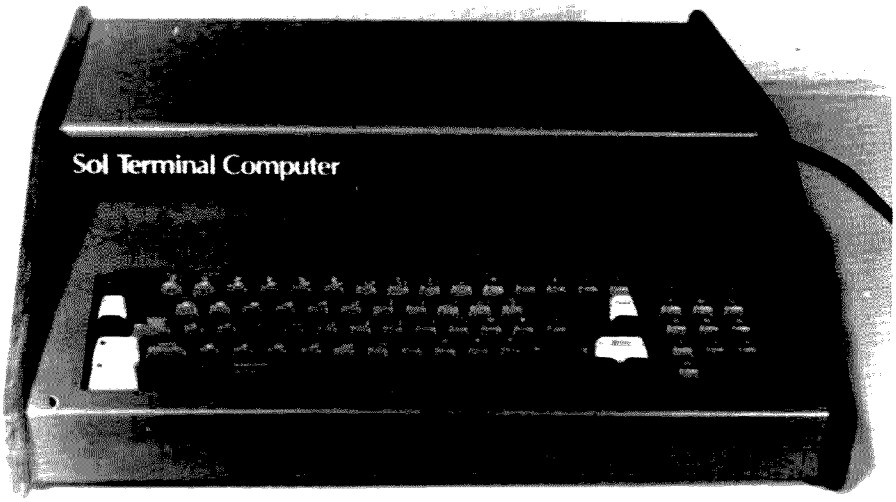

Completed SOL.

Assembly Tools and Test Equipment

A list of tools and necessary test equipment is given at the beginning of each section. Almost all of these tools will already be on hand for any serious kit builder. A good #2 Phillips screwdriver is an absolute must. A good volt ohmmeter is a must. An oscilloscope is desirable, but Processor Technology Corporation (hereinafter called PTC) shows you how to build an rf probe from some of the kit parts to bypass the scope, if you don't have one.

One of the things you are going to have to get for your computer system is a video monitor. In fact, you are going to have to have one for the assembly of this kit. This can be a commercial monitor or a modified TV set. If you modify a TV set, then modify one that has a transformer in it. Don't even try to use a so-called "transformerless" set. These are often called "hot-chassis sets" and rightly so. A transistorized black and white TV is around $100. Since you are going to have more than a kilobuck invested in your system, it is not economically sound to try and use a hot-chassis TV set with the possibility of destroying your $1000 investment. The details on how to convert a TV to make yourself a good monitor are in the back of your binder.

The assembly of the power supply and what PTC calls the Personality Module will not require the video monitor. As soon as you start the assembly of the main board, you will need it. PTC is going to have you assemble and test the built-in character generator chip and all its associated circuits at the beginning, to make sure they work before you proceed with the microprocessor section. This is sound procedure, and, after you see the entire character set displayed on the screen, you will be feeling quite good about your decision to build the SOL.

So, as soon as you place your order for your kit, get shopping for your monitor. Until the kit arrives, you can enjoy the little black and white transistorized TV in its more conventional application.

Problems

This usually turns out to be the longest portion of my kit building articles. This time I am going to have to stretch this section and get picky on the tiniest details, because I had no problems. I suppose a good deal of this lack of problems could be contributed to luck. However, Murphy usually doesn't treat me any differently than he treats you.

The first unit assembled is the power supply module. It went together smoothly and without problems. A test of the assembled power supply module showed all the right voltages in the right places, except one. I'll get to that incorrect voltage in a moment. PTC even includes a spare fuse in case you aren't as lucky as I was. This unit now has a spare fuse.

There is one feature in the power supply that I feel is needed and is state of the art. This is the inclusion in this power supply of overvoltage protection. Consider what will happen to all your precious chips, throughout the entire computer, if the series pass regulator transistor fails. The most common failure is a collector-to-emitter short. Such a failure places unregulated dc on all chips connected to the +5 volt line. TTL chips don't like to see anything over about 5.5 volts. They are most unhappy with 8 volts applied to them. There are a lot of TTL chips in this computer.

This power supply has overvoltage protection built in, and this feature is often called "crowbar overvoltage" protection. I feel that this feature is so important that I deliberately left this circuit "energized," or operational, to make certain the overvoltage circuitry was functional. By leaving out R2 on the power supply, you can leave the overvoltage circuit functioning, and you will not have +5 volts out of the power supply. Since R2 is involved in one of the modifications that PTC is going to have you make, it is relatively simple to leave out R2 and the modification, to insure that the circuit will offer the desired protection. This is why I had one incorrect voltage, as stated above. It was not because I had a problem; it was because I deliberately introduced a problem, so I could test something. It involves a little extra work on your part, but I feel that it is worth the extra work.

Assembly

I implied earlier that this was a kit that was comparable to a Heathkit. I still wish to imply that you do not need to wait for Heathkit to come out with their product. This one comes close to their line in simplicity of assembly. You should have assembled several Heathkits, including some of their more complicated ones. This is not an easy kit and certainly not one that you should try to cut your teeth on. Assembly time for me ran to 40 hours, and I had no problems. With any problems, you should plan on at least twice that much time. The factory charges $500 more for the assembled kits. So that is how much you are going to save (earn?) by assembling your own kit. That's what I would charge to put one together for you, and I would be earning every penny of it, too.

You need to be able to solder and solder very well. You need to be able to make a good solder connection

Kit contents, with some still wrapped in their packaging.

quickly, with no more heat than is necessary to do the job correctly. You need a good, temperature-controlled soldering iron with a small point. If you don't have one, then I suggest that you allow an extra $50.00 for your system and purchase one. That's only 5% of your investment, and I can't see how you can get around it.

This kit will challenge all the skills you have built up assembling all the other kits. It is extremely well designed mechanically. They have squeezed an awful lot into that package, and I am still amazed at how all the parts fit. Somebody there at PTC has a lot of skill in the mechanical engineering department.

Problems? I couldn't find one transistor. I couldn't find the tape that goes in the finger wells. (The tape is packaged in with the plexiglas in the lid.) I won't say that the transistor was not in the kit. I suspect that I lost it somewhere here on the workbench. With several thousand parts in the kit, a track record of just one missing item tends to make me think I was at fault and not PTC. I replaced the missing transistor from my own stock and did not even ask PTC for it. Thus, with no missing parts, my assembly was not held up at all. (The walnut end panels still don't have any finish on them.)

The Keyboard

I really like this keyboard. It has everything on it, and I especially like the way it is constructed. The keys have what appears to be aluminum foil bonded to a spring-type sponge pad. As you press down on a key, this foil shorts two contacts on the keyboard PC board under the key. This is my kind of circuit – simple, effective, and almost foolproof. If you don't buy the SOL, buy the keyboard (if PTC will sell you one separately). It's a winner. The feel is almost perfect. The keys are arranged beautifully and functionally.

The Video Display

If you assemble any computer, or even if you buy one already assembled, the first thing that you will find when you finish assembly is that you can't do anything. You have to have some way to get data into the machine and some way for the machine to get data back out to you. The keyboard takes care of the data input. I have already indicated that you'll have to have a video monitor in order to assemble the SOL. You would have made it the first purchase after assembling SOL anyway, so you already have the output device on hand. The video monitor circuitry is built into SOL, and you have verified its operation during assembly. All you need to do now, to be up and running, is to connect the video monitor to the machine. The assembly sequence and testing procedures also assure you that, after you get the kit all put together, it will do something immediately.

The video display is based on the 6574 character generator chip, and this gives you the full ASCII character set, both upper- and lowercase letters and all the other symbols. Provisions are made for your choice of letters as well. You can have black letters on a white background or white letters on a black background. And you can have combinations of the two options. You will not have the Greek alphabet with the character generator, but I doubt that this lack will dismay very many of us. The lowercase letters are offset. That is, the descenders, such as on the letter "p", extend below the line the way they are supposed to. The display is 64 characters wide, and, although this crowds the letters a little on my 5-inch monitor, each character is clean and quite readable. On a larger screen, the characters are better separated and more legible. I like this video monitor display.

Four major modules of the kit.

Input/Output and Expansion Capabilities

A serial data input/output port is built in. A parallel data input/output port is built in. All the circuitry to control these ports is built in. A cassette input/output port and its associated circuitry are built in.

There are only five slots in the card cage. Is this going to be a limiting factor? Every function that you want your machine to perform requires the filling up of a mother board slot. Most computers have as many as 20 or even 22 slots for you to plug cards into to get these functions. Only having five available slots may seem to be quite a limitation, at first. But, if you stop and think for a moment, PTC has built in almost all the circuitry that you need for almost all the functions you are going to want immediately. One of those slots is going to get either an 8K or 16K memory board. As soon as it is filled, you can load PTC BASIC via the built-in cassette recorder circuitry and begin programming in BASIC. Another slot can be filled with a floppy disk controller. A third slot can contain the interface circuitry for a hard-copy printer, if you can't interface either through the serial I/O or parallel I/O circuitry that you already have. You may just have to *hunt* (or wait until something else is invented) for something to fill those other empty slots in the card cage.

What Will It Do?

A better question might be: What won't it do? Attach

Jan 1978

the monitor and apply power. Inside, a small plug-in board that PTC calls their Personality Module, which contains 4 EROMs, provides the firmware to get operational. The board is a small one, but it's big on performance and takes the place of still another one of those boards that would normally go in a mother board slot. When you order your kit, get their best Personality Module, which PTC calls SOLOS™. It does everything.

Software Support

PTC has indicated that a full line of software support will be available as soon as all the bugs are out. That's nice – most of us would much rather wait a little longer for them to debug in exchange for the time it would take us to debug. In the meantime, since this is an 8080-based machine, all the 8080 software that has been written can be loaded from cassette and we can do anything with this computer system that we can get into programming. The speed of this machine is optimum. Running a machine at 4 MHz costs dollars. We have to use memory that is very fast and, therefore, costs more money. By running the system at a slower speed, we save money on almost every device that we want to add to the system. Most of the time that a computer system is operating is spent waiting for a cassette to load, the printer to print out, or the operator to program. For the home computerist, there is seldom a time that running at 4 MHz is cost effective. The trade-off of speed versus dollars is still very much on the side of dollars. My system uses a 750 kHz clock. It waits 90% of the time for me. I am the factor that limits the speed of my system.

Operation

As soon as you complete assembly, connect the monitor, and apply power, you can do something. Power on produces auto reset, the prompt character appears, and the system awaits your instructions. Typing *DU*mp followed by the entire address range from 0000 to FFFF will cause the entire contents of memory to flash by on the screen. The addresses change so fast that the last two hexadecimal digits are nothing but blurs, and the entire screen is nothing but data in hexadecimal form. In a couple of minutes, the entire 65K of addressable memory is dumped. If a high speed printer were hung on the parallel data port, the paper in the printer would literally fly out of the printer and across the room.

Many other commands are already programmed into the EROM firmware. You'll have to get yourself a SOL with SOLOS and see for yourself.

Summary

Been waiting for Heathkit to come out with their kit? They are too late. Processor Technology has stolen the ball game. If you have already built several kits, and at least one of the more complicated kits, and you can solder quickly and well, then wait no longer. Write: Processor Technology Corporation, 6200 Hollis Street, Emoryville CA 94608; or call them at (415) 652-8080, and get the scoop. Get yourself a video monitor or a small black and white transistorized TV set that has a transformer in it, get a schematic for the thing, modify it, assemble the SOL, and you will have an operational computer system. Add 8K of BASIC via the cassette input already provided, and you can start programming in BASIC immediately. Add a floppy and a floppy controller, and you can have the whole ball game on the road for about $2k with enough memory to play all the games and even do the books for the corporate business. ■

Russell Blahetka WD9DDV
3516 Western
Park Forest IL 60466

How To Keep Your Computer Happy

Congratulations! Through a lot of hard work, blood, sweat, and tears, not to mention a few expletives that weren't deleted, you have made a computer system. Even if it is just a couple K of memory and practically no I/O, you have a right to be proud of your accomplishment.

Let's face it, there have been a lot of articles written on special software, games, debug programs, and such, as well as a lot of ideas for incorporating some special hardware or improving existing system hardware in others. This article does neither. Hopefully, this article will help you to achieve long periods of time between failures, minimize flakes (intermittent problems), and, in general, keep things running smoothly. Some of the suggestions given may seem like small things, but small things do add up. Following the suggestions in this article may not entirely prevent down time, but it will better the odds. Take the word of a field engineer who has seen many data processing centers — the well-maintained center is easier to work in and requires the least amount of work.

Keep It Clean!

Two of the worst long-term enemies of computers (and other pieces of electronic gear) are dirt and heat. Static is also a danger, but usually that causes immediate problems. It will either destroy or confuse the logic, thus making the problem solid. Dirt and heat, on the other hand, can cause intermittent problems, excessive current drain, and, in general, cause a long-term degradation of your system.

Let's discuss dirt. I once had a problem with a high-speed paper tape reader interface that caused the reader to run backwards. The cause was an accumulation of dirt on one section of the board which changed the logic. In this case, a thorough scrubbing with alcohol was all that was needed to clean it up, but the fact remains that it could have been avoided.

Preventative maintenance does just that; it prevents the need for maintenance. If your computer cabinet has a filter, keep it clean. If it doesn't, put one on. When you put one on, put it on where the air is drawn in. There's no sense in filtering the air leaving the cabinet, since this just turns it into a vacuum cleaner. If your computer doesn't have a cabinet, look into making or buying one.

Other areas where dirt causes problems are board contacts and plugs. There have been many times when just reseating a board or cleaning its contacts helped bring a system back on its feet.

How often you clean things up depends on how much you value your equipment, how often you use it, and how large a system you have. If you use your system (or have it turned on) for 8 to 16 hours a day, you may want to take fifteen minutes each week to inspect things. Here are some dos and don'ts:

1. Vacuum your filters. A clogged filter does not allow good air circulation and will cause overheating. If you don't have filters, make sure

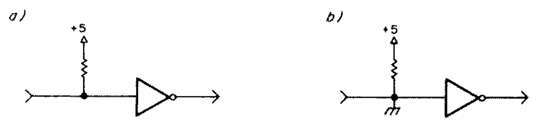

Fig. 1. (a) This is what a circuit may be meant to look like. (b) Because of dirt, the circuit may be changed to look like this.

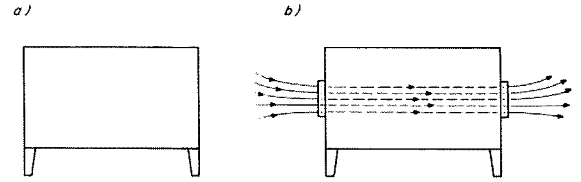

Fig. 2. (a) Without a fan, the heat stays in the cabinet. (b) With fans, air is forced through the cabinet.

you keep the boards free of dust.

2. If you want to clean the contacts on your printed circuit boards, you have two choices. If the problem is just dirt, use some isopropyl alcohol. If the contacts have oxidized, however, use a pink eraser. Let me point out that even gold contacts will oxidize. Never, never use sandpaper or steel wool, as they are too abrasive. If you have gold-plated contacts, and you use steel wool or sandpaper, you'll soon find them not to be gold plated. Continue on, and you'll soon find you don't have any contacts. Steel wool also sheds particles that can find their way into a lot of places and can cause more problems than dirt.

3. Either use a vacuum cleaner or blow very hard on plugs (the type used for circuit boards) to get all dust out of them. This is also a good method, if you are careful, to get stuff out of high-density wire-wrapped boards.

4. It is common practice in data processing centers to clean tape drive heads and transports every day (more than once a day in many cases). You may not need to do it quite as often, but, if you are experiencing some problems now, you may want to try cleaning the heads. As with board contacts, use isopropyl alcohol. This is available in most drug stores, and I recommend 95-99%. Do not use rubbing alcohol, however, as it contains mineral oil. The oil stays as the alcohol evaporates, and it's pretty obvious what can happen.

Keep It Cool!

Now that you have beaten the dirt to death, let's talk about heat. Heat can be both a friend and an enemy. For general purposes, you want to keep things as cool as possible. A chip may work great at 72° F, become intermittent at 75° F, and go completely dead at 78° F. So, if you want to force a failure quickly, use a blow dryer, or turn off the fans and close off the vents. This is a good troubleshooting technique and makes for a good burn-in test. With all this talk about cabinets, you may think they're too much of a bother. You may be thinking of just throwing the case away, and then you'll be sure it will be well ventilated. Do it, but you will soon see that cabinets are necessary and perform many useful purposes (besides being a place for your coffee cup to sit on). First of all, they make your area safer. There is less shock hazard if untrained hands go probing amongst the wires. Remember, it's not so much the voltage as it is the current that causes shock and death. Second, cabinets make fragile components less prone to damage from falling screwdrivers or such. Third, they keep out dirt and therefore prevent some of the problems talked about earlier. Last, but certainly not least, your equipment can stay cooler. A well-constructed cabinet with fans will ensure even cooling. The air is pushed in or pulled through and forced to cool the width of the cabinet. The number of fans needed varies with the application, but at least one should be used.

Summary

I hope this article has helped you see a few ways you can make your system more reliable. They are little things, but it is the little things that are important, and ignoring them can cause big headaches. If you want logical reasons for keeping your system up to snuff, consider this: You're about to show off your pride and joy to your buddy. When you turn it on, he is hit with a cloud of dirt and steel wool dust. He drops to the floor gasping for air and dies of suffocation. You wouldn't want that on your conscience, would you? ■

Clifton W. Pittelkau W4CQI
Rte. 1, Bethel Academy
Warrenton VA 22186

The Bionic Clock!

Many microcomputer applications require that the current time be available for display or printout, either on demand or when certain events occur. A time system of this type is known as a "real-time" clock, as distinguished from the microprocessor clock used for internal timing. One can think of at least a dozen applications for a real-time clock. For RTTY operation, the current time can be sent at the beginning or end of a transmission, included as part of a contest message when required, and used as a 10-minute timer for CW identification. Others may find the clock useful for such things as logging, satellite tracking, and timing in conjunction with repeater control, just to name a few.

A practical microcomputer real-time clock is not really a very difficult project. At the time I needed one, however, I could not find much information in the available literature. A system using timing loops was described by Hogenson in the December, 1975, issue of *Byte*, but this uses a dedicated program and cannot be run concurrently with other programs. I had considered interfacing a clock chip such as the MM5312 or 5313 to a 6820 PIA, but

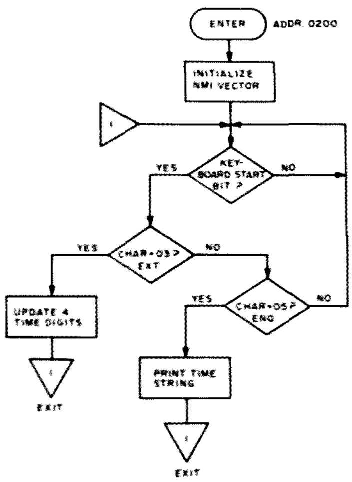

Fig. 1. Flowchart — wait loop, time update, and print time routines.

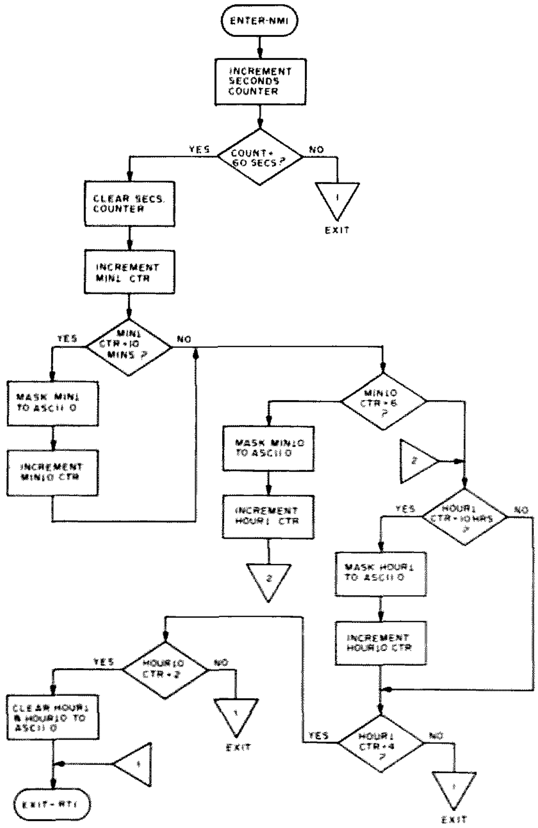

Fig. 2. Flowchart — NMI real-time clock routine.

```
0200 CE 02 3D   START   LDX   #$NMI   INITIALIZE NMI VECTOR
0203 FF A0 06           STX   NMIV
0206 7D 80 04   WAIT    TST   PIA ORA LOOK FOR KBD START BIT
0209 2B FB              BMI   WAIT
020B BD E1 AC           JSR   INEEE (MIKBUG) GET CHAR.
020E 81 03              CMPA  #3   ETX = TIME UPDATE CTRL CHAR.
0210 26 04              BNE   RDTIME
0210 8D 0E              BSR   STTIME
0214 20 F0              BRA   WAIT
0216 81 05      RDTIME  CMPA  #5   ENQ = READ TIME CTRL CHAR.
0218 26 EC              BNE   WAIT
021A CE 02 34           LDX   #$HOUR10  TIME STRING ADDR.
021B BD E0 7E           JSR   PDATA1  (MIKBUG)  PRINT TIME.
0220 20 E4              BRA   WAIT
                              UPDATE TIME FROM KEYBOARD
0222 CE 02 34   STTIME  LDX   #$HOUR10
0225 7F 02 8E           CLR   COUNT   RESET SECONDS COUNTER.
0228 BD E1 AC   TIMEIN  JSR   INEEE   GET DIGIT FROM KBD.
022B A7 00              STA   0, X
022D 08                 INX
022E 8C 02 38           CPX   #$MIN1+1
022F 26 F5              BNE   TIMEIN
0233 39                 RTS         RETURN TO WAIT LOOP
0234 30         HOUR10        0
0235 30         HOUR1         0
0236 30         MIN10         0
0237 30         MIN1          0
0238 20                       SPACE
0239 55                       U
023A 54                       T
023B 43                       C
023C 04                       EOT

                              NON-MASKABLE INTERRUPT ROUTINE
023D 7C 02 8E   NMI     INC   COUNT   COUNT 1 SEC.
0240 B6 02 8E           LDAA  COUNT
0243 81 3C              CMPA  #$3C    60 SECS?
0245 26 46              BNE   EXIT
0247 7F 02 8E           CLR   COUNT
024A 7C 02 37           INC   MIN1
024D B6 02 37           LDAA  MIN1    COUNT 1 MIN.
0250 81 3A              CMPA  #$3A    10 MINS?
0252 26 08              BNE   TENMIN
0254 84 30              ANDA  #$30    MASK TO ASCII ZERO.
0256 B7 02 37           STAA  MIN1
0259 7C 02 36           INC   MIN10
025C B6 02 36   TENMIN  LDAA  MIN10
025F 81 36              CMPA  #$36    60 MINS?
0261 26 08              BNE   ONEHR
0263 84 30              ANDA  #$30
0265 B7 02 36           STAA  MIN10
0268 7C 02 35           INC   HOUR1
026B B6 02 35   ONEHR   LDAA  HOUR1
026E 81 3A              CMPA  #$3A    10 HRS?
0270 26 08              BNE   TENHRS
0272 84 30              ANDA  #$30
0274 B7 02 35           STAA  HOUR1
0277 7C 02 34           INC   HOUR10
027A 81 34      TENHRS  CMPA  #$34    HOUR1 = 4?
027C 26 0F              BNE   EXIT
027E B6 02 34           LDAA  HOUR10
0281 81 32              CMPA  #$32    HOUR10 = 2?
0283 26 08              BNE   EXIT
0285 86 30              LDAA  #$30    IF HRS=24, CLEAR TO 00.
0287 B7 02 34           STAA  HOUR10
028A B7 02 35           STAA  HOUR1
028D 3B         EXIT    RTI
028E            COUNT
```

Fig. 3. 6800 real-time clock program.

neither was on hand at the time. One manufacturer is currently advertising a real-time clock board kit and software for about \$100. This is not quite my idea of a cheap clock!

The system I finally decided to use operates on an interrupt basis, using a crystal-controlled timebase and dividers to produce one pulse per second. This is connected to the microprocessor nonmaskable interrupt (NMI) line. The IRQ input can also be used, if not otherwise required by the other programs. Component cost is less than ten dollars, and the programs require only a nominal amount of memory. The programs to be described were developed for use with a 6800, using the Mikbug™ monitor and the KIM-1 6502 system. Adapting the programs to other systems should offer no great problems.

In addition to the clock routine, we must have a routine to store the address of the clock routine in the interrupt vector locations, a routine to initialize the clock "digit" locations from the terminal keyboard, and a routine to read out the time. A flowchart to do all this is shown in Fig. 1. For the purpose of demonstrating the program, a wait loop is used, so the program is waiting for a keyboard command to either store or read the time.

To start the clock, select the Store Time control character, type in only the four digits for the upcoming time in 24-hour format, and turn on the clock pulse generator at the exact minute. To read the current time, select the Print Time control character. The keyboard control characters can, of course, be changed to any others, as you desire.

A flowchart of the NMI routine is given in Fig. 2. Figs. 3 and 4 list the programs for the 6800 and 6502, respectively. When the time locations are initialized with the current time, the seconds counter location is cleared. After the clock generator is started, each pulse causes the program to vector to the interrupt routine, and the seconds counter is incremented by one. When 60 seconds are counted, the units/minutes digit is incremented, and the seconds counter is cleared again. The other digits are updated in essentially the same manner, following ordinary clock logic. Since the 24-hour format is used, the hours locations are cleared to zeros when the time increments to 2400 hours.

One note of caution: The clock generator must be off when you are in the system monitor. Until the program is loaded and executed, any interrupt will cause the monitor program to go berserk. After the program is loaded, you can safely return to the monitor if necessary.

If you don't use Universal

```
0200 D8          START   CLD
0201 A9 50               LDA   #$50     INITIALIZE NMI VECTOR
0203 8D FA 17            STA   NMIV (LO)
0206 A9 02               LDA   #$02
0208 8D FB 17            STA   NMIV (HI)
020B 2C 40 17    WAIT    BIT   SAD (KIM)  LOOK FOR KBD START BIT.
020E 30 FB               BMI   WAIT
0210 20 5A 1E            JSR   GETCH (KIM)  GET KBD CHAR.
0213 C9 03               CMP   #$03     ETX-TIME UPDATE CTRL CHAR.
0215 D0 06               BNE   RDTIME
0217 20 27 02            JSR   STTIME
021A 4C 0B 02            JMP   WAIT
021D C9 05       RDTIME  CMP   #$05     ENQ-READ TIME CTRL CHAR.
021F D0 EA               BNE   WAIT
0221 20 3A 02            JSR   PRTIME
0224 4C 0B 02            JMP   WAIT
0227 A9 00       STTIME  LDA   #0
0229 8D A5 02            STA   COUNT    RESET SECONDS COUNTER.
022C A2 00               LDX   #0
022E 20 5A 1E    TIMEIN  JSR   GETCH (KIM)
0231 9D 48 02            STA   HOUR10, X  STORE 4 DIGITS.
0234 E8                  INX
0235 E0 04               CPX   #$04     =SIZE+1
0237 D0 F5               BNE   TIMEIN
0239 60                  RTS
023A A2 00       PRTIME  LDX   #0
023C BD 48 02    PRSTR   LDA   HOUR10, X
023F 20 A0 1E            JSR   OUTCH (KIM)  PRINT CHAR.
0242 E8                  INX
0243 E0 08               CPX   #$08     =SIZE+1
0245 D0 F5               BNE   PRSTR
0247 60                  RTS

0248 30          HOUR10        0
0249 30          HOUR1         0
024A 30          MIN10         0
024B 30          MIN1          0
024C 20                        SPACE
024D 55                        U
024E 54                        T
024F 43                        C

                         NON-MASKABLE INTERRUPT ROUTINE

0250 48          NMI     PHA            SAVE A.
0251 EE A5 02            INC   COUNT
0254 AD A5 02            LDA   COUNT
0257 C9 3C               CMP   #$3C     60 SECS?
0259 D0 48               BNE   EXIT
025B A9 00               LDA   #0
025D 8D A5 02            STA   COUNT    RESET SECONDS COUNTER.
0260 EE 4B 02            INC   MIN1
0263 AD 4B 02            LDA   MIN1
0266 C9 3A               CMP   #$3A     10 MINS?
0268 D0 08               BNE   TENMIN
026A 29 30               AND   #$30     MASK TO ASCII ZERO.
026C 8D 4B 02            STA   MIN1
026F EE 4A 02            INC   MIN10
0272 AD 4A 02    TENMIN  LDA   MIN10
0275 C9 36               CMP   #$36     60 MINS?
0277 D0 08               BNE   ONEHR
0279 29 30               AND   #$30
027B 8D 4A 02            STA   MIN10
027E EE 49 02            INC   HOUR1
0281 AD 49 02    ONEHR   LDA   HOUR1
0284 C9 3A               CMP   #$3A     10 HRS?
0286 D0 08               BNE   TENHRS
0288 29 30               AND   #$30
028A 8D 49 02            STA   HOUR1
028D EE 48 02            INC   HOUR10
0290 C9 34       TENHRS  CMP   #$34     HOUR1 = 4?
0292 D0 0F               BNE   EXIT
0294 AD 48 02            LDA   HOUR10
0297 C9 32               CMP   #$32     HOUR10 = 2?
0299 D0 08               BNE   EXIT
029B A9 30               LDA   #$30     IF HRS=24, CLEAR TO 00.
029D 8D 49 02            STA   HOUR1
02A0 8D 48 02            STA   HOUR10
02A3 68          EXIT    PLA            RESTORE A.
02A4 40                  RTI
02A5             COUNT
```

Fig. 4. KIM-1 (6502) real-time clock program.

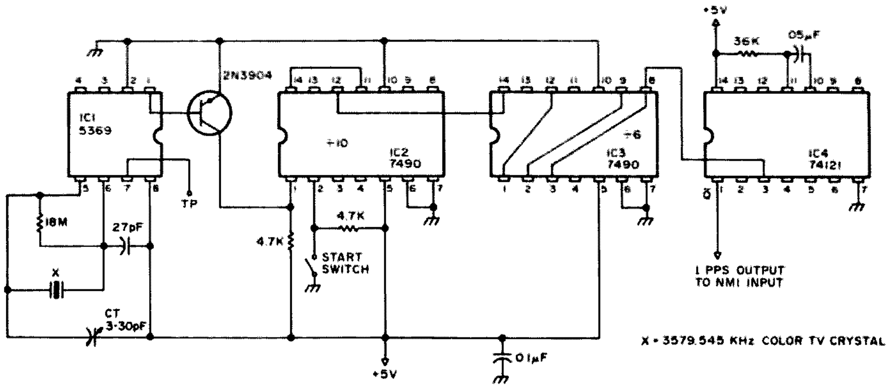

Fig. 5. Schematic diagram of the one PPS generator for the microprocessor real-time clock.

Coordinated Time (UTC), you can change the time zone to anything else, such as EST, PST, etc. With program modification, the time string can include other data.

A schematic of the clock generator is shown in Fig. 5. The timebase reference uses components from a $4.95 60 Hz crystal timebase kit. The 5369 is interfaced to the divider string TTL logic level with nearly any small switching-type NPN transistor. The two 7490s form the divide-by-60 function,

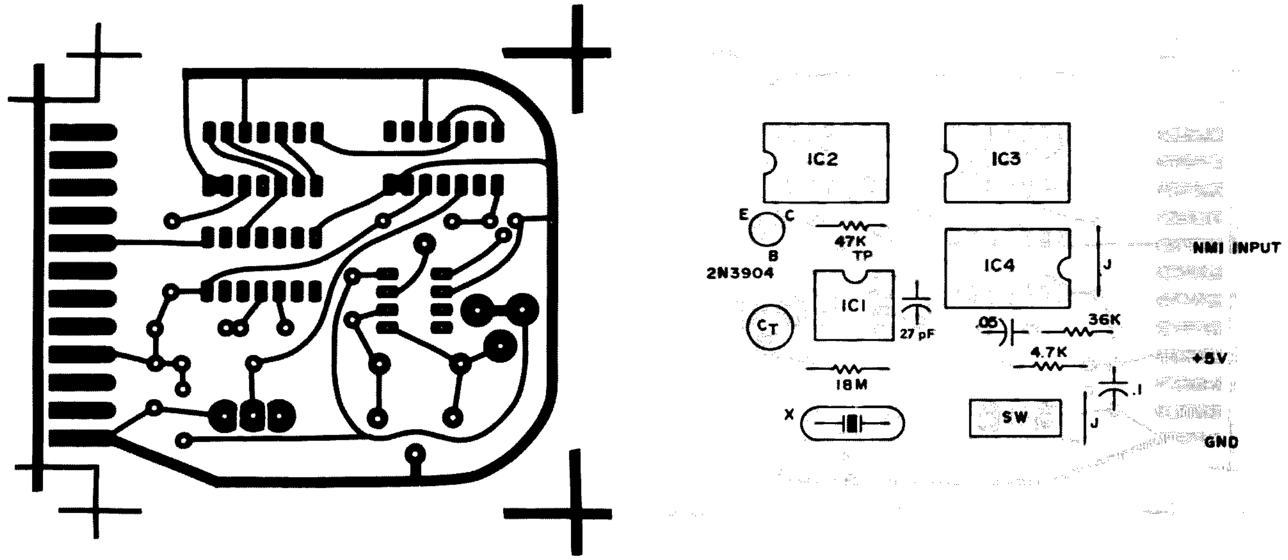

Fig. 6. PC board.

followed by a 74121 one-shot, to produce a pulse of approximately one ms. The pulse width is not critical, however, since the interrupt operates on the negative edge of the pulse. To reduce current drain, IC2 and IC3 can be replaced by 74LS90s. I could have used 74C90s, but I did not have a CMOS substitute for the 74121.

I discarded the small PC board that came with the timebase kit and made another board for the entire circuit. You can build the circuit on a piece of perfboard, mounting the timebase components on the PC board supplied. Artwork and component layout for the PC board I used are shown in Fig. 6.

The real-time clock has proved to be a real aid to RTTY operation. It's foolproof and reliable, and its accuracy is as good as any digital clock I have used. If your microcomputer needs a clock, try this one. ■

Paul J. Dujmich WA3TLD
1104 Prescott St.
McKeesport PA 15131

Improve the AX-190 Receiver

From 1970 to late 1971, the Allied Radio Shack Co. had a very nice little receiver on the market. The AX-190, as it was called, was a very respectable ham band receiver. It was priced fairly reasonably, too. Possibly you have one of these gems floating around the shack. Maybe you have the SX-190, the SWL cousin, designed for the shortwave broadcast bands. Both of these receivers are pretty much the same except for their hfo crystals. Performance-wise, the AX-190 series receiver is a cut above the average SWL or Novice receiver. It has a crystal high frequency oscillator, a very stable linear vfo, and two mechanical filters which give it excellent adjacent channel rejection. Add to this a visual dial accuracy of 1 kHz, along with a 100 kHz and 25 kHz crystal calibrator, and you have a receiver that comes very close to the better ham band receivers that are currently available.

The weak spot of the AX-190 series receiver is the rf amplifier. The receiver is an excellent performer on the low bands below 10 MHz. The weak spot begins to show up from 20 to 30 MHz. It is here that the lack of gain in the front end shows itself as a lack of background noise. This, then, is the point of my article. We're going to make that AX-190 (or SX-190) of yours into a very sensitive set of ears. So sensitive, in fact, that you'll hear the 15 kHz horizontal oscillator of every TV set in your neighborhood. Now maybe you don't care to hear every TV set near you, but think how nice OSCAR 6 and 7 will come in if the gooney boxes are peaking S-9!

The conversions to the receiver itself are basically simple. They amount to changing but a few parts here and there on the rf printed circuit board. The real improvement comes with the addition of a two stage outboard rf preamp. And best of all, the preamp can be installed right in the receiver itself. This is the best way to go since the external amplifier uses tuned circuits which already exist in the receiver. Grab your manual and follow along with me. Since we'll be making our changes on the rf circuit board only, use the large circuit diagram provided in the manual. If you don't have a diagram, don't despair. All of the mods can be had with only the information in this article.

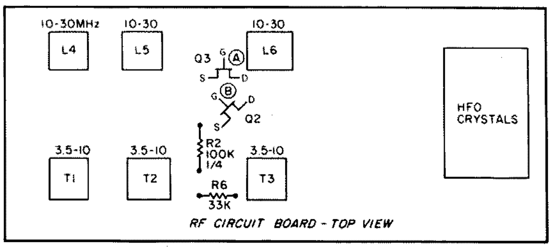

Fig. 1. View of rf circuit board from the top. The A and B marks next to Q2 and Q3 show the spots where the extra holes are to be drilled. Shown also are the locations of R2 and R6.

The AX-190 has a cascode rf amplifier consisting of Q2 and Q3, two JFETs (junction field effect transistors). We're going to replace them with MOSFETs (metal oxide semiconductor field effect transistors). These replacement transistors are not as expensive as their name implies. They can be purchased in single lots from ads in *73 Magazine* and will cost from \$.75 to \$1.00 each. The 40673 MOSFETs used are lead-for-lead compatible with the original transistors, except that they have an extra lead. This fourth or extra lead is the control or bias gate. Two tiny holes will have to be drilled in the circuit board to accept the extra lead of each transistor. There is a good reason for changing transistors. The original JFETs in the receiver have a listed transconductance rating of 2,000 microohms. The 40673[3] has a rating of 12,000, all else being equal. Without getting too technical, this difference of transconductance simply means that our 40673s have 6 times the possible gain of the original transistor. (Wouldn't you say that's a good reason to use them?) Our 40673 also has a much higher input impedance, which makes interstage coupling less of a problem. Now that you know why, let's discuss how.

With both top and bottom covers removed, stand the receiver on its side with the component side of the circuit boards to your left. The rf board will be the one near the bottom. It can be identified easily by the 12 hfo crystals tucked toward the front panel. Refer to Fig. 1 and locate Q2 and Q3 on the board. Carefully remove them by touching a small soldering iron to their foil pads. Once they are removed, clean up their mounting holes and foil pads with a solder sucker. Now using Fig. 1 as a guide, drill two holes with a printed circuit drill, one hole at Q2 and one at Q3.

After drilling, make sure that you haven't pierced any circuit board foil. The transistor leads that will go through these holes will be hand-wired on the bottom of the board. Now slip a 40673 into each position, making sure all four leads of both devices go through the board. The tab on Q3 should be pointing down and the tab on Q2 pointing to the lower right-hand corner. Solder the three leads of each device that have circuit foil on them. *Don't cut off* the fourth lead of each transistor. We want it as long as we can get it.

Fig. 2 shows the components that are to be added to each transistor. The post that is referred to on the diagram is a tie point for the

9 volt supply bus to the receiver rf amplifier. As you can see, a resistor goes from the post to each bias gate. From there, a 50k Ohm to ground is paralleled by a .001 bypass capacitor. Do not omit this capacitor, as it keeps rf off the bias voltage. When soldering, be especially neat, as solder splashes are hard to find and can cause endless troubles.

Now, referring to Fig. 1 again, locate R2, a 100k Ohm resistor, and replace it with a 1 megohm. This change puts the MOSFET gate at a higher potential above ground. Also locate R6, a 33k Ohm resistor, and replace it with the 100k Ohm you removed in the preceding step. This last change improves the sensitivity of the agc gate transistor. This in turn lets the rf amp run at almost full gain on noise or weak signals. The end result will be a compression effect similar to the compressors used on SSB transceivers. The credit for this last modification belongs to Bruce Mackey.[1] In his article which appeared in a past issue of *CQ Magazine*, Mr. Mackey describes modifications to the AX-190 agc circuit.

With the MOSFETs installed, a noticeable increase in sensitivity will be realized. This will be especially true on 28 MHz, where background noise becomes an index of rf gain. You may wish to stop here.

You have added about 9 dB of gain with the modifications to the rf stage. But if you're as much a purist as I am, you'll want to build up the circuit in Fig. 3. With this little two stage preamp, you'll add an extra 20-25 dB of gain ahead of whatever gain you already have. With this circuit, your rf gain control will do something instead of just sitting there at full clockwise. A look at Fig. 3 will disclose 2 more 40673s. These devices, like the ones in the receiver, are hooked up in cascode. This means that the first device uses its gate as the input, the normal situation, while the second device runs with its gate at rf ground. In this case, the source becomes the input with rf output taken at the drain. Because the second MOSFET is run the equivalent of common base (grounded grid), the amplifier does not require neutralization.

Construction of the preamp will be more or less up to you. I used a piece of glass perfboard about 1 in. x 2 in. If you build the preamp to these dimensions, it will be small enough to fit right in the AX-190 antenna compartment. Just solder a piece of strip copper to the preamp at a right angle to the plane of the board. The copper strip can then be soldered to the receiver tin shield. This method provides a dc ground, but more important, a good rf ground. The dotted line of Fig. 2 will give you an idea of where the preamp board should go.

As mentioned earlier, the preamp has no tuned circuits of its own. Its input and output are tuned by 2 ganged circuits which are actually a part of the receiver preselector. T1 of the preselector becomes the input of the preamp, and T2 the output. We can use this arrangement because T1 is the antenna trim in the receiver and is only a passive stage; it has no active devices. T2 is shared by the preamp output and the receiver rf amplifier input. All we have done is take an empty resonant circuit and give it some gain, about 25 dB worth.

To put the final touches on things, you'll want to peak up all the coils on the rf circuit board. Set the bandswitch to 3.5 MHz and get about a 3 S-unit reading from the calibrator. Peak up T1, T2, and T3 for maximum meter reading. Back off on the rf gain if the S-meter goes above S-7. Now switch to 28.5 MHz with the same procedure and peak up L4, L5, and L6. It might be necessary to repeat both procedures at least one time since the coil banks interact with each other. To make a quick test of the preamp, set the bandswitch to 28.5 MHz (or the highest band on the SX-190). With the rf gain control backed off one-third from maximum, there should still be a few S-units of noise on the meter. With gain turned up full, the meter will be near pinned from background noise. For best listening, set the rf gain until you get a noise level of about 2 or 3 S-units. Don't worry about signals that are too strong, because the alc will do its thing and maintain an audio output that will stay within 6 dB from noise to full quieting.

One final comment is necessary. You may find that at certain frequencies, the preamp will oscillate. Oscillation can be confirmed if you can tune the receiver by moving the preselector. If this is the case, simply detune either T1 or L4 very slightly. If you have trouble between 3.5 MHz and 10 MHz, detune T1. Between 10 MHz and 30 MHz, detune L4 slightly until the oscillation stops and the preselector peaks up normally. That's about it. You now have a much improved AX-190. The extra gain is really unnecessary most of the time. But, if you chase DX or OSCAR, it will really come in handy. I hope that these modifications will make your AX-190 into a really fine set of ears. ■

References

[1] "Improved Agc for the Allied Radio Shack 190 Receivers," Mackey, Bruce L., *CQ Magazine*, July, 1973, Vol. 29, No. 7, page 55.

[2] *Allied AX-190 Instruction Manual*, page 20, "Schematic Diagram of rf Amp." Copyright '71 by Allied Radio Shack.

[3] *RCA Top of the Line Replacement Guide*, Copyright 1968 by Radio Corporation of America.

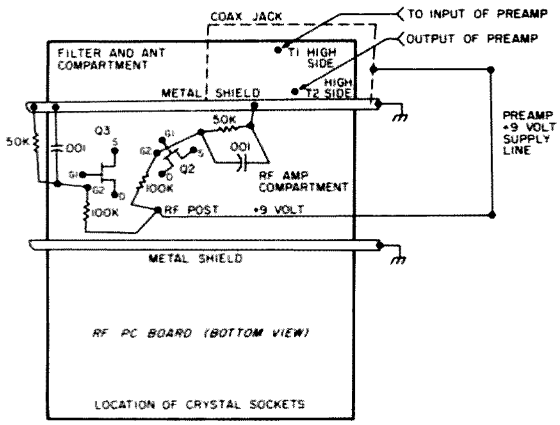

Fig. 2. Rf circuit board, bottom view. On both Q2 and Q3, the G2 connection is the second gate. G2 leads must not touch any circuit board foil. Also shown is the placement of the preamp board with its connections to the main board.

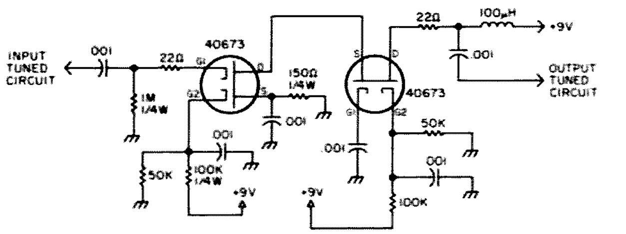

Fig. 3. Preamp circuit. Two RCA MOSFETs provide an extra 20 dB gain when used ahead of the AX-190. Note that input and output tuned circuits are actually a part of the receiver preselector on the rf circuit board. Connections to them are made with No. 18 stranded wire and kept as short as possible.

Howie DiBlasi, Director
Industrial Education and Technology
Lake Havasu High School
Lake Havasu AZ 86403

Hooking the Kids

The idea began in the teachers' lounge one day. Several teachers were discussing the problems that occur with the kids during the summer months and on weekends during the regular school year. We all agreed that there were not enough activities for young people in our small town of 14,000 people.

After the discussion, I decided that kids could have a lot of fun if introduced to the world of electronics and computers with a mini class during the summer or on a few weekends during the regular school year. There would be no grades or book work, just fun.

Students hooking up a circuit to experiment with switches and motors in the Electronic Recreation Program at Lake Havasu High School. (Left, Andy Nellis; center, Dan Mastroluca; right, Mark DiBlasi.)

Getting Started

I contacted the Lake Havasu Recreation Program about the idea. We agreed that 2 hours a day for 10 days would be about right for the summer program, and 4 hours on Saturday for 4 weekends would be sufficient during the regular school year. Advertisements were put in the newspaper and on the local radio station to let people know about the program. Three weeks later, we had two groups signed up and ready to go. Each group had 14 kids in it. Group one would meet from 1:00 to 3:00 in the afternoon, and the second group would meet from 7:00 to 9:00 in the evening. Group one ages were from 8-12 years old, and group two ages were from 13-18.

Before the classes started, I made up an outline for the material that would be covered during the sessions. I wanted it to be fun and interesting for the kids. I did not want it to be like school, with tests, grades, and specific requirements. The students did not have any background in electronics, so I had a wide area of material to select from. After several hours of planning, I decided on the following areas:

A. Electricity
   1. Voltage
   2. Current
   3. Resistance
   4. Static
B. Magnetism
   1. Permanent
   2. Electromagnets
C. Radio Communications
   1. Broadcasting
   2. Shortwave Radio
   3. Amateur Radio
D. Computers
   1. Operation
   2. Binary
   3. Hexadecimal
   4. BASIC
   5. Programming
   6. Games

Here We Go

The first day that we met, I introduced simple series and parallel circuits. Switches were then introduced, along with lights and resistors. All topics were handled as demonstrations in a lab area. As questions would come up, I would answer and demonstrate. This was very important to keep the fun in it. It does not help a program with kids 8-12 years old to have them sit at desks for 2 hours and lecture them about series and parallel circuits. Let them get their hands on the circuits. Let them discover what happens. I let the students experiment for the last hour of class with the circuits we had discussed.

The second day I demonstrated static electricity with a Tesla coil. It generates about 125,000 volts of static electricity and is great for demonstrations. I held a neon lamp about 6 inches from the coil, and it started to glow. Then the lights in the classroom were turned off. My hand and the lamp were both glowing a bright orange. The kids went wild. They loved it and wanted more. Next I used a fluorescent lamp, and it started to glow when I held it 6 inches from the coil. I then placed the lamp about 2 inches from the Tesla coil, and it created an arc between the lamp and the coil. The lamp will keep discharging as long as you hold the lamp close to the coil. It makes a bright blue arc when the lamp

discharges, and the kids loved it.

The next demonstration was on heat and static electricity. I held a piece of paper between the arcing lamp and the coil. It took about 2 seconds for the paper to catch fire with a small flame. I quickly blew it out, and then the questions started flying. We discussed current flow, size of wires, ionization of gas in a neon and fluorescent lamp, lightning and its effects. The two hours were gone before we knew it.

The third day we discussed magnets and how they work. Several demonstrations were used with iron filings to show magnetic fields, and coils were used to demonstrate electromagnets. The students were then given the remaining hour and a half to experiment with the Tesla coil and magnets.

While the students were working, I went into the radio room to set up a demonstration I would do the next day on amateur radio. While I was setting everything up, I was thinking how well everything was going.

"Fire, fire!" someone screamed.

"Get the fire extinguisher," another student yelled.

I ran out of the radio room to see what was going on. Standing next to the Tesla coil was a 9-year-old with a piece of paper going up in flames in his hands. He was staring at the paper, not quite believing that it was going up in flames. I told him to drop it on the floor. He started blowing on it to try to put it out. Needless to say, it was burning pretty well by now, and he just kept blowing on it trying to put it out. The flames were getting close to his fingers now, and he decided it would be best to drop it. Three kids stomped on what was left of the paper to put out the flames.

We spent the next 20 minutes discussing safety and the correct procedure for doing experiments. We had spent some time at the beginning talking about safety, and this was an excellent time to reemphasize it.

I then took a few minutes to find out why the piece of paper had caught on fire. The student was trying to do the same thing I had demonstrated with the Tesla coil and paper. The only problem was, the paper really got started burning before he could get it out. Lesson well learned. Experience is the best teacher.

Radios, Radios, Radios

The fourth and fifth days were spent on radio communication. I used an oscilloscope and a mike to demonstrate voice and frequency. Then a frequency generator was used to show the effect of different frequencies and what they looked like on the oscilloscope.

Our discussion covered radio waves, detectors, amplifiers, mixers, and commercial radio broadcasting. I was amazed at the questions the kids had. They were really interested in how things worked and wanted to know more about the equipment.

Amateur Radio

"CQ twenty, CQ twenty. This is WA7RTM, Lake Havasu, Arizona, calling and standing by." I gave a general call on 20 meters for the demonstration. I hoped someone would come back who was quite a distance away.

"WA7RTM, Lake Havasu, Arizona, this is WØVPR, Liberty, Missouri."

"Hey, that guy is calling you!" the kids yelled.

Their eyes were as wide as silver dollars. There was so much excitement in the room, the kids could not contain themselves. I let each of them say a few words with the mike, and they were hooked.

We spent the next hour talking about amateur licenses and what was necessary to get one. The advantages of ham radio over CB were pointed out, along with how much more fun the kids could have with a ham license, if they would study a little.

I then set up a 2 meter demonstration through the local repeater in Lake Havasu and then the repeater in Kingman, Arizona. With a repeater sitting on a mountaintop at 8,600 feet, you can make a few contacts. Contacts were made from Lake Havasu to Las Vegas, Los Angeles, Phoenix, and Prescott. The distances ranged from 5 miles to 300. The kids were really amazed at what you could do with amateur radio and how much better it was than CB.

We have a group of local amateurs who are teaching code and theory classes twice a year for anyone interested in becoming a ham. I made arrangements for the kids who were interested to get into the classes.

I had about 15 minutes left and demonstrated how to use the shortwave receivers so that they could listen to amateur radio broadcasts and shortwave broadcasts.

Computers

The second week started, and we began with a film about computers. I was able to get several excellent films from Modern Talking Picture Service. Their main office is located in New York, and they

Steve Marshal (left) and John Gustov (right) find out about static electricity using 100,000 volts to light a neon lamp.

Dan Mastroluca (left) and Tim Murphy (right) run their computer programs on the SOL and IMSAI during the computer segment of the program at Lake Havasu High School.

have several other offices located around the country. Most school districts make use of their film service because there is no charge for the films, except postage to return the film back to them. The main address in New York is: Modern Talking Picture Service, 2323 New Hyde Park Road, New Hyde Park, New York 11040.

Clubs and service organizations can get a copy of the films available by writing and asking for the folder on free films available. Subjects range from computers to electronics to farming and everything in between.

After the film, we introduced binary counting and how the computer uses it. The kids had a lot of fun with the binary alphabet I showed them how to use. We wrote the binary numbers from 1 to 26 and then put the letter A next to binary 1 and B next to binary 2, etc. Here are a few samples:

16	8	4	2	1		
0	0	0	0	1	=	A
0	0	0	1	0	=	B
0	0	0	1	1	=	C
0	0	1	0	0	=	D
0	0	1	0	1	=	E
0	0	1	1	0	=	F

After we had the code made up, the kids experimented with secret messages in binary. It was a good way to learn binary counting.

BASIC was introduced with chalkboard demonstrations and discussions. I only spent about 20 minutes with the introduction of BASIC statements. We talked about let, goto, if-then, print, and input statements.

I am an avid believer in games and simulations on the computer. I have used computer games to get interested students started on the computer, and it has worked very well. They are very quick to ask why it works that way, or what would happen if I did it this way. My answer is, "Try it and see what happens." The great thing about the games and simulations is that they allow the students to make decisions and take chances and make a mistake. They learn a lot from the mistakes they make.

I start with a simple program of a number-guessing game. There are many programs in computer game books, like "Guess," "Stars," "Trap," "Hi-Lo," and several other versions. Any one of them can be used for examples. I start by letting each student play the game a few times with the others watching. They then switch, and a new student plays the game on the computer. After each one has had a chance to play a few times, we go back to the chalkboard and go through the program step by step and discuss what is happening. Then the pieces of the puzzle start to fit into place. Statements start to make sense.

Computer Equipment

Our high school purchased a SOL-20 and IMSAI in the spring of 1977. My electronics students assembled the kits, and thus saved about $800.00 between the two kits. We also built four Seals 8K Random Access Memory Boards to be used in the SOL-20 and IMSAI. All of our equipment has been purchased from the Byte Shop in Phoenix, Arizona. I would suggest to anyone who is considering purchasing any microprocessor equipment that you find a good computer store and deal with them. When you have problems, you can go back for help. You may pay a few dollars more for a piece of equipment, but service is very important in a new field such as microprocessors. We have had several problems using the equipment, and Alan Hald and his staff at the Byte Shop in Phoenix have helped us each time. The problems were not with the equipment. The problems were with the people not knowing how to correctly use the equipment. When you have a place to call for help, it is very comforting to know someone will be there to help you.

Finishing Up

For the remaining three days, we spent time exploring different game programs and running them on the computers. I had the students write a few small programs of their own and then run them. They learned how to debug programs very quickly. They were amazed at how just one letter could cause a problem in a program.

I tried to keep the students taking turns with the computers, as it is very difficult to have 14 kids use 2 units and all get equal time.

Do It Again, Sam

Was the program successful? You bet. When the kids were finished, they did not want to stop. They would have gone for another two weeks. I was impressed with how much they had learned. They all found out that learning can be fun. It all depends on how the material is presented.

Did I have any problems? Yes.

How do you get 14 kids to go home every day? ■

cold fingers and the like, when done in mid-winter. A feedpoint for the gamma rod was selected at 8 feet off the ground to minimize shock hazards for the children. With this dimension fixed, numerous combinations of gamma rod length, diameter, spacing to tower, and gamma/omega capacitors were tried. The conclusion: An swr of 1:1 could always be obtained and no differences in on-the-air reports were noticed. Bandwidth between 2:1 swr points was 100 kHz for any given set of values. Since the antenna performed well and met all of my criteria, further experimentation was deferred and mechanical considerations took hold. The length of the gamma rod was left at 32 feet as measured from the top of the tower to the feedpoint. Spacing was one foot at the bottom. Since the tower tapers, the spacing varies with height since the rod was kept perpendicular to the ground.

The gamma rod was constructed of ½-inch aluminum tubing which was on hand, and the right angles were made via adapters available at a local hardware store. Joining the tubing was done as shown in Fig. 1.

The support insulators were made from ¾-inch PVC water pipe and T-fittings. PVC cleaner and cement were used to join the parts and stainless steel hose clamps were used for clamping the insulators to the gamma rod and tower. The number of insulators was 5 in order to offer structural integrity.

After the initial value of gamma capacitor was determined to be 80 pF at 4.0 MHz, an attempt was made to lower the resonant frequency to 3.5 MHz via the use of added gamma capacity or via an omega capacitor. Both worked with the same amount of change in resonance occurring for a given capacity, whether it was used as a gamma or omega capacitor.

The omega configuration was chosen since the frame of the variable omega capacitor could be at dc and rf ground, thus avoiding the need for an insulated coupling for the shaft. The value needed for the omega capacitor was found to be 50 pF, but 100 pF was used in case the added capacity was needed for 160 meters. The fixed gamma capacitor consisted of two Centralab type 857 NPO 15 kV capacitors in parallel, while the variable omega capacitor had ¼-inch plate spacing. All connections were made with No. 8 copper wire. One should consult the junk box, hamfests, and surplus dealers, whatever is convenient. It would be wise to use whatever is handy to experiment with at low power levels and then search for the big final ones after the values are known. No arcing was observed with the above units when maximum legal power was used, even on wet or humid days.

The tuning mechanism for the omega capacitor is an automatic TV rotor which was on sale for $30. This was a bit high, but it offered set-and-forget convenience with no experimenting needed. One can merely type the resonant frequencies onto gummed labels and affix them to the rotor control. The rotor should be oriented so that the end of rotation stop doesn't occur anywhere in the 180 degrees needed for the omega capacitor. The rotor I purchased has a solid output shaft. Coupling it to the capacitor shaft was done with flexible shaft coupling components available at a local electric motor supply house.

The tuner housing was made from an aluminum mailbox with the excess hardware removed. The bottom was fabricated from 1/8-inch aluminum stock to offer needed support for the rotor.

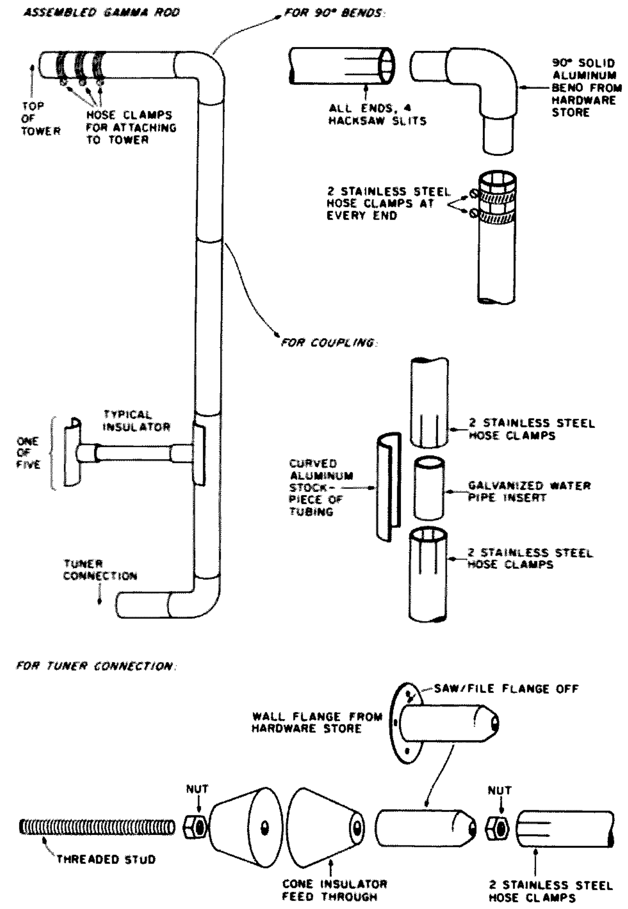

Fig. 2. Gamma rod assembly.

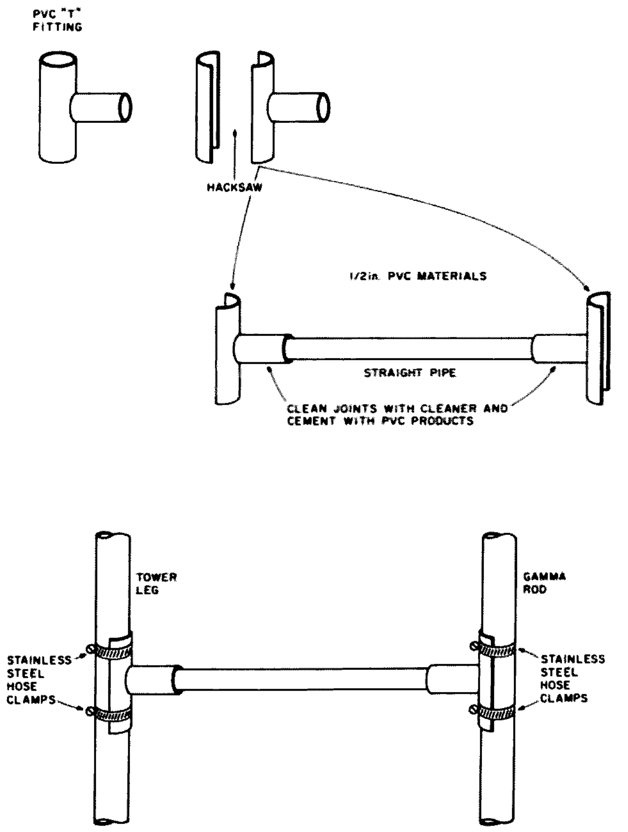

Fig. 3. Insulators for gamma rod.

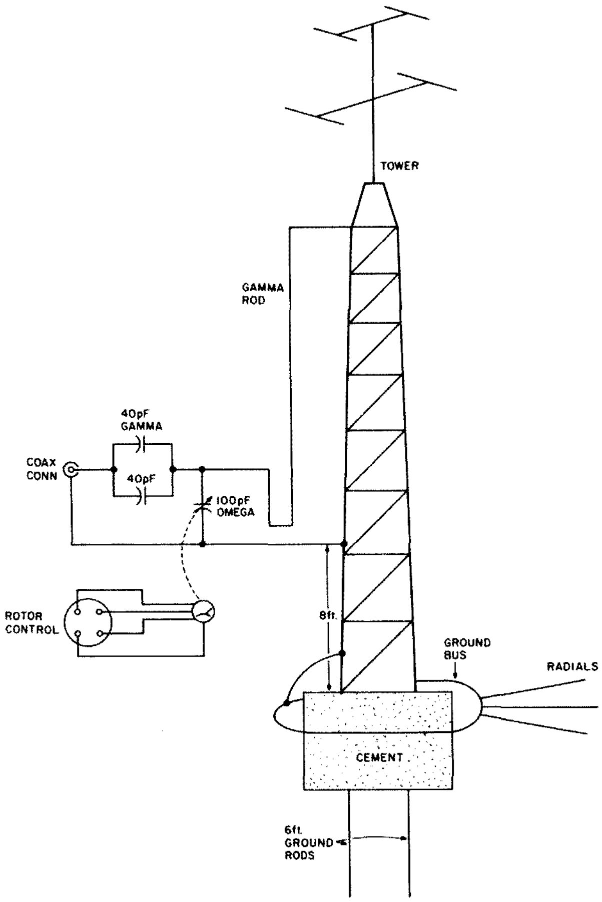

Fig. 4. Schematic of antenna system.

Angle aluminum and sheet metal screws can be used to hold the box, end, and bottom together. Connectors were installed in the bottom for the coax feed and rotor cable. All housing openings were sealed with silicone rubber after all adjustments were made. The ground system consists of the following components:

1. Two 6-foot ground rods underneath the concrete base for the tower.
2. 1000 feet of No. 14 insulated copper radials, random lengths, buried 2 to 4 feet underground.
3. 500 feet of No. 14 bare copper radials, random lengths, buried 2 to 4 feet underground.
4. A 70-foot well casing.
5. The house water system.
6. Electrical ground wires of the house, only via an indirect route through the rig's power cord.

A No. 8 bare copper wire forms a square ground bus around the base of the tower. The radials were soldered to the bus, which is connected to the tower via two pieces of ½-inch tinned copper braid held in place by stainless steel hose clamps. All ground connections were sprayed with clear plastic, taped, and resprayed. The radial system was installed as space permitted, which was only about 15 feet for those radials facing south. The longest radial is about 90 feet.

Results and Comments

The initial adjustment of the system was indeed time-consuming, especially since none of the combinations of gamma rod dimensions and capacity values approximated those of other authors. Considering the number of relevant factors for such an antenna system, each installation is likely to require some experimenting. A Palomar noise bridge was eventually purchased and was invaluable for making initial gross adjustments.

Rf in the shack was an occasional problem as manifested in the form of flashing neon bulbs in the rotor control box. This caused some damage and the cure took two steps. First, the excess rotor cable, coiled against the tower and in the shack, was removed. Second, a relay was added with normally open contacts to break the leads from the rotor cable as they entered the control box. Activating the relay thus permitted normal operation of the rotor. No more problems with the rf were observed.

The results using the system have been most rewarding! They were well worth the effort. I enjoy primarily rag chewing, but the Bicentennial WAS caught my interest. This antenna was used to work Alaska, Hawaii, and almost all the other states on 75 phone, not to mention the Bahamas. This was very exciting! The system works fine on local contacts, but really pans out for distances over 200 miles. What was once considered a "second best antenna" is now considered more than adequate. But, most importantly, the XYL likes it too, especially after listening to my vivid description of a 75 meter quad, phased verticals, or full-size dipole. For 160 meters, I plan to add gamma/omega capacitors via a relay or rotary switch ganged to the rotor. This latter idea would give 80 meter operation for 180 degrees of rotor movement and 160 meters for the other 180 degrees. I would like to thank the many hams who donated their time and cooperation with numerous on-the-air checks. ■

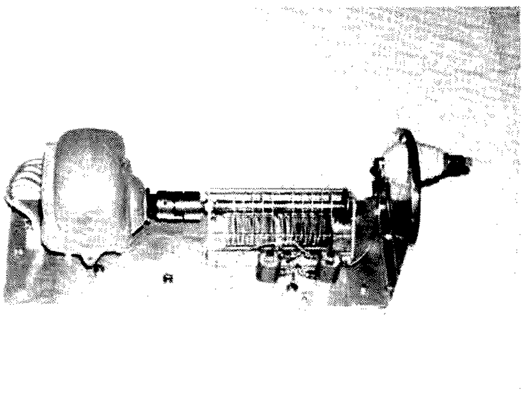

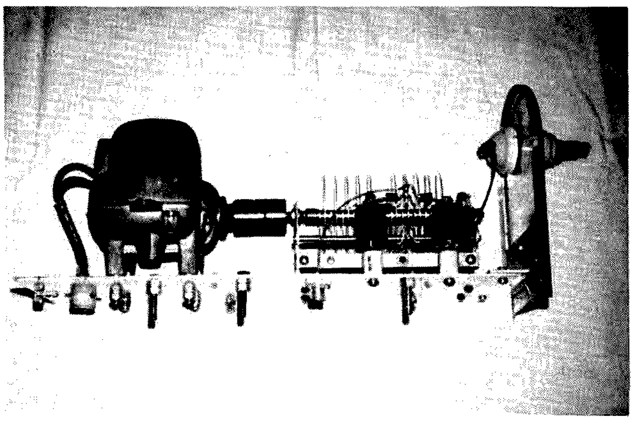

Fig. 5. Inside view of tuner.

73 Magazine Staff

Clean Up Your Act

-- with accurate SSB monitoring

One of the common things in most ham shacks in the old AM days was an off-the-air modulation monitor. Not much was required to construct such a diode receiver monitor, and it allowed one to obtain a final check on the sound of the transmitter's modulation. Such monitors cannot be so easily constructed for SSB monitoring because of the need to reinsert a carrier signal at the transmitter frequency to provide demodulation with a product detector. However, there are several points in the SSB transmitter modulation chain where one can monitor the signal to check for modulation quality using relatively simple circuitry. Ideas for such monitoring are described in this article, as well as circuits for off-the-air SSB modulation monitoring.

As shown in Fig. 1, there are two points within an SSB transmitter where the audio can be monitored and provide some useful information. The first point is after the microphone amplifier, just before the audio is fed into the balanced modulator. Any sort of simple audio isolation stage, such as that shown in Fig. 2(a), can be used to couple into the output of the microphone amplifier stage(s). Headphones can be used for monitoring, or a simple module-type audio amplifier can be used after the isolation stage for further amplification.

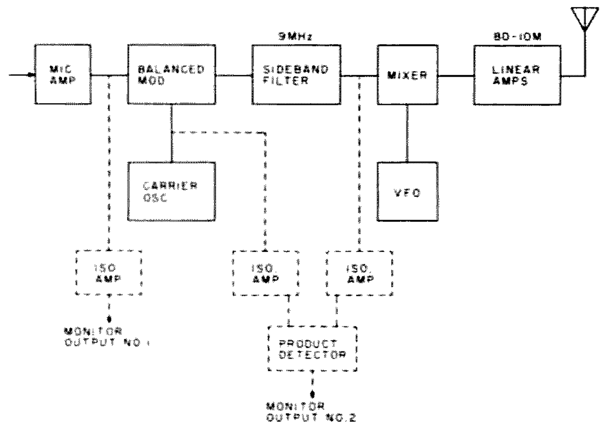

Fig. 1. Typical SSB transmitter block diagram showing two possibilities for audio monitoring.

Monitoring at this point is useful to check the settings on external audio processing equipment that may be used with a transmitter. It is not true modulation monitoring, of course, since the modulation process has not yet taken place. Much more useful information about modulation quality can be obtained, however, if one can access the second point shown in Fig. 1.

This is the point in the SSB generation chain after the sideband filter and just before the stage which translates the SSB generation frequency to a frequency within an amateur band. Monitoring at this point will give an indication of what the signal sounds like after audio processing and SSB generation has occurred. A bit more work is required, however, in that one must obtain a sample of the SSB signal and a sample of the carrier oscillator signal used for SSB generation and then go through a product detector for demodulation.

The circuit is not complicated, and a typical arrangement is shown in Fig. 2(b). An FET isolation stage is used to couple into the SSB signal chain and to the SSB carrier oscillator. The outputs of the stages go into a dual-diode product detector, and the resultant audio signal can be further amplified by any conventional means. The inputs to the isolation amplifier should be kept short and made with shielded wire. If the layout of components in a transmitter is too spread out to allow this, one could use separately installed FET source follower stages to sample the SSB signal and oscillator signal at the appropriate points in the transmitter. Then run shielded wire to the product detector/audio amplifier, which may be located internally or externally to the transmitter. The point to watch is that the monitoring circuitry does not allow the carrier oscillator signal to be coupled around the sideband filter and degrade the carrier suppression of the transmitted signal.

The ultimate way to monitor an SSB signal is, of course, off the air. There are several ways one can go about this, depending upon how much one feels it is worth and whether one just wants a spot monitoring capability or a continuous monitoring capability.

One obvious way to accomplish it, for those who use transceivers, is to buy a separate receiver. At first this may appear a fatuous statement, but there are available moderately priced portable radios which cover the shortwave bands. Adding a dual-diode product detector and a small bfo to them is relatively

simple. A bigger problem, however, is their unshielded construction. In the presence of a transmitter, or if rf from the antenna is getting into the shack, they can be easily overloaded and provide a completely false indication of modulation quality. Some individual experimentation is necessary to get such a monitoring receiver to work. But, with shielding and/or experimenting with location, they can work nicely.

A single-frequency, off-the-air monitor can be constructed by combining a crystal oscillator with a product detector. Such a monitor is only good for audio checks at one point within a band. But, if the tuning and loading of a transmitter remain the same over the rest of the band one uses, there should be no reason for the audio quality to change. One such circuit, called the "Sideband Sniffer" by G3OGR, was described in the December, 1972, issue of *73*. Fig. 3 is a slightly modified version of the circuit. Fundamental mode crystals are used, and it can be used on any band for which a proper crystal can be obtained. The LC circuit in the 2N706 collector circuit needs to be resonated in the band being used. The oscillator signal from the oscillator is spotted using a transceiver in the receive mode, and then the transceiver can be monitored on transmit. The 200 pF BC-type variable allows a slight "rubbering" of the crystal to facilitate monitoring. The unit should be constructed in a shielded enclosure and just enough antenna used to get a clean audio output.

Although it was not tried, it should be possible to develop a multiband monitor along the "Sniffer" line without having to bandswitch a tuned circuit. An untuned Pierce crystal oscillator, followed by several stages of untuned amplification, should be sufficient to develop enough injection voltage for the product detector.

Going back again to Fig. 1, there are some transmitters, such as the 9 MHz SSB generation-type, which allow another method of simple, continuous off-the-air modulation monitoring. A few oscillator voltages have to be "borrowed" from the transmitter, and an external mixer circuit is necessary. Rf pickup is made of the transmitted signal, and this signal is combined with the vfo signal taken from the transmitter to produce a 9 MHz i-f signal. The 9 MHz i-f signal and a signal from the transmitter's carrier oscillator are fed into a product detector in the manner shown in Fig. 2(b).

It may seem that some of the foregoing has emphasized too strongly the limitations or difficulties of getting a monitoring scheme to work. This was meant as a help, rather than a discouragement. It is probably difficult for newcomers to realize the benefits of being able to monitor your own modulation. However, once you do have a suitable scheme working, you will quickly add it to your list of things that your station cannot do without. ■

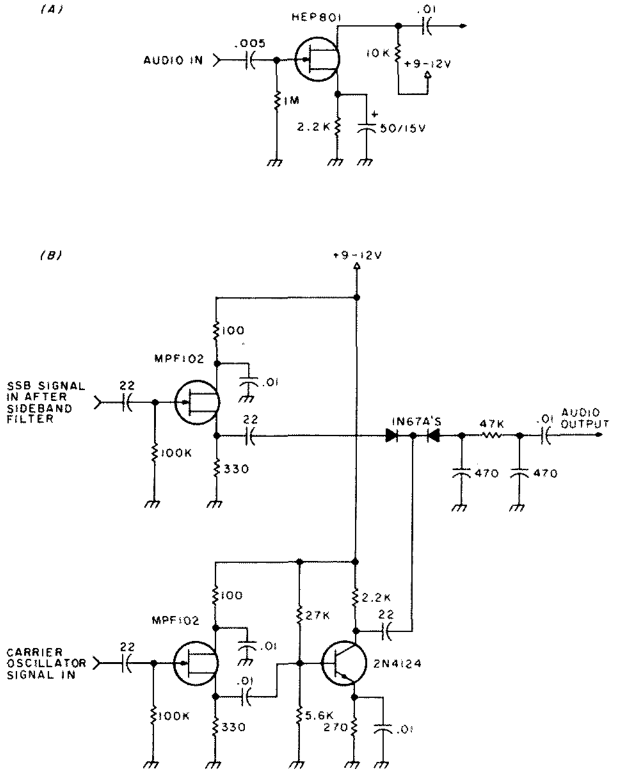

Fig. 2. Simple audio monitoring isolation stage (a). Part (b) shows isolation stages and product detector for monitoring after sideband filter transmitter.

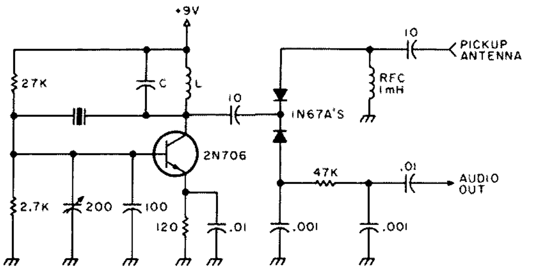

Fig. 3. Slightly modified version of G3OGR's "Sideband Sniffer."

Looking West

from page 20

Linking Service/Westlink Radio Network, and is a direct outgrowth of the understanding by a group of area amateurs that hams wanted to know what was going on and the best place to get this information to them was by radio. Out of this need and understanding has come the Westlink Newstape Service, free to all *repeaters* that furnish C-60 tape cassettes in SASE mailers.

It all happened at once. The report and order on repeater/remote deregulation, the unfortunate sudden illness of ARRL Southwestern Division Director John Griggs, the Personal Communications Foundation seminar, and a myriad of other things that the magazines with their two-month lead time are now just getting into. *HR Report* has done an admirable job in trying to keep up with all this, but two facts stand out. Space devoted to any given item in *HR Report* is limited by virtue of the publication's format, and not every amateur gets *HR Report*. How do you bring the feelings of the non-repeater operator to the attention of all amateurs? In the case of deregulation of repeaters, it would be almost a moot point by the time you read it here or in *QST*. But Westlink went to the average "Joe Ham" non-repeater person through its correspondent in Houston, Texas, and brought the feelings and ideas of the SSB operator on two meters to the forefront. When Charles Higginbotham of the FCC, Harry Dannals of the ARRL, and Lou McCoy of the ARRL's VRAC were at the recent Santa Maria ARRL Southwestern Division Convention, so were two Westlink reporters (armed with cassette tape recorders) to garner their views on the prime topic of the day.

The newstapes follow this format. First a QST callup, followed by a lead story, and so on. About every four minutes, there is a pause preceded by the cue line, "This is Westlink." During this five-second pause, a system has the opportunity to identify in order to meet FCC requirements (as of November 4, under new FCC regulations, the IDs have been spaced farther apart). Topics are covered one at a time, and wherever possible, either those making the news or experts on the topic under discussion are interviewed. No editorialization takes place, as this is better left for the printed page. And, as I said, to those repeaters supplying cassettes and prepaid addressed mailers, the service is free.

Continued on page 141

Thomas R. Sundstrom W2XQ
Box 205
Willingboro NJ 08046

Where, Oh Where

-- has that repeater gone ?

Where, oh where, has that repeater gone? It's probably faded into the setting sun over that last hill you climbed a while back. Now what? Is there another repeater you can use?

You already know of the excellent repeater atlas published by *73*. Can we improve on that? Yes, to a limited extent.

Other Sources

For better or worse, the ARRL publishes an annual repeater directory. The volume is not very useful because it does not adequately site the repeaters it does list, but recent editions do contain a few repeaters that have escaped the eagle-eyed staff at *73*.

Other sources of information could be your area frequency coordinator or a local ham radio outlet. Around here, the coordinator provides a by-frequency listing of repeaters, active and proposed, which is distributed via mail with the renewal notices for the largest area repeater association.

A local ham radio outlet will also be familiar with local repeaters because those will be the crystals stocked. Word-of-mouth tends to keep that counter list up-to-date.

As the *73 Repeater Atlas* continues to grow, the usefulness of these other sources will diminish. Depending upon the amount of time you have, it is worthwhile to run a quick check just in case.

Mapping Repeaters

The *73 Repeater Atlas* is the only volume that attempts to locate two meter repeaters on a state map. The volume of listings is immense and, no matter what precautions are taken, some errors are bound to creep in.

Rather than beat up the atlas in local use, mark up a road map. Most of us travel by car in a regional area, and a road map or two is always handy.

I found some relatively uncluttered road maps offered by the American Automobile Association, but no doubt some oil companies offer easy-to-read maps as well.

Both state and regional maps are useful in this exercise. With a fine-tipped felt pen – picking a visible color that is *not* used in the printing of the map – put the output frequencies on the map. Drop the prefix "146" or "147."

Those output frequencies with the suffix starting with a 6, 7, 8, or 9 have inputs in the 146 MHz range, and those commencing with a 0, 1, 2, or 3 have inputs in the 147 MHz range. The one exception is codification of either "40/00" or "60/00" for a repeater with an output on 147.00 MHz.

In the New York City area, all the 1 MHz splits except one have outputs in the 146 MHz range. With outputs ranging from .415 to .50, I coded the one exception with an "L" – for "low in" – tagged to the output.

In locating each repeater on the state or regional map, you will find a few problems. Sometimes the repeater location given in one of the listings doesn't correlate with a town or city, as the former may be known by a local "popularized" name. In such cases, use a conventional atlas and the *Radio Amateur Callbook* and site the repeater by the town or city given in the *Callbook*. In most cases, you'll be pretty close.

Advantages

This activity sounds more complicated than it really is. I marked up maps for the New York City/Long Island area, Pennsylvania, New Jersey, Delaware, Maryland, and the area around Washington DC in two hours or so.

From the base station, this homework was useful to actually learn where some of these far-distant repeaters are located, so that, with a beam antenna and when needed, my operational range could be extended. It is useful to learn about relatively unknown, quiet, open repeaters. Too often, many repeaters stand unused while a few of the larger "mouths" carry so much traffic that no decent conversation can be conducted. It's nice to be able to go off to one of the smaller repeaters – assuming you are out of simplex range – where your business can be conducted without "break . . . break."

By the way, it's not a bad idea when coming on a new repeater to ask for the control operator and check out your operating guidelines and the length of the timer. Some machines are "closed," unfortunately, so ask.

In the car, a knowledge of the smaller repeaters can be a boon. The larger repeaters cover a wide area and the odds of carrying on a conversation or getting directions diminish inversely with the radius of the grade A signal.

I have consistently found better directions and a willingness to help in solving a problem, or just to carry on a conversation, off on one of the local area repeaters.

In coding the map, I included all repeaters . . . even the closed ones. If I need directions in a particular spot and the closest repeater is denied to me because I lack the tone burst or PL tone, I just go reverse; the simplex range is good for 5 or 10 miles even in the worst terrain.

Conclusion

The road maps are useful in traveling and you'll have the entire repeater picture at a glance while picking your way around a locale on a weekend trip, or if you are a traveling salesman covering a territory.

If driving across country, this exercise may be of less value to you, but keep it in mind for any area that you intend to spend a few days in. Some of the motorist clubs offer strip road maps taking you from point A to point B, and these could be premarked with repeater outputs to save time.

There's one last benefit from this. You'll find some duplicates in the various repeater directories listing the same repeater under different towns, and you'll find some obvious typos on frequencies. Make a list of the problems and note the corrections, if known. If the problem is with the *73 Repeater Atlas*, send up the corrections for the next edition.

The *73 Repeater Atlas* is the most comprehensive listing around, and the staff should be commended for its attention to detail. The marked-up road maps just solve two problems — directions and repeater locations — quickly and easily. ■

Paul J. Dujmich WA3TLD
1104 Prescott St.
McKeesport PA 15131

Power Supply Regulation

-- using common sense

Have you ever wondered why there are so many articles written on power supplies? Did you ever start building a new supply project only to discover that you don't happen to have a fifty Watt zener or a 19.5 volt center-tapped transformer? If these problems sound familiar to you, you must have read some of the same articles I have. The building of power supplies seems to have a deep cloak of mystery around it matched only by UFOs, ESP, and the contents of that hamburger you had for lunch! C'mon guys, they're really not that hard to understand. Don't QRT on me now. You don't have to be an engineer to understand how those little black boxes work. Read on and you'll see that common sense is all you really need to build a good regulated power supply.

Fig. 1 is a circuit that you've seen over and over again. It is the basis of numerous regulator designs in hobby publications. The circuit consists of a power transistor, a zener diode, and one current limiting resistor for the zener. The output of a filtered rectifier is applied to the collector of Ql as well as the base via the limiting resistor Rl. The zener diode clips the voltage at the base at a value called the zener voltage. This zener voltage appears at the base of Ql. The output voltage at the emitter will be very close to the zener voltage, only differing about .7 volt. You can see that as we draw a heavy current from the emitter, the base voltage is held constant by the zener diode. Since the base voltage isn't changing, the output voltage doesn't either. This is the basis of operation of a transistor voltage regulator. Simple! Isn't it?

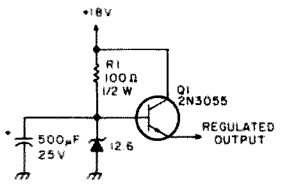

Fig. 1. Most often used regulator is the zener referenced pass transistor. This system lacks regulation at moderate currents.

The circuit of Fig. 1 works quite well if you play by its rules. Since we're only using one transistor to regulate the voltage, the quality of our regulation is pretty much dependent upon the gain of the transistor. Audio power transistors are most often used in this application. These devices have a dc gain of 40 to 50.

At this point, you may be wondering why gain is so important. Well, the more gain a transistor has, the less base current required for a given load current. In other words, a transistor with very little gain will not supply much load current before its base starts drawing quite a bit of current. This is bad news. When we reach the point of drawing considerable base current, the base voltage drops across the current limiting resistor. If we continue the process, we reach a point where the voltage drops below the zener operating voltage. Naturally, when this happens we no longer have a regulator. To lessen this effect, a current limiting resistor is chosen to do two jobs. It must be high enough in resistance to protect the zener diode from overheating and, at the same time, it must be low enough so that the base voltage won't drop too low. As shown in Fig. 1, a value around 100 Ohms is generally used as a compromise. If you have followed me so far, you can see that a regulator such as Fig. 1 has some pretty serious disadvantages. Regulation gets pretty bad if we try to draw a moderate current. For example, let's use a 2N3055 for Ql. We'll use a 12.5 volt zener. With a very light load, regulation will be fairly good and our output voltage will stay around 12 volts. But if we draw 2 or 3 Amps through this regulator, the base voltage drops due to base current, causing a high voltage drop across Rl. Bye-bye regulation. Since most of us need a regulator capable of delivering several Amps for TTL or two meter transceivers, something else is clearly in order. Enter the Darlington.

In the previous discussion we learned that the more gain a transistor has, the more output current it can supply without losing its regulation. Since one transistor can't supply enough gain, we can use two. A Darlington pair is just that – two transistors. A Darlington pair has very high dc gain – in the neighborhood of several thousand. As you remember, an audio transistor only has a gain of 50 or so. Fig. 2 shows a typical

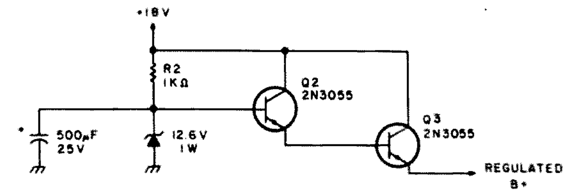

Fig. 2. The Darlington pair. With gain in the thousands, this circuit makes a very good high current regulator.

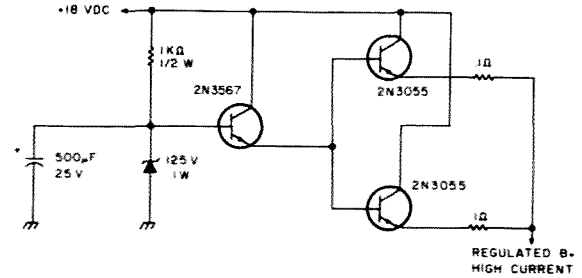

Fig. 3. A Darlington parallel arrangement. Currents approaching 10 Amps are possible with suitable pass transistors.

Darlington pair used as a voltage regulator. Q2 serves as the driver while Q3 handles the heavy current of the load. The collector current of Q2 is also the base current of Q3, since they are connected.

Since we have so much gain, we can use a fairly high resistance for R2 without affecting regulation. Since R2 is a fairly high value, our zener stays cool and does a better job of regulating. Using this Darlington arrangement allows us to draw several Amps of current while keeping the input base current of Q2 at a very small value. This in turn enables us to keep a cool zener. We get an added bonus from a Darlington. Putting a small value capacitor from the base of Q2 to ground adds additional filtering. This capacitance is multiplied by the gain of both transistors. If our capacitor is 500 uF and our total gain is 2000, the total effective filtering will be 500 times 2000, or a million uF. Yes, a million! That's a lot of filtering, and the dc will show it. As you can see, using a Darlington in place of a single pass transistor will give you as much as 5 Amps of power supply current while maintaining the output voltage at a few tenths of a volt. This is sufficient for most two meter rigs as well as most TTL projects. I'd like to make it clear that only the second transistor of the pair must be heat sunk. At a load current of several Amps, the driver only has to handle a few milliwatts of power. By using several Darlingtons in parallel, load currents in excess of 10 Amps are possible. Fig. 3 shows two Darlington pairs in parallel with a single driver for high current applications.

The last bench supply that I built ended up as a mass of sticky goo because I had felt that current limiting wasn't necessary. After I cleaned up the mess, I decided that a simple means of limiting current was in order. The system would have to limit supply current to a safe value for a reasonable time in case of a direct short. Well, after looking over numerous current limiter designs, I was ready to give up. Most of them used seven or eight transistors and required critical adjustments. There had to be a better way. There was.

A very effective current limiter can be made from one transistor. Fig. 4 shows the circuit I ended up with. It's based on the principle that every silicon transistor has a .7 volt drop across its base emitter junction. Now if you were to sense a .7 volt drop at some critical current value, this voltage could be used to turn on a transistor which could disable the power supply by dropping its output voltage low enough to keep the pass transistor cool. This is exactly what's happening in Fig. 4. R5 determines the amount of output current that will shut down the power supply. Q10 requires .7 volt across its base emitter junction to switch on. All we have to do is find that value of resistance that will have a .7 volt drop at the value of current that we want to limit the supply to. Only one Ohm's Law problem is required, so don't get discouraged now. Using the example in Fig. 4, let's set the circuit up for a current limit of 3 Amps. As per Ohm's Law, 3 Amps and .7 volt would give us .233 Ohms as a value for R5. In other words, there will be a .7 volt drop across a .233 Ohm resistor when 3 Amps flow through it. Connecting each end of the resistor to the base and emitter junctions will turn this transistor on when the current value of 3 Amps is reached. When Q10 turns on, it removes the drive of the pass transistor, which drops output voltage to that value which permits only 3 Amps to flow. That's all there is to it. Whenever a dead short draws more than 3 Amps, the power supply current is instantly limited to 3 Amps and no more. The pass transistor can handle this kind of current for quite a long time, thus eliminating the need to clean up another sloppy mess.

I hope some of the ideas I have presented will make your next power supply more fun to build as well as use. The topics I have covered are not new in any way, nor are they original. They have been around for quite a while. I think you'll find, as I did, that the humble power supply still captures the home brewer's attention much as it did when radio was new. Have fun. ■

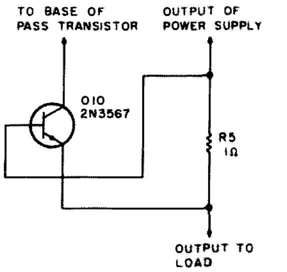

Fig. 4. A one transistor current limiter. R5 is chosen to produce a .7 volt drop across it when the desired current limit has been reached.

Looking West

'rom page 137

Originally started by Jim Hender-shot WA6VQP of Westlink and Wayne Rankin WA6MPG of the Los Angeles 220 Simplex Committee, the News-tape staff is now up to five, including Kent Marshall W5TXV of Houston, Texas, Otto Arnosht WA6RMX of Los Angeles, and, when time permits, yours truly. This does not count about another dozen or so contributors scattered all over the nation who provide additional input.

Further information on this new concept of news dissemination can be had by dropping a note to Westlink, 12731 Rajah Street, Sylmar CA 91342. For those wishing to contribute items for the service, this can be handled in one of two ways. If it's of a timely nature, you can call (213)-367-7228 after February 1 and leave a message of any duration on the answering machine that takes your call. As long as you keep talking, it will continue to take a message. For now, however, record your news item either on standard ¼-inch tape at 7½ ips or on a tape cassette, and send it to the above address. Be advised that if you want your tape returned, postage must be included. That's the Westlink story to date: amateurs of goodwill devoting their time and talents freely to all amateurs — and in this fast-paced day and age, that's almost a rarity.

NARC PLAN WINNING NATIONAL ACCEPTANCE

As more and more reports begin to filter in to us, it's beginning to look as if the 144.5 through 145.5 MHz band plan originated by California's Northern Amateur Relay Council is gaining in popularity nationally. As I said when I detailed it last month, to date it's the most sensible approach — other than perhaps translators — to populating this newly-released relay spectrum. In a note from Doug Barker WA4HQL, Georgia Repeater Frequency Coordinator, I have learned that they support this as well as the inverted tertiary plan for the upper two megahertz of two meters. Kent Marshall W5TXV, who visited Los Angeles this past week, informed me that the Central States Committee held a directors meeting by telephone and endorsed the NARC plan — with the proviso that the ARRL commit itself to obtaining Technician class privileges down to 144.0 MHz. He also told me that his area of Texas, coordinated by the Texas VHF Committee, has taken a different attitude

Continued on page 151

Joseph J. Carr K4IPV
5440 South 8th Road
Arlington VA 22204

Op Amp Insights

-- part I

In the amateur and hobbyist press, articles on operational amplifiers seem to fall into two distinct categories. One type is merely a collection of circuits with no real indication of how they work or how the formulas used (if given at all) were derived. The other class of article approaches the subject from the viewpoint of the engineer and presents a lot of feedback theory. While the first approach appeals to the casual tinkerer, and the other to the engineer's professional needs, they offer little to the middle-level amateur and hobbyist who wants more than the casual introduction to operational circuit design. In this article I will examine the gross properties of the operational amplifier and the derivation of the design equations using only Ohm's and Kirchhoff's Laws.

One of the profound beauties of the IC operational amplifier is its simplicity when viewed from the outside. Of course, the internal workings are often very complex, but they need not concern us here. We examine the properties of the operational amplifier as if it were the proverbial black box, and that allows for a very simple analysis in which we relate the output voltage to the input voltage and how the op amp affects this relationship.

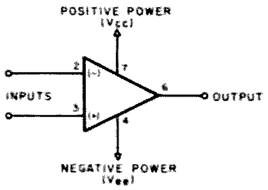

Fig. 1. Basic operational amplifier symbol. Note: Pin numbers are shown for the 741 minidip and metal can packages and are considered "industry standard," but check any non-741 minidips with the spec sheet before using.

Ideal Op Amp Properties

An ideal operational amplifier is an IC gain block, or black box, that has the following general properties:

1. Infinite open-loop (no feedback) voltage gain (A_{vol} = infinity).
2. Infinite input impedance (Z_{in} = infinity).
3. Zero output impedance ($Z_{out} = 0$).

Of course, we do not seriously expect real operational amplifier IC devices to meet these ideal specifications, but, if we read "infinite" as very, very high, and "zero" as very, very low, our approximations are very nearly correct.

Differential Inputs

Fig. 1 shows the basic symbol for common operational amplifiers, including power terminals. In many schematics using op amps, the Vcc and Vee power terminals are deleted, so the drawing will be less crowded. Note that there are two input terminals, labeled (-) and (+). The terminal labeled (-) is the inverting input. The output signal will be out of phase with signals applied to this input terminal. The (+) input is a noninverting input, so output signals will be in phase with signals applied there. It is very useful to realize that these input terminals have equal open-loop gains, so they will have equal but opposite effects on the output voltage.

At this point, let's add one further property to the list above: 4. Differential inputs tend to follow each other. This means that they will tend to behave as if they are at the same potential under static conditions. In Fig. 2 we see an inverting follower circuit in which the noninverting input (+) is grounded. The fourth property allows us to treat the inverting input as if it were also grounded. Many texts like to call this phenomenon a "virtual ground," but that is a term which merely serves to confuse. It seems better to accept as axiomatic that the (-) input will appear grounded if the (+) is really grounded, for purposes of calculations.

Using Kirchhoff and Ohm

We know from Kirchhoff's current law that the sum of all currents entering and leaving a point in a circuit must be zero. The total current flow into and out of point A in Fig. 2, then, must be zero. Three possible currents exist at this point: input

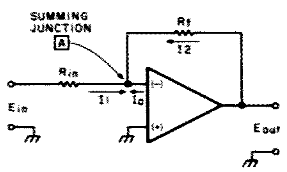

Fig. 2. An inverting follower circuit.

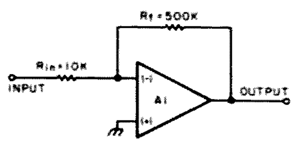

Fig. 3. Gain of 50 inverting follower.

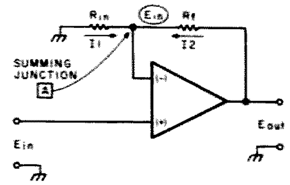

Fig. 4. A noninverting follower circuit.

current, I1; feedback current, I2; and any current flowing into or out of the (-) input of the operational amplifier, I_o. But, according to ideal property #2, the input impedance of this type of device is infinite. Ohm's law tells us that by:

$$I_o = E/Z_{in}, \tag{1}$$

current I_o is zero ($E/Z_{in} = 0$). So, if current I_o is equal to zero, we conclude that I1 + I2 = 0 (Kirchhoff's Law). Since this is true, then:

$$I2 = -I1. \tag{2}$$

We also know that:

$$I1 = E_{in}/R_{in}, \tag{3}$$

and:

$$I2 = E_{out}/R_f. \tag{4}$$

By plugging (3) and (4) into (2), we get:

$$I2 = -I1, \tag{5}$$

$$E_{out}/R_f = -E_{in}/R_{in}. \tag{6}$$

Solving for E_{out} gives us the transfer function normally given in op amp articles for an inverting follower amplifier:

$$E_{out} = -(R_f/R_{in}) \times E_{in}. \tag{7}$$

The term "R_f/R_{in}" is the voltage gain factor and is usually designated by the symbol A_v:

$$A_v = -(R_f/R_{in}). \tag{8}$$

Sometimes (7) will be written using (8):

$$E_{out} = -A_v E_{in}. \tag{9}$$

When designing simple inverting amplifiers using op amps (such as the low-cost 741 device), use equations (7) and (9). Let's look at a specific example. Assume that we want an inverting follower with a gain of, say, fifty. Furthermore, we want to drive this amplifier with a source that has an output impedance on the order of 1000 Ohms. By the rule of thumb normally used, we would want an input impedance of not less than 10k. This last requirement sets the minimum value of R_{in} at 10k Ohms.

$$A_v = R_f/R_{in}, \tag{10}$$

$$50 = R_f/10{,}000, \tag{11}$$

$$500\text{k Ohms} = R_f. \tag{12}$$

Our gain of 50 amplifier will look like Fig. 3.

Noninverting Followers

The inverting followers of Figs. 2 and 3 suffer badly from low input impedance, which is limited to the value of R_{in}. This problem becomes especially acute when we try to get even moderately high gains from low-cost devices. There are some costly IC operational amplifiers which will allow use of 0.5 - 1.0 megohm input resistances, but these are not altogether economical for amateurs. The noninverting follower of Fig. 4 remedies the input impedance problem nicely, because it has a very high (ideally, infinite, remember?) input impedance.

We can again resort to Kirchhoff's Law to derive the transfer equation from our four properties. By property #4, we know that the inputs will tend to follow each other, so the (-) input can be treated as if it were at the same potential as the (+) input, which is E_{in}, the input signal voltage. We know that:

$$I1 = I2, \tag{13}$$

$$I1 = E_{in}/R_{in}, \tag{14}$$

$$I2 = (E_{out} - E_{in})/R_f. \tag{15}$$

Plugging (14) and (15) into (13) results in:

$$I1 = I2, \tag{16}$$

$$E_{in}/R_{in} = (E_{out} - E_{in})/R_f. \tag{17}$$

Solving (17) for E_{out} gives us the transfer function normally given for a noninverting follower. Multiply (17) by R_f:

$$R_f E_{in}/R_{in} = E_{out} - E_{in} \tag{18}$$

Add E_{in} to both sides:

$$R_f E_{in}/R_{in} + E_{in} = E_{out} \tag{19}$$

Factor out E_{in}:

$$E_{in}\,[(R_f/R_{in}) + 1] = E_{out} \tag{20}$$

In this discussion we have arrived at both commonly given operational amplifier transfer functions, using only the four most basic defining properties of the device, Ohm's Law, Kirchhoff's Law, and an assumption that the operational amplifier is merely a feedback device that generates a current to cancel the input current. Fig. 5 gives a synopsis of the characteristics of the most popular operational amplifier configurations. The unity gain noninverting follower of Fig. 5(c) is a special case of the circuit in Fig. 5(b), in which $R_f/R_{in} = 0$. That makes the transfer equation equal to:

$$E_{in}\,(0 + 1) = E_{out}, \tag{21}$$

$$E_{in}\,(1) = E_{out}, \tag{22}$$

$$E_{in} = E_{out}. \tag{23}$$

Op Amp Power Supplies

Although almost every circuit using operational amplifiers published in one amateur publication has a power supply of single polarity, the device is designed to operate from bipolar supplies. The design policy above is given ostensibly so projects can be used in mobile applications, but, recognizing that the amateur world need not revolve around mobile operation, I prefer to use the power supply arrangement intended by the manufacturer. There are two power terminals on the IC op amp case marked "Vcc" and "Vee". The Vcc is to be connected to a supply that is positive to ground, while the Vee is to be connected to a source that is negative to ground. This is shown in Fig. 6. Keep in mind that, although batteries are shown, regular power supplies may be used as well. Typical values for Vcc and Vee range between ±6 V dc and ±18 V dc, with most being ±9, ±12, or ±15 V dc. There is also one further

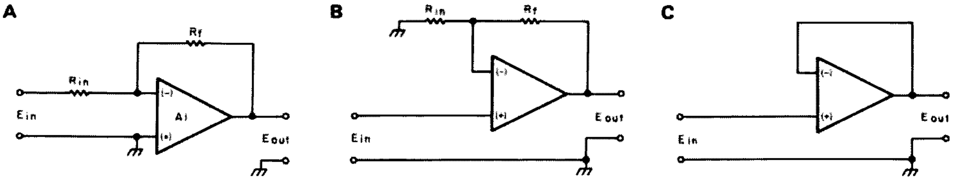

Fig. 5. Synopsis of op amp amplifier configurations: (a) inverting follower: $E_{out} = -E_{in}(R_f/R_{in})$. $Z_{in} = R_{in} \parallel R_f$. $Z_{in} \approx R_{in}$ (if $R_{in} < R_f$). Voltage gain: Open loop (A_{vol}): ∞; Closed loop (A_v): $-R_f/R_{in}$. *In real operational amplifiers, this is actually very high, not infinite. Values between 20,000 and more than 1,000,000 are typical, depending upon type; (b) noninverting follower with gain: $E_{out} = E_{in}\,[(R_f/R_{in}) + 1]$. $Z_{in} = \infty$ (well, almost); (c) unity gain noninverting follower: $E_{out} = E_{in}$. $Z_{in} = \infty$ (well, almost).*

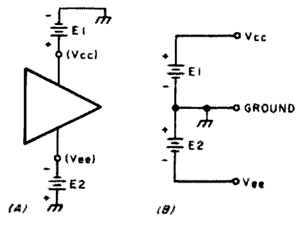

Fig. 6. Operational amplifier power supply configuration.

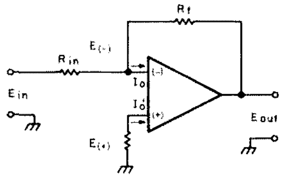

Fig. 7. Compensation resistor (R_c) is used to eliminate the effects of the offset currents. This resistor has a value equal to the parallel combination of R_{in} and R_f. $I_o = I_o'$; $E_{(-)} = (R_{in} - R_f)\, I_o$; $E_{(+)} = R_c\, I_o'$; $E_{(-)} = E_{(+)}$.

restriction placed on some IC operational amplifier power supplies, and that is that Vcc - Vee must be less than some specified voltage, usually 30 volts. So, if Vcc is +18 volts, the maximum allowable value for Vee is 30 - 18 volts, or 12 volts, negative with respect to ground, of course.

Real Op Amps: Some Problems

Before we can apply IC operational amplifiers, we must learn to appreciate certain limitations placed on certain of the real-world devices. Operational amplifier ICs have price tags that vary from less than half a dollar to many dozens of dollars each. The 741 and those devices in the same family (747, 1458, 1456, etc.) typically sell for a dollar or less and are suited for most amateur applications. Three main problems exist: offset current, offset voltage, and frequency response.

In real op amp devices, the input impedance is typically very high, but it is nowhere near the infinite impedance of the ideal op amp. This implies, then, that a small current exists to flow either in or out of each input. In other words, I_o of Fig. 2 is not zero, so it will produce an output voltage equal to $-I_oR_f$. The cure, shown in Fig. 7, is to place a compensation resistor between the non-inverting input and ground. This works because the currents in the respective inputs (I_o and I_o') are approximately equal. Since resistor R_c is equal to the parallel combination of R_f and R_{in}, it will generate the same voltage drop as appears at the inverting input. The resultant output voltage is zero, because the two inputs have equal but opposite effects on the output.

Output offset voltage is the value of E_{out} that will exist if the input end of R_{in} is grounded ($E_{in} = 0$). In the ideal device, E_{out} would equal zero, but, in real devices, there may be some offset voltage present. This output potential can be forced to zero by any of the circuits in Fig. 8.

The circuit in Fig. 8(a) uses a pair of offset terminals found on many operational amplifier ICs. Many IC op amps use this technique, but, for those which lack the terminals, we may use the circuit of Fig. 8(b).

The offset null circuit of Fig. 8(b) creates a current flowing through resistor R1 to the summing junction. The offset current may flow into or out of the op amp input, so the null control must be able to supply currents of either polarity. Because of this requirement, the ends of potentiometer R2 are connected to Vcc and Vee.

In many cases, it is found that the offset is small compared with normally expected values of E_{in} and E_{out}. This is especially true of low gain circuits, in which case the nominal offset current will create such a low output error that no action whatever is taken. In still other cases, the offset of each stage in a cascade chain may be small, but their cumulative offset, when multiplied by the gain of succeeding stages, is large. In that situation, it is usually sufficient to null only one stage late in the chain, possibly the output stage, or the stage that contains any gain or "sensitivity" controls that might be used.

In those circuits where the offset is small but critical, it may be useful to replace R1 and R2 of Fig. 8(b) with one of the networks of Figs. 8(c) to 8 (e). These perform essentially the same job, but they produce a limited null current range for a large change of potentiometer setting. That is to say, they have smaller range but greater resolution per turn, provided that a ten-turn potentiometer is used. In the example of Fig. 8(c), the total resistance of the network is approximately the same as in Fig. 8(b), but most of it is taken up in fixed resistors. Although these are shown as 10k Ohms in the figure, it is frequently necessary to experiment with these values and the value of the potentiometer in order to optimize performance. The circuit of Fig. 8(d) is essentially the same as that of Fig. 8(c), except that a pair of zener diodes are used to set the lower voltages appearing at the ends of the potentiometer. In most cases, these diodes will have equal zener voltage ratings, but, in some instances, there are needs for different positive and negative extremes.

The last circuit, shown in Fig. 8(e), uses two null networks. One is for coarse and the other for fine adjustment of the null. The coarse control is not unlike that of Fig. 8(b), while the fine more closely resembles Fig. 8(c). The coarse control is used to bring the offset into the ball park when the fine control is set to the approximate middle of its range. The fine control is then varied to optimize the null. ■

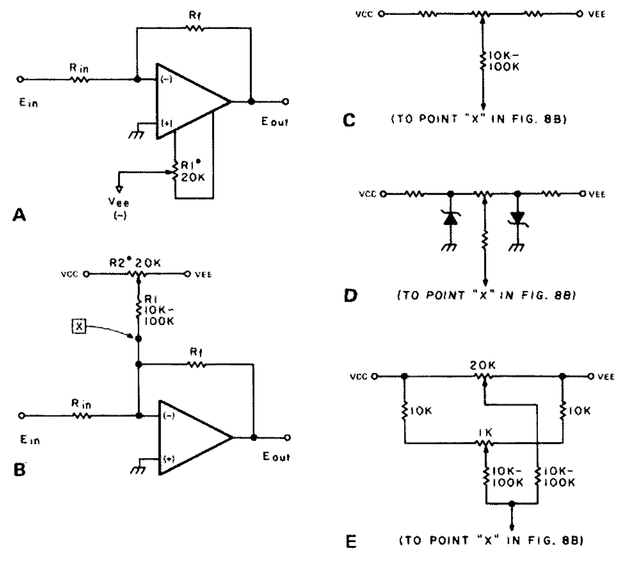

*Fig. 8. Offset voltage null circuits: (a) using the op amp's null terminals; (b) using a current applied to the inverting inputs; (c) better resolution version of (b) and (c), similar to (c), except that zener diodes are used; (e) use of two parallel null controls to produce coarse and fine adjustment. *Should be 10-turn trimpot.*

References

[1] Bannon, Edward, *Operational Amplifiers: Theory and Servicing*, Reston Publishing Company, Reston VA, 1975.

[2] Barna, Arpad, *Operational Amplifiers*, Wiley-Interscience, New York, 1971.

[3] Carr, Joseph J., *Op Amp Circuit Design and Applications*, TAB Books, Blue Ridge Summit PA, 1976.

[4] Graeme, Jerald G., Tobey, Gene E., and Huelsman, Lawrence P. (ed), *Operational Amplifiers — Design and Applications*, McGraw-Hill Book Company, New York, 1971.

[5] Graeme, Jerald G., *Applications of Operational Amplifiers — Third Generation Techniques*, McGraw-Hill, New York, 1973.

[6] Jung, Walter G., *IC Op-Amp Cookbook*, Howard W. Sams and Co., Indianapolis, 1974.

[7] Stout, David F. and Kaufman, Milton (ed.), *Handbook of Operational Circuit Design*, McGraw-Hill Book Company, New York, 1976.

Home Brew An Elephant!

Hams needed for the move to Pasadena. The sign says "Hams do it with more frequencies."

John W. Kuivinen WB6IQS
3426 Duke Ave.
Claremont CA 91711

Cal Poly's award-winning 1977 microprocessor-equipped Rose Parade entry was aided by amateur radio. It's not easy to move a sixteen-foot high, forty-foot long, thirteen-ton elephant from Cal Poly University at Pomona to Pasadena's Rosemont Pavilion. The twenty-seven mile trip required a month of planning and special permits from all the cities along the way.

The move was aided by local hams in the long trek to the final assembly site. WR6ACD hams volunteered for the "duration," leaving Pomona on December 23, 1976, about 1:00 am and arriving in Pasadena at 8:30 am. Numerous breakdowns and difficulties with the hydraulic system delayed the arrival of the float until the early morning rush hour was well under way. The hams used 94 simplex to keep communications between the police escort, float, and convoy vehicles.

Many donations were necessary to make this float a reality. The two front legs were loaned by Northrop Aviation and were originally designed to be F-5E landing gear for a jet fighter. Rockwell International donated a set of PPS-4 microprocessor chips and developmental hardware to use in controlling the animation and monitoring the instrumentation on the float. There is a very long list of donors for the 1977 Rose Float; it would be impossible to list them all.

The project was entirely a student-run volunteer effort by the joint campuses of Cal Poly Pomona and San Luis Obispo. Most of the flowers were grown on the campuses

Access door to the operator's positions.

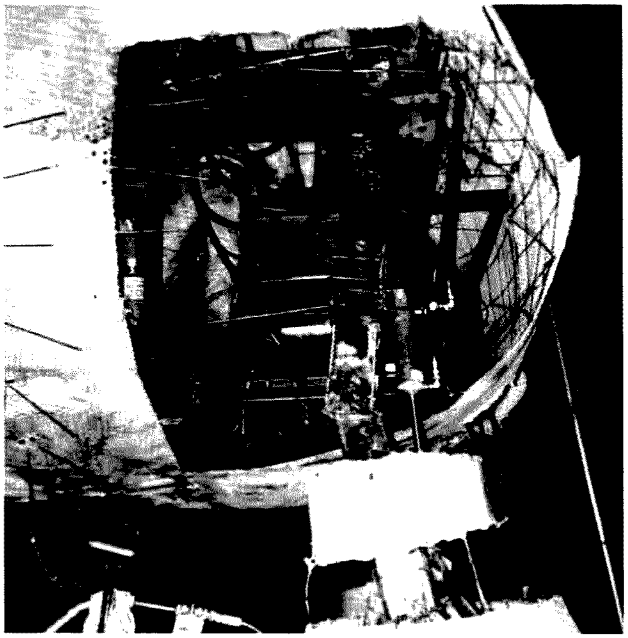

Construction of the mother elephant's hip.

and money was raised by the students through the sale of flowers, raffle tickets, and various community activities.

The float was unique in several ways. One: There was not a pod under the elephant. In most floats, the pod hides the main drive motors and supports the structure; however, Cal Poly's entry had the legs standing directly on the ground. The main drive power was through hydraulic motors in the rear legs with the front legs used to steer. Two: The forty-five second animation sequence was controlled by a system containing the microprocessor, a Master Animation Controller (MAC), and manual controls. The float used limit switches for feedback to signal the end of a particular unit's travel.

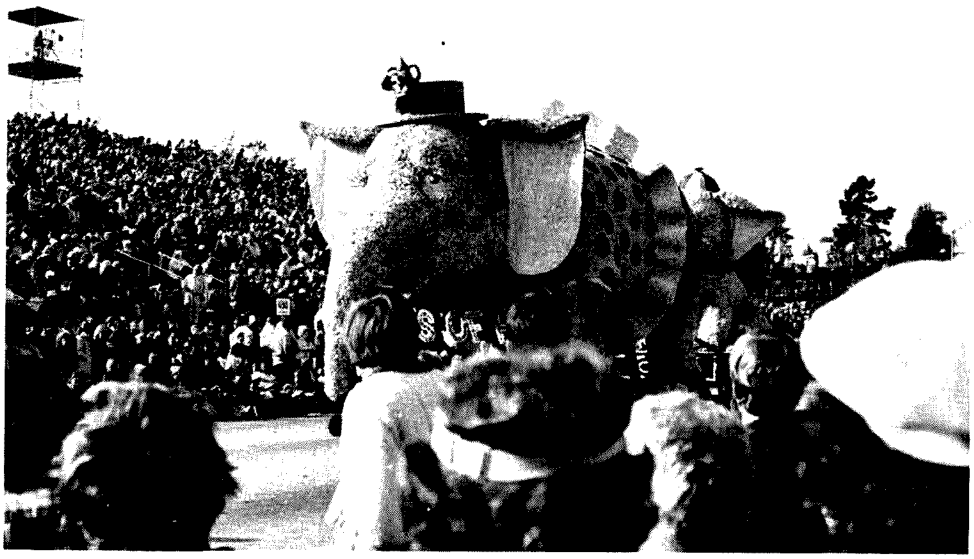

Mother elephant and baby going down the parade route.

The animation was very complex, requiring twenty channels of information, including motions for both elephants' heads, eyes, and ears, the mother's trunk, the baby's legs, and both propellers on the baby. Originally, the plans called for the mother elephant to roller skate down the parade route. Joints were placed at the shoulders, hips, and knees for hydraulic rams to be activated by a series of programmed leg motion commands to simulate a kind of smooth walking motion. Unfortunately, the lack of time and suitable hydraulic equipment prevented these motions from being completed.

Many thanks to the following hams: WA6CYY, WA6HFF, WB6EAP, WB6BKA, WA6UZP, WB6 OOQ, and WA6RJN. ■

Social Events

ROYAL OAK MI
JAN 8

The Oak Park Amateur Radio Club's Ninth Annual Swap n' Shop will be Sunday, January 8, 1978, at the Frost Junior High School in Oak Park (north of Nine Mile on Scotia). Talk-ih on 52/52. Admission is $2 – ample table space. Hours are from 8 am to 3 pm. Prizes and refreshments. For further into, write to: Lee Ricelli WA8RNB, 118 South Pleasant, Royal Oak MI 48067.

SOUTH BEND IN
JAN 8

A Swap & Shop will be held January 8, 1978, at the New Century Center in downtown South Bend by river on U.S. 31 Oneway North across from St. Joseph Bank Building. Half acre in one large room at ground level of entrances and loading dock. Four lane highways to door from all directions. Talk-in on 52-52 and area repeaters.

RICHMOND VA
JAN 15

The Richmond, Virginia, Winterfest will be held on January 15, 1978, at the Bon Air Community Center, sponsored by the Richmond Amateur Telecommunications Society. ARRL coordinated. Technical symposium, drawing, home brewers contest – 2 divisions, over 18 and under – with framed certificate to winners with Most Original Idea, Best Mechanical and Best Electrical Construction. FCC exams will be administered, starting at 10 am – to take exam, mail Form 610 at least five days prior to Fest to address below. Send SASE if you need Form 610. Commercial exhibits, indoor flea market, $2.00 (table included), outdoor frostbite tailgate flea market, $1.00. Admission $2, children under 12 free. RATS members excluded from contest and drawing. Talk-in on 28-88 and 52 simplex. Richmond Amateur Telecommunications Society, PO Box 1070, Richmond VA 23208.

WAUKESHA WI
JAN 21

The 6th Annual Midwinter Swapfest of the West Allis Radio Amateur Club will be held Saturday, January 21, 1978, starting at 8 am, at the Waukesha County Expo Center. Directions: I-94 to Waukesha Co. F, south to FT, west to Expo Center. Tickets are $1.50 in advance, $2.00 at the door; reserved tables are $1.50 in advance. Write: WARAC, PO Box 1072, Milwaukee WI 53201.

FORT WAYNE IN
JAN 22

The annual Fort Wayne Winter Hamfest will be held on January 22 at Shiloh Hall, north of Fort Wayne, from 8 am until 4 pm local time. Early parking is available and 28/88 and 52/52 will be monitored. This yearly event is sponsored by the Allen County Amateur Radio Technical Society (AC/ARTS). Admission is $2.00 at the door. Table space is available at $1.50 per half table (about 4 feet).

WHEATON IL
FEB 5

The Wheaton Community Radio Amateurs will hold their 16th Annual Midwinter Swap & Shop on Sunday, February 5, 1978, from 8 am to 5 pm, at the DuPage County Fairgrounds on Manchester Road (near County Farm Road) on the west side of Wheaton, Illinois. Some tables will be provided, but bring your own if possible. The WCRA invites anyone with an interest in buying or selling new or used electronic equipment to attend this hamfest, which will be inside four large heated buildings at the fairgrounds. Advance tickets (available until January 23) are $1.50, and tickets at the door are $2.00. Checks should be made payable to the club. Write Don Snyder WB9VFC, 623 Meadows Boulevard, Apartment 3C, Addison IL 60101.

Oscar Orbits

Oscar 7 Orbital Information

Orbit	Date (Jan)	Time (GMT)	Longitude of Eq. Crossing °W
14311 8bn	1	0038:32	65.2
14324 Bbn	2	0132:50	78.8
14336 Abn	3	0032:10	63.7
14349 Bbn	4	0126:27	77.3
14361 Bbn	5	0025:48	62.1
14374 Abn	6	0120:05	75.7
14386 Bbn	7	0019:26	60.5
14399 Bbn	8	0113:43	74.1
14411 Abn	9	0013:03	59.0
14424 Bbn	10	0107:21	72.6
14436 Bbn	11	0006:41	57.4
14449 Abn	12	0100:58	71.0
14461 Bbn	13	0000:19	55.8
14474 Bbn	14	0054:36	69.4
14487 Abn	15	0148:53	83.0
14499 Bbn	16	0048:14	67.9
14512 Bbn	17	0142:31	81.4
14524 Abn	18	0041:51	66.3
14537 Bbn	19	0136:09	79.9
14549 Bbn	20	0035:29	64.7
14562 Abn	21	0129:46	78.3
14574 Bbn	22	0029:07	63.2
14587 Bbn	23	0123:24	76.7
14599 Abn	24	0022:45	61.6
14612 Bbn	25	0117:02	75.2
14624 Bbn	26	0016:22	60.0
14637 Abn	27	0110:40	73.6
14649 Bbn	28	0010:00	58.4
14662 Bbn	29	0104:17	72.0
14674 Abn	30	0003:38	56.9
14687 Bbn	31	0057:55	70.5

John Pilson K1UZ
PO Box 27
Saunderstown RI 02874

Transistor Primer

I have found that, in many cases, hams are unaware how transistors really work. Although it might only be necessary in some cases to memorize what an NPN or a PNP transistor looks like, understanding how they work can be extremely beneficial.

This article should help the beginner who does not have much of an inkling of how these solid state devices perform their magic. It will not go into all those fancy names like CMOS, MOSFET, etc. I chose not to do this for only one basic reason, and that is that I do not have the knowledge, at this time, to get into a full-fledged highly technical article on this subject.

Don't stop reading now and put this article off, unless you know your stuff about transistors. You Novices and would-be Novices, pay attention. There are a few questions on the higher class exams relating to transistors, so it might pay to refresh yourself before you take the "big step."

The Transistor

In a transistor of common variety, there are three elements which do the work. They are the emitter, the base, and the collector. If it helps you, these correspond to the cathode, grid, and plate of a vacuum tube. Thus, the terms of tube amplifiers have corresponding transistor terms; e.g., grounded grid becomes grounded base, cathode follower becomes emitter follower, and so on.

The transistors we are dealing with are of two basic types, NPN and PNP. They are shown in Fig. 1. As can be seen, the only difference between NPN and PNP drawn schematically is the direction of the little arrow inside the transistor. This arrow points *opposite* to the direction of current flow, which is shown in the circuit by the two arrows outside the transistor.

How They Work

Take a look at Fig. 2(a). It shows a transistor (NPN in this case) amplifying the sound from the microphone and delivering it to a speaker. The power source is a battery, with the polarity marked.

What happens in this circuit is that, when activated, the microphone *pulls* electrons from the base region in this transistor, allowing a flow of electrons from the emitter to the collector. How loud the sound is that the microphone picks up controls how much flow of current from the battery there will be, and, consequently, how much sound there will be radiated by the speaker. Thus, an accurate reproduction of the original signal is achieved. This idea is demonstrated in Fig. 2(b). Bear in mind that this circuit is a simplified one, and, in actual practice, there will be some other components thrown in to confuse you — but the theory of operation is the same.

Now that wasn't so tough, was it? All that happens is that some electrons are pulled out of the center (base) region, and that allows current to flow between the other two regions (emitter and collector). The current from the battery "adds" to the signal, hence the amplifying effect.

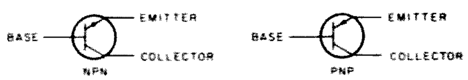

Fig. 1. The two basic types of transistors.

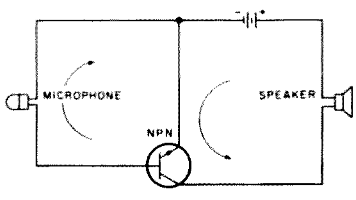

Fig. 2(a). NPN transistor as a simple audio amplifier.

Recommended Reading

It would be very helpful for you, at this point, to read further about how transistors work and are made. One book that I have found to be very good at explaining what I've just tried to explain, and which does so in great detail, is *Understanding Solid State Electronics*, which is put out by Texas Instruments and can be found at most Radio Shack stores. Much of the basic information contained in this article was taken from that book.

Conclusion

You now understand how the basic transistor works. It's absolute simplicity. Of course, you will certainly meet harder terms as you learn more about how different types of transistors work, such as: overlay effect, forward biasing, alpha cutoff frequency, etc. But, for now, you don't care about that, since you know what makes the simple NPN tick, and that's good enough ... for now at least. ■

Fig. 2(b). Comparison of the original signal (left) with the signal after amplification.

C. Richard Sealey, Jr. WA4HVH
3722 Rolling Road
High Point NC 27260

I Love My GTX-I

- - user report on the Genave HT

With the advent of VHF-FM and repeater operation a few years ago, keen interest in extremely portable, reliable and convenient local communications took a big upsurge. Manufacturers followed suit by introducing a greater variety of equipment to entice the desk-bound ham into increasing his operating time and combining this new-found fun with activities heretofore not associated with hamming.

All sorts of equipment is now available, ranging from moderately sized vfo and synthesized multi-mode units to relatively small, crystal controlled, channelized hand-held units, and rigs slightly larger, such as the TR-22, the Icom units and others. And it's these last two categories to which I am directing my attention.

A couple of years ago I bought a Drake TR-22 with the idea of using it as a combination mobile and hand-held type of unit. It worked rather well from the car, but proved to be much too cumbersome as a hand-held. There is nothing quite like walking around with a mobile rig strapped to your shoulder, your arm tangled up in the mike cord, the telescoping antenna poking you in the eye, and all the while exclaiming, "Boy, oh boy, isn't hamming fun!" Somehow, this wasn't "where it was at." Also, I noticed a creeping paranoia which was besetting me, and it was especially noticeable whenever I left the rig unattended in the car. CB thieves are everywhere and hamming *is* supposed to be fun, free from both worry and filing forms with the local authorities.

Meanwhile, a friend of mine had recently purchased a used HT-220 slimline which had been converted to the 2 meter band. In it were crystals for the two local repeaters, the maximum number of frequencies it could hold. This rig seemed to be the way to go. It was small, lightweight, convenient, and worked like a champ. However, for my preference, the frequency limitations proved to be too restricting, and besides, with a few rare exceptions, those things are damn expensive. And if you want more frequencies, you need to convert to the "omni" version. This adds to the cost, size, and weight. So, it seemed that further searching was necessary.

I began to scrutinize all the ads and other material I could find on hand-held units. Meanwhile, the ham club of a school at which I was taking some courses acquired a Wilson 1402-SM and allowed me to use it for a while. It worked very well. It had a solid 2.5 Watts output, the receiver was extremely sensitive, and it had good selectivity and intermod rejection. But there were certain things I didn't really like about it – like not being able to see anything but the speaker grill while transmitting. I never could understand why they put the mike element at the bottom of the case. It certainly is no telephone receiver. Also, the unit was too large. It just wasn't particularly comfortable to carry, especially if you don't have "King Kong" hands. So my search continued.

After looking at just about everything that everyone makes in hand-helds for the amateur market, there seemed to be only one that might meet the criteria which I had set for myself – the Genave GTX-1T. The specs looked good and the size was rather small as compared with everything else on the market except the HT-220 slimline. But, the price was a little high relative to some others. So I considered it, and pondered over it, and tried to find someone that owned one. But, alas, no luck. They were too new to the market, and all everybody wanted was a Wilson, anyhow. So, one day I impetuously decided to take the plunge. Off to the bank I went, forcing myself to think only of the great fun and operating pleasure I was going to experience with my new "mini hand-held." (That's what Genave calls it.) So I mailed my order and waited.

After about a three week wait, I woke up one morning and asked myself, "Why am I waiting?" After all, I had sent them a certified check for a GTX-1T, 4 sets of crystals, and a leather case. And their ad had boasted, "Hurry! Still time for Christmas delivery." Well, Christmas had just passed and I sure as hell wasn't waiting until the following Yuletide season. So I utilized the services of "Ma Bell" and gave them a call. The very nice people at Genave advised me that they

		Factory	My Results
Receiver Sensitivity (20 dB of quieting)		0.15 uV	0.14 uV
Squelch Threshold Sensitivity		0.07 uV	0.05 uV
Power Output	(High)	3.5 W	3.3 W
	(Low)	Not Given	800 mW
Battery Drain	(High xmit)	Not Given	470 mA
	(Low xmit)	Not Given	170 mA
	(Squelched Rcve)	Not Given	34 mA
Spurious Output		Not Given	None to -60 dB

Table 1.

were making some production changes and circuit modifications to my unit and it would be a couple of weeks before they shipped. Again, I waited. Finally, after one more phone call and a little more waiting, it arrived. I unpacked it and carefully inspected it for damage — none! So I inserted eight "AA" nicads into the battery pack (that's right, it uses only eight) and put the pack into the rig. I turned the unit on, adjusted the squelch, selected a local repeater frequency and "hit" the button. "Whadyaknow, it works." And it sounded pretty good, too. So for the next test I gave a friend of mine a call and asked for a report. He said it sounded good, with very good audio quality, but the level might be a little low. Apart the unit came and an adjustment of the deviation control corrected the low audio.

After a few weeks of operating, all subsequent reports were favorable. And everyone wanted to know the "scoop" on the unit. And, of course, I wasn't about to let them wander off in ignorance. After all, I had done a great deal of detective work prior to my purchase, and I wanted everyone to know I had done well. And I had, too. The darn thing is small, about an inch longer than the HT-220 slimline but otherwise near the same dimensions. In other words, it doesn't require both hands to grip it. It is thin (1.25 inches, except for the speaker area), not too wide (just slightly greater than 2.5 inches), and comfortable. It's a shame the ad pictures make it appear larger than it is. The only possible physical drawback may be its weight: approximately 2.25 pounds. But, I guess we all need a little more exercise.

Aside from being a handy size and very attractive, the GTX-1T performs very well, meeting or exceeding all factory specs. And it boasts some nice features as well. It has provisions for 6 crystal control channels, a high/low power output switch, a tremendously sensitive receiver, good audio quality both in and out, and a clean signal. Genave also included a quality control lab test report with my rig. This included specifications information of my individual unit. Now, how long has it been since you've seen that with a piece of ham gear you bought?

One day I decided to get together with some test equipment and really check the unit against the factory specs. Most of the gear was Hewlett-Packard and the way things tallied is shown in Table 1.

I should also include that the unit features a dual conversion superhet receiver with standard 10.7 MHz and 455 kHz i-fs and a six pole crystal filter. And since the unit is really their commercial handheld tuned to the 2 meter amateur band, there are other niceties such as shielded pots, a sealed rotary switch, G-10 glass epoxy boards, and rugged construction.

Although component density is rather high, general maintenance and service are eased, somewhat, by incorporating two printed circuit boards, the transmitter board and the receiver board, oriented component side to component side, sandwich fashion. Accessibility to them is gained by snapping the back off the unit, which exposes the battery pack and the bottom of the receiver board. Five screws are then removed from the board and the board lifted from the case and moved laterally to extend beyond the edge of the case. Two screw holes on the right side of the board are aligned with the two retaining tabs on the left side of the case, two screws are inserted and tightened, and the board is secured for servicing with easy access to the component side of both boards and the foil side of the receiver board. Getting to the foil side of the transmitter board requires further surgery.

Well, there you have it, the whole kit and kaboodle. I've had the unit for eight months, in constant use, and have experienced no problems. I got the built-in touchtone encoder with mine and it works very well. You can have it either way: the GTX-1 without the encoder, and the GTX-1T with the encoder. Included with either rig is an exceptional owner's manual, very complete and informative.

So, if you are in the market for a 2 meter handheld of high quality and excellent performance that's thin enough to stick in your back pocket, you might consider doing as I did and get a GTX-1T. ■

Looking West

from page 141

and at present was only going to commit itself to coordination of three of the prime 60 kHz channels and see what type of activity develops. Pat Corrigan KH6GQW informed me through Bill Orenstein KH6IAF that Hawaii was solidly behind the NARC plan, and I have received similar input from the New York/New Jersey area and New England. Finally, if the rumors we received at Santa Maria are any indication, the ARRL is also squarely behind the NARC proposal, and it would surprise me to see them adopt anything else. In short, it looks as if the guys and gals up in Northern California have come up with a winner, and have done so with very little time to work up the proposal. Finally, and for what it may be worth, unless something far better comes along — a plan that provides relay communication without FM repeaters — I, too, endorse the NARC plan as being the most logical approach to solving a rather difficult situation. I'm also grateful to Jay O'Brian W6GO, for putting us in the position of being one of the first to detail it to you.

What about the non-repeater people, those involved in weak signal, long-haul SSB, EME, AM, and other narrowband modes? By and large they are far from happy, and many have already made it publicly known that they do not believe the promises of a non-channelized, non-FM segment between repeater inputs and outputs. They doubt the ability of any council or individual to enforce such a restriction. They cite the fact that synthesized FM equipment is channelized and the spectrum in question is technically open for anyone to use regardless of mode. They doubt if an amateur will QSY two megahertz just to get a simplex QSO, and figure that, councils and coordinators not withstanding, the spectrum will eventually channelize itself *unless they act to protect it.* In general, those now using this spectrum feel that repeaters and FM have no business whatever down there and, as for what the future holds . . . well, your guess is as good as mine. One thing is certain — the people there now have no intention of being kicked out, no matter the cost; many have made this quite clear. As one caller to the "Looking West" answering machine put it, "Promises are cheap . . . it's keeping them that's not possible."

NOT WITH IT DEPARTMENT

Since the technical committee

Continued on page 153

How It Was

- - the early days of radio

In my more than 65 years of association with radio (started in 1909), I've run into some more or less extraordinary and odd published angles, and it occurs to me that many readers of this magazine would also enjoy them.

As far as I have been able to learn, the very first printed article about radio in the United States appeared in the December, 1898 issue of *Frank Leslie's Popular Monthly*. It was a 7 page write-up entitled "Space Telegraphy" and had more than a half-dozen pictures and diagrams. It certainly makes fascinating reading!

After the construction of a coherer (about the earliest detector), it says, " ... metallic filings form a detector for electric vibrations of the greatest sensibility." Then it goes on to say: "Dr. Lodge has suggested the name 'coherer' for this piece of apparatus, and his investigations, together with those of a number of other scientists, have developed its possibilities and refined its sensitiveness until it exceeds all other instruments as a detector of electrical oscillations."

The final paragraph of this 1898 write-up appeals to me as being doubly interesting. It questions the future of wireless in some ways, but also does some interesting prophesying: " ... the Marconi apparatus cannot direct the waves it evokes and must expend at the sending station sufficient energy to fill to repletion the sphere of space of which the transmitter is the center and the receiver but a mere point on the surface. Applied to transmission over long distances, such an expenditure of energy becomes commercially appalling, so that unless some present unknown means of giving the waves in a predetermined direction shall arise, the reliable old wire along which the electric pulsations conveniently slip promises to remain a familiar object. In special cases, such as intercommunication between ships at sea, the transmission of signals between moving objects, as railway trains, or army corps, or in the emergency of a broken cable, wireless telegraphy may, and probably will, prove itself of immense value; but these are the exceptions rather than the rule ... Yet, the coherer is one of the great discoveries of the age."

Another interesting item appeared in *The American Monthly Review of Reviews* for June, 1899. In it is an article about Marconi by his engineer, Dr. Erskine Murray, who said: "Our messages seem to carry best in fog and bad weather; thunderstorms and electrical disturbances do not interfere in the least. The Earth's curvature makes no difference at all; these Hertzian waves follow around smoothly as the Earth curves. Messages can be sent to any distance given a sufficient height of wire – if you double the height of your mast you can send a message four times as far – the range of distance increases as the square of the mast's height. A horizontal wire, placed at whatever height, is of no value in sending messages – all that counts is the vertical component."

An item appeared on page 133 of *Radio Journal* for September, 1923, saying: "A prominent aircraft engineer, who conducted radio tests during a balloon race, insists that there is no static at an altitude of 3000 feet or over." It concludes: "Most of us can't live there, however."

One of the biggest "boo boos," I think, was published in *Radio Doings* for the week of Oct. 24-30, 1926. Under the general heading of "October in Radio History," this appeared: "1914. E. H. Armstrong was issued a patent covering the regenerative circuit, also known as the superheterodyne circuit." – Gosh!

In the issue of December 31, 1927, this same magazine had a full page advertisement headed up "Why Radio is Better with Battery Power." It went on to say, "A well-made B battery is the best form of 'b' power supply for all radio receiving sets. Best in quality of reproduction, more dependable, lower in cost, more economical in operation and most convenient ... the pure current (direct current) of the 'B' battery permits clear, rounded tones to come from the receiver. ... Radio is more dependable with battery power ..."

This one comes from page 77 of *Radio Doings* for Aug. 16, 1925: "The new flat cell 'B' battery recently announced by the National Carbon Co., makers of Eveready batteries, utilizes the new principle of patented battery construction by substitution of flat cells for cylindrical cells. More than 30,000 of these batteries have already been tested by users in actual service and from 30 to 52% longer life has been obtained under the same conditions of service as compared with any cylindrical cell batteries of the same external dimensions."

G. S. Corpe W6LM
P.O. Box 308
Wrightwood CA 92397

On page 75 of *Radio Doings* for July 19, 1925, this advice appeared: "If you live in a so-called 'dead spot' – that is, where you cannot receive certain stations – take off the ground connection on your receiver. This will make local reception better, at least."

The literature shows how even our greatest scientists and inventors can have wrong ideas. For example, Michael I. Pupin (1858-1935) was sure that radio signals were possible only with a return circuit through the earth. Quoting from his autobiography: "Every now and then we are told that wireless signals might some day be sent to the planet Mars. (Pupin) considers these suggestions unscientific for the simple reason that we cannot get a ground on the planet Mars and, therefore, cannot take it into close partnership with our Hertzian oscillations. Without that partnership, there is no prospect of covering long distances."

With a radio receiver in practically every car on the road now, it's interesting to look back and see how they were regarded 45 years ago. This is what *Radio Broadcast* magazine said in what undoubtedly is an editorial, although it is headed "Professionally Speaking," on page 200 of the February, 1930 issue. " . . . We venture to offer an opinion on this business of radios for automobiles. It seems to us that there are several people to be considered – the automobilist, the innocent bystander already bothered with noise from autos and in danger of being run over by one-arm drivers, and finally the set manufacturer. The automobilist has about all he can do now to stay on the straight and narrow. Are we to have one-arm drivers to add potential sources of accidents? And we cannot see how anyone could enjoy much radio music while journeying about in an auto. The rumble of the motor and of other cars' motors would completely mask out any low frequencies, even if they could be obtained from the small loudspeaker that will be put in the car. The pedestrian or dweller by the roadside is already complaining about traffic noise. The din from autos that pass your house, if equipped with radio sets, would be worse than your neighbor's set which may be very loud – it usually is – but is tuned to one program. Instead you would listen to a dozen programs at once going up and down the street. It is our opinion that the only people who will benefit by radios for automobiles are those who make – and sell – the sets. The technical difficulties of building a high-quality set for installation within the confines of the average car are almost insurmountable. The loudspeaker cannot be very efficient at low frequencies because there is not sufficient space available."

On page 309 of the April, 1930 same magazine (*Radio Broadcast*), we read this: "New Hampshire State Commissioner of Motor Vehicles Griffin says: 'New Hampshire is against automobiles equipped with radios which can be operated while the car is in motion. This department is satisfied that the greater percentage of accidents is due to inattention of drivers, and where a radio is being operated while the car is in motion, it certainly would tend to divert the attention of the operator.' "

Perhaps on a slightly more constructive tone, here are a couple of magazine clippings. This announcement was in the July 4, 1926 issue of *Radio Doings*: "The U.S. Civil Service Commission announces competitive examination for Radio Engineer, $3,800.00; Associate Radio Engineer, $3,000.00; Assistant Radio Engineer, $2,400.00." Perhaps we should explain these are annual salaries! Quite different from our present-day inflated figures!

This really interesting item was on page 80 of *Radio Doings* for Sept. 6, 1925: "A method of 'canning' radio broadcasts has been developed in Germany. The invention makes it possible to receive radio signals and retain them in the form received, so that they are accurately reproduced and released." How does this compare with our present-day instant reruns of TV?

To conclude, here are a couple of true comments on electrical matters, although not referring to wireless. The City of Los Angeles was first lit by electricity on its streets on the night of December 31, 1882. The Gas Company had vigorously opposed electric street lighting, and some of the arguments against it were pretty farfetched and ridiculous! It was claimed the electric lights attracted bugs, contributed to blindness, and had a bad effect on ladies' complexions!

And then this one on August 27, 1930, in an Oregon newspaper: "It is said that 25% of the telephones in the U.S. are now operated by dial system and that by 1940 the conversion will be complete. That is bad news, indeed. The change will throw a lot of people out of employment and add to the worries of phone users. To use a dial successfully, a man should be a graduate in electrical engineering and also know something about safe-cracking . . . Dial phones should not be permitted anywhere in towns under 500,000 people. in the larger cities people become accustomed to misery and a little more won't hurt them."

Anyhow, the world does move! But it's fun to glance back. After all, we're now having a huge national nostalgia binge – 200 years! So, it isn't out of order to indulge in a little wireless nostalgia along with the nation's. ■

Looking *West*

from page 151

meeting last week, I have been trying to find a nice way to put it, but for the life of me, I can't. In early December, the Two Meter Technical Committee of the SCRA will bring before the membership for ratification a proposed low megahertz band plan which places Southern California on the "even" channels, 10 kHz higher than the rest of the nation and with nineteen *potential* channel pairs. This whole situation places me between a stone and a hard spot for two reasons. First, as many of you are aware, I happen to hold elective office in the SCRA, and second (and more important), after a lot of soul-searching I find myself in opposition to the decision of the technical committee.

Now, before I get a lot of irate and nasty letters from amateurs involved in emergency service communication networks, let me say from the outset that my sympathies and desires lie directly with them. I am not convinced that there is any need whatever for repeaters between 144.5 and 145.5 megahertz – not at the expense of all other activity, including emergency services. Nor do I feel that the SCRA's Two Meter Technical Committee has made a technical error. In fact, based on existing spectral activity, they made on a purely technical basis a logical decision for this area. However, coordination councils such as the SCRA have now, by virtue of the report and order on repeater/remote deregulation, graduated into individual spectrum management organizations that are in essence part of a yet-to-be-established national council.

For coordination to work on a national basis, it means that individual local needs must be handled as "special cases" on a case-by-case basis and in relation to a nationally-accepted standard. For everyone to go his own way and begin coordination efforts in this new spectrum on a haphazard basis, without any thought given to what the neighboring area is doing, will have to lead to chaos. Can you imagine what it would be like if three adjoining areas each chose a different band plan? If area A ran even 20 kHz, area B ran odd 20 kHz, and area C went with 30 kHz and 15 kHz splits? The situation would not be conducive to friendly relationships between areas.

Yet, in Los Angeles County, Ventura County, Riverside County, and in fact statewide, the emergency services network plan, one accepted

Continued on page 155

Build This FM Signal Generator

- - peak that rig for mode B use!

J. C. Chapel W9HDA
2349 Wiggins Avenue
Springfield IL 62704

The OSCAR amateur satellites have caused a renewed interest in VHF and 10 meter preamplifiers. Most of these preamps provide enough gain and noise improvement to allow them to be used with older general coverage receivers and surplus commercial "boat anchors." In order to be effective, however, the receiver used behind any preamp or converter must be properly aligned. Many available receivers employ a 455 kHz i-f section, which must be properly adjusted for optimum receiver performance. However, many hams do not possess the signal generator necessary to adjust i-f stages, and unfortunately, many older kit type generators do not remain stable long enough to complete the tune-up.

This article describes an easy to build FM fixed frequency signal generator for 455 kHz. It uses two readily available ICs, a 8038 function generator, and a 741 op amp (see ads at the back of this magazine). A deviation control and output level control are provided, but the frequency is calibrated at just one frequency. It is possible to change the value to work with any i-f under 500 kHz by simply changing resistance and/or capacitor values. Because of the use of ICs, the other parts required are relatively small. Even the power supply is optional if a good regulated 6 volt positive/negative supply is available.

The construction of a 2 meter receiver prompted the designing of this generator. The need for an FM signal generator had existed for several years, but this receiver construction forced the issue. A search of electronic catalogs showed that there really are no lower priced FM generators available, even in kit form. Next the government surplus list was reviewed with similar results. There are surplus units, but prices are very high, cover much wider spectrum than required, and have many modes of modulation. At that point, the design specs were set up with cost and availability of parts prime considerations.

Circuit Description

Some information has been written on the 8038 function generator, but really not enough. It is a very useful device putting out sine, square, and triangular waveforms of a quarter volt or more in amplitude. Frequency range is from a small fraction of a Hz to about 1 MHz. Only a few external resistors and a capacitor are required to finalize the generator. Since an audio generator was already available at this shack, it was decided to not make use of the full frequency capability of the 8038. Triangular output is available on pin 3 and the square wave by making the 10k resistor on pin 9 a pot. Details of these other outputs can be found in manufacturer literature and a limited number of articles.

The frequency of the generator is determined by the RC combination of C1, the 120 pF capacitor (mylar or polystyrene recommended), and the series resistance of R3 (500 Ohms) and the 680 Ohm resistor. The variation of R3 shifts the generator frequency over a range of about one hundred thousand Hz. The 500 Ohm pot across pins 4 and 5 sets the duty cycle or symmetry of the waveshape.

The generator output is taken from a voltage divider connected to pin 2, the sine wave output. An output of over 100,000 uV is available at this point. The output level can be modified by changing the ratio of the 10k and 4.7k Ohm resistors.

FM modulation of the 8038 is obtained by applying a small varying signal between pins 7 and 8 and the positive voltage supply. This modulating voltage is obtained from a simple audio oscillator using just one IC, a mini-dip 741. Other op amps can be used, but experience has shown the 741 is one of the easiest to work with and the cost is very low.

This oscillator uses a notch network from the op amp output to the negative input. The result is a sine wave oscillation at about 1000 Hz. This signal is applied to the generator through the interstage transformer after being reduced in level by the resistor network.

The power supply is a simple bipolar (positive and negative) supply which is zener regulated and well filtered. The transformer can be two separate 12.6 volt units or a single 25.2 volt unit with a center tap. The four diodes could also be a rectifier bridge with at least 100

volt piv rating. This power supply could be eliminated if a good 6 volt bipolar supply is available. However, in this case, since it appears much use will be made of the generator and since the power supply is quite inexpensive, it was built into the final unit.

Construction Details

In the original unit, the audio oscillator, frequency generator, and power supply were each mounted on individual perforated boards. This was necessitated by several design changes made along the way. Packaging seems to work out best with the oscillator and generator on the same board, with the power supply separate.

Generally, construction is not critical, but the usual good construction practices should be followed. The entire device, including power supply, was mounted in a 3" x 4" x 5" minibox. The output level control, R2, the deviation level control, R1, and the output connector (BNC type) were mounted on the front panel. Since the output frequency is set at 455 kHz, this pot was mounted inside. The power cord was brought in the back, the transformers were mounted on the bottom and, finally, the boards were mounted on brackets to the top and sides of the case.

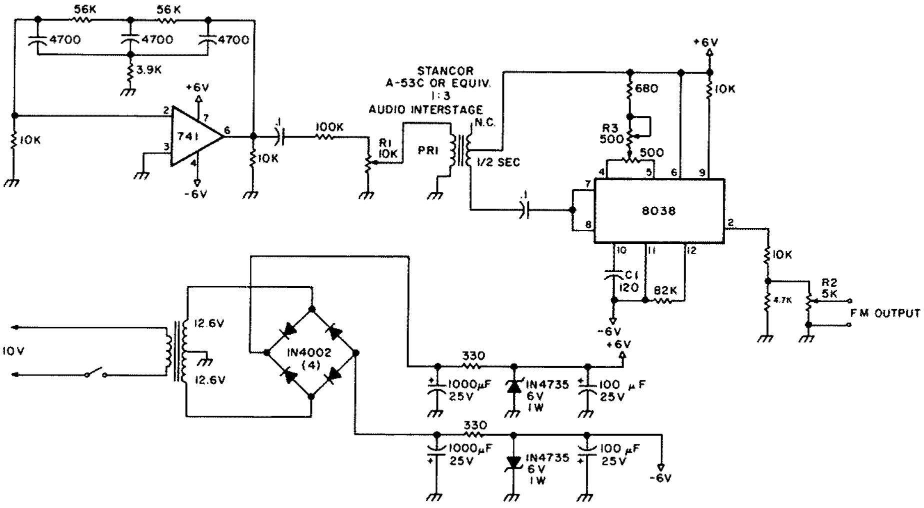

Fig. 1. One 25.2 V @ 300 mA CT or two 12.6 V @ 300 mA (primary in parallel, secondary in series). All fixed resistors ¼ Watt. Capacitors greater than 1 in pF, less than 1 in uF, unless otherwise marked.

Calibration

After checking all wiring several times, check it once more. This was learned through bitter experience and the purchase of a second 8038. Apply power to the generator and check to make sure that both plus and minus voltages are about 6 volts with correct polarity. With R1 set to the low end, look at pin 2 of the 8038 or the output of R2 with a scope. The correct setting for the 500 Ohm pot between pins 4 and 5 on the 8038 is about the midpoint. If the output is badly distorted or is missing, adjust that pot to obtain a clean looking sine wave.

The next step is to adjust the frequency with R3. The best method of adjustment is with a frequency counter or meter. While continuing to monitor the waveform on the scope, adjust R3 to the proper frequency, 455 kHz. There will be interaction between the 500 Ohm pot and R3. Continue to adjust back and forth until a good sine wave at 455 is obtained.

If a frequency counter or meter is not available, a receiver with known 455 kHz i-f could be used. By applying the generator output to an early stage (at low level) and measuring the output of the last amplifier stage, a peak in output would indicate the generator is set to the same frequency as the receiver i-f being used.

The only remaining item to check is the audio oscillator. Attach a scope or ac voltmeter across R1. There should be a good sine wave of several hundred millivolts present at about 1000 Hz (original model measured 924). The generator is now fully operational and the box can be closed up. To actually look at an FM signal, connect a scope to the output of the generator. With R2 at full output, slowly advance the deviation control, R1. The trace should spread or smear horizontally as the control is advanced. Notice that there is no increase in amplitude since this is strictly frequency modulation. The FM generator is now ready for use.

Conclusions

The unit has been used to align the i-f amp and quadrature detector of an FM receiver under test. The unit is stable and provides more than ample deviation required for amateur work. The unit is also being used in the development of a simple deviation meter, but that is another article for another time. ■

Looking West

from page 153

by the government of the State of California, is based upon "even numbers" rather than odd. Based upon the needs of the emergency communications services, the statements by representatives of this service that it would be a virtual impossibility for them to recoordinate activities in less than 5 years and at monumental expenditures in time and money, and the fact that such operations have existed for more than nine years on the basis just described, the SCRA's Two Meter Technical Committee opted to consider local needs over national interest. Therein you see the problem. Which is more important, local or national needs? To this there is obviously no clear-cut answer. Those involved in each will be obviously biased toward their special interest and, to make matters worse for me, I do not want to see any change at all in current spectrum activity. Yet, if this or any other area is to coordinate systems into that spectrum, then I feel it is paramount that everyone be totally unified and compatible.

There is no doubt whatever in my mind that emergency communication services such as RACES and ARES are important. If I did not feel this way, I would not have devoted seven years or so to involvement in both when I still resided in New York. I was a RACES member (W2NEM/W2VYR 219) and also did my turn as NCS for the Kings County AREC and CD Net for quite a while. I firmly believe that it's the people involved in such services who are the backbone of what our hobby/service is all about. However, and this is a big "however," I also feel that the national interest far outweighs any local need. Whatever the cost, operations such as these must be brought into line with what the majority of this nation's amateurs want — and at present this seems to mean the NARC band plan.

After about three weeks of contemplating this matter, I am of the opinion that if we must put repeaters down there, at least we should do so in the same way as everyone else. For heaven's sake, let's do what the rest of the nation is doing, and handle the needs of the emergency services people on a case-by-case basis until such time as they can effect revision of their operational plan and relocate into the framework of an *accepted national plan.* While I realize that the opinions expressed herein may not make me very popular with two

Continued on page 159

E. V. Olson WB7CTH
Box 67
NCS Japan
FPO Seattle WA 98762

Grow A Giant Junk Box!

-- tips and techniques

Every ham should have a junk box – the bigger the better. Not only is a junk box a handy and money-saving device for construction projects and repair jobs, it's educational as well. It will give you actual hands-on experience in testing and identifying various components and teach you much about which component substitutions will work in different circuits.

It's only fair to warn you, though, that junk boxing can become just as much a mania as any other aspect of ham radio. My junk box fills the better part of my shack and is overflowing into the backyard.

Of course, to enjoy the benefits of a junk box, one must have one. Now, how the heck do you go about getting one? Believe me, you don't without acquiring a reputation around the neighborhood as a weirdo of sorts. Passing the word among your neighbors and friends that you will be happy to take their electrical and electronic junk off their hands will soon result in goodies of all descriptions being made available. After the word gets around, stuff will start showing up from sources you'd never dreamed of. Also, an alert eye on roadside trash cans will yield many useful items. Far be it from the avid junk boxer to pass up an old TV just because there happen to be people around watching him pull it out of the trash can.

Old TV sets aren't the only source of goodies either. Transistor radios of all sizes, electrical appliances, and anything else that uses electricity, including toys, are fair game. If nothing else, they'll yield at least a battery holder or an ac line cord, plus some miscellaneous hardware.

After you've located your junk and hauled it home (it helps to own a station wagon or pickup truck), the next step is to plug it in and see if it works. Hold on now, we're building a junk box, what do we care if it works or not? Well, if it works or can be fixed easily, we fix it, clean it up, then sell it at a local flea market, swapfest, or any other place we can get hard cash for it. Then we have some of that hard-to-come-by green stuff to buy the parts we don't have in our junk box, some of that test equipment we need, or maybe a new piece of gear for the shack. Don't be bashful about doing this – you can always claim that you are simply conserving our natural resources by recycling useful items.

Don't waste too much time troubleshooting anything, though – just a simple once-over will do. The fuse and line cord can be checked with your meter. If you don't already have a meter, get one. Every ham needs at least one around the shack. Tubes can be checked at your local TV repair shop, drug store, supermarket, or any other place that has a tube tester available for public use. Even if you can't get the set working again, keep the good ones. Chances of using any of the weird tube types that show up in most TV sets in ham gear are small, but they will come in handy for fixing the next set you pick up.

If it doesn't work and can't be fixed easily, the next step in the case of a TV set is to defuse that bomb known as the picture tube. This isn't necessary, but it does wonders for your peace of mind when you get a little violent trying to get some stubborn component out of the cabinet. I evacuate the tube by laying the set face down outside and wrapping the entire tube, except for the very tip of the neck, in several layers of an old blanket or rug. Then I put on a long sleeved, heavy shirt or jacket, leather gloves, and safety glasses. Now, with a pair of pliers, I carefully break off the glass tip which protrudes from the base of the tube between the tube's pins. When it breaks off, you'll be rewarded by an inrush of air, and the tube is then safe for disposal. A few words of caution here – always wear the heavy clothing and safety glasses, leave only the minimum amount of tube exposed, and, if there's any question in your mind about how to do it, don't. I've never had one implode on me, so the process is quite safe if proper precautions are taken, but don't get overconfident and careless. Treat the tube like you would high voltage – with respect.

Now that everything is safe, clean up the equipment as best you can and remove the chassis, speakers, and anything else you spot from the cabinet. After you've removed the chassis, clean it again. Then you can go after the goodies. I usually cut out the components with long leads, remove the circuit boards from the chassis, and then go after what's left.

Don't throw anything away! Save all the nuts, bolts, screws, washers, etc. Don't forget the yoke from the picture tube and the flyback transformer. They'll provide many feet of wire for winding transformers, coils, and numerous other things.

Guess what comes next? Yep, we clean it all again. It's unreal how much dust, dirt, and grease get into electronic equipment. While you're cleaning the parts, give each one a good visual inspection, and throw out any that look doubtful. After you've cleaned and inspected each component, sort them by type – resistors in one box, capacitors in another, etc. It's a good idea to put anything you don't recognize in a separate box, so you can go through it later and see if you can identify anything. It's unreal how many components that you didn't previously recognize have acquired a name in a month or two.

Now that everything's segregated by type, you can sort them out by value. Resistors and capacitors are usually pretty easy because they are either color coded or labeled, but coils are a different story. If you own a dip meter or inductance bridge, you're in business and can measure them. If not, you can borrow or buy a dipper to check them with. (Remember the money we got from selling those goodies at the flea market?) Either way, I recommend buying a dip meter at the earliest opportunity. One is inexpensive in kit form and, next to a meter, is about the handiest piece of equipment in the shack. A book or two could be written on its uses.

Semiconductors are also usually labeled. If they're not, I throw them away, unless I happen to feel like spending an hour or two trying to figure one out. The ones I can identify I store in small boxes filed in alphanumeric order.

Chances of a project calling for the particular device you happen to have are small, but with a little ham ingenuity, you can usually find one that will work. What I do is keep a three by five card on each device with its number, type, power rating, and any other information I can locate listed on it. There are several sources for this information, but my favorite ones are Motorola's *Semiconductor Cross-Reference Guide and Catalog* and RCA's *SK Replacement Guide*. Both are available from the manufacturers or their dealers for about a buck each (and are worth every penny of it). Once you have your copy of these, all you have to do is look up your device and find the HEP or SK replacement device for it. Then turn to the listing in front of the book, obtain the specs on the HEP or SK device, and enter these on your card. These specs will not be exact for your particular device, but are close enough for most purposes.

As an example, let's look up a 2N652 transistor using the HEP cross-reference. First we look up 2N652 in the cross-reference portion of the book and find that a HEP 633 is the replacement for it. Now we turn to the front and check the description and packaging index portion for the HEP 633 and find that it is a germanium, PNP, general purpose audio amplifier. This is already quite a help, but we're not done yet. Now that we know the device's general type, we can turn to the catalog section and look in the low power germanium transistor portion and locate our HEP 633 again. We now learn the device's BV_{CEO}, BV_{CES}, I_C, P_T, T_j, f_t, h_{FE}, and I_{CBO}. Not too bad for a buck! There are manuals that give this information directly for each device, but you don't get them for a dollar a copy. The one I have was about twenty bucks, as I recall, and it doesn't do much better than the cheapies mentioned above.

Now that you have the above specs in your card file, when a project calls for a semiconductor that you don't have, go to your cross-reference guide and get its specs, using the procedure just outlined. Look through your card file and pull the card on each device with similar or better specs, and then try the one that matches what you need most closely. It works almost every time and lets you save your money for things you don't have in your junk box. Don't get the idea that I don't use a substitution guide, because I do. Quite often, though, the above method will find something that will work, when the substitution guide is of no help.

After you've gotten a good start on your junk box, don't be afraid to use it. If a project calls for something you don't have, but you think you have something that may work, try it. If it doesn't work, try to figure out why. Even if you burn up a part or two, it didn't cost anything except a little time and effort. If you figure out why it failed, you'll have learned a little about circuitry in a manner that insures a high retention factor.

Once again, don't throw anything away. Even transformers with unusual voltages can be rewound to provide almost any voltage you desire. This seems to be sort of a lost art, but it's simple, and there is at least one recent article on it.* More than once I've thrown something away because I either didn't know what it was or didn't think I would ever need it, and a year or so later I was very sorry indeed. Invariably the part was worth at least ten bucks or was some rare device that I now need and can't find anywhere at any price. ■

*McCoy, "The Ugly Duckling," *QST*, Nov., 1976.

Looking *West*

from page 155

groups, namely the emergency services people and the SCRA Two Meter Technical Committee, if given a choice, I elect to back the needs of the overall amateur community nationally over any one individual or group. It is my sincere feeling that any disunity at this time can only hurt us all. This time, the SCRA is wrong.

There are two points upon which I must commend the SCRA's technical people. Among their *recommendations* are that the 200 kHz between 144.9 and 145.1 be "recommended" (not falsely promised with no way to back up such a promise) for non-FM, non-channelized communication, and that an additional 100 kHz be withheld for at least 12 months, thereby giving SSB, CW, and AM additional spectrum even though this means fewer FM repeaters. Perhaps translators or SSB repeating stations will eventually occupy this spectrum, but for at least the next year, 144.9 through 145.2 is off limits to relay activity if the general membership goes along with this proposal. Unlike the decision to move up 10 kHz, these two recommendations can easily be initiated under the outlined structure of the NARC plan without drastic modification to it. This positive step at least gives non-relay operations now there an even break to some degree. Also, a formal commitment has been made to Baja for two clear channels in that spectrum, as well as a few others on a shared basis with US activity.

THE BEST WISHES TO W6KW CORNER!

As many of you have probably heard by this time, on September 10, 1977, Southwestern Division Director John Griggs W6KW suffered a fairly severe stroke and has been hospitalized since that date. To a great many of us out here, John is far more than an ARRL Director. He is a person whom we love and respect. John Griggs is my friend and I am very proud to be considered one of his. I could spend pages upon pages telling you about John and his many accomplishments that literally span a lifetime, but suffice it to say that John, to those of us who live in Southern California, is Mr. Amateur Radio.

"Looking West" joins with all of John's other friends both inside and outside California in wishing him a fast recovery. We need the John Griggs's of this world.

Is It Glass . . . Or Iron?

-- a look at Metglas®

Alexander MacLean WA2SUT/NNN0ZVB
18 Indian Spring Trail
Denville NJ 07834

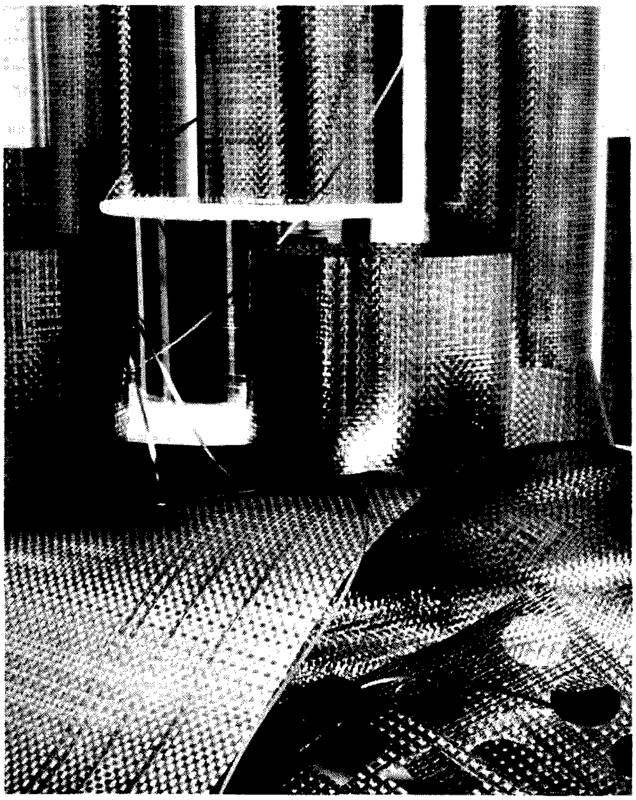

Metshield fabric, Allied Chemical Corporation's new magnetic shielding product, derived from Metglas amorphous metal alloy ribbon, can be cut or die-stamped into a variety of shapes. Presently available in 7-inch widths, Metshield fabric can be fabricated without loss of its magnetic shielding properties.

Allied Chemical Corporation has released a new metal alloy called Metglas®. While the process yields a number of specialized metals, the first commercial application for the process is a metal fabric, Metshield™, intended for magnetic shielding in electronic applications.

The name Metglas is derived from its manufacturing process, which results in some most unmetallic properties. The basic material of glass is sand, a crystal. Glass, however, is not a crystal. It is sand in a noncrystalline state. In chemistry, it's called an amorphous state.

When metal is cooled from its molten state, it crystalizes and becomes the metal substance that is its familiar state. This new metal is not allowed to crystalize, however. It solidifies in an amorphous, or uncrystalized, state – hence its similarity to glass.

This process gives the metal physical properties that it would not have in its usual state. Add to this the ability to take advantage of mixing the properties of several metals, alloying, and you get a whole new range of materials to work with.

The trick is how they get it to solidify without crystalizing. As it is made, the metal is cooled at an extremely high rate. It solidifies, but it does not have a chance to crystalize.

Woven into a fabric, it becomes Metshield, a competitor to the high nickle-iron materials, such as "Mu" metal. But there are several specific areas where the material has far different mechanical properties.

Mu metal, and the others like it, are sheet metal. They have to be worked, with the usual mechanical problems of working and shaping. One problem with them is that as they are worked, it affects their shielding capability. After shape fabrication, the metal has to receive a high temperature treatment to restore its shielding ability.

Here's where Metshield has an edge. While it has to be carefully handled to avoid cuts from sharp edges, it is far easier to work. It can be cut with shears and, being flexible, is easily formed into complex shapes. Joining edges or sections together is a snap. The material can be clamped, or even glued, together. You just have to make sure that there is sufficient overlap to prevent leakage.

Allied says that it may be possible to solder the material with an extremely low temperature solder, but this is not recommended. Heat will change the physical properties of the material, which might degrade the performance.

The material is reusable. Unless it has been cut into an unusable shape, it can be removed and reformed into a new shape.

Unlike the solid metals, this does not affect its performance. This makes it a strong contender for research and development uses, where a number of different bench configurations are to be tried and evaluated. It is also intended for post production uses, where it would be too late to incorporate a solid metal shield, but a field change, production change,

or repair is needed in equipment.

There appear only a few areas where this might find application in the usual ham equipment, although, with exotic areas becoming more common, there may be wider application possibilities than are obvious.

In general, you would use it where you would use a Mu metal shield. This is commonly used with a CRT. Most scopes shield the CRT to prevent stray field pickup. This suggests it might also be useful for TVTs, RTTY converters, or other devices where you might want to shield the CRT. It is also recommended for photomultiplier, vidicon, and image tubes.

The important thing to keep in mind is that this is a magnetic shield. Most amateur shielding is for rf. The rf shielding capabilities of Metshield have yet to be explored.

While it was priced to compete with the solid metals, it will still come as a shock to most ham budgets, even though the price has dropped since it was first introduced. It is available in small quantities for experimental use, but at a premium price. So far it is being marketed only in seven-inch widths.

The preliminary prices, quantities, and delivery times break down as follows: 1 foot costs $25, 2-9 feet cost $18/ft. (both one week), 10-24 feet cost $14/ft. (3 weeks), 25-99 feet cost $10/ft., 100 feet+ cost $7/ft. (special order). As you can see, that is quite a hunk of change for a small hunk of Metshield. According to Allied, this compares favorably with the prices for the equivalent use of the solid metal.

For the amateur used to the surplus prices for metal scope shields, it is going to look steep. However, there aren't that many scope shields in the ads these days. But it still looks like a poor bet for most ham applications, because the price for a shield would be a major part of the overall cost of the project at that level. A ham would have to really want or need the particular properties that Metshield had to justify the cost in a ham project.

Research and development are another matter, though. As a commercial proposition, it would appear that any outfit working in an area using magnetic shielding should check out this material. It could save time, money, and inconvenience for some projects.

The same process can be used to fabricate materials with other properties. There were other possible uses for their new materials hinted at in Allied's literature. While it does not have the structural rigidity of sheet metal, the ribbon of metal itself has a very high tensile strength, an attribute that could be useful in applications of some of the other Metglas alloys.

Greg Sellers, applications physicist, demonstrates the ease with which Metshield magnetic shielding fabric can be cut. Metshield fabric is the first commercial product made from Allied Chemical Corporation's Metglas amorphous metal alloys, a new kind of engineering material.

As this whole field of metal alloys is a new and experimental area, Allied is working to find new uses and markets for the various alloys. A folder of technical data, giving a far more complex analysis of the chemistry and physics of the new alloys, is available. A note on your company letterhead should bring the information. I would think that any amateur who was prepared to pay the price for the material would have no trouble getting the literature either. I just called and asked.

For up-to-date technical, pricing, and delivery information, contact: Allied Chemical — Metglas Products, Attn: John P. Dismukes, Business Manager, 7 Vreeland Road, Florham Park NJ 07932, (201) 455-4031. ■

EDITORIAL BY WAYNE GREEN

from page 6

regular 10m gang.

Even the 40-channel sets go only as far as 29.405, which is just high enough to be able to listen in on OSCAR 7, on the low end of its channel. These CB sets seem ideally designed to fit into a gap in amateur equipment . . . I think they may be popular.

Let's set up channel 1, 28.965 MHz, as the official listening channel, and move to an unoccupied channel once contact has been made. If we are careful to always move up, we won't have to have a separate emergency channel and won't fall into the trap CBers did by not establishing an official calling channel. By not using the emergency channel for calling, there are often no ears listening.

The shortage of 10m mobile amplifiers is indeed disappointing. If we are going to get heavily into 10m mobile operation, we are going to have a big need for amplifiers. Those little 4-Watt signals don't go very far, and a pair of shoes to crank out 50 Watts would make a big difference. Sure, we can go the route of buying those damned CB linears, but almost every one of them is a disgrace. They have more spurious output than you can live with. The fact is that we have a growing need for some good ten meter linear amplifiers for legitimate ham use. Perhaps some readers can come up with some good clean amplifier

Continued on page 165

Ed Landefeld W8DCC
1135 Durham Circle
Massillon OH 44646

Build A Simple Capacitance Meter

-- a useful weekend project

A time-honored and very practical supplier of components for the latest ham project continues to be the junk box. A well-stocked junk box not only reduces the cash outlay of a project, but also serves as a source of comfort and inspiration to the happy owner.

A major factor limiting the utility of these readily available goodies is the difficulty of identifying them properly. The number of articles describing transistor checkers, IC probes, and programs for identifying and checking ICs points not only to the popularity of the junk box source of supply, but also to the difficulty mentioned above.

Capacitors are a part of this problem. It seems that the original equipment manufacturers, the source of many of these components, delight in concealing the true value with an esoteric part number. And the military is even worse.

Cheer up! All is not lost. Described herein is an unbelievably uncomplicated and cheap device that will go far toward blowing the cover of all those mysterious micas, discs, and ceramics smirking at you from your hoard.

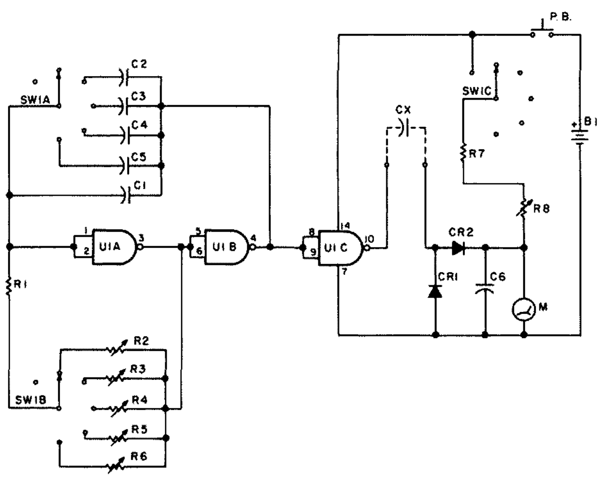

Fig. 1.

The Circuit

As advertised above, this little device is ridiculously simple and inexpensive. It consists of an oscillator and a rectifier, with a meter to indicate the value of the rectified current. Let's refer to Fig. 1 and be a bit more specific. U1A and U1B are two NAND gates of a CMOS quad two-input NAND gate. You can get one for 29¢ if you don't have one. These two gates are cascaded, biased in the linear mode by the resistor network, and caused to oscillate by capacitive feedback around the two gates. The output is a square wave which is buffered by the third gate U1C to insure an output of constant amplitude. We apply the output of the buffer to the diode rectifier through our unknown capacitor. If the unknown capacitor is small (has high reactance) in comparison with the frequency of the oscillator, it will pass a small pulse on each cycle which will be rectified by the diodes. The meter will read the sum, or integral, of these pulses. The larger the value of the capacitor, the larger the pulses, the greater the sum and the higher the meter reading. Simple, isn't it?

This is a basic counter circuit. With a given value of capacitor, if the oscillator frequency is increased, there will be more pulses per second, thus a higher integrated meter reading. This forms the basis for a very simple and useful counter which is linear over quite a few octaves. We are simply turning the circuit around to measure capacity instead of frequency.

Circuit Details

The circuit was set up to use a 1 mA meter movement. The values shown in Table 1 list the oscillator frequency, capacitor and resistor values for a 1 mA meter movement. There are five ranges arranged as decades. The lowest range is 0-100 pF, the next 0-1000 pF, etc. Each range is linear, so it is quite possible to read a 5 pF capacitor on the lowest range. The highest range then reads full scale on a 1 uF capacitor.

It would be inadvisable to use a meter with less sensitivity than 1 mA if the 0-100 pF range is desired. Note that with the 1 mA meter, the oscillator is running at a frequency slightly greater than 1 MHz. This is approaching the

W. J. Hosking W7JSW
8626 E. Clarendon
Scottsdale AZ 85251

Simple Sequential Decoder

-- for uncomplicated repeaters

A local group recently came to me with a request for a simple controller for a single repeater. Their requirements called for a three digit control code, but the first two digits of the on code and the off code could be the same, such as 523 on, 524 off.

Since I would not need the entire 12 digits decoded, my previously described (*73*, April, 1976) decoder boards would fill the bill for the required digit decoding. Each one of the boards will decode two dual-tone digits in the same row or column and provide a logic output. This particular application requires four digits, or two of the decoder modules. By using these boards, I only had to design the function decoder circuit.

The group that had requested the decoder had also requested that I use TTL, so the design herein is standard TTL. The design would lend itself to use of CMOS with very little change in circuitry.

This article will not go into the digit decoders since 567 type decoders have been adequately covered in previous issues of this magazine by me and many others.

Circuit

The circuit is shown in Fig. 1. The digit decoders are not shown, but TTL compatible logic inputs are assumed, which go to a high state when a digit is decoded.

The four 1N914 diodes form an OR gate which triggers U3A, one half of a 74123 monostable, thus creating a clock pulse with each digit received. The 2.2 uF capacitor on the input of U3A is to eliminate the bounce or ringing on the digit decoder inputs.

The clock output is taken from the Q output of U3A, while the $\bar{Q}$ output is used to trigger U5, a 555 timer. The 555 timer is set for a period of about 8 seconds. At the end of that period, the timer triggers U3B, which in turn resets all of the logic except for the output stage. Going back to the input, coincidence of the logic high at D1 and the clock pulse cause the output of U1A to go high, enabling gate U4A. Now, if digit D2 is received, a high will appear on the D input of U1B and a clock pulse will set the output of U1B high. Note that if either D3 or D4 had been received instead, the resulting clock pulse would have had no effect on U1B and would have reset U1A to its low state. The high on the output of U1B enables gates U4C and U4D, making them ready for the third digit. If the third digit was D3, then U4D would have turned U2A on, while if the third digit had been D4, then U4C would have turned U2A off.

Even though both stages of U1 will wind up reset at the end of a three digit sequence, I provided an automatic reset timer mentioned earlier. I found in an earlier system, where the automatic reset had not been included, that the system would eventually turn itself on or off from noise or power glitches interpreted as digits. The timer consists of the 555 and the second half of monostable U3. At the end of the timing period, the 555 triggers U3B, which resets the flip-flop, U1A, B.

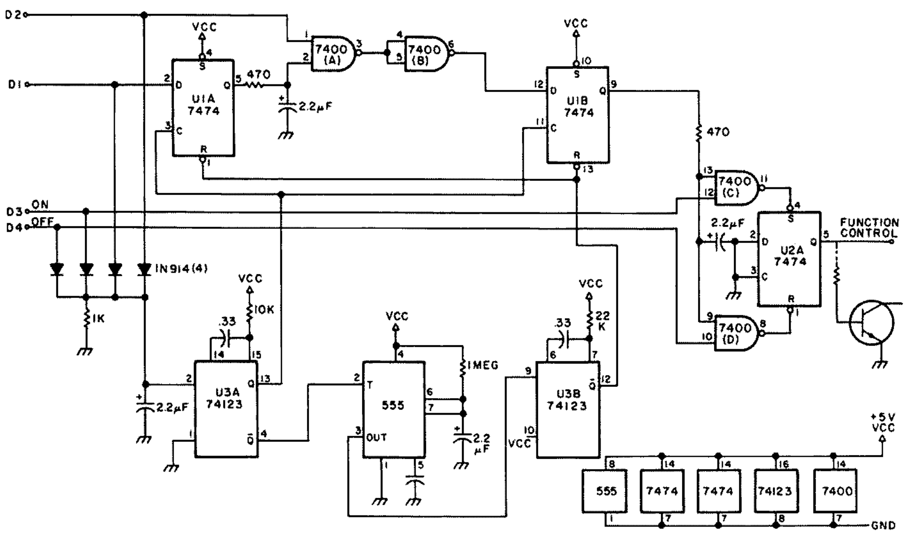

Fig. 1. Schematic diagram of the function decoder. Inputs D1-D4 are the digit decoder logic inputs which should go high when a digit is decoded. A 7805 regulator is not shown but was used. Transistor Q1 is meant to be representative of a typical output control circuit.

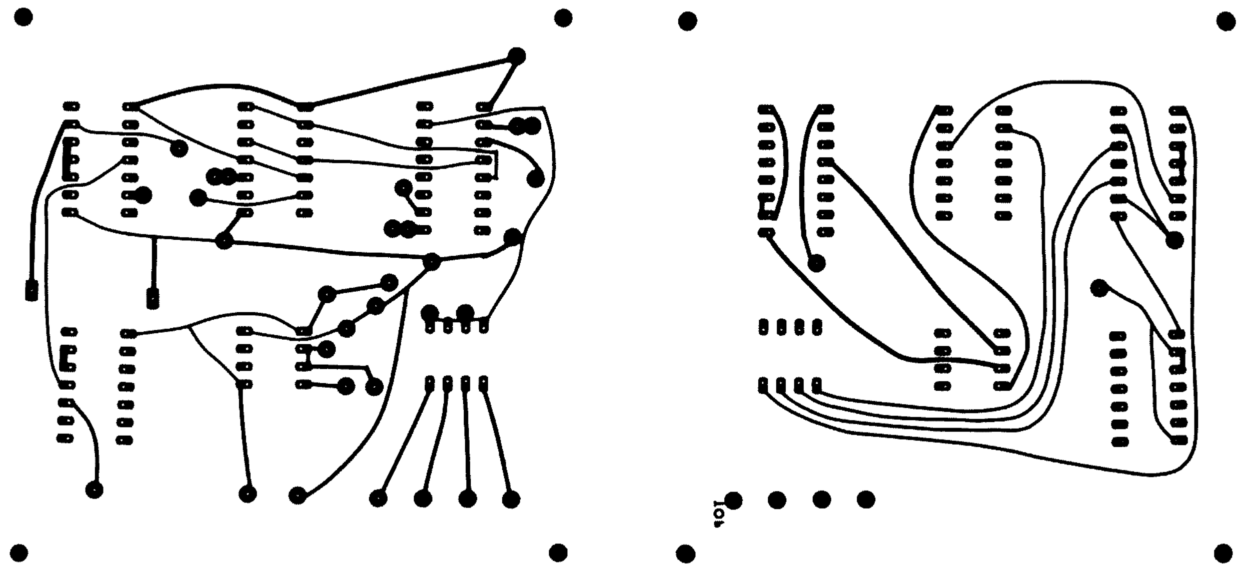

Fig. 2. Printed circuit board for the function decoder shown full size.

Although it is not shown on the diagram, I used a 7805 type voltage regulator to run the system from a 12 volt line. The digit decoder modules have built-in 5 volt regulators.

Conclusion

The function decoder has performed very well so far. If 567 decoders are used, you must be careful with the audio input level to prevent false decoding.

I made a printed circuit board for the function decoder and the artwork is shown in Fig. 2. A parts layout is shown in Fig. 3 and a parts list is included at the end of the article. Printed circuit boards and assembled units are available from Contact Electronic Research and Development, 35 W. Fairmont, Tempe AZ 85281. Write for pricing and availability. ■

Parts List

R1 – 1k
R2, 5 – 470
R3 – 10k
R4 – 1 meg
R6 – 22k
All ¼ W 10%

C1, 2, 4, 5 – 2.2 uF/10 V
C3, 6 – .33 uF/50 V

U1, 2 – 7474
U3 – 74123
U4 – 7400
U5 – 555

Diodes – 1N914 or 1N4148
PCB – Contact Electronic Research and Development, 35 W. Fairmont Dr., Tempe AZ 85281

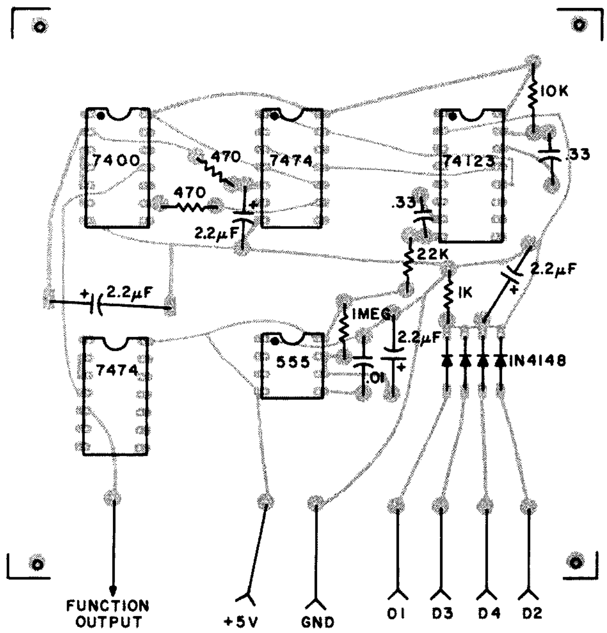

Fig. 3. Parts placement for the printed circuit board of Fig. 2.

EDITORIAL BY WAYNE GREEN

from page 165

serious a problem as it might seem at first thought. With the exception of Canadian stations, propagation manages to isolate the US from the rest of the world for many hours of the day. I've operated from countries all around the world, almost always using the US phone band, and I've seldom had any problem working anything I wanted to. During those few hours when the US was coming through, I had my choice of US or other DX . . . the rest of the time it was just other DX. It just wasn't a problem above 14.2 . . . so why should it be one below?

While I don't want to aggravate my many Canadian friends, I just wonder why they rate a special phone band. They seem to be running as much power as we are and be able to work out fine in the US phone band when they try. It doesn't seem reasonable to preserve this 100 kHz band of the most valued shortwave ham frequencies for one country . . . and that is about what it amounts to.

If any Canadian amateurs have some good reasons for this special treatment, I'll be interested in hearing from them . . . and will be glad to pass along their information. Otherwise, I think it is high time US amateurs entered a petition for the FCC to extend the phone band down to 14.1 MHz.

SIXTEEN VS. EIGHT

More and more 16-bit microcomputers are being brought out, and not a few readers are asking about them. Obviously, a 16-bit machine can do a lot more work than an 8-bit computer . . . and faster. Heath is giving us the choice of either 8-bit (H8) or 16-bit with their H11 (why not H16?), so the question of which is better may be an immediate one for a lot of incipient computer hobbyists.

First, before getting into any details on the relative merits of 16 vs. 8 bits, it might be worthwhile to explain just what the difference is between the two.

Most of the microcomputers are

Continued on page 169

73 Magazine *Staff*

PC Techniques

-- how to etch foil pads

A good calculated guess is that many amateurs do not enjoy the fun of constructing their own circuits or duplicating circuits found in many articles because they are inhibited by the need to etch printed circuit boards. The etching of a board is not necessary for the construction of a single copy of most circuits. Indeed, there are circuit construction techniques which allow the duplication of a circuit presented in etched circuit format by an individual builder without etching and with equal or better circuit performance than is obtained with an etched board! One of these techniques is the so-called isolated pad technique of utilizing single side, copperclad PC boards. The technique is not new, having been introduced several years ago. But most amateurs are not aware of its usefulness and simplicity. This article presents a simple, practical guide to the utilization of the technique, so that even a young Novice operating on a limited budget or an apartment dweller without a machine shop available can have some fun with simple circuits laid out for PC board construction or with home brew circuits.

The isolated pad technique of circuit construction is very flexible, in that it allows the "freelance" construction of a circuit from a schematic or the duplication of a simple etched PC board layout.

The basic idea of the isolated pad is illustrated in Fig. 1. A single side copperclad PC board is used, in which a hole (1 mm) is drilled where a connection point is to be made. See Fig. 1(a). Then, a special tool is used to remove the copper from the board around the hole, except for a "pad" of copper left immediately next to the hole. See Fig. 1(b). This "isolated pad" can then be used to wire in a component mounted on the non-foil side of the board, and several isolated pads can be drilled in a cluster to interconnect components. Components which have one terminal grounded have the applicable terminal soldered to the copper foil side of the board after passing through a drilled hole where an isolated pad is not made. The technique leaves a far larger copper ground plane on a board than etching does. VHF and UHF circuits can easily be home-constructed using the technique, which is not the case if one tries to duplicate such circuits using simple point-to-point wiring on plain perforated board stock.

When constructing a circuit from a schematic, the circuit can pretty well be laid

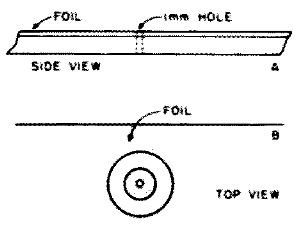

Fig. 1. A 1 mm hole is drilled in the board where a component lead is to be placed (a), and then the isolated pad is formed with a special tool (b).

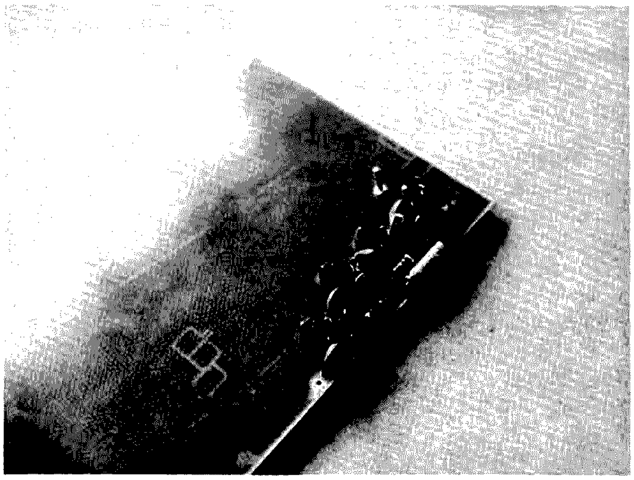

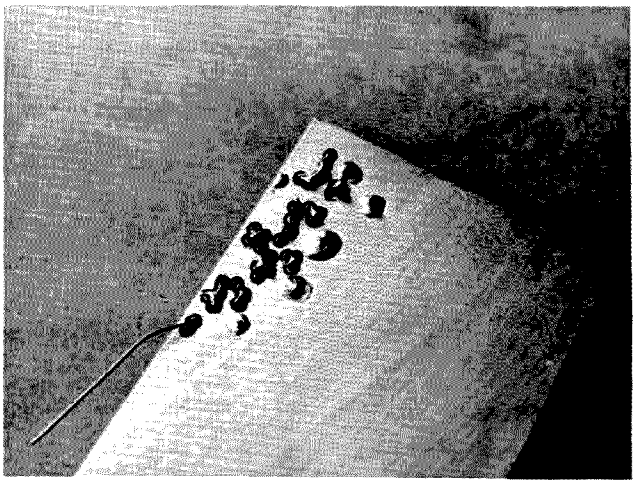

Fig. 2. The top (non-foil) side of a board containing a three stage amplifier, and the bottom (foil) side showing the isolated pad interconnection points.

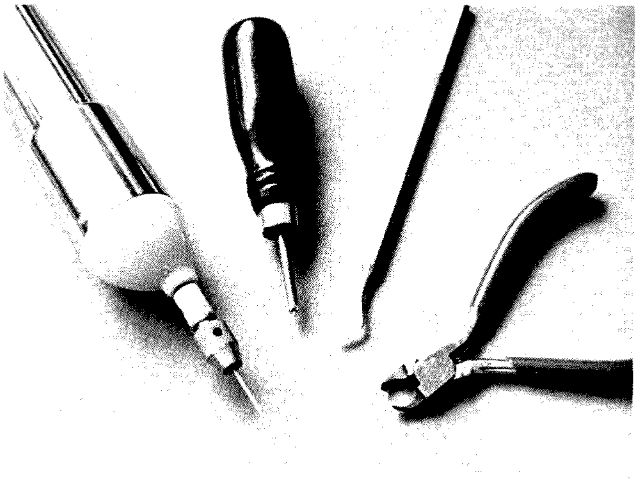

Fig. 3. A few special tools facilitate isolated pad wiring.

out by following the basic layout of the components as shown on the schematic. For instance, Fig. 2 shows both sides of a board which contains a 3 stage amplifier. The components are grouped around the transistor sockets much as they would be shown on the schematic. For more complicated circuits, one does, of course, have to do a bit more preplanning to avoid drilling excess holes and having jumper wires all over the board.

Simple etched PC templates can be duplicated by placing the template over the board and drilling holes at all the locations designated for component mounting. Then only those points which are not grounded are provided with an isolated pad and jumpers are used to interconnect points. In most circuits, one end of most components is grounded, so the work involved is not too great. The technique will not work, of course, to duplicate a PC layout with 10 ICs and interconnection lines running around like the L.A. freeway system.

A few simple tools and techniques make usage of the isolated pad technique simple and versatile. The main tools needed are shown in Fig. 3. A hobbyist-type battery-operated drill with a 1 mm bit is used to drill the board at the desired locations. If one lets the drill do the work and doesn't try to "push" it through the board, this simple drill will very readily work with any PC board. The isolated pad is cut with a commercial tool (Vector Co. type P138C or P138). These tools come in a version with a handle, as shown (P138C), or as a drill-type insert (P138) to be used with any small drill. There are tools available to cut various size pads, but the P138 pad size of .125" is just right for most work. Most large electronics supply houses stock Vector parts, or one can write to Vector Electronics, 12460 Gladstone Ave., Sylmar CA 91342, for distributor information.

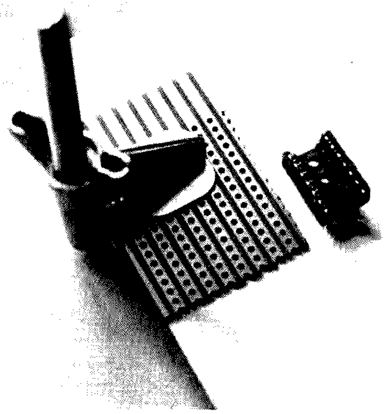

Fig. 4. A "mask" can be used as a drill guide for any special pattern. In this case, a piece of perforated board stock is used as a guide to drill holes for mounting an IC socket.

The next tool in Fig. 3 is a small dental scraping tool. It is very useful for cutting away the bits of copper that might remain if two pads are cut with some overlap so a interconnection point can be made. An X-Acto-type tool with the proper blade can also be used, but the dental tool is superior. The latter are not available from electronic distributors, although your dentist might part with a used one after you pay your next dental bill. The last tool is a 45° flush cutter. It is much more useful than the usual diagonal cutter for trimming leads close to the board.

ICs and transistors in any type of case can be mounted on the board either directly or by using sockets. To drill the necessary hole pattern for the socket or device pins, a "mask" is used, as shown in Fig. 4. The mask is just a piece of perforated board stock which has the correct hole spacing for IC pins. A mask can be made for the round-type cases (T0-99, etc.) by removing the pin holders from a suitable socket and then using the socket as a mask.

The isolated pad wiring technique has its limitations, but it does allow a builder with a minimum of space and resources to build circuits in a manner that is electrically advantageous and as neat and compact as any small etched PC layout. ■

EDITORIAL BY WAYNE GREEN

from page 167

8-bit systems. They are designed to work with 8-bit microprocessor chips such as the 8080A, the Z-80, the 6800, and the 6500-series. Since it takes 16 bits to give the address of any memory location, the 8-bit systems have to take two cycles to handle each memory address. The address is split into a high order and low order address. Then it takes a third cycle to handle the 8-bit character which is in that address.

Why 16 bits for the address? If you get your fingers out and do some binary figuring, you'll see that it takes that many binary numbers to count to 65,536 . . .the number of memory locations most microprocessor chips are equipped to handle.

And why was 65,536 (also known as 64K) picked as an optimum memory for microcomputers? Given the choice of 256 bytes for one machine cycle, 64 kilobytes for two machine cycles, or 16 megabytes for three machine cycles, the two-cycle was the most practical. Most microcomputer programs can be handled within this amount of memory, so it is the most efficient.

A good BASIC interpreter requires about 16K. Add another 12K for a fair-sized program and you still have plenty of memory available for working. If you are processing a mailing list where each name and address requires 80 bytes of memory, you'll have room to handle two to three hundred names at a time for sorting, printing, etc.

A 16-bit system can handle the entire memory address in one machine cycle, and thus is a lot faster in operation than an 8-bit machine. On small jobs, this may not be a factor of any significance . . . but if you are interested in sorting out a 10,000-name list, then the time for handling each operation becomes interesting. Obviously, there has to be a reason that firms buy $100,000 computer systems instead of $2,000 systems, and speed is a big factor. The more expensive systems are also capable of

Continued on page 171

David J. Brown W9CGI
RR 5, Box 39
Noblesville IN 46060

Space Age Junque III

-- more mods for the BC-348

If you have been following parts I and II of this series of articles covering the modification of the BC-348 and like receivers, you will already know my end desire is to allow those of you lacking in funds (most of us?), or not having the corner radio store access of many U.S. hams, to build (or really rebuild) a receiver that will compete with the best on the market today. I assure you it is possible, because you can devote the necessary care and time to the receiver that mass production just won't allow. The purpose of this part III is to add on two relatively simple circuits the BC-348 does not possess when purchased. Since they are somewhat dependent, I have included them both in one article and one circuit board. This circuit board and the assurance the circuit works in the BC-348 is really all I am providing in some parts of this series (this one), as the circuits are someone else's. I am only bringing together from many sources and, where possible, providing the how-to, a circuit board, the wire-in information, and help where possible by your follow-up mail. May I credit at this time the origin for this time's circuits. The audio-derived AVC is by EI4R in an earlier *73* issue, April, 1966. The S-meter is the best combination to date, and is by R. L. Winklepleck from *Popular Electronics*, February, 1963. The S-meter is really a simple VTVM as pointed out by the author.

Discussing the circuits for a minute, the audio-derived AVC is a necessity if you hope to be serious about SSB type reception. As we go along and add crystal-controlled type BFO (LFO) to the BC-348s we are working on, something obviously must be done to provide AVC during SSB reception. It is tough

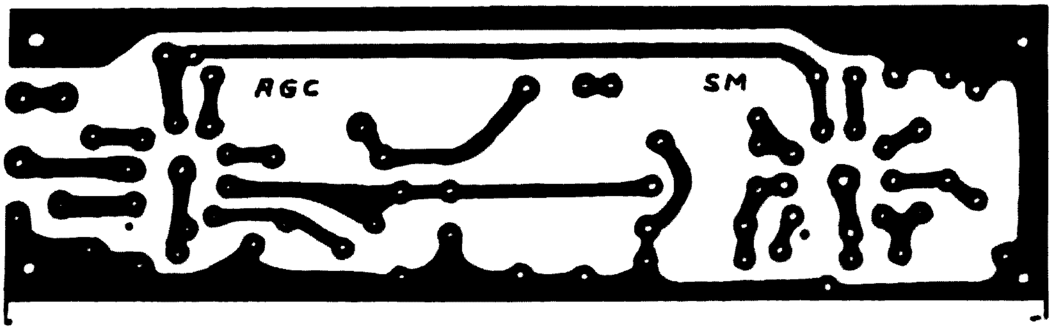

Fig. 1. PC board.

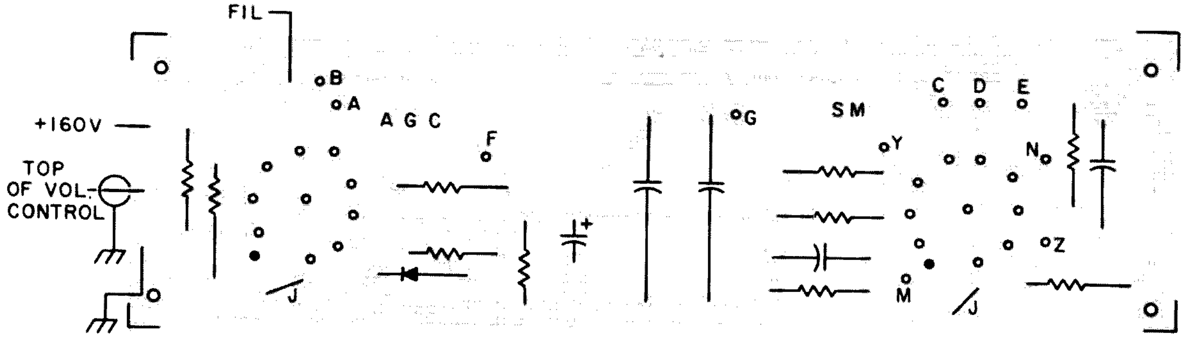

Fig. 2. Component layout (foil side view). J used on 6.3 V models; also jumper A to B, C to D. 28 V models: Omit (2) J; Fil to A; jumper D to E.

to get carrier-derived AVC out of a system that has no (little) carrier of its own upon reception. One half of the enclosed circuit board takes care of that. Since the S-meter works off of any AVC involved, I went ahead and put it on the same board. As usual in this series, some of the parts are left off the board for either size, convenience, or, as in some cases here, the desire to locate them where *you* want them (i.e., S-meter – panel, separate box, with the speaker enclosure, etc.).

The AVC circuit is really quite simple to build now that there is a circuit board, and just as simple to get running. The input is taken from the top (hot) end of the volume control (full volume at all times, regardless of volume control setting), and feeds the first tube's grid. The volume control forms the grid resistor, so do not ac couple at this point. The second half of the 12AU7 triode (dual) is used to allow separate time constants to be applied to the AVC line than are applied to the S-meter circuit. The switch SI allows you to have more than one AVC constant for the receiver itself. It can just as easily be multi-position rotary, and many time constant choices be made available. On the other hand, the long constant presented in the second half grid circuit allows steady enough readings for the S-meter. The author stated "any crystal diode" for use in the cathode, and we have found the 1N60 specified in the schematic to work quite well for our purposes. That really sums up the AVC circuit, except how to connect it into the BC-348. Begin by any connection to pin 5 of V7 (6B8) going to either the 1.5 megohm resistor to ground (52) or the 220k resistor (53). Connect the AVC line into this point. The easiest and possibly most versatile way of doing this is to run the resistor junction point to the center tap of a DPDT switch (allowing for other use for second half of switch later), and wire pin 5 of V7 to one switch direction, and the new circuit output to the other direction. The switch can be marked AVC audio/carrier or something of that nature.

Continuing on with the S-meter circuit, it is even easier. I made the input connection for you on the board. All you need to do is add the external plate load resistors in the form of a 20k pot with the ends going to M and N and the center tap going to +160 volts. Also, you must add the meter and its series limiting resistor between Y and Z. Be sure to get the meter polarity right. The adjustment of this part of the circuit is quite easy. Warm up both the receiver and the new circuit (tubes have *one* disadvantage!), then remove the antenna from the input. Adjust the balance pot for a zero reading on the meter.

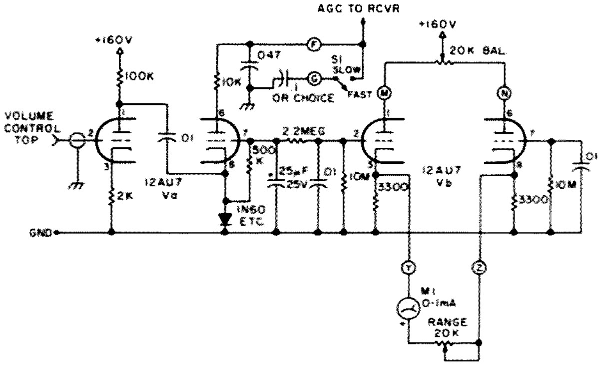

Fig. 3. Audio AVC on left (EI4R, 73, April, 1966). S-meter on right (R. L. Winklepleck, Popular Electronics, *February, 1963).*

Reconnect the antenna and tune in the strongest signal you can find and adjust the range pot for almost full scale reading. This gives about the accuracy of the average S-meter in any receiver (none), but will satisfy all but the purist, since the function of the S-meter is basically to compare relative signal strength anyway. For the more ambitious, we will go into a better calibration at a later date, as it requires you have more in the way of test equipment.

With a circuit board to work with, a loading diagram, and the circuit descriptions given, I believe I have about covered all you need to add these additions (our modification M-11) to your receiver. As with most of the modifications we are providing, you adventurers can add them to like or similar receivers at your own discretion. Just bear in mind I may have trouble helping you if you pick a receiver I am not familiar with, so you are on your own!

The only addition I can think of is, if you wish to use the S-meter on carrier-derived AVC as well, wire the board in accordingly. This involves removing the 2.2 megohm resistor from Va7 to Vb2 at the Va7 end only. Then run a wire from the center tap of the earlier mentioned switch (audio/carrier) back to the loose end of the resistor. This connects the S-meter to whichever AVC is in use instead of only the audio AVC output.

I will be back to writing again soon, and part IV will not be long behind this one. To wet your whistle, it includes a front end improvement (S-9er revisited), and sundry other "goodies." Until then, thanks for the 100% SASE rate so far (it sure helps!) and happy building! ■

EDITORIAL BY WAYNE GREEN

from page 169

handling several terminals simultaneously, each working on a different program . . . and this is because they work faster and use more memory.

Even an 8-bit computer can handle four to eight terminals and not tie up the users too badly if the computer is not going to be tied up with time-consuming calculations or sorting procedures. You have to fit the machine to the job you have for it.

As a rule of thumb, it is probably safe to say that few hobbyists or even small businesses actually need anything faster than an 8-bit computer. Mailing list sorts, which can tie things up, can be set to perk over night, rather than during prime time. In almost all cases the computer is going to be a lot faster than the operator, so it will be waiting for your input.

One other factor which has to be considered is the programs available for each of the systems. Now that the 8080 chip is three years old, there is a wide variety of programs which can be had for it. Don't sell the need for programs short. Sure, you can learn to write programs, but even when you are an expert you are going to want to buy a lot more programs than you are going to write yourself. It just takes too damned long to work out and perfect (debug) good programs.

While it *is* possible to write programs in machine language or assembler, you'll notice that few are being written that way. Too slow. The programs for microcomputers are being written in BASIC for the most part . . . and this is possible because there are BASIC language interpreters available for most of the computer systems on the market. Yes, I know there are dozens of different BASICs, but they are all similar and hopefully we'll gradually zero in on a standard BASIC. In the meanwhile, we're trying to publish BASIC-to-BASIC conversions in *Kilobaud* magazine.

Since 16-bit systems are new to the computer hobby world, there are few machine language programs available for these systems. As long as BASIC is

Continued on page 183

Dan S. Wise WA4BBU
P.O. Box 663
Bessemer City NC 28016

The Ham CBer

-- it could happen

We hear more and more every week about drafting some of the overly populated CB gang into the ham ranks. The idea here is that we would increase the number of amateurs, which would provide a better service. I, too, am in favor of helping potential hams get into amateur radio, but only to the extent that 1 believe it helps amateur radio. In fact, I would not be a ham myself if it weren't for the help of other hams. However, I had to sell myself to them first. I'm not sure I would be a good amateur if they had begged me, or if they had made it too easy for me. I think we should continue to draft CBers, but with quality in mind instead of quantity. In fact, I have personally written articles in the CB magazines explaining amateur radio.

Recently, I read in one of the ham magazines a proposal that the FCC allow amateurs to operate on the CB channels using their own call letters, the idea being that the amateur could help change the bad habits of the unlawful CBer, and help the FCC at the same time.

This reminds me of the preacher who tried to stop a group of church members from playing poker; however, while he was talking to them, he lost $53.67. I believe the amateur would be taking part in the unlawful operations instead of changing it.

I see a typical QSO as follows:

Ham: Hello CQ, Hello CQ, this is WA4BBU.

CBer: How 'bout that, ham; bring it on back one time to the Fat Albert.

Ham: Okay, let's see; I believe you said your handle was Albert, but I didn't get your call. The call here is Whiskey Alpha 4 Bravo Bravo Uniform. So back to you, old man.

CBer: (Difficult to understand this time; he has increased his power mike and is now overmodulating) How many pounds am I hitting you with? Kick it back.

Ham: Okay. Your signal strength here is 10 dB over S-9, Albert; we're running the Johnson Viking 23A here with 5 Watts input. So back to U, Albert; this is WA4BBU.

CBer: Okay ham, this is the Fat Albert back at U one time. We're running a converted Yaesu 101E with a slide channel switch and a SB220 flat out. What be your 20?

Ham: Okay, Albert. Fine business on the rig. We're located in Bessemer City, NC. I won't hold you any longer, but I still didn't get the call. So if you would pass it along to me on your final, 73 to U. This is WA4BBU.

CBer: We'll back-um on down. Have yourself a fine one. 3s and 8s upon you. Keep your eyes between the ditches and the Smokey out of your britches. It'll be the Big Bad Fat Albert; we're going to be down and out of it.

Another proposal I have read recently is to reduce the requirements for becoming a ham. My thoughts here are that if you don't work for it, you won't appreciate it. We as hams are allowed to talk anywhere in the world.

There are two main reasons for this: 1. Hams usually go by the rules and regulations, especially in overseas QSOs; and 2. The ham's ability to enhance international goodwill. I have read where CBers have killed other CBers because of one interfering with the other's conversation during a QSO. So if someone from another country talks over a CBer, let's just hope he cools off on the flight over, or we'll all have World War III on our hands.

I used the phrase earlier that we should look for quality instead of quantity. An example of this: During an emergency, would it be better to have 10 people answer the call who were not experienced in emergencies, or 1 answer the call who was? Another example: Most of us who are not involved in nets still give the nets plenty of room because we know it is a vital part of amateur radio. But would somone feel the same way if he were not so interested in the hobby that he had to pass a test at least as hard as it now is?

I am sure we can get great numbers into amateur radio. We can persuade CBers by begging them, cramming code into their heads, and cheating a little on the Novice test, etc. But have we helped amateur radio? Why not let things happen naturally? Let the CBer ask about ham radio, and then be sure he is interested. Maybe he's cut out to be a CBer; that could be his bag.

I'm all for making good hams out of CBers, and if he's as interested and willing as I was, I'll help him and I'll be very proud to be his first contact. ■

F. J. Soxman W3ZVT
PO Box 375
Shaw AFB SC 29152

Ham Shack Anthropometrics

-- maximize operating comfort !

Ever worked a long contest and left the shack feeling as though you'd wrestled three rounds with a grizzly? Are you operating more but enjoying it less? Maybe your shack needs a dose of anthropometrics! This technique is used in private industry to facilitate workplace design and ease worker strain during work. Anthropometrics recognizes body limitations and visual requirements and relates these to production requirements.

Most ham shacks are set up linearly, that is to say, equipment runs from right to left on the table. Usually it will be found that, reading from right to left, it's receiver, transmitter, and linear, with ancillary equipment either stacked about or below the main pile of equipment. Some stations just grow topsy-turvily; others remain relatively static. In practically all cases, station layout pays little heed to one prime factor, and that is operability by the amateur involved.

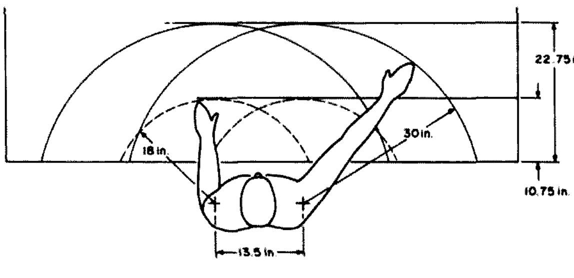

Fig. 1.

Fig. 1 is a diagram of reach for the average operator. Four arcs of reach are involved. The larger arcs are for the right and left arm at full extension; the smaller ones are arcs for the right and left arm using movements of the forearms only. It will be noted that these arcs are predicated on the trunk of the body being in a vertical position and not contributing to the reaching movements of the arms. This diagram indicates that the optimum reach areas are arcs with a radius of 30 inches which, taking body position into account, terminate 22 3/4" in from the edge of the operating desk. Forearm movements are restricted to 18" arcs with termination from the desk edge at 10 3/4". Fig. 2 is a side view showing arm movement in the vertical plane, again a 30" arc. A three dimensional drawing of both arcs would be an asymmetric portion of a sphere with the long axis on the horizontal plane and the short axis on the vertical (Fig. 3). This, then, is the optimum arm movement area at the operating desk that can be expected with the operator's trunk in an upright position. All equipment installed should be placed on these arcs to assure ease of operation with a minimum of body movement.

Another variable that enters here is eye fixation and head movements. Obviously there are areas of the arm arcs which, if followed by eye and/or head movements, would lead to discomfort in a short period of time. These areas, if used, should be given a lower priority than the more optimal areas.

When visual requirements are taken into account, the visual optimum arcs can be superimposed on the arm optimum arcs for a graphic presentation of the best visual/arm use areas (Fig. 4).

Now that the physical limitations have been defined, we can safely state that the optimum movement area consists of a 30 inch vertical arc in cross section and a horizontal shallow arc thirty inches deep and approximately 60 inches at its widest point.

The next task is to define the equipment used in frequency of use, visual requirements, and visual/manual requirements. Let's define each area:

1) Frequency of use – That equipment used the most, i.e., receiver vs transmitter, converters vs receivers, etc.

2) Visual requirements – The requirement to scan a visual display to gain information,

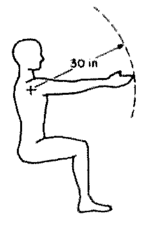

Fig. 2.

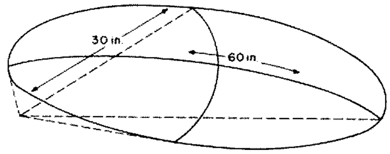

Fig. 3.

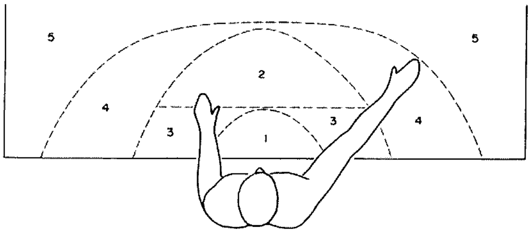

Fig. 4. Optimum areas for work requiring visual direction in order of priority. 1 — high priority, 5 — low priority.

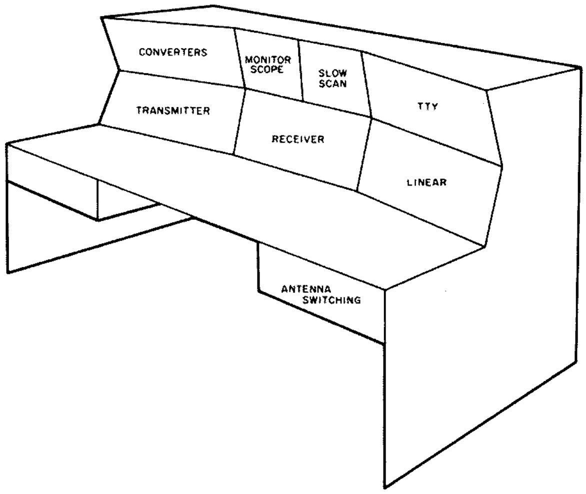

Fig. 5. Teletype/typewriter would be on the left or right side of the console.

i.e., swr bridge vs monitor scope, monitor scope vs slow scan display, clock vs any of the above.

3) Visual/manual requirements — The requirement to manipulate vs the requirement to see the results of said manipulation, i.e., speed key vs transmitter (tune-up), antenna option switching, etc.

Let's build a matrix of equipment vs these functions and see what we come up with. (See Table 1.) As you can see, the equipment is numbered in order of importance according to the various characteristics defined earlier. Of course the ranking given here may not reflect individual operator inclination or preferred modes of operation. The matrix provides a means of comparing the different attributes and uses of equipment to facilitate its final placement in relation to other equipment in these three defined areas. The sums of the equipment characteristics A+B+C are indicative of order of relative placement importance, while examination of the separate rankings define placement within each area. Should this information be utilized to design an operating position, it would look something like Fig. 5.

The use of these techniques and equipment analysis may be extended to larger stations where large amounts of equipment are involved. In some cases, where various modes of operation are identified for specific equipment, each mode may be treated as another station and a horseshoe shaped station arrangement may be required.

For individuals interested in furthering their knowledge and adapting other industrial engineering techniques to ham shack layout and design, the publications listed in the references will provide amplification of the principles outlined in this article. ■

References

1. *Industrial Engineering Handbook*, H. B. Maynard, McGraw-Hill Book Company.

2. *Motion and Time Study*, M. E. Mundel, Prentice-Hall, Inc.

Table 1.

EQUIPMENT	A FREQ. OF USE	B VISUAL	C MANUAL/ VISUAL	TOTAL A+B+C
Receiver	1	2	2	5
Transmitter	2	1	2	5
Linear	3	3	3	9
Monitor Scope	4	1	2	7
Slow Scan Monitor	4	1	1	6
Keyer	2	0	0	2
Antenna Switching	4	3	4	11
Converters	4	4	3	11
Typewriter	2	2	2	6
Teletype	2	2	2	6

LETTERS

from page 8

was getting about 60% of it right away, and began getting groups after the first 15 minutes. After three 15-minute sessions a day apart, I was getting 4 or 5 groups between misses. That decided me. If I'm going to have to take time off from work to go downtown for a test, I might as well do it once and be done with it; plans for getting an Advanced are hereby scrubbed. Unless I blow the code test, of course. Which I probably will, unless I get my iambic keyer designed pretty soon. Mild arthritis.

Meanwhile, I accidentally discovered an interesting way to use the tapes. I found that the fast tape got all my reflexes speeded up, so that I could recognize letters faster. This helped me with the slower tape, because now I didn't have to work hard and struggle frantically to keep up. That meant that I was on top of it most of the time, and when a character came along that I was still slow to recognize, I could lock my attention right onto it for an extra 100 milliseconds, and not get hopelessly lost. Not the proper strategy for taking a code test or copying a message, but just the thing for efficient learning. Then, jumping back to the fast tape, I was starting to catch the ones I'd missed completely before. The result is a ratchet action that helps me at both speeds, and I make faster progress than I would at either speed alone. Right now, I begin a session with a minute or so at 21, half a page at 14, then more 21 until I get tired and my miss rate goes up. A couple more weeks ought to do it.

Well, keep up the good work. It's a pleasure to read a magazine that "thinks of what has never been, and asks, 'Why not?'"

John A. Carroll
Bedford MA

10 FEVER

I am interested in a national band

Continued on page 179

Elliott S. Kanter W9KXJ
3242 W. Hollywood Ave.
Chicago IL 60659

Hands-free Mobile Mike

-- especially for four-speeds!

How many times have you wished that you didn't have to use a separate microphone when mobiling, or for that matter had your XYL complain about the noise from your rig's loudspeaker interfering with her bridge meeting, or for that matter wanted totally hands-free operation with your VOX? For those of you who share one or more of the above with me and countless other hams, the TELEX CB-88 lightweight headset seems to fit the bill and more.

Although it was primarily introduced to meet the growing Citizens Band marketplace, the nice fellows out at their plant haven't forgotten the first major consumers of their quality headphones, etc. – the hams. It just so happens that their single-sided aviation-style headset can be worn over either ear, or detached from the banded headset and placed directly on your eyeglass frames for the ultimate in comfort. The amplified, noise canceling microphone is magnetic, and is fitted on a pivoting boom which will allow you to adjust the microphone for the ultimate in comfort and placement. There's a push-to-talk switch, which makes it a natural for applications with 2 meter transceivers, as well as for wiring the microphone for use with SSB rigs, etc., which utilize VOX circuitry.

The unit looked too good to be true, so I acquired a Catalog No. 63388-003, which is listed as the special mike switching model for use with E. F. Johnson transceivers. The reason this model was specified was that interconnections were possible with the enclosed instructions to enable connections of interfaces with a majority of the rigs available today.

The microphone has an adjustable amplifier and noise-canceling, handled by a single IC, and a 7.0 V mercury battery which is included. The single side-mounted magnetic earphone reproduces sounds and channels them into the ear via a soft tubing arrangement; a total of three differently sized eartips are included, to fit any user. The microphone can be adjusted for maximum "talk power" while you are speaking at a normal conversational tone and level. The calibrated level control is adjustable, without the need for any tools.

The entire package can be worn over the right or left ear, and has a cable assembly eight feet long with a push-to-talk switch assembly, microphone amplifier unit with gain control, and a clip to hold it on your clothes if you utilize the push-to-talk feature.

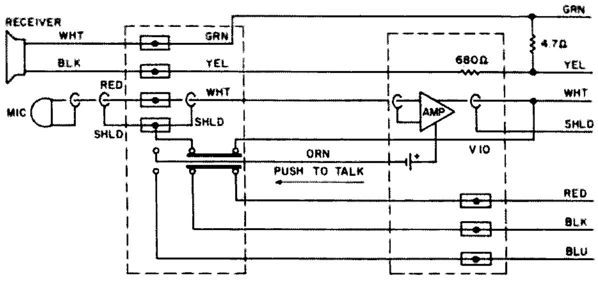

Fig. 1. Shorted mike switching.

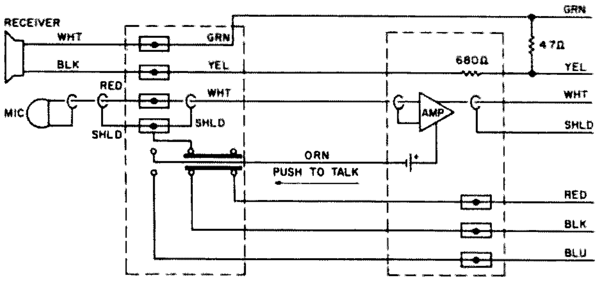

Fig. 2. Non-shorted mike switching.

INTERCONNECTION CHART

Manufacturer/Model Number	Headset	Green	Yellow	Blue	White	Shield	Red	Black
Drake TR-3, -4, 4XB	002	EXTSPKR	EXTSPKR	TIP	RING	SLV	N.C.	SLV
Genave GTX-100, GTX2, 200, 10 200T, GTX600	001	EXTSPKR	EXTSPKR	TIP	RING	SLV	N.C.	SLV
Heath SB-101, HW18	002	SPKR	SPKR	2/BLK	1/WHT	SHLD	N.C.	SHLD/RED
Kenwood TS520	002	EXTSPKR	EXTSPKR	2	1	4	N.C.	3*
Siltronix 1011C, B	002	EXTSPKR	EXTSPKR	TIP	RING	SLV	N.C.	SLV
Standard Communications								
SR-C830S50, Horizon 25,	002	EXTSPKR	EXTSPKR	3	2	1	4	1
C852S12B, C852S50, C807500,	002	EXTSPKR	EXTSPKR	3	1	2	4	1
C830550, src-8905	002	4	2	3	1	2	N.C.	2
Yaesu FT-101B-B_2	002	EXTSPKR	EXTSPKR	3	2	1	N.C.	1

User has the option of utilizing headset 003 with interconnection changes per wiring diagrams, or purchasing indicated headset for rig as noted above. * Note: Jumper white leads in switch.

For rigs not listed, you can send TELEX a wiring diagram of rig and they will furnish data and suggested headset number. Address queries to TELEX Communications, Inc., 9600 Aldrich St., South Minneapolis MN 55420, Attention CB Headset Product Support Manager.

The accompanying chart will allow you to connect the CB-88 to the microphone input circuits of the rigs listed. We are grateful to Mr. Sidney Kitrell, the Director of Marketing of TELEX's Aircraft/Professional/Industrial division, for permission to reprint this data. At a mere $69.95 and less than 3 ounces of weight, the CB-88 is a real asset to a station. I know it was to mine. The only minus feature I found was the light weight. I found myself walking away from the rig with microphone/earphone, etc., still attached to my glasses — I've got to put some note to remind myself not to do that again. If you do use the CB-88 and have any problems with RFI while operating mobile or "walking-mobile," TELEX has a service bulletin with the cures for your problems (available at no charge). Happy hands-free operating! ■

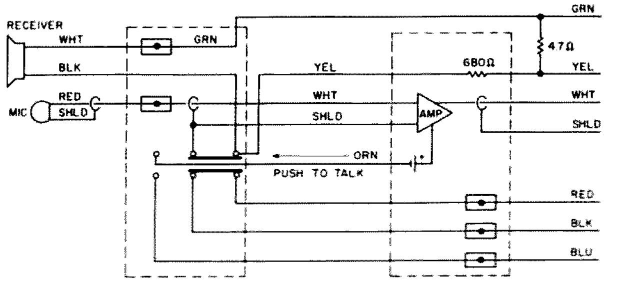

Fig. 3. Special mike switching.

LETTERS

from page 175

plan for 10m AM and SSB, using converted CB sets, and hope to start converting one as soon as a national plan is established.

Ten meter FM operation is very seldom ever mentioned in any of the ham magazines, yet it is definitely growing very rapidly. It seems that every day there are new stations just getting started. Simplex operation on 29.60 has gotten so crowded when the band is open that many operators are using alternate frequencies such as 29.64, 29.68, etc. Beacon stations, remote bases, and repeaters also add to the congestion, but everyone still has a really great time.

Equipment being used on 29.6 is mainly converted commercial gear, although a few people are using rigs like converted Regency HR-6s, Yaesu FT-101s, Gonset GSB-100s, Kenwood transverters converted to work from 6 to 10 (backwards), and now some of the PLL CB sets. A number of people have 1.5 Watt HT-200 HTs, and are working all over the country using the built-in 18-inch antenna.

Some groups around the country have tied a 29.6 MHz base station into their existing 2 meter repeaters, which gives HT-to-HT coverage over thousands of miles. It's really impressive to show it off!

With the new CB channels available to the consumer, a lot of excellent commercial equipment operating around 27.3 MHz has become available at reasonable prices, such as "Micors," "Motracs," and "Mast'rs," including base stations, mobiles, and portables.

A number of us on the west coast try to keep information on the active stations on 29.6 and any unusual equipment modifications. We most likely can put someone who might be interested in getting started on 29.6 in touch with someone fairly close to him, or refer someone to the right person for answers to questions regarding conversion of a particular piece of gear.

I have asked various hams running

Continued on page 181

Bob Wilson WA1IZS
11 Lowell Street
Arlington MA 02174

Heath HT Goodies

-- add a whip and offsets

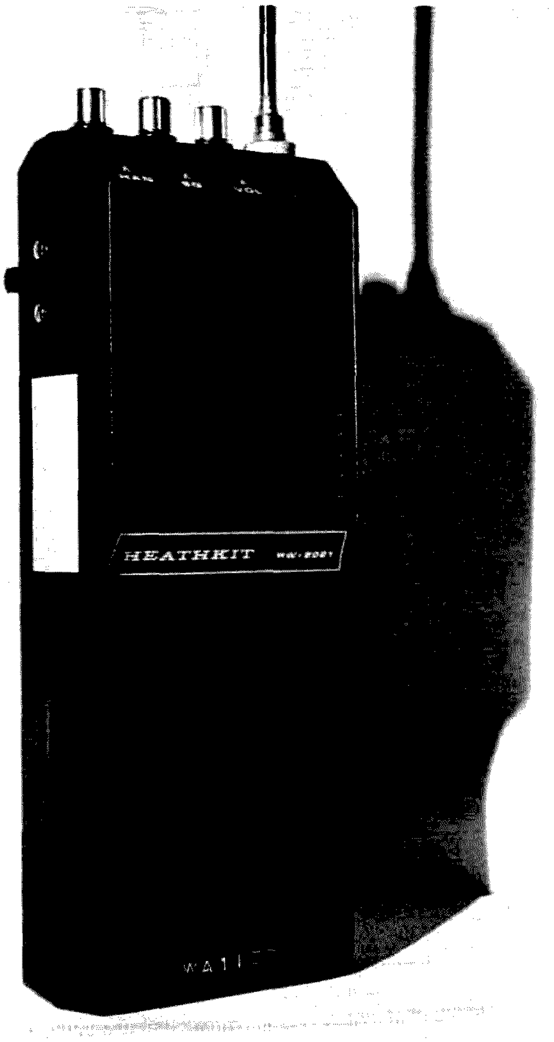

How would you like to make a good 2 meter rig even better and more versatile at low cost? Sounds good? I thought so too!

This article will cover the modifications made to my Heath HW-2021 to allow *two* selectable transmit offsets as well as simplex operation at the flip of a switch. In addition, I've included a description of a simple yet effective ¼ wave telescoping whip you can make in minutes.

I'm sure it must have occurred to many owners or prospective owners of the HW-2021 that it would sure be nice if the rig allowed operation on 146 MHz repeaters as well as the 147 MHz splits without sacrificing simplex capability. If assembled according to Heath instructions, the rig allows either two separate transmitter offsets or one offset and simplex.

Theory of Operation

The transmitter employs a rather unique mixing chain operating at the same frequency as the receiver i-f (10.7 MHz). As supplied by Heath, the offset switch is a DPDT wired as an SPDT. This allows selection of either a 10.7 MHz crystal (for simplex operation) or a 10.1 MHz crystal (for -600 kHz offset).

All that is necessary for dual offset and simplex capability is a new switch, the appropriate frequency offset crystal, and a few wiring changes.

Construction

Although it should certainly be possible to add all these changes to an already assembled transceiver, it will definitely be easier to make them during initial construction as I did.

Rather than try and squeeze in an additional crystal socket for the extra offset, I chose to hijack one of the *channel* crystal sockets and rewire it. Referring to the Heathkit schematic, eliminate the gray wire to hole E, as well as C48, C54, R61, R62, and D7. Now, using a scalpel or similar instrument, cut the PC track between sockets Y6 and Y5 *after* C54 (keep that scalpel handy, you'll need it later). Install jumper wires in the place of R61 and C48. Replace C43 with an axial lead version of the same value and solder it *beneath* the main circuit board or it will be in the way of the new offset switch, which is slightly larger. That completes the wiring changes to the PC board, which may be set aside for now.

It's now time to wire and install the new offset switch. A double pole, three position

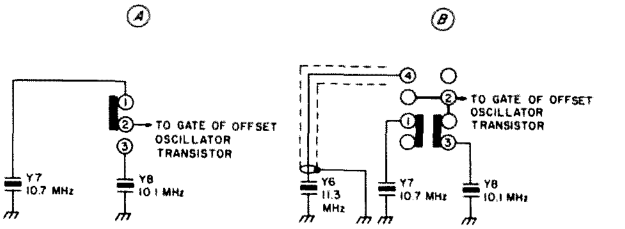

Fig. 1. Transmit offset switching. (a) As originally wired. (b) Modified with new switch and additional capability. Heavy lines indicate hookup wire at switch.

switch is called for here. In case you have trouble locating one, I purchased mine at four for one dollar ($1.00) from "Poly Paks" in South Lynnfield, Massachusetts (catalog #92CU2666). Once you determine what leads are necessary to wire it in accordance with Fig. 1(b), clip all the extra leads and protrusions flush. As is obvious from the photo of the two switches, the new replacement will require a slightly different mounting procedure. Take the scalpel you set aside previously and carefully trim away the mounting tabs from the inside of the lower case half. A flat file should now be used to enlarge the switch cut out, allowing for the extra travel of the three position switch. If you use the same switch I did, about 1/32" on each side should be right. Make sure you file slowly and at a slight inward angle so as to not remove too much plastic or have any raw edges showing. If you've gotten this far, you're almost home!

Draw a template of the switch front on a piece of paper indicating the location of the mounting holes. Tape this to the outside of the case exactly in the position you will be mounting the switch and drill out the two mounting holes. A drill press is advisable; however, a hand drill operated by a steady hand will do. Remove the template.

All that remains now is to mount the switch with two short screws and wire it up. A short length of RG/62 is recommended for the switch to board wiring. The outer braid is left floating at the switch end. The inner lead may be conveniently wired to the board at the lower hole formerly occupied by C54. I found it convenient to mount the switch so it simulated mechanically what was going on electrically, i.e., in the up position, the transmitter frequency is shifted up, etc. Plug the crystal for your desired offset frequency into Y6. Follow the crystal ordering information on page 61 of the Heath manual.

The Telescoping Whip

A telescoping whip can be easily added to the HW-2021 to increase its range in the field. Simply take a ¼" single-hole-mount phono jack and snip off the inner conductor solder lug since it won't be needed. To this you will mate a Philmore "TRA" whip. This whip comes with a removable thread adaptor and retails for about $1.50.

Temporarily secure or clamp the phono jack securely in an upright position. Place the adaptor slotted end up in the opening of the jack and solder. It is a close fit, so you won't need much solder. Screw the upper whip section into the adaptor and reinforce with a single drop of epoxy on each side of the slot.

Once the epoxy is thoroughly dry, your assembly is complete. Have fun!

My special thanks to WA1ZDE without whom I probably would never have finished this project (much less gotten it typed) and to WA1ION for his photographs. ■

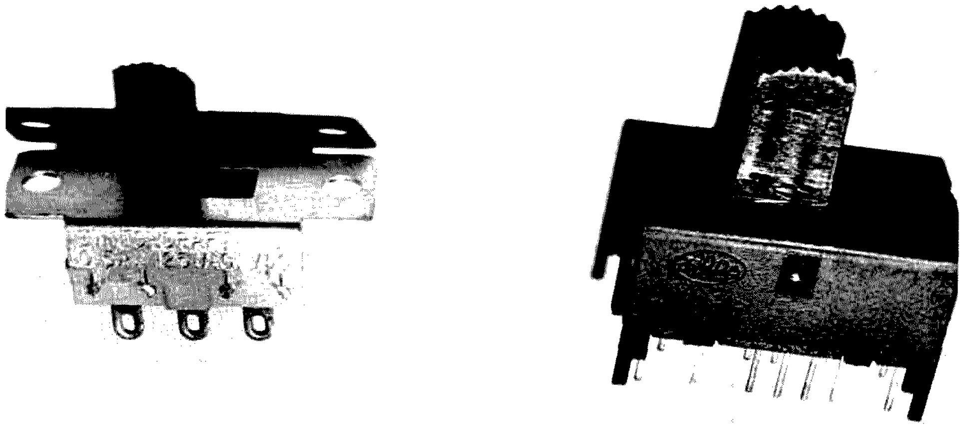

View of the original switch and larger replacement. The longer extension of the slide on the new switch has the advantage of being more readily accessible when using the Heath accessory case.

LETTERS

from page 179

rigs which might be converted easily, such as CB sets, Yaesus, etc., to consider writing up an article for publication.

Larry R. Johnson K7VZH
29560 SW Brown Rd., Apt. 4
Wilsonville OR 97070

LEAGUE REPORTS

Did you know that the ARRL has yearly reports (their annual reports) printed and that they do not make this fact known to their own members? They just sent me their 1976 annual report, and I think that all hams interested in the ARRL should request the same from them.

I also think that all ARRL members should question why *QST* never mentions these reports or even publishes excerpts from them once a year.

Could it be that the ARRL does not want people to find out about all the stocks and bonds they own and how they could have sold some of these to finance their building addition (rather than raising dues to $12 yearly)?

Lawrence I. Cotariu
Skokie IL

Yes, I knew. As the editor of another ham magazine said after reading the report, "Who says QST doesn't publish fiction?" – Wayne.

A WORD FROM HUGHES

Your September, 1977, issue included an article by Michael I. Cohen on building "A Practical 2m Synthesizer." One of the components called out was the Hughes HCTR 0320 synthesizer. Your readers should be aware that they can get this part from one of our two distributors, namely Semiconductor Technology, Inc., 124-14 22nd Avenue, College Point NY 11356, or Calmarc Sales, 1651 E. Edinger, Suite 207, Santa Ana CA 92705.

N. E. Moyer
Hughes Aircraft Company
Newport Beach CA

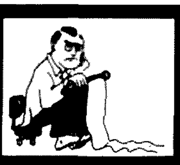

...de W2NSD/1

EDITORIAL BY WAYNE GREEN

from page 171

available for the 16-bit machines, there is no problem. Heath provides BASIC with their H11, by the way.

Most of us involved with microcomputers have gone into the hobby for the fun of it, and we get a little edgy when people get insistent about what we are going to *do* with them. Oh, by now we have a long list of great things which *can* be done . . . they'll run repeaters and make incredible things simple with them . . . they'll translate Morse code, RTTY, slow scan . . . watch for the new Digital Group hamboard, just released. They let you play a lot of nice games . . . enough to keep any visitor involved for hours. More and more hams are using their computers instead of typewriters . . . I sure wish they would get typewriter-type printers instead of dot matrix printers for typing up articles for submission . . . dot matrix is *not* easy to read.

Not a few of us feel a deep need to keep up, and we realize that we aren't keeping up if we don't get in there and mess with computers. It isn't a matter of getting ready for a new career — it's one of pride in understanding what's coming down technically these days.

A lot of old-timers I've talked with recently are deeply involved with microcomputers. They're bound and determined that they are not going to try to avoid progress the way they did when transistors came along 15 years ago. They put off working with solid state until it was unavoidable. Now they realize that they missed a lot of fun. Was it only ten years ago that *QST* explained that the reason they had so little on transistors was that they would never replace tubes . . . that hams were tube people? How time flies.

Getting back to the bits and bytes . . . unless you have a lot of stuff for your computer to massage, you'll probably do just fine with an 8-bit machine. Of course, if you are rich and looking for ways to spend money, the 16-bit machine may be attractive. The Heath systems are not out of line . . . with the 8-bit system CPU (central processing unit . . . the heart of your computer) costing $375 and the 16-bit, $1295. That's a lot of extra bucks for extra speed . . . if you don't really need it.

Buying the 16-bit Heath system qualifies you to buy programs from Digital Equipment Corporation (DEC), which may or may not be a benefit. I've looked over their list of available programs and I'm not sure. Once I have an H11 and a chance to try out some of the DEC programs, I'll know better about this. If any readers can help us along this line, take typewriter in hand (no dot matrix printers . . . please).

ARTICLES ANYONE?

While articles on any of the microcomputers are of interest for publication in *73*, in particular I'd like to see material on using the Radio Shack TRS-80, the PET, and the Heath systems. I think we would all be interested in your evaluation of these systems while they are new . . . any ham uses you may develop . . . any modifications . . . accessories . . . programs.

I'll be working with these systems and letting you know how I make out. I already have a TRS-80 with a couple of the Radio Shack business programs . . . plus a great lunar landing game sent in by Ed Juge (remember Juge Electronics in Fort Worth?).

If you're thinking of writing articles for *73* or *Kilobaud*, you can send for the "How to Write For" instructions . . . or you can use your head, double space and generously margin, and include professional-quality pictures.

MAKE EXTRA MONEY, HAVE FUN, HELP AMATEUR RADIO GROW

How would you like to make some extra money in your spare time to help you build your ham station? Wouldn't you like to be able to get the latest in ham gear? The fact is that your hobby *can* pay for itself.

At the same time that you are making money, you will also be helping amateur radio to grow by helping to interest newcomers in the hobby . . . and we need all of the new amateurs we can get, as you know.

73 Magazine is looking for Area Representatives to distribute *73 Magazine* and *Kilobaud* to newsstands, bookstores, discount stores, supermarkets, drugstores, etc. In addition to distribution of the monthly copies of these magazines, Area Representatives would also sell magazines, books, and subscriptions at hamfests, ham auctions, and other local ham events. Radio stores, CB dealers, etc., can also be serviced by Area Representatives.

Here's a way to enjoy your hobby, to be a real part of it, and to make money while you are having fun. It sure doesn't seem much like work.

Area Representatives who are successful will be offered the opportunity to increase their business by taking on additional special interest magazines for newsstand distribution. The business can grow to any size you wish.

73 sells well on the newsstands. Tests in several areas show that even though every magazine rack in an area is stocked with copies of *73*, at least one or two copies are sold from even the smallest of racks. *73* interests hams, SWLs, CBers, experimenters, students, computer hobbyists, electronics professionals, technicians, etc.

If you are interested in details on how you can earn from $50 to $500 (or even more) a month, write to Sherry Smythe, Marketing Director, *73 Magazine*, Peterborough NH 03458. Once you sign up you'll get monthly shipments of magazines which are to be sold on consignment (the store only has to pay for copies sold, so the project costs them nothing). You report and pay for copies sold each month and keep back issues in stock for sale at hamfests, etc.

Just think, with a few hours work each month you might be able to have a fantastic ham station before the end of 1978. Drop Sherry a line and get started . . . if you are the kind of person who gets things done and can carry things through.

THE FATE OF THE LONE PIONEER

Many a pioneering effort in amateur radio has fallen on its face because the people doing the spadework were too busy to pass along news of their accomplishments. A handful of pioneers have been doing most of the serious work in UHF and microwave pioneering, but they are remaining few in number and progress has been slow because they have not recognized the importance of being published.

It takes state-of-the-art articles on pioneering efforts to attract more people. And it takes a lot of pioneers to result in any measurable progress. Thus, the ham builder who works up a really fantastic circuit for 1296 MHz and keeps it to himself or even restricts the information to a small circle of friends is really negating everything he has been doing.

A good article on a pioneering subject will fire up enthusiasm in many parts of the world and get more experimentally-minded amateurs working. If they in turn communicate their progress, the whole field can move ahead much faster.

Right now, I see a decided shortage of articles on developments in microwaves . . . in low noise VHF reception . . . in RTTY circuits . . . in repeater linking . . . in duplex operation . . . in narrowband transmissions . . . in microcomputer hamming, etc.

We've been living with DX pileups for all of our amateur lives, and nothing serious has been done to propose a solution to that problem. Oh, we've worked out list operating, and a bunch of systems for easing the problem, but nothing really fast and sure. How about some creative thinking along this line?

Could time multiplex be developed which would permit simulated duplex operation on one channel? As Uncle Don used to say . . . let's put on our thinking caps . . . and do a bit more pioneering . . . and write it up.

TURKEY HUNTING

We used to call it fox hunting, but in view of the current huntees, perhaps a more apt name is appropriate. We do need to get our ham act together for locating turkeys who insist on jamming our repeaters, who pop up on the low end of ten meters, or who may eventually start turning up on the ham-band-converted CB rigs.

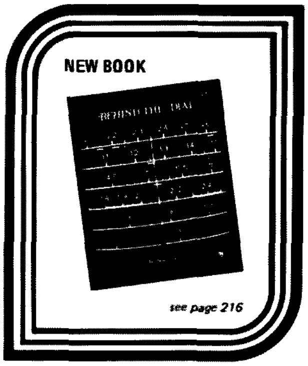

The fact is that we need to have a lot of articles on the building of quick antennas for turkey hunts. We need to have clubs organize turkey hunts for practice. We need some designs for instant direction-finding. If the FCC vans can do it, so can we. When you come up with something that works well, be sure to write it up and send it in to *73* so we can pass the word along for everyone else.

There is a growing need for new ham products along this line, too . . . for those of you of an entrepreneurial nature. Once turkeys can be located quickly, we should have a lot less trouble with them.

The recent ability of two hams to outwit everyone in their area for almost a year, kerchunking and cursing over local repeaters at will, points up the need for more ham responsibility in this area. The gang had to send for the FCC van to locate the bad guys. Tsk. Wouldn't you know one of the turkeys was an Extra class ham? The next time you're badmouthing a CBer, remember that at least two Extra class hams have been convicted of transmitting profanity over extended periods of time. One of them spent a lot of time on the CB channels, driving everyone crazy.

TESTED BY YOU

If you are one of those pioneer types who rushes out and buys the newest in ham gear, plan on taking a little extra time to write a letter to *73* outlining your experiences for the benefit of other readers. Tell us what you like about the rig . . . what you don't like. If you've made any modifications, let us know about them, too. Every reader wants to know what others think of the new ham rigs, and a simple checkout by me isn't all that helpful.

In case you haven't noticed, virtually the entire *73 Magazine* is written by the readers . . . you. This is a way for those of you who are doing things to let others know what you've done . . . what you like . . . don't like. So hold up your end of the deal by writing, whether it be articles on things you've built or letters about equipment you've tested.

The advertisers? They pick up the printing bill for you . . . so the more advertisers you encourage to use *73*, the more pages of articles and letters you'll have to read each month.

Tony Urbizu WB4TED
1159 46th Ave. NW
Fort Lauderdale FL 33313

Try A Sensor Keyer

-- almost pressure-free CW

After I assembled the Heathkit CW Keyer HD-10, I noticed that, because it uses 1 pair of microswitches, the sending was somewhat erratic. I discovered that this keyer has the versatility for hooking up an external paddle. The ones on the market are a little expensive, from $15.00 to $25.00, and some real fancy ones will go up to $40.00. The price of my keyer complete will run about $39.95; that will put the price at 100% of its value. This paddle also uses switches and contacts in order to produce the characteristic CW rhythm.

The state of the art calls for a transistor to be a switch. Keeping this in mind, the tool was laid to produce an all solid state paddle, without the need of switches or contacts.

Next I was to produce a circuit that would amplify by the touch of the finger and act as a switch. I decided to use a Darlington pair configuration. The gain on this amplifier is about 1000.

By experiments, we know that body resistance is about 10k Ohms at skin level. It will go lower in persons who have a high perspiration rate.

I then designed the pattern which was etched out on a printed circuit board. It resembled several letter Ts together and upside down (see Fig. 2). This will cause the finger to act as a resistor when placed over it. After the etching was done, a coat of solder was laid over the design to prevent the lamination from getting tarnished — high salt content will cause this. The etching was done on both sides, to cover one side for "dots" and the other side for the "dashes."

In the schematic, we see that the emitter of Q1 is connected directly to the base of Q2. As the finger is placed over the etched pattern, a little current flows over to the base (Q1). (Ohm's law: I = E/R; 10 V/10k = 1 mA.)

The gain of this transistor will drive Q1 close to saturation. At the same time, Q2 will be driven to saturation, causing it to act as a switch. Presto! We now have a CW paddle.

In order to provide some voltage to the unit from the

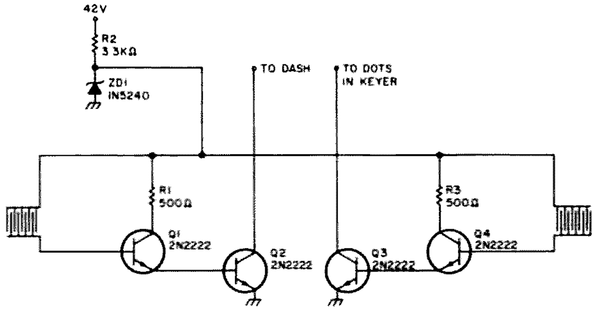

Fig. 1. R1, Re — 500Ω, ½ W; R2 — 3.3kΩ, ½ W; Q1, Q2, Q3, Q4 — 2N2222 or equivalent; ZD1 — 10 V, .5W 1N5240.

42 volts output, we brought it from the back of the Heathkit keyer and brought it into the paddle. A 3.3k Ohm resistor and a 10 V zener diode in series to ground was used, in order to produce a 10 volts bias to supply Vcc to the transistors.

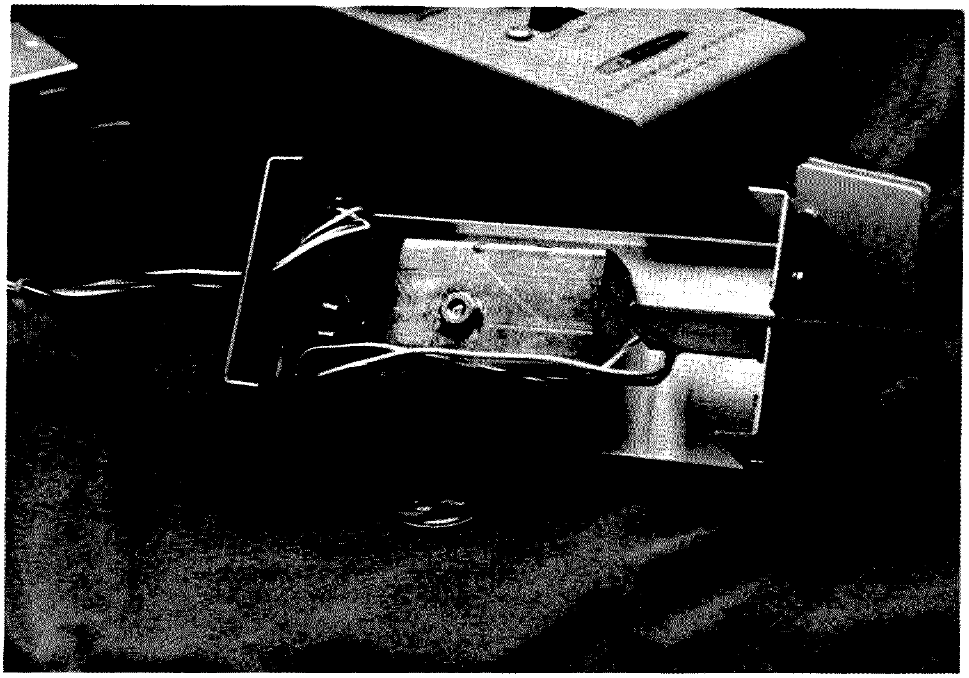

Construction

Construction is made on a 2" x 5" x 2" high aluminum box. A slot about 1/8" was cut vertically on the front side, in order to allow the etched board to fit through the box. Two little brackets were formed from a 1/16" sheet of aluminum, and bent 90° and attached with a #4-40 ¼" screw. The same thing was done on the etched board. Be cautious when placing the etched board so it will not touch the chassis. This can be easily done with a pair of vise grips to hold it in place before you drill or punch the holes. Another PC board was etched to make the Q1, Q2, Q3, Q4, and regulating circuits. This was placed on the opposite side of the box in order to make room for about 1 or 2 pounds of lead. This is to make it heavier. (Good suppliers for lead are plumbing supply houses.) This lead was fastened to the center and attached with a #8-32 x 3" long bolt. The wire used to connect the back of the Heathkit keyer was #22 insulated stranded wire. To put on the finishing touches, 2" weather stripping was fixed to the bottom of the box so that it would have a better grip on the table or the surface where it will be placed. The XYL, WA4FUA, has been using it for some time now. At the beginning, she found it very sensitive to operate. She had a little difficulty in trying to get used to it, since there is no need for pushing or waiting for the switch to close. Just placing your finger over it will cause the transistor to close. I find it very easy to operate, and now I don't have that somehow erratic rhythm. --.... ....--■

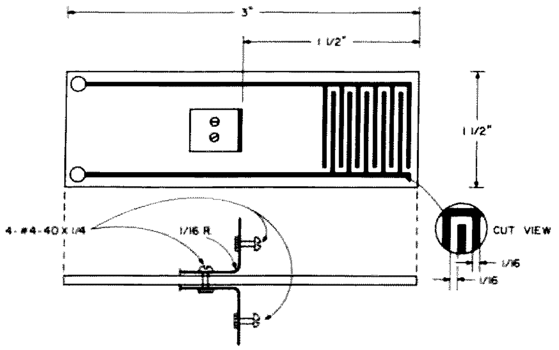

Fig. 2. Etch board on both sides.

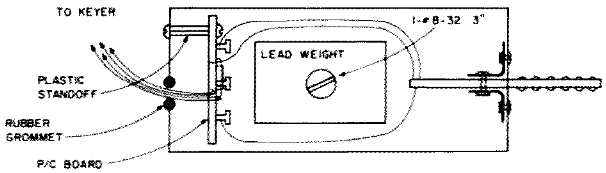

Fig. 3. Box layout, top of box looking up.

FCC

from page 16

radio station in repeater operation shall not exceed the power specified for the antenna height above average terrain in the following table:

[In watts]

Antenna height above average terrain	Maximum effective radiated power for frequency bands above:			
	52 MHz	144.5 MHz	420 MHz	1215 MHz
Below 50 ft	100	800	(1)	----------
50 to 99 ft	100	400	(1)	----------
100 to 499 ft	50	400	800	(1)
500 to 999 ft	25	200	800	(1)
Above 1,000 ft	25	100	400	(1)

[1] Paragraphs (a) and (b).

4. § 97.84(d) is amended to read, as follows:

§ 97.84 **Station identification.**

* * * * *

(d) When an amateur radio station is in repeater or auxiliary operation, the following additional identifying information shall be transmitted:

(1) When identifying by radiotelephony, a station in repeater operation shall transmit the word "repeater" at the end of the station call sign. When identifying by radiotelegraphy, a station in repeater operation shall transmit the fraction bar, $\overline{\text{DN}}$, followed by the letters "RPT" at the end of the station call sign.

(2) When identifying by radiotelephony, a station in auxiliary operation shall transmit the word "auxiliary" at the end of the station call sign. When identifying by radiotelegraphy, a station in auxiliary operation shall transmit the fraction bar, $\overline{\text{DN}}$, followed by the letters "AUX" at the end of the station call sign.

* * * * *

5. § 97.88(a) is amended to read, as follows:

§ 97.88 **Operation of a station by remote control.**

An amateur radio station may be operated by remote control only if there is compliance with the following:

(a) A photocopy of the remotely controlled station license shall be:

(1) Posted in a conspicuous place at the remotely controlled transmitter location, and

(2) Placed in the station log of each authorized control operator.

PART 97—AMATEUR RADIO SERVICE

Simplifying Licensing and Operation of Complex Systems of Stations and Modifying Repeater Subbands in the Amateur Radio Service

ACTION: Memorandum Opinion and order staying regulations in Docket 21033.

SUMMARY: The Commission is staying regulations it adopted in a Report and Order in Docket 21033 (42 FR 52418, September 30, 1977) concerning the licensing and operation of repeater and associated stations in the Amateur Radio Service. We are taking this action in response to a Petition for Stay filed by the American Radio Relay League, Inc.

SUPPLEMENTARY INFORMATION:

In the matter of deregulation of Part 97 of the Commission's rules to simplify the licensing and operation of complex systems of stations and modify repeater subbands in the Amateur Radio Service (Docket No. 21033, RM-2664, RM-2780) MEMORANDUM OPINION AND ORDER (See 42 FR 52418).

Adopted: November 4, 1977.

Released: November 4, 1977.

Continued on page 189

C. W. Andreasen N6WA/WA6JMM
PO Box 8306
Van Nuys CA 91409

Logical Logic

-- some basic tips

As anyone who has tried working with digital logic will attest, if a system of proper symbols is not used and understood, it is almost impossible to figure out what is going on. As a result, troubleshooting becomes a very difficult task. Industry has long recognized this problem, and has developed a standard system of symbols that allows anyone familiar with the system to see, at a glance, what is supposed to happen with a logic element. It is evident that many struggling experimenters do not know how the system works and are severely handicapped.

The intent of this article is not to present anything new, but to present the system used by the industry to the experimenter. This system complies with MIL-STD 806D, and should be kept handy as a reference until it is committed to memory. Believe me, once a person gets used to using the system, it can't be done without.

Gates

Most industrial schematics are drawn using functional logic symbols. The gate symbols, with a high level indicated by A and a low level by $\overline{A}$, are shown in Fig. 1, with their use indicated in Table 1.

The inverter shown in Fig. 1(e) is used when the asserted level of the input is high, while the inverter of Fig. 1(f) is used when the asserted level of the input is low.

This simply means that the desired output is determined by the level of assertion of the input and dictates the way the inverter is drawn. If the output of the gate described in Example 2 were to be inverted, the symbol shown in Fig. 1(e) would be used. (See Fig. 2.)

Now that we've seen how to pick the gate for a simple function, let's look at a more complicated circuit (Example 5) that combines several of these gates.

Notice that gates 1, 2 and 3 exhibit an "ANDing" function, and are drawn as such, using Figs. 1(c), 1(b), and 1(b) respectively. However, gates 4 and 5 are used in an "ORing" capacity, so Fig. 1(a) is used.

In any system there is some ambiguity, and the problem that is generated by using this system is illustrated by Example 6.

Notice that the output of gate 1 (a NAND) is used as the input of two gates. In gate 2 we want a low signal, and in gate 3 we want a high signal. Therefore, the symbol used should indicate both high and low outputs. This, obviously, is impossible. Therefore, the symbol is drawn in terms of the designer's signal flow, i.e., if A or B is low, then the gate 3 will be enabled. Otherwise, gate 2 will be enabled. It can be argued that the signal flow

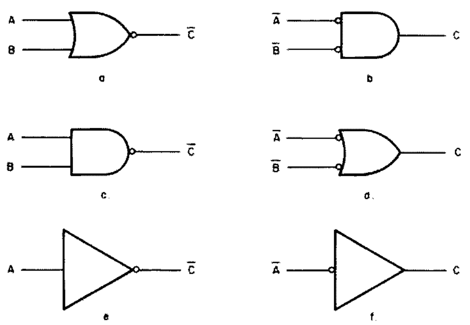

Fig. 1.

Fig.	Name	Boolean Expression	Level of Desired Output
1(a)	NOR	$\overline{C} = A + B$	low
1(b)	NOR	$C = \overline{A} \cdot \overline{B}$	high
1(c)	NAND	$\overline{C} = A \cdot B$	low
1(d)	NAND	$C = \overline{A} + \overline{B}$	high
1(e)	NOT	$\overline{C} = A$	low
1(f)	NOT	$C = \overline{A}$	high

Table 1. Note that, by De Morgan's theorem, it can be proven that the Boolean expressions for Figs. 1(a) and 1(b) or 1(c) and 1(d) or 1(e) and 1(f) are identical.

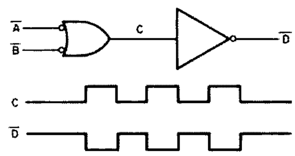

Fig. 2.

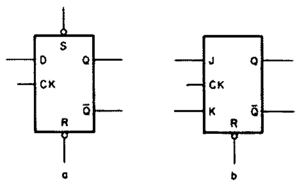

Fig. 3.

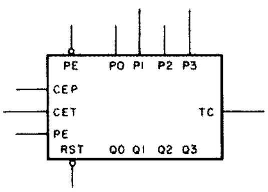

Fig. 4.

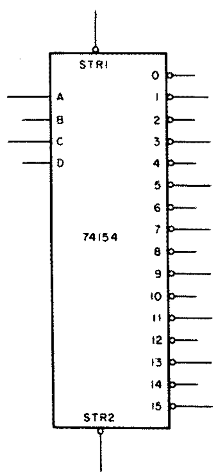

Fig. 5.

Example 1:

Verbal Description: Either input high should cause output of gate to go low.

Equation: $A + B = \overline{C} = \overline{A \cdot B} = C$

Gate Used: NOR, Fig. 1(a)

Waveforms:

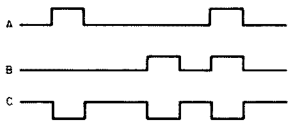

Example 2:

Verbal Description: Both inputs low "ANDed" cause the gate to go high.

Equation: $\overline{A} \cdot \overline{B} = C = \overline{A + B} = C$

Gate Used: NOR, Fig. 1(b)

Waveforms:

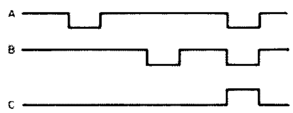

Example 3.

Verbal Description: Both inputs "ANDed" should cause the gate to go low.

Equation: $A \cdot B = \overline{C} = \overline{A + B} = C$

Gate Used: NAND, Fig. 1(c)

Waveforms:

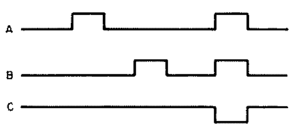

Example 4:

Verbal Description: Either input low causes the gate to go high.

Equation: $\overline{A} + \overline{B} = C = A \cdot B = \overline{C}$

Gate Used: NAND, Fig. 1(d)

Waveforms:

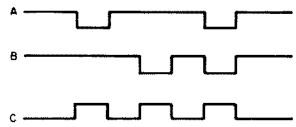

Example 5:

Verbal Description: If A and B are high and D low, or if C is high, set an R/S f-f. If A and B are high and C is low, or if D is high, reset the f-f. This f-f is activated by the "0" state on its input.

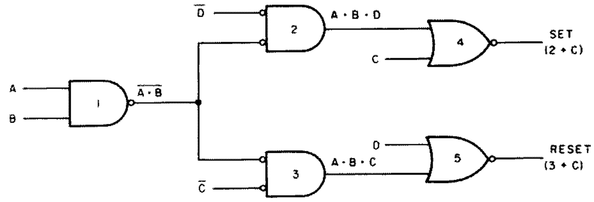

Example 6:

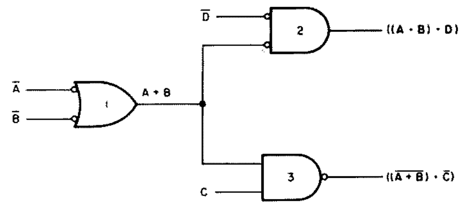

is "if both A and B are high, gate 2 will be enabled; otherwise, gate 3 is enabled." But it is clear that the two statements indicate a different thought process by the designer and hence one is the more correct. In this case, it is the former statement, and this is known due to the way that the circuit is drawn.

All flip-flops are drawn as rectangular boxes. The differences between D and JK f-fs are indicated by the labeling inside the rectangle – see Figs. 3(a) and 3(b) – and there is nothing on the clock line to indicate the direction (high to low or low to high) that the clock takes when triggering the f-f. The only indication of assertion level (circles on input) is on the asynchronous set and reset of the f-f. At the time of this writing, however, all D f-fs are positive edge-triggered and all JK f-fs are negative edge-triggered.

MSI

The Medium Scale Integration circuits are also shown as rectangular blocks, but are drawn larger due both to their large number of I/O and to distinguish them from the flip-flops. All the I/O pins are labeled internally and, unlike the flip-flops, all assertion levels are indicated – circles indicate negative assertion for both input and output. Examples of this are shown in Fig. 4, which is a 4-bit binary counter (Fairchild 9316) and in Fig. 5, which is a 4-line to 16-line demultiplexer (Texas Instruments 74154). ■

FCC

from page 185

1. The Commission has before it a Petition for Stay in Docket 21033, submitted by the American Radio Relay League, Inc. (ARRL), in accordance with Sections 1.44 and 1.429(k) of the Commission's Rules.

2. In a Notice of Inquiry and Notice of Proposed Rulemaking in Docket 21033, released January 6, 1977, 42 Fed. Reg. 2089 (1977), the Commission proposed substantial revisions of its rules concerning the licensing and operation of repeater and associated stations in the Amateur Radio Service. Final regulations, with an effective date of November 4, 1977, were adopted in a Report and Order released September 27, 1977, 42 FR 52418 (1977). Additional editorial amendments were made in an Order released October 26, 1977, mimeo 83536. Petitioner requests that the effective date of the regulations adopted in the Report and Order be stayed until 45 days after the Commission has disposed of a Petition for Reconsideration submitted by petitioner, as well as all other Petitions for Reconsideration filed with the Commission in this proceeding.

3. Petitioner states that a Stay is necessary to prevent irreparable injury to radio amateurs and the public interest. In particular, the ARRL alleges that amateurs engaging in satellite, moon bounce, and other forms of so-called "weak signal" communications will be harmed if the revisions of the repeater frequency subbands adopted in the Report and Order in Docket 21033 take effect as scheduled without additional consideration. Petitioner further claims that no one will be adversely affected by a Stay of the Docket 21033 Report and Order. Finally, petitioner states that there is a reasonable possibility that it will prevail on the merits of its Petition for Reconsideration, and that the effective date of the new rules should be stayed for that reason.

4. We believe there to be good cause (See Section 1.429(k)) for granting petitioner's request, namely, the potential for interference to amateur operations if the new regulations go into effect as scheduled. For this reason, we believe the new rules should be permitted to go into effect only after all the Petitions for Reconsideration submitted in this proceeding have been fully analyzed and considered. We will attempt to resolve the issues raised by the various Petitions for Reconsideration as quickly as possible, however.

5. Accordingly, the Commission orders that the effective dates of the regulations adopted in the Report and Order in Docket 21033 and the editorial Order of October 26, 1977 are stayed until further order of the Commission.[1] Further, in order to continue the efficient processing of other amateur radio operator and station license applications, the Commission orders a continuation of the "freeze" announced in the Report and Order in this proceeding on the filing of applications for new repeater, auxiliary link and control station licenses. Authority for this action is contained in Sections 4(i), 5(e) and 303 of the Communications Act of 1934, as amended.

FEDERAL COMMUNICATIONS COMMISSION,
WILLIAM J. TRICARICO,
Acting Secretary.

[1] We emphasize that this action also stays the effective date of the non-controversial provisions of the Report and Order in Docket 21033. For example, operators of so-called "remote base" stations may not operate their stations from portable and mobile control points until after the Commission has disposed of the Petitions for Reconsideration it has received. Additionally, Technician Class operators will not be permitted to use the new privileges authorized by the Report and Order.

Al Plavcan
P. O. Box 6173
Anaheim CA 92806

Pulses Galore!

A versatile low cost pulse generator can be made with just two ICs, a power supply, and some junk parts. Its PRF (pulse repetition frequency) can be made to operate from less than 1 Hz to over 10 MHz, with a pulse width variable from ≅50 nanoseconds to more than 500 milliseconds by adjusting only 2 components.

The device described here covers just a portion of this range. The heart of the generator is the Signetics NE562 IC. It was originally intended for use in phase locked loop synthesizers or FM demodulators. We intend to use only the VCO portion for our pulse generator, along with a 74121 monostable multivibrator to adjust the pulse width. The stability of the free-running frequency of the NE562 is comparable to more costly pulse generators.

Construction just involves stuffing the board with parts.

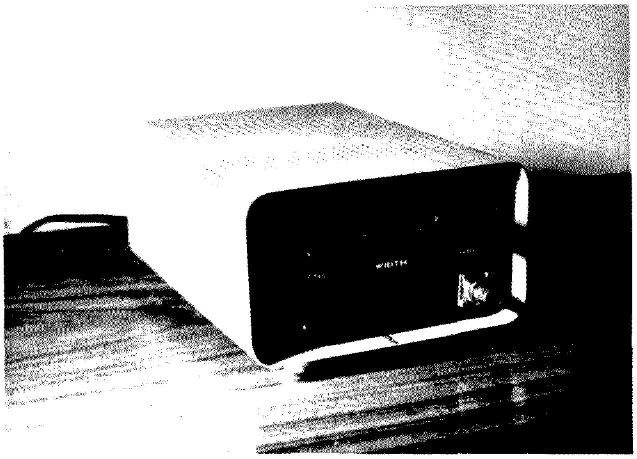

Front view of pulse generator.

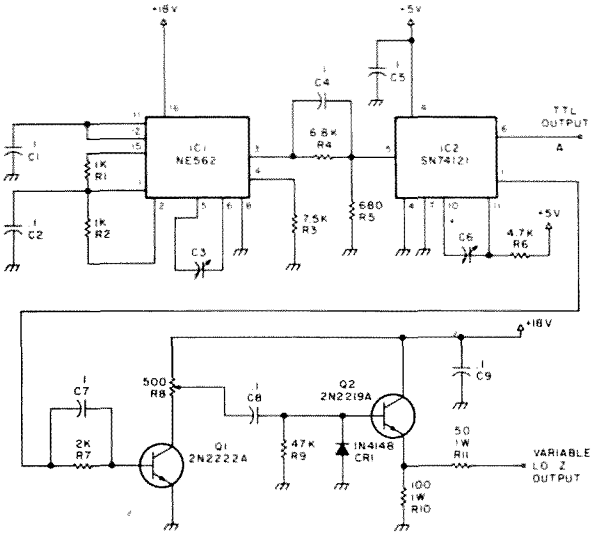

Fig. 1. Pulse generator schematic.

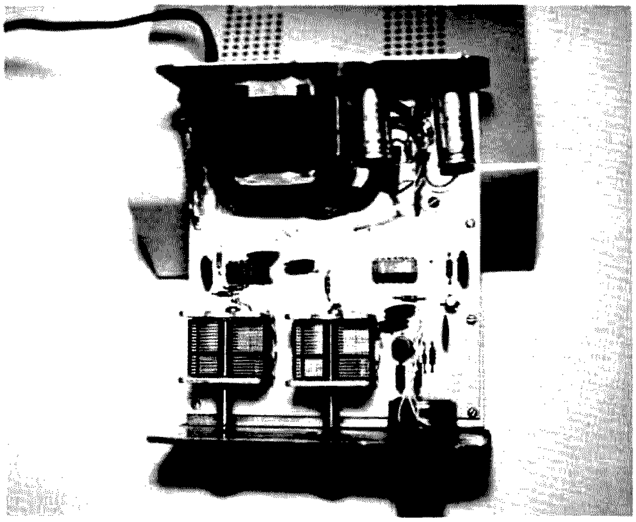

Internal view of pulse generator.

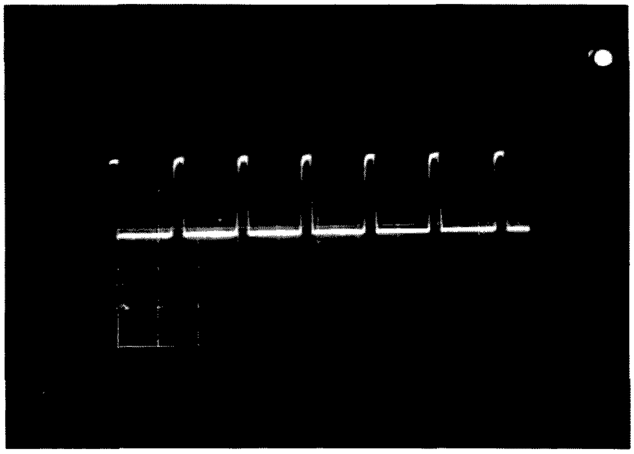

Typical output pulse: 5 V/cm vertical; .5 μsec/cm horizontal.

The two variable capacitors can be any surplus broadcast band capacitors. You can parallel the LO portion with the station tuning or switch them to provide a two range generator. The VCO will operate typically to 30 MHz, the limiting factor being the stray capacity and the minimum C of your tuning capacitor. The low end of the VCO is ≅1 Hz (C3 = 300 µF). The 74121 one-shot multivibrator also has an enormous range, from a pulse width of 40 nanoseconds to 40 seconds (C6 = 1000 µF, R6 = 40k).

One word of caution: Coupling capacitors will have to be increased as the frequency is lowered to preserve the waveshapes.

The frequency range of the device shown is from 900 kHz to 10 MHz; the pulse width is adjustable from 50 nanoseconds to ≅800 nanoseconds. You can select your frequency range of interest and change the variable Cs accordingly.

Operation

The VCO output IC1 is coupled to the one-shot IC2 through C4, R4, and R5. The output of IC2 has a TTL output (A) that has a fanout of 10. The inverted output (IC2, pin 1) is fed to Q1 base, where the output is variable to the emitter follower Q2. 1 Watt of peak power is available from this output into 50 Ohms (14 V peak unloaded). The current sinking capability is limited; however, it can be used to fire SCRs, pulse transformers, or where a larger output voltage is required, as for CMOS, etc.

To use the device, simply turn the pulse width to minimum, set the PRF, then adjust the pulse width as required. ■

Parts List

R1	1k
R2	1k
R3	7.5k
R4	6.8k
R5	680
R6	4.7k
R7	2.0k
R8	500 Ω pot
R9	47k
R10	100 Ω, 1W
R11	50 Ω 1 W
All ¼ W except as noted	
C1-C9	.1 µF disc, except C3, C6 are variables
IC1	NE562
IC2	74121
Q1	2N2222A
Q2	2N2219A
CR1	1N4148

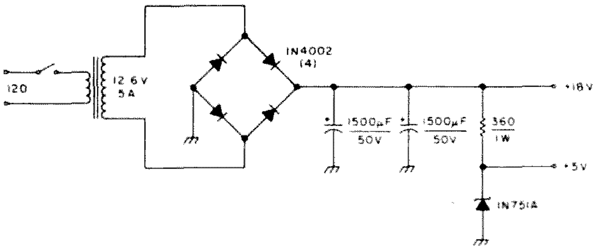

Fig. 2. Power supply.

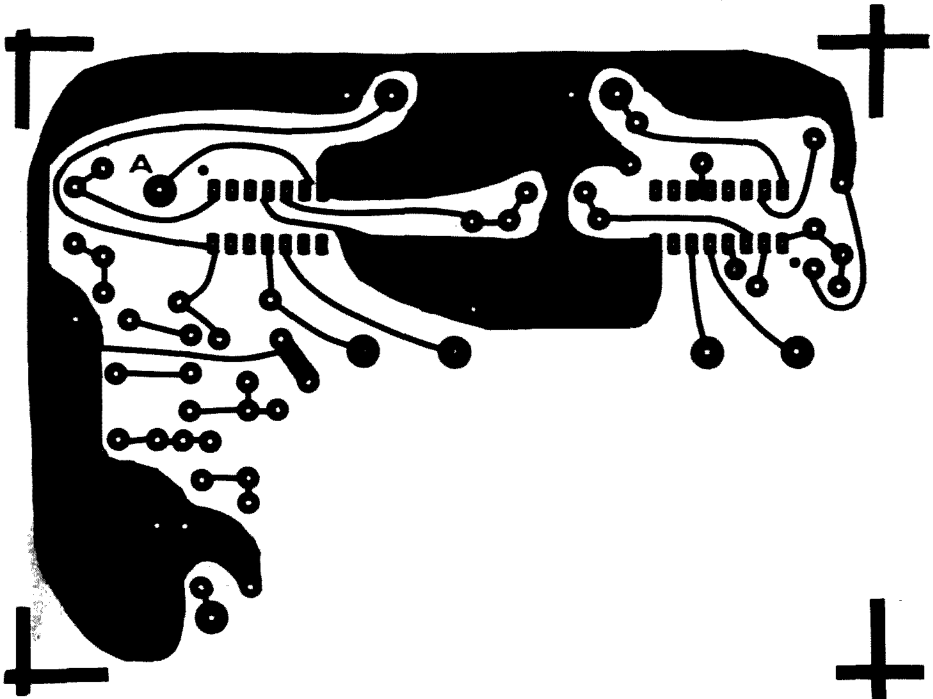

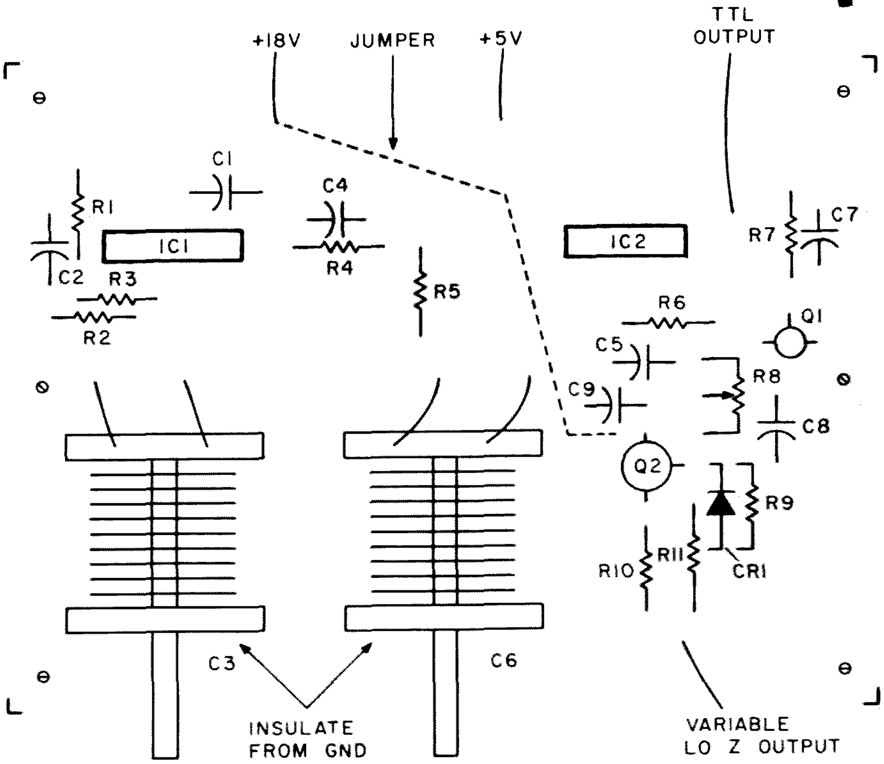

Fig. 3. Component layout.

propagation

by
J. H. Nelson

EASTERN UNITED STATES TO:

GMT:	00	02	04	06	08	10	12	14	16	18	20	22
ALASKA	14	7	7	3	3	3	3	3	7	14	14A	14
ARGENTINA	14	7	7	7	7	7	14	14	14A	14A	14	14
AUSTRALIA	14	7B	7B	7B	7	7	3A	7	14	14	14	14
CANAL ZONE	14	7	7	7	7	7	7	14	14A	21	14A	14
ENGLAND	7	3A	3A	3	3	3	7A	14A	14A	14	7	7
HAWAII	14	7B	7	3A	7	7	3	3	7B	14	14A	14A
INDIA	7	7	7B	3B	3B	3B	7	14	7B	7B	7	7
JAPAN	14	7B	7B	3A	3	3	3	7	7	3A	7	7A
MEXICO	14	7	7	7	7	7	7	14	14	14A	14A	14
PHILIPPINES	14	7B	7B	3B	3B	3	3	7	7	7B	3B	7A
PUERTO RICO	7	7	7	7	7	3	7	14	14	14	14	14
SOUTH AFRICA	7	7	7	7	7	7	14	21	21	14A	14	14
U.S.S.R.	3	3	3	3	3	3B	14	14	7A	7B	3B	3
WEST COAST	14	7	7	7	7	7	3	7	14	14A	21	14A

CENTRAL UNITED STATES TO:

GMT:	00	02	04	06	08	10	12	14	16	18	20	22
ALASKA	14	7	7	3	3	3	3	3	7	14	14A	14A
ARGENTINA	14	7A	7	7	7	7	7	14	14	14	14A	14A
AUSTRALIA	14A	14	7B	7B	7	7	3A	7	14	14	14	14[illegible]
CANAL ZONE	14	7	7	7	7	7	7	14	14	14A	21	14A
ENGLAND	7	3A	3A	3	3	3	7	14	14	14	7B	7
HAWAII	14	14	7	7	7	7	7	3	7	14	14A	14A
INDIA	7	7	7B	3B	3B	3B	3B	7	14	7	7B	7
JAPAN	14	7B	7	3A	3	3	3	3	7	3A	7	14
MEXICO	14	7	3	3	3	3	3	7	14	14	14	14
PHILIPPINES	14	7B	7B	3B	3B	3	3	3	7	7	3B	7A
PUERTO RICO	14	7	7	7	7	3	7	14	14	14A	14A	14
SOUTH AFRICA	14	7	7	7	7	3B	7B	14	14A	14	14	14
U.S.S.R.	3	3	3	3	3	3B	3B	14	14	7B	3B	3B

WESTERN UNITED STATES TO:

GMT:	00	02	04	06	08	10	12	14	16	18	20	22
ALASKA	14	7A	7	3	3	3	3	3	7	7A	14	14
ARGENTINA	14	14	7	7	7	7	7	7A	14	14	14A	14A
AUSTRALIA	14A	14A	14	7B	7	7	7	3A	7	14	14	14
CANAL ZONE	14	7A	7	7	7	7	3A	14	14	14A	21	14A
ENGLAND	7	3A	3A	3	3	3	3	7	14	14	7B	7B
HAWAII	14A	14	14	7	7	7	7	3	7	14	21	14A
INDIA	7	14	7B	3B	3B	3B	3B	3A	7	7	7B	7B
JAPAN	14A	14	7	3A	3	3	3	3A	7	7	7A	14
MEXICO	14	7	7	7	7	7	3	7	14	14	14A	14
PHILIPPINES	14A	14	7B	3B	3B	3	3	3	7	7	7B	14
PUERTO RICO	14	7	7	7	7	7	7	14	14	14A	14A	14
SOUTH AFRICA	14	7	7	3A	7	7	3B	7A	14	14	14	14
U.S.S.R.	3	3	3	3	3	3B	3B	7A	14	7B	3B	3B
EAST COAST	14	7	7	7	7	7	3	7	14	14A	21	14A

A = Next higher frequency may also be useful
B = Difficult circuit this period
F = Fair
G = Good
P = Poor

JANUARY '78

1 G	2 G	3 F	4 F	5 F	6 F	7 F
8 P	9 P	10 F	11 F	12 P	13 F	14 G
15 G	16 G	17 G	18 G	19 G	20 G	21 P
22 P	23 P	24 F	25 F	26 G	27 G	28 G
29 G	30 G	31 G				

February 1978 $2.00

73 AMATEUR RADIO

PLUS 35 More Exciting Feature Articles (see page 5)

CONTESTS

Editor:
Robert Baker WB2GFE
15 Windsor Dr.
Atco NJ 08004

ARRL DX COMPETITION
Phone
Starts: 0001 GMT Saturday, February 4
Ends: 2359 GMT Sunday, February 5
Starts: 0001 GMT Saturday, March 4
Ends: 2359 GMT Sunday, March 5
CW
Starts: 0001 GMT Saturday, February 18
Ends: 2359 GMT Sunday, February 19
Starts: 0001 GMT Saturday, March 18
Ends: 2359 GMT Sunday, March 19

These rules were taken from last year's contest. Please check the December issue of *QST* for complete rules and any last minute changes.

Briefly, the rules are as follows: All fixed station amateurs, worldwide, are invited to participate. All amateurs in the 48 states and Canada will try to work as many stations in other parts of the world as possible. All other stations will work only W/VE stations. Entries may be in either the CW or phone section; each is scored independently. Entries are further classified as single- or multiple-operator stations. Single-transmitter, multi-operator stations will be recognized as a distinct category from multi-transmitter, multi-operator stations. Two transmitters on the band at the same time are prohibited. Single-operator stations may enter in either the all band, high band, or low band categories. High band is 20, 15, and 10 meters, while low band is 160, 80, and 40 meters. Operating on a band not allowed in your class is permitted, but those points will not be counted toward your total score. Crossband and crossmode contacts are not allowed.

EXCHANGE:

W/VE stations will send RS(T) and state or province. All others send RS(T) and power. KH6 and KL7 are considered DX.

SCORING:

Score 3 points for each completed QSO. Each station may be worked once on each band on each mode for contact and multiplier credit. Final score is the total number of QSO points times the total number of countries on each band (for W/VE stations), or the total number of continental states plus VE/VO licensing areas worked on each band (for OX).

AWARDS:

A plaque will be awarded to the highest single operator DX phone and CW station (non-W/VE) in each continent. On both phone and CW, a certificate will be awarded to the highest scoring station in each category and classification in KL7, KH6, each ARRL section, and each country where a valid entry is received. Also, a certificate will be awarded to each non-country winner DX entrant making 1000 or more OSOs on either mode. ARRL-affiliated clubs may also participate in club competition as described in *QST*.

LOGS:

A summary sheet, log sheets, and DX check-off sheet for each band used is required for all W/VE entries. DX entries must submit log sheets and a summary sheet. Separate logs, summaries, and check sheets are required for each mode used from all entries (no check sheets for DX). Logs and forms are available from: ARRL, 225 Main St., Newington CT 06111.

ARRL NOVICE ROUNDUP
Starts: 0001 GMT Saturday, February 4
Ends: 2359 GMT Sunday, February 12

The contest is open to all amateurs in any ARRL section. Operating time must not exceed 30 hours total during the 9 day period, while off periods may not be less than 15 minutes at a time. Times on and off must be entered in your log. Crossband contacts are not allowed. Novices may work anyone, while non-Novices must work Novices only. Each station may be worked only once regardless of band.

EXCHANGE:

RST and ARRL section.

SCORING:

Each completed QSO counts one point. The total multiplier is the number of ARRL sections and foreign countries worked. VE8 counts as a separate section. The final score is the number of QSO points plus your ARRL code proficiency credit (15 wpm = 15 pts.) times the total multiplier.

AWARDS:

Certificates will be awarded to the highest scoring Novice in each ARRL section. Multi-operator or high class licenses are not eligible for awards, but the top ten scores will be listed in the results.

LOGS:

Use official ARRL forms available from: ARRL, 225 Main St., Newington CT 06111. All entries should be sent to this same address.

Please check the January issue of QST *for any last minute changes in rules or operating times.*

QCWA QSO Party
Starts: 2400 GMT Friday, February 10
Ends: 2400 GMT Sunday, February 12

Points based on number of QCWA members contacted multiplied by the total number of chapters contacted. Contest open to members only. Samole log and complete rules included in

Continued on page 23

CALENDAR

Feb 4-5	ARRL DX Contest — Phone
Feb 4-12	ARRL Novice Roundup
Feb 10-12	QCWA QSO Party
Feb 11-12	10-10 Intamational Nat Wintar QSO Party
Feb 18-19	ARRL DX Contast — CW
Feb 25-26	French Contest — Phona
Mar 4-5	ARRL DX Contest — Phone
Mar 18-19	ARRL DX Contast — CW
Mar 25	BARTG Spring RTTY Contest
Apr 1-2	TENN QSO Party
Apr 1-3	ORP QSO Party
Apr 8-9	Open ARRL CO Party — CW
Apr 15-16	Open ARRL CD Party — Phone
Apr 22-23	Zero District QSO Party
June 3-4	IARS/CHC/FHC/HTH QSO Party
June 10-11	ARRL VHF QSO Party
June 24-25	ARRL Field Day
June 24-25	First REF Tan Day
July 4	ARRL Straight Key Night
July 8-9	IARU Radiosport Competition
Sept 9-10	ARRL VHF QSO Party
Oct 14-15	ARRL CD Party — CW
Oct 21-22	ARRL CD Party — Phona
Nov 4-5	ARRL Sweepstakes — CW
Nov 18-19	ARRL Sweepstakes — Phone
Nov 18-19	Second REF Ten Day
Dec 2-3	ARRL 160 Meter Contest
Dec 9-10	ARRL 10 Meter Contest

RESULTS

RESULTS OF 1977 WASHINGTON STATE QSO PARTY

Top 10 out-of-state scorers:

N6MU	Calif	10,944 points
K9BG	Ill	6,840
W7ZMD	Ariz	5,684
WB2VWW	NJ	5,096
K6XO	Calif	4,872
K9WA	Ill	4,648
VE4RF	Manitoba	4,032
WB9EVO	S Dak	3,942
KL7IUN	Alaska	3,888
N9AW	Wisc	3,872

Top 10 Washington state scorers:

VE7ZZ/W7	Clark county	260,952 points
W7VRQ	Whatcom	238,422
N7GM	Walla Walla	211,442
K7SS + K7RA	King	109,872
WA7GVM	Skagit	103,896
N7AM	Kitsap	60,156
K7LFY/7	Mason	58,688
WA7YCZ	Whatcom	55,440
WB7BFK	Island	45,312
K7NF/7	Jefferson	37,000

Special nota: W7GHT operatad mobile from 24 different counties during the contest period, baing the only station entering from 15 of the 24 counties!

Looking West

Bill Pasternak WA6ITF
24854-C Newhall Ave.
Newhall CA 91321

I'd like to introduce a new friend to you – John Zell WA6AEH. John is a very special person to me and others because of something he has just completed. No, not a new DX championship or anything like that. John has just released his first record album, titled "My Tribute – Thank You, Lord."

For the past ten years, John has been solo trumpet player for a rather well-known orchestra, that of Lawrence Welk. Many of you probably have seen John on TV hundreds of times. He is the young-looking fellow in the extreme left of the orchestra's trumpet section. However, I guess that very few, if any, of you knew that John was also an active amateur operating both low bands and VHF FM. Those of us who have come to know John on a personal level, to have him as a friend, consider ourselves honored – not because of his celebrity status, but because in John one finds the epitome of a good human being, a person who possesses true love for all mankind.

Listening to John play, especially solo, this love of all people shines through. You can actually feel it. His new album on Manna Records (MS-2053) is of Christian music. It's an album he has dedicated to his belief in God and in his fellow man. I am not a Christian, yet the feeling of love and joy that surrounds me each time I play this album is almost overwhelming. I feel happy listening, and I know of no greater gift that any man can give others than sharing happiness. Therefore, we dedicate this month's "Looking West" to John Zell WA6AEH and the joy of his music. Ham radio needs more like John.

John Zell WA6AEH with his boss, Lawrence Welk.

THE "WHERE DO WE GO FROM HERE" DEPARTMENT

I'd be lying if I said that I was upset over the Commission's last minute decision to "stay" implementation of the Report and Order on Docket 21033. I've probably spent way too much time on this topic already, but, as you are well aware, the stay places this whole matter in a new light. It gives us time to reassess our needs and values, to reach for better alternatives. In my just-filed reply comments, I may have stumbled across a few. For your consideration, here they are.

Yes, I suggested that the Commission open 144.5 through 145.5 MHz to relay activity, but that it not permit FM repeaters to utilize this spectrum. Rather, I suggested that the FCC approve only relay systems that meet the criteria of already existing narrowband spectral activity, such entities as SSB repeaters and linear translators. In this way, new frontiers of technological growth can be fostered while the rights of all spectrum users are retained. I requested the same for 220 as well. I also requested that the FCC open the entire six meter band, 50 through 54 MHz, to amateur relay activity as an alternative to expansion of either two or 220. It's my feeling that we must populate six or lose it. I prefer a large amateur population.

As I have stated herein before, I want to see "WR" special repeater callsigns retained. Suppose all amateurs could put up a repeater whether such systems were needed or not. They have the money to buy the machine and an ego that says "go do it." Ah . . . but there is no space for their new "ego box." So, they plop down atop existing activity and begin wreaking havoc on amateur society. Finally, after everything else has been tried to no avail, the local coordinator seeks a "show cause/cease and desist order" from the FCC. Does the machine go away? No. It simply changes callsign and the whole process begins again. The "bad guy" simply transfers ownership of the repeater system to a friend. The way the Report and Order presents itself, that probably would happen more times than not. Eventually, if things got far enough out of hand, one of two things might happen. For sure, the Commission would probably return to a very strict filing system before any amateur could place a repeater in operation, or even continue to operate one now in operation. Remember, the FCC always tends to overreact to most situations. The other alternative might be to require "mandatory" channel coordination prior to issuance of a repeater callsign. At present, coordination is not required by the Commission, but all amateurs of good will do avail themselves of local voluntary coordinators and councils to minimize potential conflicts with others. Right now it's voluntary, but if things went wrong in repeater deregulation, the reaction might find us all having to go to the FCC itself to get a repeater pair. That is, if they felt our proposed system had merit! I'd rather deal with my amateur peer group than a federal bureaucracy. I suspect that you would, too.

Therefore, I requested (again) that special WR prefixes and specific licensing of all repeater stations be retained. I additionally asked that they make the remote/base concept of operation inherent in each amateur's license as a method of stimulating individual and collective experimentation into the frontiers of relay communication not yet explored. An inherent remote/base privilege, along with separate recognition and minimal regulation of such by the Commission, will be a stimulus to technological growth.

There's more – more that will probably make me somewhat unpopular with the die-hard "FM Repeaters Forever" crowd. However, as has been stated before, this world is made of people, not black boxes on hilltops. If I have to make a choice, my vote goes with the long-established concept of the "human being" every time. We have a chance to reassess our needs and values, to make more efficient use of what we now have, and to show that we place the value of any one single human being far above any machine. If we use this chance, we will all be the better for it.

The current state of affairs does place coordinators and councils in a rather awkward position. Many coordination entities acted fast, possibly too fast, in divvying up the "newfound wealth," only to find themselves standing with a bit of egg on their faces when the news of the stay hit. In other places, like Texas and here in Southern California, the councils had taken a "wait and see, let's not jump in head first" attitude. The question that we and others would face on "deregulation day" would be, "What would happen?" Would there be an uncoordinated land rush to grab what could be grabbed, or would things continue on as if nothing happened?

At about 10 am on "Repeater Deregulation Day, '77," I began to SWL the new spectrum from the two-way radio store belonging to a friend of mine. I had at my disposal virtually any radio I needed. I chose an Icom 211 for SSB monitoring and a Midland 13-510 for listening to FM. The reason for the choice of equipment was the proximity of one radio to the other (they were sitting next to each other).

The results were quite interesting. I soon realized that I was not the only person involved in this SWL activity. I came across a number of AM QSOs and the tone of most of the conversations overheard was not very friendly to FM or repeaters. In fact, I had the distinct feeling that the AM crowd had assembled to "wage war" on anything that even remotely sounded like a repeater. On SSB, I found little activity during my entire six-hour stint as a VHF SWL. SSB is very heavy in the evenings in the spectrum between 144.950 and 145.230, but is fairly dead the rest of the day. The one SSB QSO I came across on 145.100 was involved in a discussion of the same topic, but along different lines. It dealt with possible legal action to stop the implementation, a discussion that I understand had been going on in SSB circles for weeks. It was very obvious that neither local AM nor SSB interests were all that happy with the deregulation and with the expected mass influx of repeaters.

By noon, I had logged seven signals that were obvious relay devices; only one, though, was an obvious local. The rest could have been anyplace within maybe a hundred miles. Only one had an ID, and later checks showed this to be out of the area administered by SCRA. In total, by the time I left my friend's shop, I had logged eleven obvious relay devices, but could not identify the location of most. The antenna used was an omni-type, as I was interested in logging total numbers rather than location. Also, I was a guest in someone's place of business and had to keep a low profile to remain welcome. No confrontations between FM repeaters and other modes had developed, at least none that I was witness to.

Continued on page 26

Marc I. Leavey, M.D. WA3AJR
4006 Winlee Road
Randallstown MD 21133

Inexpensive EKG Encoder

WARNING: Use or sale of this or similar devices is restricted under Federal Law to physicians or on their orders. No attempt should be made to diagnose or treat patients without trained medical supervision.

Amateur radio has long been known for its service to those in need. One of the outstanding accomplishments of our hobby has been the remote handling of medical emergencies. This service has normally entailed transmission of detailed history and physical findings which, when relayed to a physician with key laboratory information, can effect a diagnosis. Now, however, greater emphasis is being placed on transmission of hard patient data. The electrocardiogram (EKG) is just such a piece of data. EKGs have been relayed over HF links and even through OSCAR to monitoring physicians. The encoder used in transmitting EKGs costs several hundred dollars when obtained commercially. This article will explain the derivation of the EKG and will present an encoder which can be constructed for less than forty dollars.

The EKG (or ECG, as it is sometimes called) is a representation of the total electrical activity in the heart during the cardiac cycle. Fig. 1 diagrams the basic anatomy of the heart. The two atria and two ventricles form a pump which has two separate, although related, fluid paths. Blood from the body enters the heart through the great veins, the superior and inferior vena cavae. It traverses the right atrium, goes through the tricuspid valve, and enters the right ventricle. The blood is pumped out of the right ventricle, through the pulmonic valve, to the pulmonary artery. It is then sent to the lungs, where carbon dioxide waste is discharged and fresh oxygen is obtained. The blood reenters the heart through the pulmonary vein, going this time to the *left* atrium. Then, through the mitral valve, the blood enters the left ventricle, from which it is pumped out, over the aortic valve, to the aorta, where

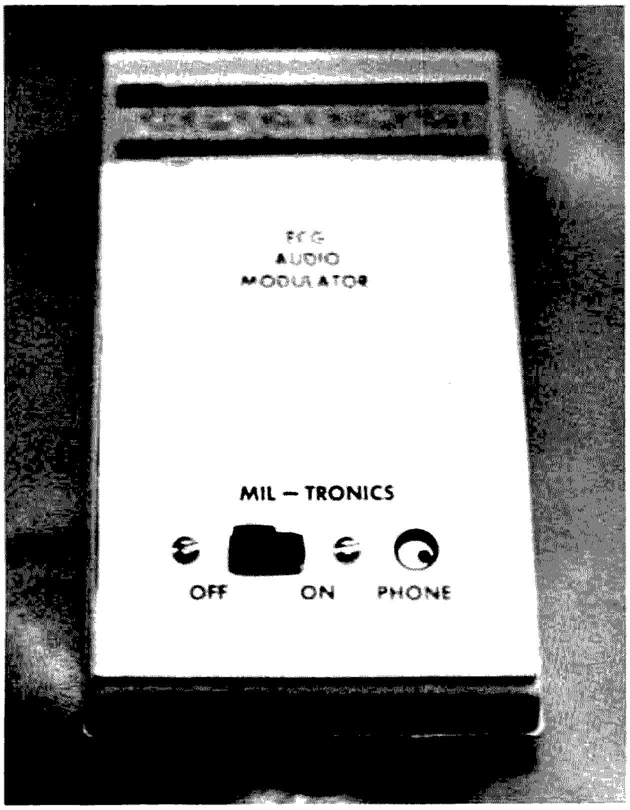

Overall view of completed unit.

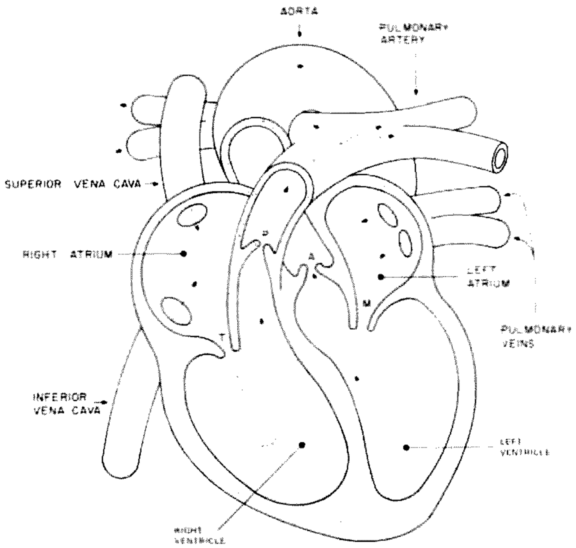

Fig. 1. Anatomy of the heart. M = mitral valve; T = tricuspid valve; P = pulmonic valve; A = aortic valve. Blood flow is in the direction of the dotted arrows.

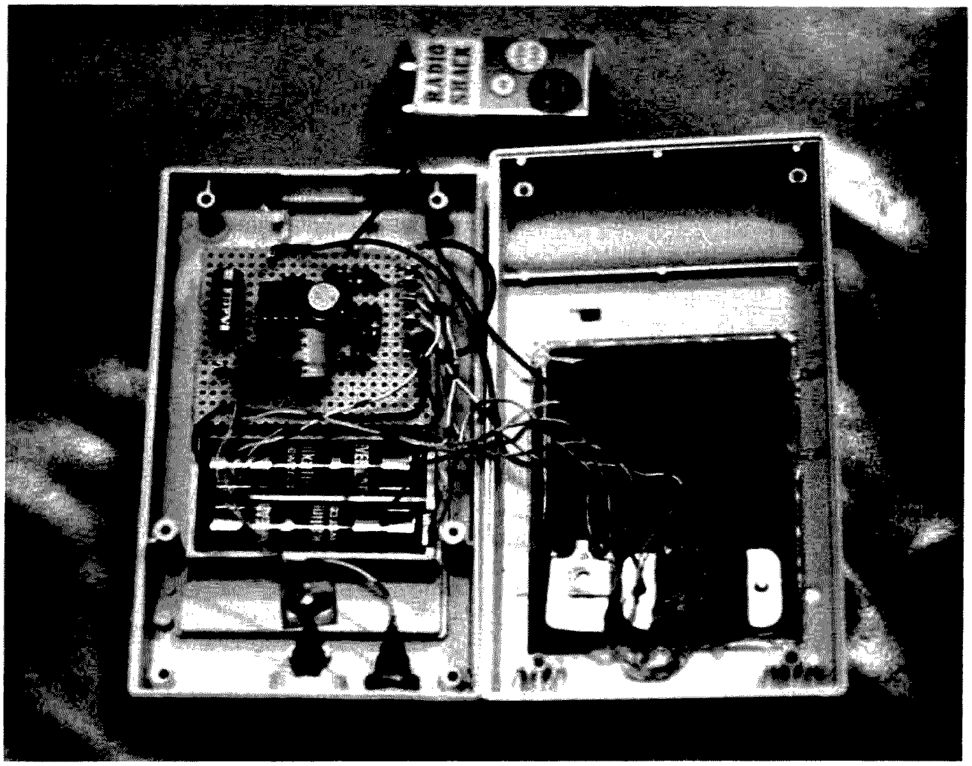

Internal view of completed unit. Note the 3PDT slide switch used to switch all three batteries and the small, square surplus speaker.

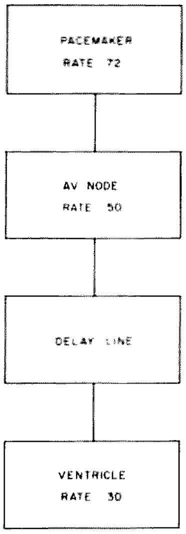

Fig. 3. Conduction pathway.

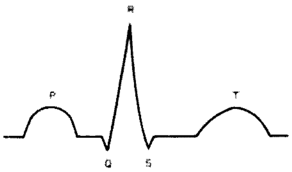

Fig. 4. Normal electrocardiogram.

distribution to the body originates.

But . . . how does it work? It is easy to explain why blood flows in the direction it does: All the valves are one way! The muscle contracts because of electrical excitation, and that's how we are going to get an EKG.

Take a look at Fig. 2. I have superimposed the conduction system of the heart on the anatomy of Fig. 1. This system, by the way, is anatomically demonstrable, not just the figment of some physiologist's mind. Impulses originate in the heart's pacemaker, a cluster of cells located high on the right atrium. Activity is transmitted along the atria until it reaches the AV (atrio-ventricular) node, where a brief delay is experienced. Impulses are then sent out again, first over a common Bundle of His (rhymes with bliss) and then over the right and left bundles. It is important to note that, although the pacemaker normally controls the rate of the heart, failing that, other lower sources can take over the rhythm. An analogy to an electronic circuit may help to clarify this.

Fig. 3 shows such an analogy. The pacemaker is represented by an astable multivibrator with a rate of 72/minute. This is directly connected to another astable with a rate of 50/minute. It then goes through a delay line to a final astable with a rate of 30/minute. *The fastest operating astable will normally control the system.* Neat, huh?

As each of these impulses is being propagated in one direction, a voltmeter connected across the heart will show a potential difference, varying with the stage of depolarization. Because it is difficult, in a living individual, to hook test leads directly to the heart, we can use the arms as convenient probes. Sweeping the voltage through time produces the tracing shown in Fig. 4. By changing the position of the leads, as by using combinations of arms and legs, different waveforms may be obtained. This is due to vector differences in the depolarization and is beyond the scope of this article. However, all have basic elements in common. The first deflection is the P wave, denoting atrial depolarization. The PR seg-

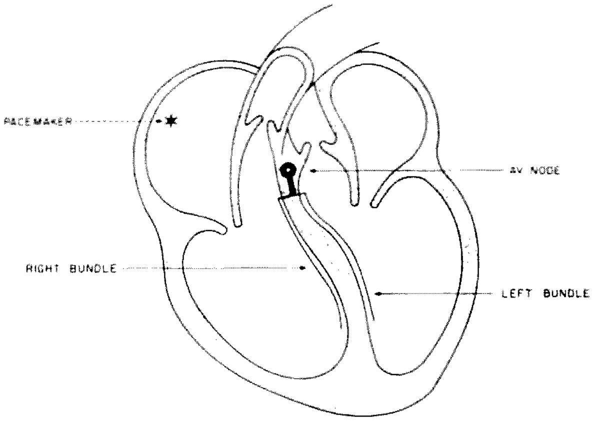

Fig. 2. Conduction system.

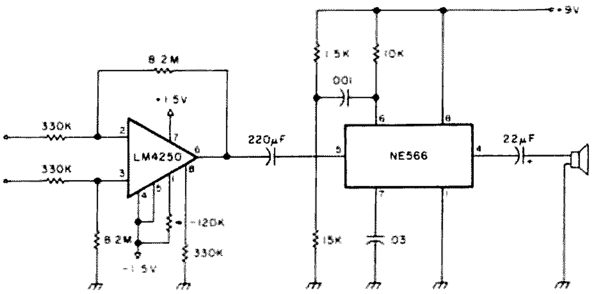

Fig. 5. Schematic diagram.

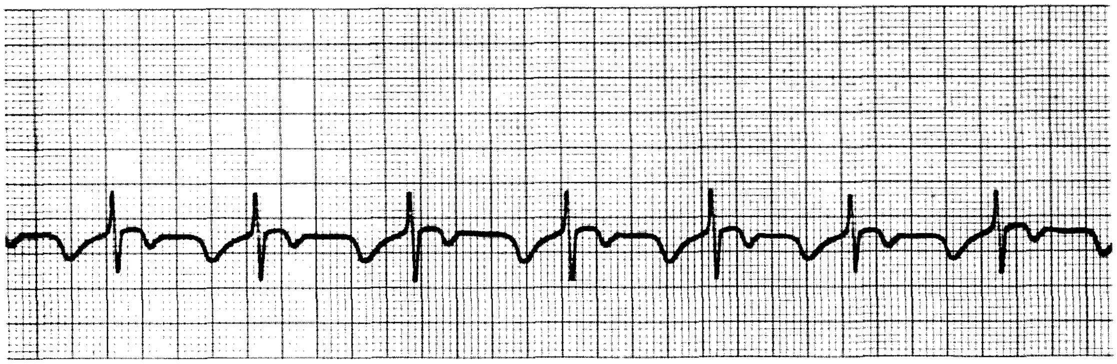

Fig. 6. Typical transmitted EKG.

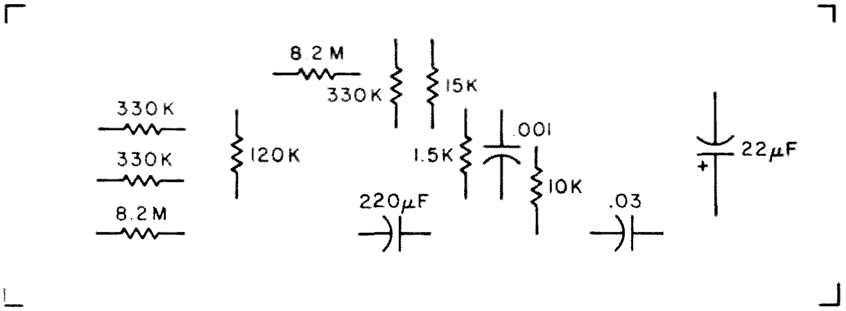

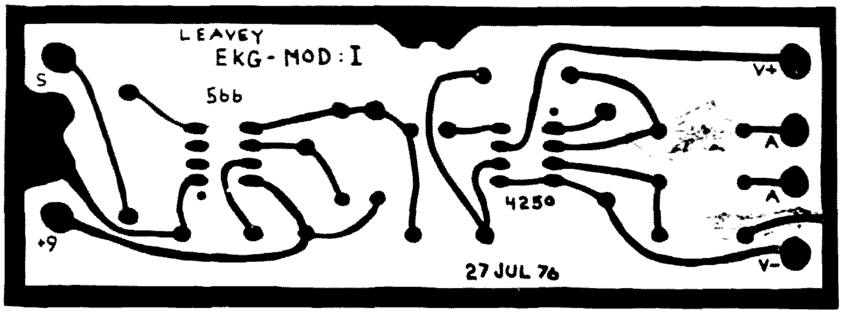

Fig. 7. Printed circuit parts layout.

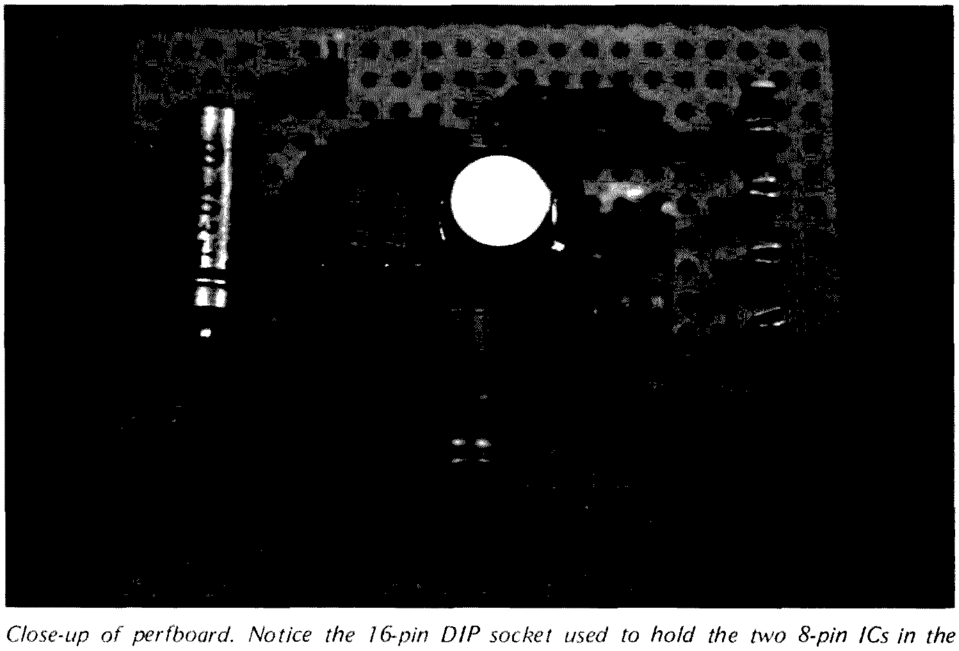

Close-up of perfboard. Notice the 16-pin DIP socket used to hold the two 8-pin ICs in the prototype. The PC layout uses two separate sockets.

ment demarcates the "delay line" of the AV node. The large QRS complex represents ventricular depolarization and the subsequent T-wave restitution of the electrical energy, or repolarization. Again, changes in shape, amplitude, or timing, as well as the presence or absence of certain elements, are critical to interpretation and utilization of the EKG. But such is the stuff of which books are written and is far too much to even summarize here.

The EKG, then, represents a tiny voltage change directed across the heart. To record this change, a differential amplifier with high gain is connected across the chest, and the output is fed to a strip recorder. To transmit this data over telephone or radio links, the changing voltage is converted to AFSK, which can be transmitted by conventional means. Decoding the AFSK through use of a PLL is fairly straightforward, but it is not the subject of this article, so it will not be covered here.

Commercial EKG encoders are available and are in wide use in the medical community. They cost upwards of $300. For about one-tenth of that, this unit can be constructed for demonstration or educational purposes.

I must stress that, while a device such as this may be built for individual experimentation or education, sale or use of it in actual patient care is restricted under Federal Medical Device legislation. Readers who are

physicians are welcome to offer evaluations and comments.

The EKG from the patient is fed to an LM-4250 programmable op amp. After amplification, the EKG signal is used to modulate a vco, formed by a 566 IC. Output is coupled directly from the 566 to a small speaker and may be acoustically fed to a mike or telephone handset.

The schematic is shown in Fig. 5. Notice that two power supplies are required — a +9-volt supply for the vco and a ±1.5-volt supply for the op amp. In the prototype, these are provided by a standard 9-volt transistor battery and two 1.5-volt AA cells. Connection to the patient may be through standard adhesive monitoring electrodes or, in their absence, small discs (about 1 to 2 cm^2) of metal, held to the wrists with rubber bands or watchbands. A saline solution should be put under each disc to lower resistance.

The prototype was constructed in a calculator case, available at low cost through several sources. The only necessary control, an ON-OFF switch, is mounted on the front panel. Pin jacks are provided for the patient cables. A printed circuit board layout is shown for those who might wish to duplicate this construction.

To use this, connect the patient cables to electrodes on each wrist, and turn the unit on. The tone, after stabilizing, will be heard to shift frequency with each pulse beat. The shift may be up or down, depending upon the orientation of the leads; reversal will invert the output. When fed to a suitable decoder, strip-recorded EKGs may be obtained. These can be interpreted to aid in the management of patients.

There you have it — one-half of a telemetry system! Any comments or questions are welcome, but please include an SASE. ■

CONTESTS

from page 16

December issue of *OCWA News*. This year's contest is sponsored by the Northern NJ Chapter. Logs to be checked must be in the hands of the contest committee by March 4.

TEN-TEN NET WINTER QSO PARTY

Starts: 0000 GMT Saturday, February 11
Ends: 2400 GMT Sunday, February 12

The contest is sponsored by the Ten-Ten International Net of Southern California, Inc., and is open to all amateurs, but only 10-10 members are eligible for awards. All contacts must be made on 10 meters, any mode, and a station may be counted only once.

EXCHANGE:

Name, QTH, and 10-10 number.

SCORING:

1 point for each contact plus 1 point if with a 10-10 member. Maximum of 2 points for any one contact.

LOGS:

Logs should include date and time of each contact as well as the required exchange information.

AWARDS (for 10-10 members only):

Certificates to first and second place winners in each US district, Alaska, Hawaii; each VE district; Central America and Caribbean; South America; Europe; Africa and South Atlantic; Asia and Northern Pacific; Australia, New Zealand, and South Pacific. Send logs to: Grace Dunlap K5MRU, Box 445, La Feria TX 78559, by March 31. For complete results, see the *10-10 Net Summer Bulletin*.

FIRST U.S. SSTV CONTEST

You've surely noticed the increasing amount of slow scan TV activity on our high frequency bands during recent months. This mode of communication has obviously reached the level of warranting a U.S. sponsored SSTV contest, so we're initiating such a competition March 4-5, 1978, and early each March thereafter. The period of early March was selected because it doesn't appear to conflict with other contest activities.

Plans for this contest began forming late last year. The enthusiasm exhibited by SSTVers was overwhelming, so we decided to conduct the first contest during 1978. Apologies for the brief notice. If you've been operating SSTV recently or keeping track of the SSTV Net (14.230 kHz, Saturdays, 1800 GMT), however, you've been hearing of this contest for several months.

As this announcement is being written, plans are also being made for at least one trophy, which will be awarded to a high scoring contester. Formal presentation of this award will be conducted at the Dayton Hamvention in April.

In order for any contest to be dubbed successful, a substantial number of entry logs must be recorded. *Your* log is vitally important, regardless of its size or score. We're presently considering such tactics as random-selecting a log and awarding a prize to that person, so send in that log! Photos will also be ogled and published with the contest results in *73*. Published photos will be paid for at regular rates.

The purpose of this contest is twofold: to prove SSTV acceptance and to have some true fun on the air during the cold winter. Contest hours were thus arranged for one's comfort rather than one's endurance. You'll also have weekend time for family chores — and sleep.

I would like to emphasize checking OSCAR orbits which may be used for your area, and giving mode A (2 meters to 10 meters) a try during the appropriate times. When using the satellite(s), however, establish contact via SS8 before briefly exchanging pictures to avoid unnecessary loading of the transponder. I, for one, will be enthusiastically looking for SSTV contacts via satellite (W1JKF and I, however, will not be competing for awards, as we are contest sponsors).

All aspects considered, the contest should be a real blast. We'll be looking forward to seeing all of you then.

Dave Ingram K4TWJ
Brooks Kendall W1JKF

SSTV CONTEST
Saturday, March 4

Continued on page 129

RESULTS

RESULTS OF THE 1977 CAN-AM CONTEST

Trophy Winners:

Canadian Champion Trophy — Lee Sawkins CY7CC
American Champion Trophy — Gary Coldwell WA6VEF
Canadian Phone Trophy — Sid Kemp VA7BGK
American Phone Trophy — Alan Brubaker K6XO
Canadian CW Trophy — Jim Bearman VE5DX
American CW Trophy — Fred Minnis KØMM
Multi-Operator Trophy — University of Manitoba ARC VC9UM
Special Plaque (Multi-Op Champion) — Yuri Blanarovich VE3BMV
Club Competition Plaque — Toronto DX Club

Top Ten Combined:		*Top Ten: Phone:*	*CW:*
VE — Single-Op		*VE*	*VE*
CY7CC	1,008,527	CY7CC	CY7CC
VA7BGK	570,222	VA7BGK	VE5DX
CY3EDC	382,566	VE7UA	CY3EDC
VE3KZ	356,150	CY4SW	VE3KZ
VE5UA	350,106	CY3BBH	VE3IR
CY4SW	308,716	VE3KZ	VE2HY
VE5DX	288,982	VE6MP	VE7AV
CY3BBH	222,219	VE7AV	CY1AGP
VE7AV	210,697	VE8RO/6	VE7DSA
VE6MP	194,186	VE3MR	VE2YU
VE-W Multi-Op		*W*	*W*
VE3BMV	822,527	WA6VEF	WA6VEF
VC9UM	628,385	K6XO	KØMM
W8LT	242,834	N4UF	K4BAI
VE2BPT	194,680	KØMM	K5NW
WA3UKY	192,199	WA6NEL	N6MU
CY1NN	180,351	W6OKK	K1ZZ
VE1AWN	145,262	K8MR	W5JW
W4NVU	124,212	WBØPYD	N5CT
N4UF	74,470	WDØBRJ	W2SC
VE8ML	72,312	WA4NTP	W6BIP
W — Single-Op		*Multi*	*Multi*
WA6VEF	695,756	VE3BMV	VE3BMV
KØMM	303,871	VC9UM	VC9UM
K4BAI	189,230	CY1NN	VE2BPT
K6XO	187,293	VE1AWN	W8LT
K5NW	165,447	W8LT	WA3UKY
N6MU	159,619	WA3UKY	N4UF
W5JW	149,030	W4NVU	WD8KDR
K1ZZ	144,508	VE8ML	W4NVU
N4UF	132,209	W9WI	CY1NN
W6OKK	130,475	WB3GPR	

What Are They Showing On SSTV?

—have you been missing something?

Dave Ingram K4TWJ
Eastwood Village
#1201 So.
Rt. 11, Box 499
Birmingham AL 35201

During the first years of SSTV, most picture transmissions were comprised of lettered information and simple sketches. Commercially-manufactured equipment was not available, thus all slow scanners used home brew monitors and scanning devices. Pictures received from the few amateurs using home brew SSTV cameras were often individually characterized by blemishes created from their TV stations — pullout vidicons or plumbicons.

Then came the advent of commercially-manufactured SSTV gear, and situations changed immensely. A large number of amateurs began operating SSTV and acquiring their first views of distant contacts. Technical advancements were extensive during this particular period, and SSTV soon proved its capability as a worldwide communications tool. Many of these SSTV advancements have appeared in various amateur publications, and several more innovations are presently approaching completion. Next year, for example, projected SSTV expansions will include full color, motion, computer-reprocessed, high-resolution pictures with accompanying audio, and much more. Practically all slow scanners will be able to home modify their equipment to include these features. The cost will be approximately two hundred dollars. Naturally, we slow scanners are proud of such technical and operational accomplishments.

As most of the published articles on slow scan TV have been technically related, the casual reader is seldom exposed to the "operations," or fun, side of SSTV. This article will attempt to fill that void and exemplify how SSTV is expanding horizons as we increase our knowledge and share our personal interest with others. We hope you enjoy the views and may soon consider joining our ranks. The accompanying pictures illustrate a typical one or two evening's SSTV activity in the "1977 style." Keep in mind that photographs of TV pictures usually

Photo 1. W5DUU.

Photo 2. W6KZL.

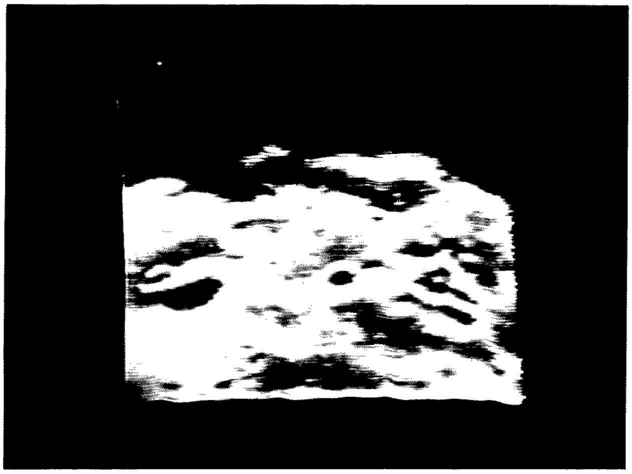

Photo 3. N6V.

Photo 4. XE2JOF.

reproduce somewhat differently than when originally viewed because of variables like camera f-stops, monitor dot intensity, etc. Also, a certain amount of definition is lost each time a picture is reproduced. These pictures were produced four times for this article. They will have a more authentic slow scan appearance if they are viewed at arm's length.

Photo 1 was received from Dave W5DUU, an accomplished optical surgeon, as he described one of the highly-specialized eye operations he performs. This operation, which corrects glaucoma or cataracts of the eye, consists of surgically opening the eye from the 9 o'clock to the 2 o'clock position, removing the affected tissue, and slipping a corrective lens into the eye. The lens is then moved into position over the pupil and iris, and the eye is resealed. SSTV Photo 1 shows such an eye, with the lens in place and a dark pointer indicating where the initial incision to the eye is made. This highly critical and delicate operation is performed under a microscope. Dave relates that some of the medical concepts of this operation were acquired during World War II, when airline pilots crashed and windshield particles penetrated their eyes.

Photo 2 is an SSTVer's view of Glen W6KZL holding one of his 3½-pound radishes. In addition to being an avid DXer and SSTVer, Glen also enjoys growing large plants and vegetables in his two hydroponic greenhouses. Each greenhouse includes two 9-foot by 8-foot growing trays, plus complete air-conditioning systems. The trays are filled with fertilizer-enriched water and gravel. Plants thrive on the specially-formulated water, while wrapping their roots around the gravel for support. Among the other homegrown vegetables Glen has shown on SSTV are 22-inch cucumbers and 16-ounce tomatoes. Yes, they are quite edible, and they grow year round in the greenhouses. Hopefully, we'll soon get Glen to show more pictures from inside his greenhouses.

Photo 3 is an SSTV scene of Phobos, the second moon of Mars. This classic picture was originally received at the Jet Propulsion Labs in Pasadena, California, and then retransmitted to SSTVers around the world by their club station N6V (the regular club call is W6VIO; N6V was issued for this special event). JPL's assignment was the tracking, data acquisition, and mission control of Viking 6. This picture was received at JPL as the Viking spacecraft passed within 500 miles of Phobos while enroute to Mars. Picture aspect is 5.6 miles wide by 5 miles high and represents the most detailed view ever acquired of this small roughly-cratered moon. The large crater on the left side of Phobos is approximately .8 miles across. Shadows on Phobos are highly defined when com-

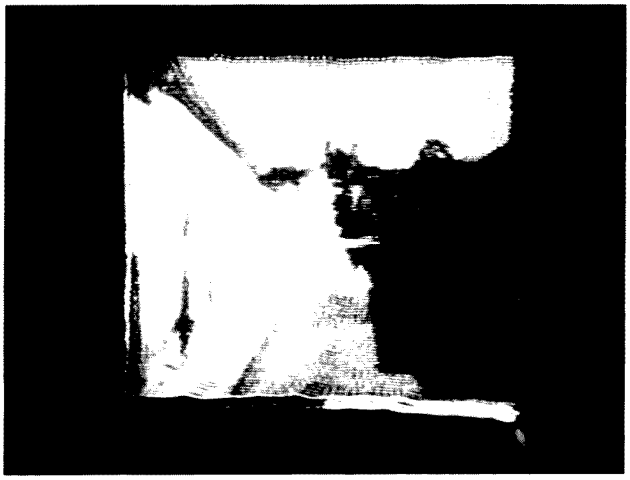

Photo 5. XE2JOF.

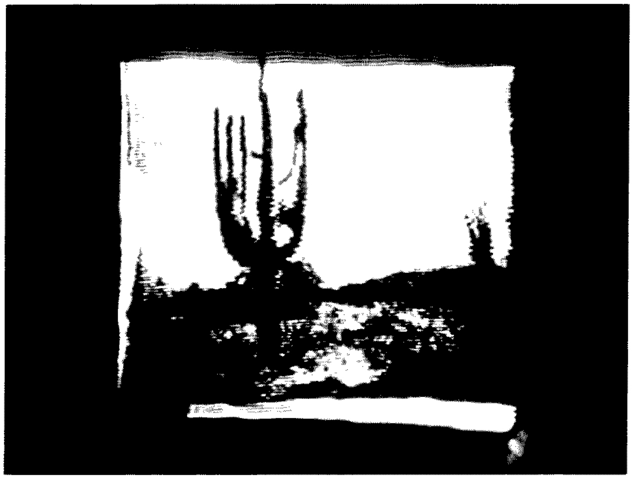

Photo 6. N7TV.

Photo 7. W1BGW.

pared with shadows on Mars, due to the different atmospheres.

SSTVers viewed this picture and many similar Mars pictures before commercial news media received them. Many times during this historical event, SSTVers provided news media with similar ringside-seat views of Mars which were relayed by N6V. During 1978, N6V also plans to provide SSTV coverage of the flyby views of Jupiter and Saturn. During the 1980s, N6V, or W6VIO, will also provide SSTV coverage of the Jupiter orbit and atmospheric probe which is scheduled to be launched along with our space shuttle.

Photo 4 was received from Sergio XE2JOF in Mexico City as he briefly described some of the unusual sights near his area. These giant idols are somewhat similar to the idols found on Easter Island, and they bear the same mysterious legends of origination. (This picture was initially photographed with 35mm slide film and shown during a hamfest program on SSTV. A local photographic technician, Robert Perkins, later converted the slide to a photographic print. As this picture underwent one additional processing step, you can get an idea of the previously mentioned degradation of reproduced SSTV pictures.)

Photo 5 is a street scene which was also received from XE2JOF. Although late afternoon shadows block part of our view, the old world Mexican-type achitecture is quite apparent on the picture's left side. Among the other interesting pictures which Sergio has shared with SSTVers are the Our Lady of Guadeloupe Shrine, Aztec Calendars, and the Mexican Pyramids.

Photo 6, received from Bob N7TV, shows a saguaro cactus which grows in the desert land slightly east of his Tucson, Arizona, home. This cactus grows for hundreds of years and reaches heights of 40 to 60 feet (super antenna support, eh?). The white blossom which appears on the tips of this cactus is the state flower of Arizona.

Bob describes the desert as being alive with flowers and colors which are particularly beautiful during the spring. The Sonoran Desert and the Saguaro National Forest, for example, are very popular tourist attractions. As you've seen in old western movies, all the desert seems to look alike once camping or hiking enthusiasts lose sight of civilization. Compasses and water canteens continue to be vital traveling instruments in this area. Desert heat can sneak up on people because of the low humidity.

Photo 7 is an SSTV-reprocessed weather satellite picture which was received from W1BGW in Massachusetts. Jack acquired this picture from our NOAA-5 satellite as it transmitted cloud cover pictures on the 136 MHz band. The satellite was passing over our eastern seaboard at the time, and the photo shows a fairly well-defined east coast on the right side of the picture, with Lakes Erie and Ontario at the top right. The mid-U.S. (near middle of picture) is covered by heavy clouds. The line through the center of the picture is due to satellite processing of the picture.

Several other SSTVers are also working extensively with weather satellite reception, and their frequent display of SSTV pictures is truly fascinating. One of the most interesting pictures I remember seeing was a view of the Devil's Triangle, which revealed an actual triangular shaped formation in the Atlantic.

This galley of pictures illustrates some of the ways we are using and enjoying SSTV today. Each night's slow scan operation continues to bring more unique experiences, and each day's discussions bring more technical advancements. We SSTVers are having the time of our lives and would like to share our enjoyment with others. If you're tiring of "ordinary" QSOs and are considering a change of pace in amateur radio, we're sure that you, too, will like the fascinating world of SSTV.

The majority of current SSTV activity centers ±10 kHz of the following frequencies (in order of activity): 14,230 kHz; 3845 kHz; 28,680 kHz; 21,340 kHz; and 7171 kHz. The U.S. SSTV Net meets each Saturday at 1800 GMT on 14,230 kHz. We'll be looking forward to seeing you there and learning about your area and special interests, also. ■

Looking West

from page 18

It was about 3:30 that afternoon when the news of the stay reached us here in the Southland. It came as a phone call to SCRA Chairman Jim Hendershot from ARRL Southwestern Vice-Director Jay Holliday W6EJJ. Jay had received word directly from ARRL HQ about this almost unprecedented FCC action. As we were to soon learn, thanks to Jay, we were possibly the first council to get the news. In fact, many other areas got the news from phone calls we made to them looking for reactions on their part. Most said that this was the first inkling they had on the matter. All those that I spoke with were surprised at the news, a few thought I was playing an early "April Fool" joke, some were dismayed, one or two were mad, but the majority seemed almost relieved.

By the am rush hour the next morning, word had spread locally, thanks to announcements made on a couple of key area repeaters. Just about everyone knew that "Repeater/Remote" deregulation had been halted for the moment. I expected to hear some rather bitter reaction from "Joe Ham"; instead, on the three busy repeaters I listened to, there was nary a word on the topic. On one, I broke in and brought up the topic, but there seemed to be total disinterest among the user group on hand. They were far more concerned about a tie-up on the San Diego Freeway than about deregulation of repeaters. I began to wonder if the only people who were really concerned were those who wanted to put up a repeater of their own. Listening around for the next week bore this out. At least out here, the only people who were really upset over the stay were potential repeater "putter-uppers." "Joe Ham" could have cared less.

As I write this on December 4, all is calm. There is no word yet from the Commission as to the outcome of the "reconsideration." Everyone is speculating as to what the next FCC move will be. Daily I receive at least a half dozen calls from amateurs who claim to have "officially" heard this or that. The "officially" usually turns out to be a QSO someplace. I can only say that, in this one, I know about as much as you. The Commission is silent. They are waiting to receive comments on the stay, ideas as to what you and I want them to do. If you have any feelings at all, now is the time to let the FCC know what they are. If you wait, and the final action

Continued on page 49

Edgar V. Poirer
P.O. Box 53
Charlo, N.B.
Canada E0B 1M0

Build A Better Phone Patch

—hybrid—op amps—the works

The function of a hybrid in a phone patch is to connect a bidirectional land line to a transmitter and receiver while isolating the received signal from the transmitter. All this can be done without any switching by the operator.

The most common hybrid, a passive transformer type, has a certain amount of loss and not all that much attenuation of the received signal at the transmitter input. It is also subject to some phase shifting, which makes the attenuation over the full range of audio frequencies very difficult. A typical circuit is shown in Fig. 1. RX and CX are chosen to null the receiver signal at the transmitter. Their value depends on line characteristics. Note the dots near the transformer windings. These indicate winding direction, and this is very important for the proper operation of the hybrid. The main disadvantage of the transformer hybrid is the relatively low amount of attenuation at the null.

While looking at some notes on op amps, it suddenly struck me that an op amp could be used to make a better hybrid. By using an op amp difference amplifier to compare the signal coming directly from the receiver with the same signal at the toll line, a high degree of isolation could be achieved. However, a signal from the toll line would be amplified only if some isolation were provided between the receiver and the line transformer. This could easily be accomplished by another op amp used as a noninverting line amplifier.

The op amp difference amplifier compares the levels of the signals reaching both the inverting and noninverting inputs and amplifies the difference. If both signals are identical, the output is zero. See Fig. 2 for details.

The final circuit for the

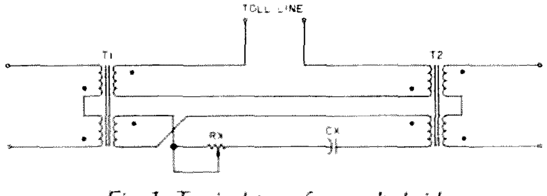

Fig. 1. Typical transformer hybrid.

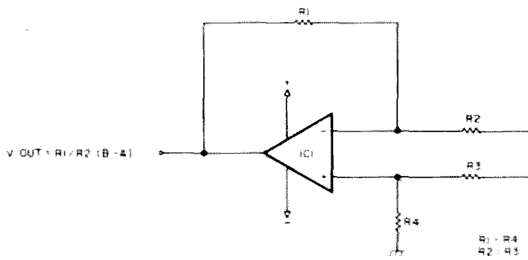

Fig. 2 Difference amplifier.

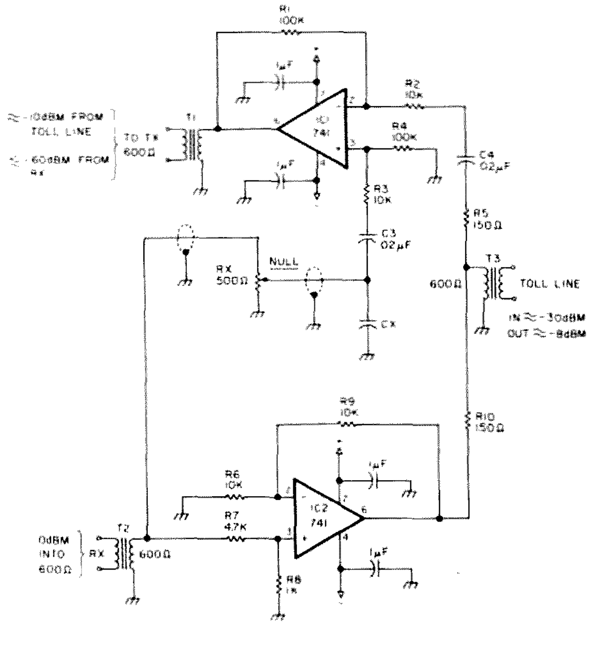

Fig. 3. Solid state hybrid. Note: The resistors are ½ W; the capacitors are mylar; T1, T2, and T3 are 600Ω to 600Ω.

solid state hybrid is shown in Fig. 3. To prevent excessive phasing problems, R5 and R10 are used to couple the two op amps, rather than a transformer. Some phase shifting may still occur in IC2. In order to compensate, we introduce CX. RX and CX form the balancing network. RX is mainly used to adjust for differences in levels, but, with CX, it also introduces a variable phase shift. To properly adjust RX and CX, we must go back and forth from one to the other until the signal from T2 is no longer present at T1. A typical value for CX is 0.002 uF, with RX near the center of its range. A capacitance substitution box is almost indispensable to find the value of CX. For proper operation, phase shifts in the circuit must be held to a minimum. No frequency response shaping networks should be used at the op amps. If these are required, they should be included outside the hybrid. Capacitors should be avoided. C3 and C4 are acceptable, however, as any small phase shift they introduce can be corrected for by CX and RX if they are fairly well matched.

R7 and R8 are used to attenuate the received signal to the proper level at the roll line and are dependent on the level of the received signal. R1 and R4 set the gain of IC1 and could be altered for a different set of requirements, or another amplifier could be included between T1 and IC1. The gain of IC1 should not be increased, since this would make nulling much more critical.

This particular circuit was designed for a system that uses compression amplifiers after T1 and before T2. These insure that any changes in the receiver or toll line levels will not affect the duplex operation. A simple compressor/expander as described in the January, 1977, issue of *73* would be ideal. The levels in

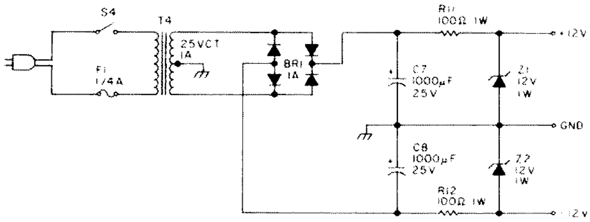

Fig. 4. Power supply.

Fig. 3 are typical for the circuit shown. The transformers T1 and T2 may not be required if a balanced line is not used. The installation for which this circuit was built is a marine radio land station operated by the Canadian Ministry of Transport. It was designed for use in a ship-to-shore duplex system.

I would suggest that printed circuit construction be used as well as shielded wiring, since some of the audio levels are as low as -40 dBm. The circuit should also be in a shielded enclosure to further reduce the possibility of noise. Power supply requirements are not too critical. A simple power supply, such as that shown in Fig. 4, should be adequate. Good construction practice is a must to keep hum and noise down. T4 should be positioned to minimize hum.

This circuit is very economical and is a practical approach to building a good phone patch. T3 may have to be connected to the toll line through a coupler. Details on obtaining one should be available through local telephone offices. This circuit is very flexible and may be adapted to different installations without any great difficulties.

My thanks to Bernard Cormier and the staff for their help in proving the design. ■

Dave Ingram K4TWJ
Eastwood Village #1201 S.
Rt. 11, Box 499
Birmingham AL 35201

Drake TR-4CW Review

Recently, I was confronted with the very pleasant task of selecting a new transceiver for my low-band setup at home. Such occasions are rather rare in my life, so I gathered information on every available unit and went over it with a fine-tooth comb. I wanted (among other things) a state-of-the-art rig with reliability, service, and station compatibility. As I have an extensive electronics background and could afford any one of the popular transceivers, my final choice was to be based on what I considered the best all-around rig.

While pondering this decision, I continued to enjoy my ever-faithful Drake TR-4 transceiver (five years service without any problems). I kept thinking, also, of the entanglements I've had trying to get parts for my Japanese-manufactured 2 meter handie-talkie (service was merely a legend).

Then R. L. Drake Company announced their TR-4CW transceiver, and I knew that my decision had been made. If this transceiver performed half as well as my older TR-4, it would be a winner. If I ran into a problem that I couldn't solve in a few minutes time, I could phone the service department of Drake Company and get assistance. I could purchase any necessary parts from a local distributor. Now that's reliability! Another detail that I appreciated was being able to purchase extra Drake knobs and cabinets for my home brew linear amplifier, SSTV monitor, and station control. This really added the "professional matching touch" to all my gear.

The R. L. Drake TR-4CW runs 300 Watts SSB input and 260 Watts CW input on the 80 through 10 meter amateur bands. A generous overcoverage on most bands permits tuning any band expansions that might evolve in 1979. The dial is calibrated in 1 kHz increments, and visual interpolation to 250 Hz or 500 Hz is quite easy. Receiver sensitivity is better than .5 uV for a 10 dB signal plus noise ratio, which means that you can hear those weak stations without straining. One of the outstanding features of the TR-4CW is its superb agc action – less than 3 dB variation for 60 dB change in input signals. This means that an S2 signal and a 40 dB over S9 signal produce practically the same audio volume from the speaker. This feature is a super advantage if you like working DX, contests, or don't like a blaring rig when someone throws a 2 kW signal on frequency. The TR-4CW's 8-pole SSB filter has the same shaping factor and ultimate rejection as any 8-pole filter, but less in-circuit loss. It has an initial bandpass of 2.1 kHz and does a beautiful job of eliminating adjacent-channel interference. The big news on the TR-4CW is its 500 Hz CW filter. This filter is standard equipment – not an option – and it really pulls weak stations out of the mud. Either the SSB or CW filter can be front panel selected for CW use. If you like comfortable operating and a quiet but highly sensitive rig, the TR-4CW will spoil you!

Several front panel controls increase the rig's flexibility by serving a dual purpose. The transmitter gain control functions as an rf output level control on CW/tune and as a mike gain control on SSB. The VOX sensitivity tracks with this control during SSB operation, but it can also be independently adjusted by a side-mounted control, if desired. In other words, should you decide to talk softer, you merely increase the transmitter gain and the VOX will follow it. The VOX can be overridden by merely keying the mike's push to talk. Another side-mounted control

The R. L. Drake TR-4CW.

Shoestring Switching For CW

Skip Baldwin
Box 76
FPO San Francisco CA 96637

There are quite a number of us who are just getting into ham radio. We don't have much money to buy some of the nicer and very expensive transceivers that are on the market today. So we are forced to turn to the role of the modifier and experimenter. Having become one of the aforementioned through necessity, I have developed a working system for the switching of a receiver and transmitter for low power CW work.

The circuit is quite easy to make and utilizes a minimum of parts and dollars. It uses a standard telephone switching relay, which has at least two transfer switches. Let me explain what I mean by transfer switches. They are the levers of the switch that either make (close) or break (open), depending on the operation of the relay. By utilizing these transfer switches and their operation, you can switch the antenna inputs between a transmitter and a receiver. Thus, a hands-off operation is made using the relay. Operation is made possible by a foot switch made from a push-button SPST switch. This is mounted on a board which is laid on the floor.

Construction

Mount the relay on a board or in a small cabinet (one would be available at Radio Shack or any other electronics store). You can get the relay from Radio Shack, another electronics store, or an outlet that stocks surplus telephone equipment. This switch doesn't have to have two transfer switches, but, if it does, you will be able to also have a switched ground. Mount your antenna leads to the relay as in Fig. 1. Also, mount your transmitter and receiver to the relay as in Fig. 1. The antenna mounts on the lever or moving arm of the relay. The transmitter mounts to the contact, which is closed with the lever switch when power is applied. In most relays this is the bottom contact. The receiver mounts to the contact, which is closed when power is applied to the relay. Also, do the same with the coax ground on another transfer switch.

Mount the switch on a board, or some other piece of metal or plastic, to form a pedal. Leave enough slack in the wire for a change in position, or to move it out of the way when not in use. Wire the switch in series to the coil of the relay and a 12 V dc power supply. This power supply may be a standard ac to dc or a 12 V battery. The supply input should be mounted on the board with the relay.

That's about all there is to it, except that this should only be used with a low power rig, and the transmitter and the receiver should be kept a distance away from each other, so there will be no spurious emissions that the receiver might pick up. If you get a relay with three transfer switches, it would be possible to key the relay from your speaker on the receiver. Keep an eye on the relay contacts for charring, the first couple of times you use this. It should work well with 25 Watts or less on CW. Total cost of this project should be in the neighborhood of $5.00. ■

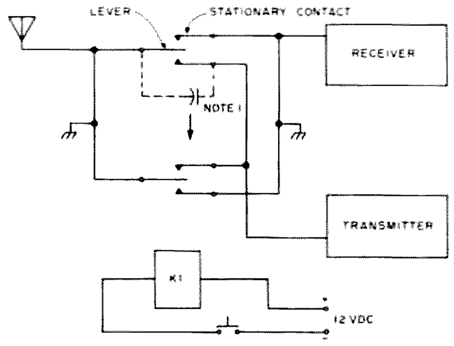

Fig. 1. Note 1: A 1000 uF capacitor may be put across the contacts if arcing occurs. No power must be applied from the transmitter during switching.

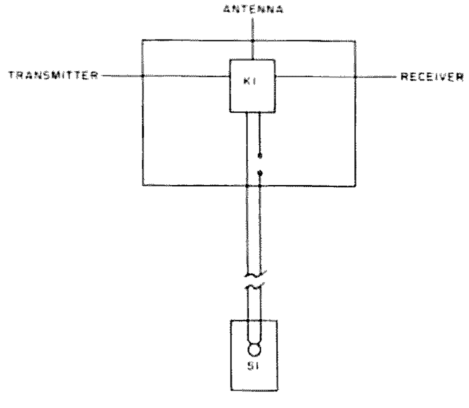

Fig. 2.

Ralph A. Giffone N2RG
963 East 105 Street
Brooklyn NY 11236

Relaying For Fun and No Profit

The National Traffic System (NTS) is a major traffic network composed of many building blocks called nets. Through well-planned schedules and routing of traffic, NTS can take traffic from anywhere to everywhere in a matter of hours. The most fundamental of all NTS nets is the section net. Your traffic handling adventure begins here.

In my opinion, if you can function on a CW net, you can function on a phone and RTTY net. Not so the other way around. I will therefore put my first emphasis on CW traffic handling and CW net procedures and branch off later in the article to cover all facets of traffic handling.

Amateur Message Form

The first time that you check into your section net, you will probably want to listen in and get the feel of the net. Soon, however, you'll want to take part in the net's activity. The first traffic that you are likely to handle will be one of your own origination. It is essential, therefore, that you know how to originate third party traffic.

Fig. 1 shows the ARRL's CD Operating Aid 9, which explains the *Amateur Message Form*. Every message that you ever send or receive must be in this form. To some, it seems rather complex; to others, it is just part of the game! Let's break it down and find the significance of each part.

The first major section is called the preamble. This is specifically for the benefit of the station receiving the message (hereafter referred to as the *relay station* or *relay*). The preamble is broken up into eight parts, a-h. Please use Fig. 1 as a guide.

a. *Message Number* — Each and every message must have a number. You begin with NR 1 and continue sequentially. This number is for filing purposes and reference purposes (to be clearly explained later). Some stations begin with NR 1 each month, some each year. It's completely up to the operator's preferences.

b. *Precedence* — The precedence is extremely important. There are four precedences: Emergency, Priority, Inquiry, and Routine. They are handled in that order also. An *emergency* message will *always* be handled before all others. The same is true for the other precedences — the higher the precedence, the quicker it must be handled. Fig. 1 has a list of precedences. I suggest that you read it carefully and understand it fully. Virtually every message that you will handle will be a *routine* message unless there is an emergency. This, however, is extremely *rare*. Note: On CW, routine is R, inquiry is Q, and priority is P, but emergency is always spelled out completely.

c. *Handling Instructions* — Handling instructions are optional, that is, they are not essential for proper handling of traffic. There may be, however, some special duty that the originating station requests of the delivering station. For instance: HXE tells the delivering station to originate a reply for the addressee. If you are very demanding and wish to combine two or more instructions, you may. HXCE means to not only get a reply, but to also report the date and time of delivery. (Note that some handling instructions, like HXA, may be followed by a number.) I suggest that you read all the different handling instructions, though it isn't necessary to memorize every single one.

d. *Station of Origin* — The station who originally sent the message. This is very important, as you will see later.

e. *Check* — The check is the number of words in the text of the message. It is very helpful because it allows the relay station to *check* if he has received your message completely. If his "word count" does not agree with the check, he is then alerted

that something is wrong.

f. *Place of Origination* – This is quite obvious. It is not trivial, however, as its importance will be clear later.

g. *Time Filed* – This is optional and most messages do not include this unless there is some specific time limit on the delivery of the message (see HXB).

h. *Date* – Simply the date that the message was filed. Note that if you include the time, the date must agree with that time: If the time is UTC, it may be a different day by UTC than it is locally, so be observant!

The preamble is a well-designed introduction which has many helps for the relay and delivering station. More references to this later.

The second part of the radiogram is the *address*. The address should be as complete as one *you* would put *on* an envelope. (The delivering station may have to mail it.) You should include the phone number if you have it.

When the address is sent, it is necessary to separate each line of the address with $\overline{AA}$ (di*dah*di*dah*, not di*dah* di*dah*). *This is an absolute must.* You would not address an envelope using only one line, would you? No. After the last line, however, you must send $\overline{BT}$ instead of $\overline{AA}$.

The third part of the radiogram is called the text (of the message). Remember that there is *no punctuation whatever.* All thoughts are separated by *X*. If you have a question, you may send the word QUERY after it, but *never* dididahdahdidit (i.e., "How are you query I am fine X 73").

The text begins with $\overline{BT}$ (break) and ends with $\overline{BT}$. Remember the check? It is the number of words between both $\overline{BT}$s. (X and query are counted as words; $\overline{BT}$ is not.)

The fourth and last part of the radiogram is the signature. It is sent after the last $\overline{BT}$. The signature is followed by $\overline{AR}$. If there is another message to follow, you send $\overline{AR}$ B. If there is no other message, $\overline{AR}$ N is proper.

The Amateur Message Form is not really difficult, but it is essential for proper traffic handling. It should be *very* familiar to you before continuing on.

Throughout the rest of the article I will be using Q signals and abbreviations that will be most unfamiliar to you. They are listed in Fig. 2, which displays the flip side of CD Operating Aid 9 mentioned earlier.

When you feel that you are ready to check in (QNI) to your section net, tune in the net's frequency at net time and wait for the Net Control Station (NCS) to "call up" the net. He will call up the net by sending CQ followed by the net's respective designation. For example, the net designation for the New York City-Long Island Slow Speed Section Net is *NLS*. At 6 pm on 3.730 MHz, the NCS for that night will send: "CQ NLS CQ NLS DE WB2YKG NLS THE NEW YORK CITY AND LONG ISLAND SLOW SPEED SECTION NET *QND QNZ* NLS DE WB2YKG *QNI K* . . .". He will then listen for people trying to check in. If you wish to check in, send a Morse code character to the NCS, and, if he sends it back, you may then check in. For example, he sends *NLS K* and you send *dididahdit*. If he sends back *diddidahdit*, that means that you can call him and list your traffic. You check in this way: WB2YKG

AMATEUR MESSAGE FORM

Every message originated and handled should contain the following component parts in the order given

I PREAMBLE
- *a.* Number (begin with 1 each month or year)
- *b.* Precedence (R, Q, P or EMERGENCY)
- *c.* Handling instructions (optional, see text)
- *d.* Station of Origin (first amateur handler)
- *e.* Check (number of words/groups in text only)
- *f.* Place of Origin (not necessarily location of station of origin)
- *g.* Time Filed (optional with originating station)
- *h.* Date (must agree with date of time filed)

II ADDRESS *(as complete as possible, include zip code and telephone number)*

III TEXT (limit to 25 words or less, if possible)

IV SIGNATURE

CW MESSAGE EXAMPLE

I NR 1 R HXA W1AW 8 NEWINGTON CONN 1830Z July 1
a b c d e f g h

II DONALD R SMITH $\overline{AA}$
164 EAST SIXTH AVE $\overline{AA}$
NORTH RIVER CITY MO 00789 $\overline{AA}$
FONE 733 3968 $\overline{BT}$

III HAPPY BIRTHDAY X SEE YOU SOON X LOVE $\overline{BT}$

IV DIANA $\overline{AR}$

CW: Note that X, when used in the text as punctuation, counts as a word. The prosign $\overline{AA}$ separates the parts of the address, $\overline{BT}$ separates the address from the text and the text from the signature. $\overline{AR}$ marks end of message; this is followed by B if there is another message to follow, by N if this is the only or last message. It is customary to copy the preamble, parts of the address, text and signature on separate lines.

RTTY: Same as cw procedure above, except (1) use extra space between parts of address, instead of $\overline{AA}$; (2) omit cw procedure sign $\overline{BT}$ to separate text from address and signature, using line spaces instead; (3) add a CFM line under the signature, consisting of all names, numerals and unusual words in the message in the order transmitted.

PHONE: In general, use *prowords* in place of procedural signals or *prosigns*. The above message on phone would go something like this: "*Message Follows* Number one, routine, HX Alpha, W1AW, *check* eight, Newington, Connecticut, one eight thuhree zero zulu, July one, *to* Donald *Initial* R Smith, *Figures* one six fower, East Sixth Avenue, North River City, Missouri zero zero seven eight niner, Fone sev-ven thuhree thuhree, thuhree niyen six eight. *Break* Happy Birthday X-ray see you soon X-ray love *Break* Diana. *End of Message. Over.*" Speak in measured tones, emphasizing every syllable. Spell out phonetically all difficult or unusual words, but do not spell out common ones.

PRECEDENCES

The precedence will follow the message number. For example, on cw 207R or 207 EMERGENCY. On phone "Two Zero Seven, Routine (or Emergency)."

EMERGENCY – Any message having life and death urgency to any person or group of persons, which is transmitted by amateur radio in the absence of regular commercial facilities. This includes official messages of welfare agencies during emergencies requesting supplies, materials or instructions vital to relief of stricken populace in emergency areas. During normal times, it will be very rare. On cw, this designation will always be spelled out. When in doubt, do not use it.

PRIORITY – Important messages having a specific time limit. Official messages not covered in the "Emergency" category. Press dispatches and other emergency-related traffic not of the utmost urgency. Notification of death or injury in a disaster area, personal or official. Use the abbreviation P on cw.

INQUIRY – Messages pertaining to the health or welfare of persons in a disaster should carry this precedence, which is abbreviated to Q on cw. These messages are handled after PRIORITY traffic, but before ROUTINE.

ROUTINE – Most traffic in normal times will bear this designation. In disaster situations, traffic labeled "Routine" (R on cw) should be handled last, or not at all when circuits are busy with emergency, priority or inquiry traffic. Most traffic handled on amateur circuits in normal times will fall in this category.

Handling Instructions

HXA – (Followed by number.) Collect landline delivery authorized by addressee within ___ miles. (If no number, authorization is unlimited.)
HXB – (Followed by number.) Cancel message if not delivered within ___ hours of filing time; service originating station.
HXC – Report date and time of delivery (TOD) to originating station.
HXD – Report to originating station the identity of station from which received, plus date and time. Report identity of station to which relayed, plus date and time, or if delivered report date, time and method of delivery.
HXE – Delivering station get reply from addressee, originate message back.
HXF – (Followed by number.) Hold delivery until ___ (date).
HXG – Delivery by mail or landline toll call not required. If toll or other expense involved, cancel message and service originating station.

This prosign (when used) will be inserted in the message preamble before the station of origin, thus: NR 207 R HXA50 W1AW 12 ___ (etc.). If more than one HX prosign is used, they can be combined if no numbers are to be inserted, otherwise the HX should be repeated, thus: NR 207 R HXAC W1AW ___ (etc.), but: NR 207 R HXA50 HXC W1AW ___ (etc.). On phone, use phonetics for the letter or letters following the HX, to insure accuracy.

OPAID 9 8/075 ARRL, 225 Main St., Newington, CT 06111

Fig. 1. ARRL's CD Operating Aid 9, the Amateur Message Form.

ARRL QN SIGNALS FOR CW NET USE

QNA*	Answer in prearranged order.
QNB*	Act as relay between ___ and ___.
QNC	All net stations Copy. I have a message for all net stations.
QND*	Net is Directed (controlled by net control station)
QNE*	Entire net stand by.
QNF	Net is Free (not controlled)
QNG	Take over as net control station.
QNH	Your net frequency is High.
QNI	Net stations report in.* I am reporting into the net. (Follow with a list of traffic or QRU.)
QNJ	Can you copy me? Can you copy ___?
QNK*	Transmit messages for ___ to ___.
QNL	Your net frequency is Low.
QNM*	You are QRMing the net. Stand by.
QNN	Net control station is ___. What station has net control?
QNO	Station is leaving the net.
QNP	Unable to copy you. Unable to copy ___.
QNQ*	Move frequency to ___ and wait for ___ to finish handling traffic. Then send him traffic for ___.
QNR*	Answer ___ and Receive traffic.
QNS	Following Stations are in the net.* (Follow with list.) Request list of stations in the net.
QNT	I request permission to leave the net for ___ minutes.
QNU*	The net has traffic for you. Stand by.
QNV*	Establish contact with ___ on this frequency. If successful, move to ___ and send him traffic for ___.
QNW	How do I route messages for ___?
QNX	You are excused from the net.* Request to be excused from the net.
QNY*	Shift to another frequency (or to ___ kHz) to clear traffic with ___.
QNZ	Zero beat your signal with mine.

*For use only by the Net Control Station.

Notes on Use of QN Signals

The QN signals listed above are special ARRL signals for use in amateur cw nets only. They are not for use in casual amateur conversation. Other meanings that may be used in other services do not apply. Do not use QN signals on phone nets. Say it with words. QN signals need not be followed by a question mark, even though the meaning may be interrogatory.

INTERNATIONAL Q SIGNALS

A Q signal followed by a ? asks a question. A Q signal without the ? answers the question affirmatively, unless otherwise indicated. See the *ARRL Handbook* and *Operating an Amateur Radio Station* for an expanded list.

QRA	What is the name of your station?
QRG	What's my exact frequency?
QRH	Does my frequency vary?
QRI	How is my tone? (1-3)
QRK	What is my signal intelligibility? (1-5)
QRL	Are you busy?
QRM	*Is my transmission being interfered with?*
QRN	Are you troubled by static?
QRO	Shall I increase transmitter power?
QRP	Shall I decrease transmitter power?
QRQ	Shall I send faster?
QRS	Shall I send slower?
QRT	Shall I stop sending?
QRU	Have you anything for me? (Answer in negative.)
QRV	Are you ready?
QRW	Shall I tell ___ you're calling him?
QRX	When will you call again?
QRZ	Who is calling me?
QSA	What is my signal strength? (1-5)
QSB	Are my signals fading?
QSD	Are my signals mutilated?
QSG	Shall I send ___ messages at a time?
QSK	Can you work breakin?
QSL	Can you acknowledge receipt?
QSM	Shall I repeat the last message sent?
QSO	Can you communicate with ___ direct?
QSP	Will you relay to ___?
QSV	Shall I send a series of V's?
QSW	Will you transmit on ___?
QSX	Will you listen for ___ on ___?
QSY	Shall I change frequency?
QSZ	Shall I send each word/group more than once? (Answer, send twice or ___.)
QTA	Shall I cancel number ___?
QTB	Do you agree with my word count? (Answer negative.)
QTC	How many messages have you to send?
QTH	What is your location?
QTR	What is your time?
QTV	Shall I stand guard for you ___?
QTX	Will you keep your station open for further communication with me?
QUA	Have you news of ___?

ABBREVIATIONS, PROSIGNS, PROWORDS

CW	PHONE (meaning or purpose, exception obvious)
$\overline{AA}$	(Separation between parts of address or signature.)
AA	All after (used to get fills).
AB	All before (used to get fills).
ADEE	Addressee (name of person to whom message addressed)
ADR	Address (second part of message)
$\overline{AR}$	End of message (end of record copy)
ARL	(Used with "check," indicates use of ARRL numbered message in text.)
$\overline{AS}$	Stand by; wait.
B	More (another message to follow).
BK	Break; break me; break-in. (Interrupt transmission on cw. Quick check on phone.)
$\overline{BT}$	Separation (break) between address and text; between text and signature.
C	Correct; yes
CFM	Confirm. (Check me on this.)
CK	Check
DE	From; this is (preceding identification)
FONE	Phone; telephone.
$\overline{HH}$	(Error in sending. Transmission continues with last word correctly sent.)

CW	PHONE (meaning or purpose, exception obvious)
HX	(Handling instructions. Optional part of preamble.)
....	Initial(s). Single letter(s) to follow.
$\overline{IMI}$	Repeat; I say again. (Difficult or unusual words or groups.)
K	Go ahead; over; reply expected. (Invitation to transmit.)
N	Negative, incorrect; no more. (No more messages to follow.)
NR	Number. (Message follow.)
PBL	Preamble (first part of message).
....	Read back. (Repeat as received.)
R	Roger, point. (Received; decimal point.)
SIG	Signed; signature (last part of message).
$\overline{SK}$	Out; clear (end of communication, no reply expected).
TU	Thank you.
WA	Word after (used to get fills).
WB	Word before (used to get fills).
....	Speak slower.
....	Speak faster.

-over-

Printed in U.S.A.

Fig. 2. Q signals and abbreviations.

STATION ACTIVITY REPORT To SCM of NL1 ARRL Section

Amateur Radio Station WB2XXX Appointment(s) ORS Month AUGUST

Major Activity: (Tfc, DX, etc.) TRAFFIC

TRAFFIC•
Originated . . 5 . . . .
Received . . . 13 . . . .
Sent . . . . 7 . . . . . .
Delivered . . . 10 . . . .
Total . . . . . . 35 . . . .
No. of Oprs . . . . 1 . . . .

SCHEDULES AND NET AFFILIATIONS: Time Frequency

NLS	6:00 PM	3730
NL/PN	5:30AM	3930

REMARKS to assist SCM with report (changes in rig, AREC/RACES drills, prospects for appointment, outstanding records, special stunts, items of general interest, etc.):

GOT A NEW RIG — JUST PASSED FCC TEST — EXPERIMENTING WITH NEW BEAM — ETC.

Signed

• Originated: A message originated by someone other than yourself, filed for initial transmission at your station. Received: Any message received over the air at your station. Sent: Any message sent over the air from your station. Delivered: Any message received at your station and delivered to someone other than yourself. See Operating an Amateur Radio Station for further details.

Form 1 Printed in U.S.A.

Public Service Honor Roll

This listing is available to amateurs whose public service during the reported month qualifies for 40 or more total points in the nine categories below. Please note the maximum points for each category.

Category	*(1)*	*(2)*	*(3)*	*(4)*	*(5)*	*(6)*	*(7)*	*(8)*	*(9)*	
Max. Pts.	10	10	12	12	12	20	3	–	5	
Your Totals										=

Category Key: (1) Checking into cw nets, 1 point each; (2) Checking into phone/RTTY nets, 1 point each; (3) NCS cw nets, 3 points each; (4) NCS phone/RTTY nets, 3 points each; (5) Performing assigned liaison, 3 points each; (6) Legal phone patches, 1 point each; (7) Making BPL, 3 points regardless of traffic total; (8) Handling emergency traffic directly with a disaster area, 1 point each message; (9) Serving as net manager for the entire month, 5 points.

Single-Op. *I certify the above to be true and correct.*
Multiop. *Signature* *Call*

Fig. 3. Station Activity Report.

DE WB2XXX GE RALPH QTC BRONX 1 $\overline{AA}$ RONKONKOMA 2 $\overline{AA}$ 2RN 1 $\overline{AR}$. Note how the traffic is listed: Place Number $\overline{AA}$ Place Number $\overline{AA}$. In essence, you are saying, "I have one message for the Bronx, two messages for Ronkonkoma, and one message for the Second Region Net (2RN)." Note that any traffic whose destination is out of the section is sent to the region net. Any traffic for within the section is listed by its destination. This is because the net will have people from the section to take your traffic. (Note: If you wish to check in but have no traffic, send "QRU" in place of "QTC", etc.)

The NCS will continue calling up the net and accepting check-ins throughout the net session, so don't get upset if you don't get to check in the minute the net starts.

When a station that can handle your traffic checks in, the NCS will send you both *off frequency* (QNY). "WB2XXX (you) WB2YYY (the relay) UP 5 BRONX 1 US . . ." This indicates that you and the relay are to go up five kilohertz and pass your Bronx traffic.

Let's see what happens off frequency. You'll begin by *listening* up five kilohertz because *the relay station always calls the station with the traffic.* The NCS said to go up five, but don't just listen up five, tune around and listen, because if there was another station up five, WB2YYY would not just start calling you on top of him (I hope).

When contact is established, you will ask the relay station, "QRV?" (Are you ready?) If he is ready, he will answer, "QRV." (I am ready.) You will then send your traffic.

If, while copying your traffic, the relay station misses a couple of words (or even a lot of words), he must go through a process known as "getting fills" (to fill in the missing words). When you get a fill, be sure to use the proper abbreviations given at the bottom of Fig. 2; on CW, speed is essential.

Let's see how they're used. Suppose that this was what the relay station had copied: "HAPPY X SEE SOON X LOVE $\overline{BT}$ . . ." He would then ask for fills in the following manner: WA HAPPY? . . . WB SOON?, etc. You would then send the respective fills that were asked for.

When the relay station has copied the *entire* message and is *sure* of every part, he may "QSL" the message and acknowledge receipt. I'd like to say something very important, something that most traffic handlers forget. Any time that you receive a piece of traffic, it is your responsibility and obligation to see that it is delivered or relayed properly and intact. A good traffic handler knows that every message, though unimportant to him, is very important to its sender and its recipient. *Therefore, be sure before you QSL* (even if you must ask for ten fills and fifteen confirmations). Some people think that the sending station might look down on them if they ask for many fills. I say that if you *don't* ask for fills, you are a poorer traffic handler because you don't care enough to do it right. End of sermon.

When the relay has QSLed the message, the two of you must *identify*, and then you may return to the net frequency. Don't disappear; there may be other traffic for you. Upon your return to the net frequency, you wait until a call-up and then send the last three letters of your call. The NCS will acknowledge your return by sending those three letters back to you. Then you must wait for further instructions. In the event that the NCS doesn't hear and acknowledge your return, it's no big deal . . . just try again on the next call-up.

If during the course of the net you have to say or ask something of the NCS, send the last three letters of your call, and when he sends them back, that means that you have permission to say your piece. *Never* just start sending without permission, because the NCS is exactly what his name implies – net control, in *control* of the net!

After you have been on the net for about ten minutes, if there is no traffic for you, you will be excused from the net (QNX). *Never* ask to be excused unless you truly cannot stay on the air. If, when you check in, you know that you can only be on for a couple of minutes, tell the NCS: "GE Ralph QRU ES PSE QNX 7 (minutes) $\overline{AR}$." He will then excuse you before or in seven minutes.

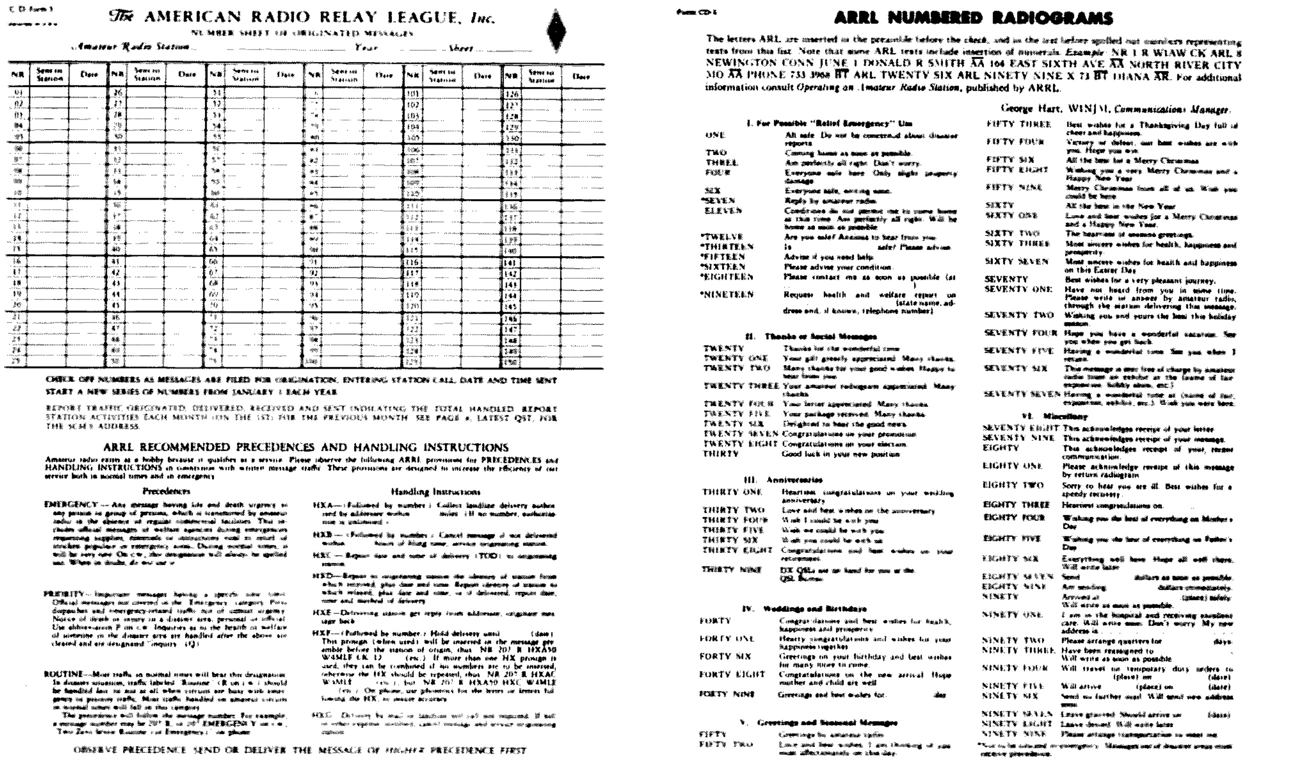
The AMERICAN RADIO RELAY LEAGUE, Inc.

ARRL RECOMMENDED PRECEDENCES AND HANDLING INSTRUCTIONS

ARRL NUMBERED RADIOGRAMS

Fig. 4. ARRL Form CD-3, with ARL numbered texts.

When you are on the nets, use your common sense and try not to tie up the net. Send only when absolutely necessary. *Do not* repeat things unless you are requested. Try to say as much as possible with as little sending as possible.

Phone and RTTY Nets

The procedures on phone and RTTY traffic nets are virtually the same as outlined above. On phone, one must be sure to "say it with words" instead of the abbreviations that accompany CW traffic handling. Also, most of the traffic on the phone net is passed on frequency rather than off frequency. For our purposes, that is all that you need to know. For a more involved explanation of phone and RTTY traffic handling, read the *ARRL Operating Manual*.

That wraps it up for the actual net operation. You now know enough to QNI, QNY, QSP, and QNX. This is enough in itself, but there are other things that you should know, the helpful hints that develop a top-notch traffic handler.

Originating and Delivering Traffic

To gain experience, you should try to handle as much traffic as possible. The bulk of your initial messages will be those of your own origination. Since you already know the form of the message, now you must find the message! Neighbors, friends, relatives, and even yourself are good sources for traffic. One thing to remember is that the message may not be in any code; it must be in plain language (English, Spanish, etc.). You are not permitted to send "commercial messages" (i.e., messages concerning business transactions, etc.).

When you deliver a message, the usual procedure is to read it over the phone to its recipient. If there is no phone number, however, you might mail the message. It is a common courtesy for the delivering station to explain how the message got there and offer to send a reply. You might want to leave your phone number so that the party might be a future source of originations. This kind of thing pleases people and gives them a very nice impression of amateur radio.

Service Messages

A service message is a message from one ham to another concerning a piece of traffic. It is used mainly to inform the originating station as to the whereabouts of his traffic. Perhaps you were unable to deliver a message. You would then service the originating station: NR 12 R WB2XXX 16 BROOKLYN NY JULY 12 WB2NNN $\overline{\text{AA}}$ SARATOGA NY $\overline{\text{BT}}$ REF(erence) UR NR 42 R UNDELIVERABLE X WRONG ADDRESS AND PHONE X PSE ADVISE X 73 BT JOE WB2XXX $\overline{\text{AR}}$.

Remember that I mentioned the importance of the place and station of origin, as well as the message number? This is where it comes in — when you must service the originating station. This would be done with a service message, in the manner previously outlined.

Counting Traffic

Each message is counted as a certain number of points. These points are to be totaled and sent to the Section Communications Manager (SCM)

NR 13 R HXE WB2XXX ARL 5 BROOKLYN NY JULY 13
JOHN BRAZZLE $\overline{\text{AA}}$
17 NORTHEND DR $\overline{\text{AA}}$
SHANTYTOWN CO 10008 $\overline{\text{AA}}$
FONE 758 6274 $\overline{\text{BT}}$ ARL FIFTY X ARL SEVEN $\overline{\text{BT}}$ JOAN AND HARRY $\overline{\text{AR}}$

Fig. 5. Message using an ARL text.

each month, in what is known as a *Station Activity Report* (Fig. 3). It is therefore essential that you know how to count your traffic. Each message sent from your station counts as one sent point. Each one received counts as a received point. Each one originated for a third party (someone other than yourself) counts as one originated point. Each message delivered to a third party counts as one delivered point. This is trickier than it seems. For example, a message originated for your neighbor counts for two points: one originated and one sent. A message delivered to your neighbor counts as one received and one delivered, thus two points. A *service message* received by you counts only as one received and not as a delivery, since it is for yourself and not for a third party. If you send a service message, you do not get an origination point for the same reason – it is not being originated for a third party. Thus, you would only receive one sent point.

As I mentioned before, it is suggested that you send a station activities report to your SCM. To find out who your SCM is, look on page 8 of any current *QST* or write to the ARRL. In this report, you send your traffic totals as well as some other trivia that you might want to add. The SCM has to write a Section Activity Report each month and these items are usually included.

If you have more than 500 traffic points in any month, you qualify for the Brass Pounders League (BPL), a coveted traffic award given by the ARRL. You may also qualify by having 100 originations *plus* deliveries. If you make BPL three times, you qualify for the beautiful BPL medallion.

It is required by the FCC that all third party traffic be logged. That means that you must keep every message that you send or receive at your station for a period of one year. I find that the easiest way to log is to use a looseleaf notebook. Fold one page into four columns – ORIG SENT RCVD DLVD – and as you pass traffic each day, stroke each point into its respective column (I use a different line for each day). I also keep all the messages that I send in this loose-leaf. At the end of the month, I add up each column, and that gives me the totals. Then I remove all the traffic of that month, roll it up, put a rubber band around it, and hold it for a year. At the end of one year you may chuck it in the wastebasket.

ARL Texts

Fig. 4 displays ARRL Form CD-3, which contains a list of the ARL numbered texts. These are the most common messages sent via NTS, and it saves lots of time and effort if you use them. There are some things to be remembered when using them: (1) the letters ARL must be inserted before the check. (2) The ARL numbers must be *spelled out*. Fig. 5 is an example of a message using an ARL text.

Conclusion

This is traffic handling. Although there might seem to be a lot to remember, the more traffic that you pass, the easier it becomes. Don't be timid, either; check into a net and start handling traffic. People will be glad to help you out and clear up any problems that you might have. If you're not proficient at CW, try a slow speed CW net. It's sure to bring up your code speed. You might also try a phone net. Those who have RTTY setups might look for a RTTY net in their area. And, of course, for the brass pounders who can zip out 15-20 wpm code, there's the "fast speed" net.

NTS has something for everyone. Hope to CU all on NTS! ■

Tim Ahrens WA5VQK/5
2200 Sorret Treet Ct.
Austin TX 78744

Build A 3½ Digit DVM

—replaces old meters!

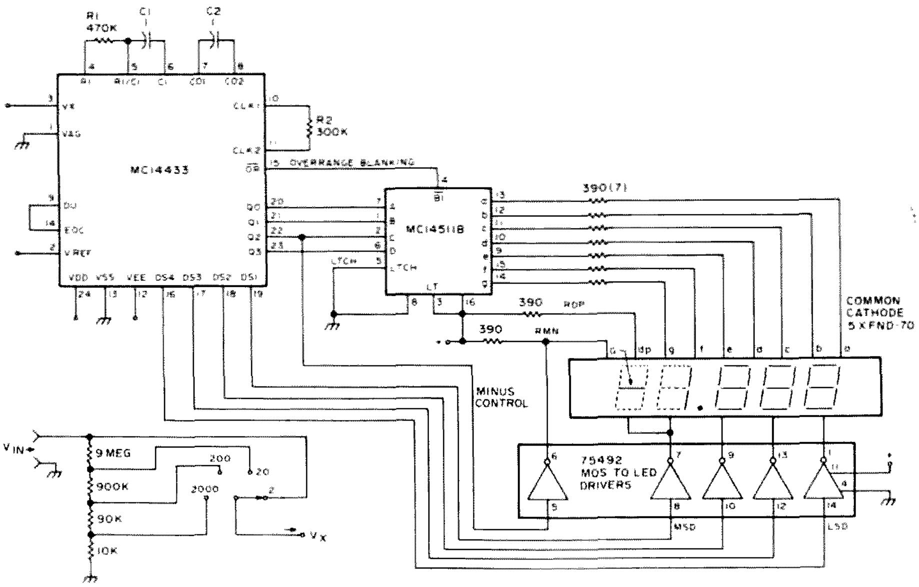

Fig. 1. For discrete LEDs, parallel all segments, but connect only segments B and C to MSD (1). When using 5 display units, tie the cathode of MSD and the minus display unit together. For 2 V full scale: R1 = 470k Ω, V_{ref} = 2 V. For 200 mV full scale: R1 = 27k Ω, V_{ref} = 200 mV.

For many months now, I have been looking for something to update my Simpson 260, as it is on its last legs. The price of a new meter scared me away, as I am a penny-pincher at heart, and the price of the portable digital voltmeter that I had my eye on is enough to make me appreciate the old 260.

About a week ago, I was introduced to one of Motorola's new CMOS devices — the MC14433. This little jewel is an analog-to-digital converter with a multiplexed 3½ digit display which can be set up for either a 200 mV or 2 V full scale reading. The MC14433 is a high performance, low power 3½ digit A/D converter combining both linear CMOS and digital CMOS circuits on a single monolithic IC. It is designed

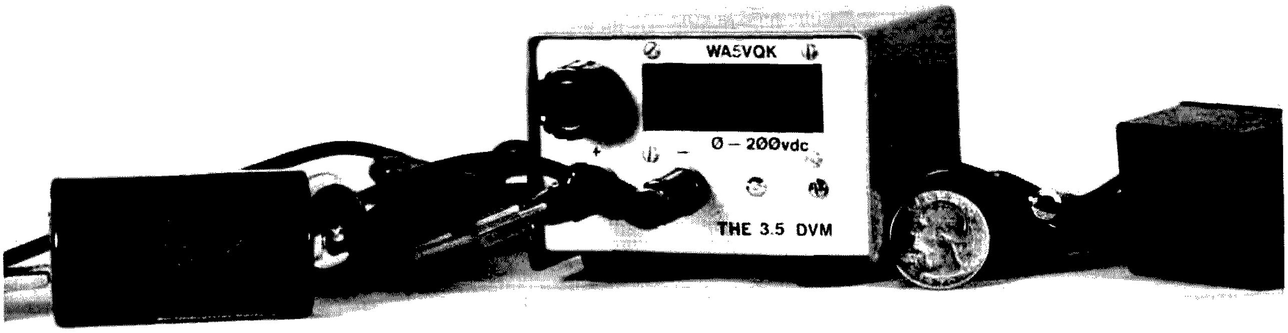

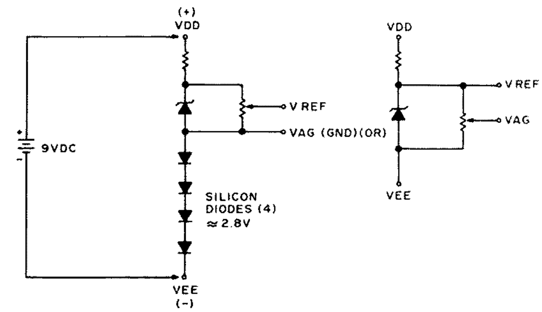

Fig. 2. This circuit is not recommended for use with LED displays.

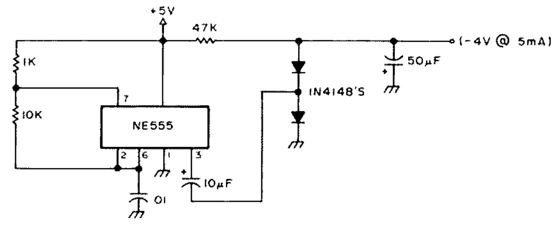

Fig. 3. Positive voltage to negative supply.

to minimize the use of external components, and with two external resistors and two external capacitors, the system forms a dual slope A/D converter with automatic zero correction and automatic polarity selection. For ease of use with batteries, the MC14433 may operate over a wide range of power supply voltages.

OK, so now I have one of these things in my hot little hand. What do I do with it? Well, first I make sure that it is on its own little piece of conductive foam, and don't take it off until I am ready to put it on the circuit/perfboard. I always use a socket with these things, as after I unsolder all of the 24 pins, I'll probably see that I forgot to hook up the power supply! Enough said.

This project is really a "bare bones" layout with a minimum amount of functions, but all that is required to upgrade to a full function DVM is a few more resistors and switches. Since the MC14433 requires both a positive and a negative supply, it necessitates either the use of two batteries, or some other way to generate a negative voltage from a positive source. This is really quite easy, and there are a couple of different methods to obtain it. One easy way to get it is by the method shown in Fig. 2. In this example, a nine volt supply can be used, with 3 V between V_{ag} and V_{ee}, leaving 6 V for V_{dd} to V_{ag}. This system leaves a comfortable margin for battery degeneration (end of life). Note that due to the current requirements of the LEDs, this method is recommended for use only with LCDs. Another method is shown in Fig. 3. This method uses the old reliable NE555. Since this thing generates a square wave, why not use only the negative cycle? Very good, Watson, a splendid idea! Looking at the circuit, we see that the 555 is connected in a regular oscillator fashion. The output, pin 3, is fed through a capacitor to the junction of two diodes. D1 allows the negative cycle to pass through it, and D2 allows the positive cycle to go through it to ground. After filtering, this negative wave is amazingly transformed into dc!

An idea for saving money is to use potentiometers in the area of precision resistors on the input circuitry. Sure, precision resistors would be the way to go, but as long as we are being cheap about this thing, let's go all the way. There are definite values of resistors required for proper operation of the input circuitry, but instead of trying to find the closest thing in your junk box and hoping for the best, we will start with a value less than what is required and supplement it with a miniature ten turn pot, which on the surplus market is relatively inexpensive. That way, you will have an even more precise resistor combination than you could get by ordering it.

Although I made my DVM on a printed circuit board, a perfboard with sockets will do just fine, as parts layout is not really critical. One precaution, though: Try to keep wires away from the clock resistor and wave-forming circuits. Now, the first time I tried the circuit, it didn't work. Very understandable, as Murphy makes his permanent home of record on my workbench. Well, after many hours and wonderings as to the state of my sanity, I came to the conclusion that I was doing something wrong. What an understatement! This is where I found that, unlike with TTL devices, one cannot leave unconnected leads unconnected. Due to the extremely high impedance of these CMOS devices, you must tie the unused leads to a high or to a low. Look at the truth tables for this. This circuit can be used with LEDs or LCDs with some changes, but in the interest of the local economy (my wallet), I decided to go with the popular FND-70 common cathode

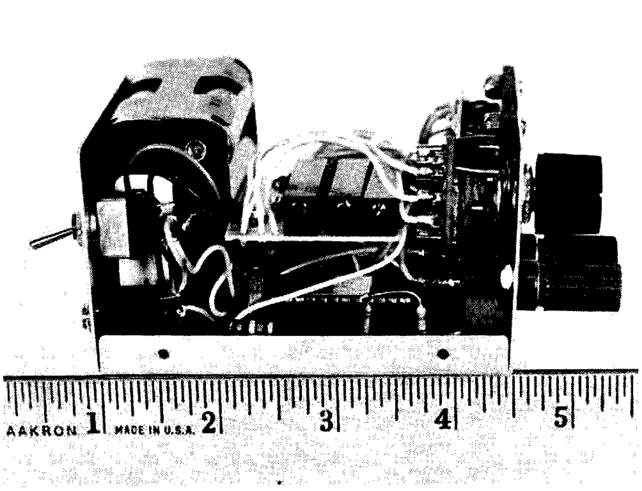

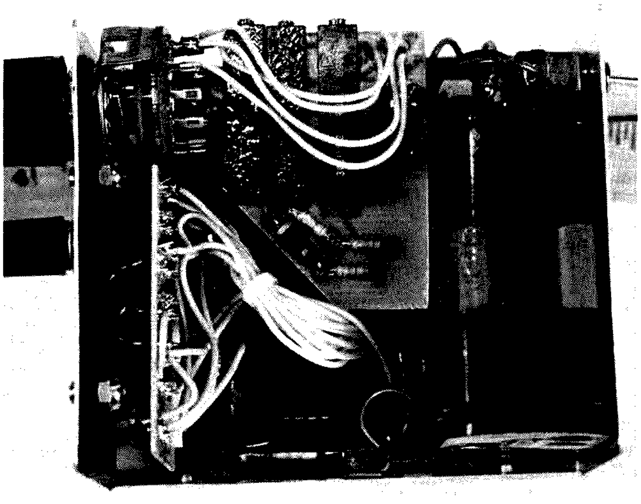

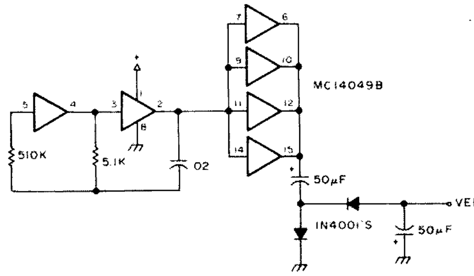

Fig. 4. Another method of obtaining a negative supply from a positive supply. When only +5 volts is available, a negative supply voltage can be generated with this circuit. Two inverters from CMOS hex inverter are used as an oscillator, with the remaining inverters used as buffers for higher current output. This square wave output from the oscillator is level-translated into a negative-going signal. This signal is rectified and filtered. A voltage of +5 V will result in a -4.3 V output.

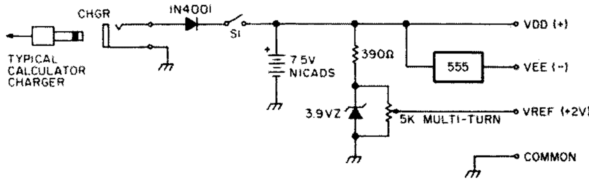

Fig. 5. Voltage chart. Total power requirements are approximately 60-70 mA.

LEDs.

More about printed circuit boards. Double-sided PC boards with plated-through holes are available, and the price will be in the vicinity of 4 to 6 dollars (it hasn't been decided yet). This board has provision for a few more frills than the article described, and the price of a kit using that board sells for $39.95. Write for details to Dactron, Inc., 12609 Blackfoot Trail, Round Rock TX 78664.

Calibration: The first thing to do in the way of calibration is to set the 200 mV reference voltage (or 2 volts, depending on which option you take). Do this with any accurate meter or another DVM, as the accuracy of the DVM depends upon this setting. Next, with an ohmmeter, set the value of your resistor strings to equal the required resistance, e.g., 5 megohms with a 5 meg pot for the required 9 megohms. Do this with all the resistors. When you have adjusted these to their approximate value, insert them into the circuit. Now you can fine tune the pots to the exact value. Note that when you adjust one pot, it will affect the values of the other ranges. This may take a while, but when it is complete, you will have a very accurate voltmeter.

Operation: This is the easiest of all. All that is required is that you feed it the voltage commensurate with the range it is in. While other common voltmeters can take a few "prangs" with the meter movement, do not try to measure 150 volts with the switch in the 2 volt range, for if you do, you will find yourself ordering another MC14433.

Well, that about wraps it up. Other plans which are in the mill are an autoranging, full function DVM, and the incorporation of LCDs for a micropower VOM.

My thanks go out to Joe Magee WA5ACA for his technical expertise and moral support, and Bert Mau WB5UBR for his excellent photographic work. ■

AMSAT

AMATEUR RADIO CLUBS OF THE JPL AND HUGHES AIRCRAFT COMPANY TEST FLY AMSAT AO-D MODE J (JAMSAT) TRANSPONDER OVER SOUTHERN CALIFORNIA

For an hour and a half, Booth Hartley N6BH piloted his Beechcraft Bonanza over Southern California on November 5 carrying a prototype model of the AO-D Mode J transponder. Booth is a member of the JPL Amateur Radio Club. Maurice Piroumian WA6OPB, a member of the Hughes Aircraft Company Amateur Radio Club, also aboard Booth's plane, operated an Echo II 432/435 MHz KLM transceiver to monitor the output of the Mode J transponder. The flight was in preparation for the full-scale all-day test flight to be held on December 3, 1977. The December 3 flight was to have covered all of the state of California, starting from Van Nuys Airport early in the morning. It was to go on to San Diego, then north to Palo Alto where the fliers were to stop for luncheon and refueling. After lunch they were to continue to Sacramento and then return south through the inland valleys to Van Nuys Airport.

Just before the flight on November 5, tests were made on the ground with Skip Reymann W6PAJ (JPLARC) and Gene Halaas WB6GSP of Van Nuys, transmitting SSB signals on 2 meters through the transponder. Norm Chalfin K6PGX operated FM through the transponder, transmitting on 2 meters from a new WE-800 Wilson. The transponder output was received on an inexpensive battery-operated portable tuned down from its nominal 450-470 MHz commercial band operation.

The JAMSAT transponder beacon was keyed by a PROM-operated keyer putting out "Hi, Hi, Hi, Hi, de WA3NDS AA 4." The keyer was built by Dick Ulrich K6KCY. Dick was to have been aboard the plane also, but was grounded by a strep throat. He did manage, however, to complete the equipment modifications necessary for the flight despite his discomfort. Dick is a member of the JPL club.

At the QTH of Don Bostrom N6IC on November 5, there were three ground stations set up:

John Dessel WA6JML operated the downlink position, receiving signals in the 435.125-435.140 MHz band from the airborne transponder on a Kenwood TS-820 equipped with a Hamtronics 435 MHz converter.

Elliot Oseas WA6KGN operated the uplink position using a Kenwood TS-700A for transmissions in the 145.890-145.905 MHz range.

Dick Handlen WA6SLB maintained ground-to-air and air-to-ground communication via a 220 MHz repeater, WR6AJI on Mt. Wilson, using the Midland 13-509.

Don, John, Elliot, and Dick are members of the Hughes club. Tom McInnes WB6ZEB, President of the HAC club, and Sam Weise, another member, set up and maintained ground station antenna facilities which included beams, ground planes, and vertical units.

John Swancara WA6LOD and John Gerlach K6BRD, also of the Hughes club, also participated in the operations.

Dr. Sandra Bostrom (Don's XYL) provided a delightful buffet. Also in the wings was Mrs. Nancy Reymann, Skip's XYL.

About 10 calls were heard in the narrow passband during the very short flight. On the ground tests of the Mode J transponder at the airport, Skip reported that the bandwidth was 18 kHz.

Calls heard were: WB6GSP (SSB), W6PAJ (SSB), K6PGX (FM), W6LO (SSB), W6TCQ (SSB), W6XT (CW), N6IC (SSB).

There were no interfering signals heard aboard the aircraft or on the ground and no interference was reported from the transponder to other amateur services.

Tracking the Hamburglar

RIPPED OFF: Regency HR-2B, registration number 2200-363 engraved on the left front side, speaker terminal strip replaced with mini-plug. Transceiver was bracketed to an AR-2 Regency amplifier. If seen, notify Sandusky Police Dept., Sandusky OH 44870, or call Earl Carrier K8WLP, (419)-625-1817 collect.

STOLEN: From the Cornell University Amateur Radio Club: Heathkit SB-220, serial #139137602; Drake R-4B, serial #7567B; Drake T-4XB, serial #18678; Drake AC-4, serial #38777. Equipment is identified as property of the Cornell ARC by engraving on back of each unit. Anyone with information should contact Phil Karn WB2AJX, 112 Edgemoor Lane, Ithaca NY 14850, (607)-272-2747.

STOLEN: Heath HW-2036 2 meter transceiver. SS No. etched on back. Contact Bobby Sorrow WA4GBM, 130 Sunset Dr., Athens GA 30606, (404) 548-6691, or the Athens police, (404) 543-1431.

E. Doren WA6THG
6218 Calle Empinada
San Diego CA 92120

Clean Up Your Touchtone™ Act

—with Clean Gene's touchtone machine

Once repeaters were on the air, it was only natural that someone would come along and dream up the autopatch. Basically, the autopatch decodes the received two-tone signal and, receiving the correct combination of tones, switches a telephone touchtone™ line into the repeater.

Here in San Diego, the accepted procedure for accessing the machine is first to identify yourself and then to depress the star (*) button on your pad. This action takes a combination of two tones from the pad and transmits these tones to the waiting autopatch facility. The decoder in the autopatch determines if the tone combinations are the correct frequencies and, if they are, proceeds to bring up the phone line into the repeater transmitter. You hear the dial tone, which indicates a successful access, and then proceed to punch up the seven digits required to make your call. Upon completion of the call, the pound (#) button is depressed, which clears the patch facility. All very clever, all very neat, if you have the necessary touchtone pad or two-tone generator and a suitable means of properly injecting the signals into your rig.

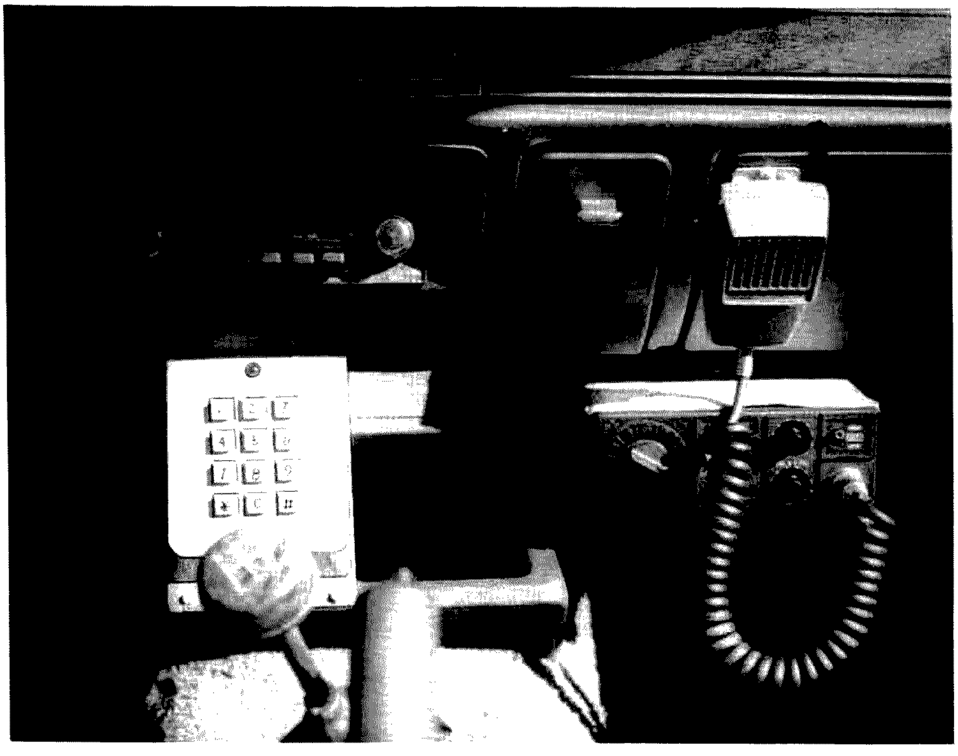

Although there are various commercial units designed to interface into most transceivers on the market, they all suffer from one terrible problem. They're expensive! The expense varies from $50 to $100 and perhaps more. I was fortunate to get a Western Electric #35NIA pad and, with this, proceeded to build my own unit.

I use an Icom 22A in the car on two meters. It's a nice rig, but in the past, I was unsuccessful in using a commercial combination touchtone/microphone pad with it. All reports said the mike was beautiful, but I learned, after many unsuccessful attempts at bringing up the autopatch, that the low frequency tones just weren't getting through with enough level.

I pulled the Icom out of the car and sat down at the bench. Examination of the diagram showed the mike preamp stage to be an IC followed by a deviation set control, a low-pass filter, and an interstage transformer. From here, through a .02 uF coupling capacitor, the audio

is fed into the phase modulator. The IC also acts as a clipper circuit and is quite effective. However, you must be very careful in not clipping or limiting the two-tone signal from your touchtone pad, because the autopatch just won't work with this kind of distorted signal.

I decided that the best place to inject the two-tone was after the mike preamp stage, but that .02 uF coupling capacitor bothered me.

Pulling out the trusty SR-52 calculator, I learned that the capacitive reactance of that .02 uF capacitor was a staggering 11,417 Ohms at the lowest touchtone frequency of 697 Hz. It's a small wonder that the low frequencies weren't getting through. A few more rapid calculations showed that a .33 uF or .47 uF would do the trick. I choose what I had in the junk box and used the .47 uF unit. Things began to click. (See Fig. 3.)

Now that I had the problem in the Icom 22A resolved, I turned my attention to the pad. I had decided at the start that feeding the touchtone signals into the mike left much to be desired, what with the clipper action and all. This dictated, then, that the signals must be injected directly into the phase modulator, bypassing all the mike preamp stages. This required a high impedance driving source from the pad so that impedances in the transmitter would not be upset. An isolation stage was called for.

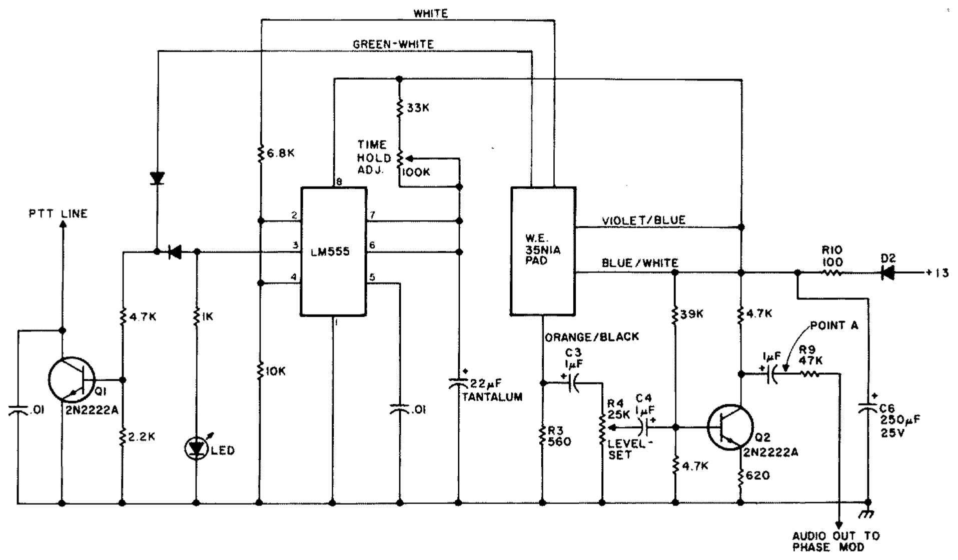

Fig. 1.

Circuit Description

The audio out of the touchtone pad is developed across the 560-Ohm resistor, R3. A 1 uF coupling capacitor, C3, isolates the dc component from the pad and feeds the two-tone audio across the 25,000-Ohm level-set control R4. From there through C4, the audio is fed to the base of the amplifier/isolation stage utilizing a common 2N2222A. This transistor is a very inexpensive unit, generally available for 15¢ to 25¢. It is silicon and, in this application, should be literally indestructible. With the 47,000-Ohm build-out resistor, the output impedance is around 52,000 Ohms. This allows paralleling the stage directly across the phase modulator without the use of switches.

Meanwhile, back at the pad, I discovered that the white wire leaving the pad had full battery voltage on it until a button on the pad was depressed, at which time the voltage was switched off. This voltage, switched low, provides the necessary negative pulse required to trigger the LM555 timer chip into its timing period. Release of the button on the pad pulls the trigger pin back to its high state, thereby completing the formation of the negative trigger pulse. The setting of the 100k pot combined with the 22 uF tantalum capacitor determines the timing period of the 555 chip. It is imperative that the 22 uF capacitor be a tantalum unit for lowest leakage and stability. While "on," the timer chip's output at pin 3 goes to full battery voltage. This voltage is used to light the LED, visually indicating the timing period, and, in addition, is used to saturate the second 2N2222A transistor used as a solid state switch across the push-to-talk line. Who wants mechanical relays when a nice 15¢ transistor can do a better job? This 2N2222A can handle a maximum of 75 volts at 800 mA and is more than enough to satisfy the requirements of switching today's solid state transceivers. I find that hold-in time for the timer chip seems best around two seconds or slightly shorter. This provides enough time to depress one button after another on the pad without the transmitter being continuously keyed on and off between digits. The LED could be omitted for the sake of simplicity, but I like gadgets and blinking lights. The combination of R10 and C6 provides decoupling from the auto electronics and effectively removes any spikes or transients from the incoming 13 volt line. D2 acts as a steering diode and simply prevents any possible damage to the pad or electronics should battery voltage be reversed. It seems always better to be safe than sorry.

There is nothing critical at all in the circuit, and it should work the first time, barring cockpit errors. Neither is there anything critical in its layout. I put mine into the same box with the pad, using a small piece of vector perfboard. Using parts and values shown, the unit will deliver more than 10 volts of very clean undistorted audio at the collector of the amplifier/isolation stage. This should be more than enough audio to drive the modulator of most transmitters directly. It should be noted, however,

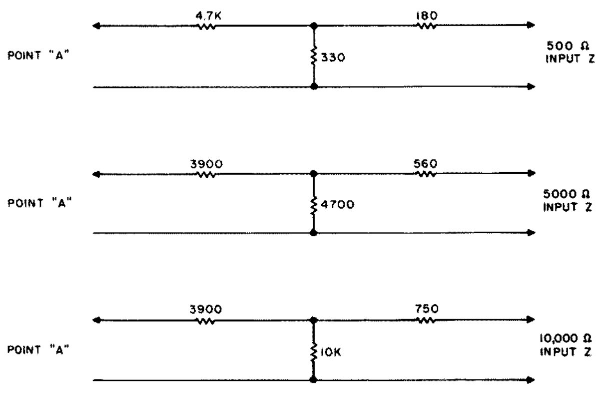

Fig. 2.

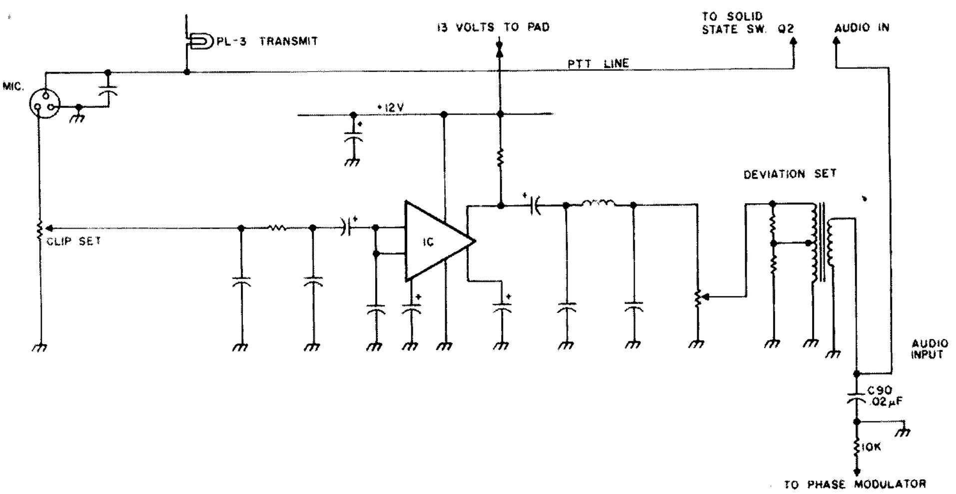

Fig. 3. Icom 22A mike preamp stage. C90's value is changed to .47 uF, and the touchtone audio is injected as noted.

that the 47,000-Ohm built-out resistor used to provide the high impedance to the transmitter will drop this voltage to something less than the abovementioned 10 volts. The procedure I used was to first select the point of injection into the modulator and then, speaking in my normal voice into the station mike, measure the peak-to-peak audio voltage on a scope and set the two-tone level at the output of the 47k resistor while coupled into the transceiver at slightly less than voice modulation. This is perhaps the safest and most foolproof method of initial setup. However, should a scope be lacking, simply start with the level set control in the pad amplifier at zero and begin depressing the necessary access button on the pad while slowly bringing up the audio. It shouldn't take more than a minute to determine what audio level your local autopatch facility likes. There will generally be someone on the frequency who is more than eager to help you.

Care should be taken, however, not to overdrive Q2 or the following modulator stage in your rig. Most autopatch facilities don't seem to work well when receiving overdeviated signals.

A few final comments are worth noting. It has been observed, on the San Diego machine, that many people experienced early difficulties. For proper operation, remember that your transmitter must be on frequency, the two-tone frequencies out of your pad must be precisely correct, and, finally, the deviation of your transmitter must be correct or slightly on the low side.

With a frequency counter, I measured the output frequencies of the Western Electric pad. I found min. to be within 3 Hertz in the worst case on the 852-Hertz tone. This tone has a tolerance of ±13 Hz, so it can readily be seen that Western Electric did their job well. Should you find it necessary to adjust your generated frequencies, do so with extreme care. Generally, it is safe to say that unless you suspect someone else has been there before you, it is best to leave well enough alone. The slugs in the Western Electric toroids are adjusted with a special triangular tool, not usually available to the common ham. Trouble occurs when you get overzealous with a pocket screwdriver on the tuning adjustment of the toroid. The results are usually a broken core. If it works the patch, leave it alone.

Although it is not recommended, this unit can drive a mike input stage by eliminating R9 and inserting a suitable attenuator pad between point "A" and the mike input. Shown in Fig. 2 are the values to match the touchtone amplifier output to 500-Ohm, 5,000-Ohm, or 10,000-Ohm input impedance on your transmitter.

Although the values shown for the attenuators are not exact, they represent the closest standard value resistor. The slight difference in values will never be noticed. The pads were designed to take a nominal 7.5 volts of audio at the collector of the amplifier/isolation stage down to 350 mV. This 350-millivolt figure is a ball park value. Should your transceiver need more or less audio, this can be derived by trimming with the level-set control on the input of the amplifier/isolation stage.

Low frequency group				
697 Hz	1	2	3	
770 Hz	4	5	6	
852 Hz	7	8	9	
941 Hz	*	Ø	#	
	1209 Hz	1336 Hz	1477 Hz	High frequency group

Table 1. This should help you visualize exactly what frequencies are generated as each button on the pad is depressed. Remember that the pad is a two-tone generator. For each button depressed, one tone from the low-frequency group and one tone from the high-frequency group are transmitted. For example, depressing Ø will generate 1336 Hz plus 941 Hz. Depressing 6 will generate 770 Hz plus 1477 Hz.

General Notes and Comments

The 2N2222A transistor can be replaced with the following devices: 2N2222, 2N2540, TIS109, TIS111, TN3904, GE-20, HEPS0015, HEPS3001, and ECG 123A.

The total current drawn by the unit is less than 20 mA. About 8 mA of this total current is drawn by the LED when it is lit. The diodes used as steering units are general-purpose silicon. I used 1000 piv at one Amp, only because it is what I had in the junk box. With the exception of D2, all diodes could be 1N914s. D2 should be a silicon unit, and 100 piv would be more than enough. All resistors are ¼ Watt, simply to keep the size of the project down to a minimum. Consideration was given to a small amplifier driving a tiny speaker so that I could hear the tones as they were being keyed up. The idea was discarded due to lack of space within the pad enclosure. As shown in the photo, the pad is mounted outboard of the transmitter with a short 4-conductor cable interconnecting the units. This arrangement of the pad being permanently mounted to the dash is a far better arrangement than any hand-held device. Hand-held units require two hands to operate and, on a fast freeway or city street, can create many problems for those attempting calls while driving. Less the price of the pad, this device could be built for under $7.00, including the price of the enclosure. Local hams have remarked on the "bell-like quality." This, I feel, is the result of doing things right and feeding clean undistorted tones directly to the modulator. Try my method. I'm certain you'll be pleased. ■

Dan Kernan WA2KOK
Rt. 1 Box 310 Front St.
Vincentown NJ 08088

The Tempo 2020

—satisfaction tells all

While it seemed that Kenwood and Yaesu were in tight competition to grab your ham radio dollars, along came Henry Radio with a new offering, the Tempo 2020. Having owned the Tempo One for about five years and feeling it was a great value for the money, I was very much interested in the *73 Magazine* advertisements of the 2020. I became even more interested when a local ham visiting the shack offered to take the old Tempo One off my hands for a good price. While I hated to see it go, on one hand, on the other hand I had been enticed by the ads for the new rig. The deal was made and the purchase of the Tempo 2020 completed a few days prior to the 1976 ARRL November SS phone weekend.

For the uninformed, Tempo is a name Henry Radio places on a number of pieces of electronic gear marketed by them, some imported, and some manufactured in the U.S. The original Tempo One was in fact an undercover Yaesu FT-200. The new model 2020 is manufactured by Uniden. A telephone call to Henry Radio on the west coast prior to the purchase of the new rig revealed that Uniden was big in the radio business in Japan but has not yet received wide recognition in the States. This fear of the unknown, as it were, may cause some unnecessary shyness in making the purchase. I think this article will arrest any of the fears you may have.

Rather than duplicate the instruction manual and specifications in this article, I think it best to focus on the main features of the rig.

PLL Circuitry

The unit employs modern phase locked loop (PLL) circuitry. This allows accurate frequency determination without introducing the spurious signals common in many amateur transceivers. The receiver is the single conversion variety offering excellent protection against unwanted cross-modulation.

Hybrid Dial Display

A glance at the dial display may lead you to believe it has a full digital readout. A slight movement of the tuning knob will confirm that this is not the case. The dial, in fact, offers a combination of digital and analog on its display and could be said to give the best of both worlds. To break this down a bit further, you will see the first full MHz and the first number after the decimal point on the digital display; the remaining numbers in the display appear on the mechanical drum dial. Example: 14.230 MHz – the 14.2 is digital and the 30 is on the mechanical dial drum. The five push-buttons in the lower right of the panel select the digital range after the bandswitch has been set to the desired band in the conventional manner, the dial drum being used to control the last 0 to 100 kHz.

Although this may sound a bit complicated, you soon find yourself going from one frequency to another with the speed of a quick change artist. A two speed tension control lever on the main tuning knob allows for a smooth rapid tuning rate or slower tighter control, the latter being more desirable for mobile operation. I might voice one of my few objections here, that is, the lack of a spinner type control knob.

VFO Stability

On-the-air tests in the receive and transmit modes indicate an extremely stable and linear VFO. The VFO circuit employs FET design and is buffered to prevent instability from mechanical shock or environmental changes.

Receiver Selectivity and Sensitivity

The receiver is rated at a fantastic 0.3 microvolts for a 10 dB (signal+noise) to noise ratio at 14 MHz for SSB and CW. In the absence of accurate test instruments, I can assure you after some 200 contacts in the November SS contest, it is indeed very sensitive with even the weakest signals being heard quite easily with the rf gain and rf attenuator turned down as much as 75%. At the peak of these contest operating conditions, the receiver never once exhibited any cross-modulation or intermodulation problems even on the strongest signals. The receiver employs dual gate MOSFET transistors and separate and shielded transmit/receive rf circuits.

Receiver Incremental Tuning

The 2020 has a dual range RIT control allowing for ± 5 kHz or a narrow ± 1 kHz variation for fine tuning of the received signal. A small red LED located near the control indicates when it is activated.

Final Amplifier Section

With the exception of the final amplifier section, the unit is completely solid state. The final amplifier employs a 12BY7A driver and a pair of 6146Bs in the final rated at 120 Watts nominal PEP output on SSB and 100 Watts nominal dc output on CW. The nominal dc output on AM is 25 Watts. The built-in cooling fan results in a cool running final and no doubt contributes to extended tube life. The final amplifier section is well shielded in its own compartment.

General Features

The 2020 contains its own ac/dc power supply and comes with a hand-held mic and built-in speaker. The 25 kHz calibrator is standard. There are provisions for external frequency control with the model 8010 external VFO, which also contains provision for 10 fixed channel positions and an additional dual range RIT control. There is a separate power switch for the heaters for a mere 28 Watts of power with the heaters off in the receive mode. The unit offers a choice of VOX, manual, or push-to-talk control with an accessory socket for a foot switch if desired. Living in a rural area and not having done any mobile operation, the performance of the built-in noise blanker has yet to be evaluated under high noise

conditions. The front panel adjustable AGC control works well in all modes or can be shut off for weak signal reception. The bandswitch has two receive only positions for 15 MHz and the 11 meter band. There are provisions on the rear for low power output for transverter use and, in fact, my Yaesu FTV-650 6 meter transverter performs very well with the 2020 and the aid of an external power supply. All the major circuitry is constructed on 15 separate circuit boards with accessibility being enhanced by a fold down front panel.

Summary of Operation and Performance

Were I to sum up this unit in a word, that word would have to be unique – unique in that the unit performs without a hitch on all bands flawlessly, as experienced by the 24 hour contest weekend operation. It is unique in the features that are standard on the rig when you take it out of the box.

One of the most impressive of these is the built-in 600 kHz CW filter which has me back working and enjoying CW more than I have in years. This feature should please even the most demanding brass pounder. This unit is a pleasure to operate, the controls are well thought out and well located, the knobs are made for man size hands, and the unit is a bit larger (14.75" wide x 6.5" high x 13.25" deep) and heavier (39.6 lbs.) than most other units in its class, giving it a good solid look and feel which seem to have gone out with the passing of some of the old boat anchors of yesteryear. This is the point in the article on new products where the writer finishes with the negative features concerning the operation and/or performance of the shiny new box. Well, I must apologize, for I have yet to discover them. ■

Looking West

from page 26

taken is not to your liking, then the only one you can blame is the guy in the mirror.

AGAIN ELMO

I think I received the following information last month – that there was a new open two meter system in New Jersey and that the caller was WA2DW?. The answering machine cut him off, so I really cannot be sure. The reason I bring this up is that a number of you who have tried to leave a message for "LW" did not heed the specific instructions I gave as to how it must be done. Let me review once again. When Elmo answers, you will hear me with a fifteen-second message. This is followed by a tone. As soon as the tone stops, you will have exactly fifteen seconds to leave your message. The best way to do this is by jotting down on a piece of paper what you want to say prior to making your call, especially if it's long distance. When you hear the tone, and after the tone stops, start with your name and callsign, and then give your message. When you hear the second tone, the time is up. If you have something very significant that will take longer than fifteen seconds, leave a telephone number so that I can call back. However, if you speak quickly and distinctly, there is a lot of information that you can leave in fifteen seconds. The fifteen-second time limit is not of my choosing. That's the way Elmo operates, and though I have tried to slow him down, so far I have met with little success. For those interested, he is a magnetic disc-type machine manufactured many long years ago. I think his age makes him a bit ornery, but after trying many of the new cassette-type units, he still is far more reliable than anything else I have come across to date. The "LW Hotline" number is (805)-259-8243. It's good 24 hours a day, seven days a week.

My thanks to WA2DW? for trying. If you drop me a note with the information, it will be used here in Looking West.

"SOLAR POWER ON A HILL" DEPARTMENT

WR6AUG is an open 220 repeater. Fact is, AUG has been around for some time now. However, of late there is a difference in AUG that will probably interest you. About three months ago, WR6AUG became the first Southern California repeater to go total "solar power."

Now, this is not the first repeater along these lines. There have been at least two other systems which have done similar experiments. If memory serves me correctly, one was in New Mexico and the other in Colorado. Both were two meters. As to whether either is still operational, I cannot say. Maybe some of those involved in the original New Mexico and Colorado systems will read this and let me know.

What sets WR6AUG apart from the others is its final site and the band upon which it operates. While presently still in test mode at a temporary location in the Hollywood hills, the plans call for moving WR6AUG to a remote mountaintop, one not served by any power company. According to Joe Schullman K6BWA, who, along with Sam Davis WA1GQY/6 and their remote/base group, designed and built the AUG system, while there are many good potential repeater locations throughout this area, the best ones have never been utilized because the necessary electric service was not available. Some mountaintops have the ability to talk half the state and then some, but a system operational on battery power would be short-lived and not worth the effort. The obvious answer is to solar power such a remote installation, but, until recently, the cost of the most necessary portion of such a system, photocell panels, was beyond the pocketbook of most amateurs.

However, Joe's group lucked out. A company in Chatsworth, California, Arco Solar Technology Incorporated, showed its willingness to partially donate a number of "imperfect" panels to the AUG system. As Joe explained it, the panels worked perfectly, but were best termed "seconds" since some had slight discoloration to the cell structure. They would not meet spec for space travel, but for an amateur repeater installation they were a godsend. By utilizing low current CMOS technology for all control functions and by incorporating a touchtone-controlled user turn-on and turn-off of the overall system so as to minimize standby current drain, a complete 10 Watt repeater package was built and is currently in final test.

Joe Schullman K6BWA with WR6AUG solar panel test.

The repeater itself is built from what has proven to be one of the best bases to start from – the Uniden (i.e., Midland 13-509/Clegg FM-76/Cobra 200) series of 220 MHz radios. Virtually every Southern California 220 MHz repeater in current operation has had this as the generic starting point. While there are some exceptions, in general you will find that one of the aforementioned radios was the main building block. Dollarwise, 220 radios are probably the best buy to be found in amateur radio today.

Operating WR6AUG is only slightly different from any other repeater. As stated earlier, AUG is tone access, but it is an open repeater. The touchtone access system is to conserve power, not keep people off. What you need is a 220 radio of your own, a touchtone pad, and a pair of crystals for 223.24 in/224.84 out. You simply key up, hit the *, and make your call. When finished, you hit the # and turn off everything but the decoder and receiver. This is to prevent random kerchunks and keyups that would shorten the usable time of the system. At present, Joe tells me that AUG is capable of a total of six hours combined transmit/receive duty time daily. Since the solar panels are used to charge a rather high capacity sealed electrolyte automotive battery, system operation is not limited to daylight hours. However, when using the system after dark, it should be remembered that there will be no recharge until daylight again appears. In other words, keep it short after sundown.

It seems that something new and different takes place out here daily. While WR6AUG is not exactly a first for solar power, it is for a full-time 220 MHz open system.

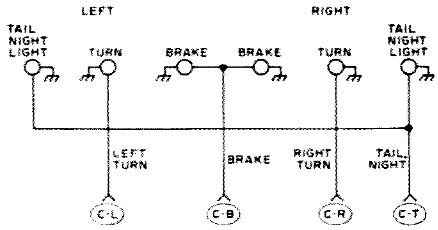

Fig. 1. Typical European car rear light system.

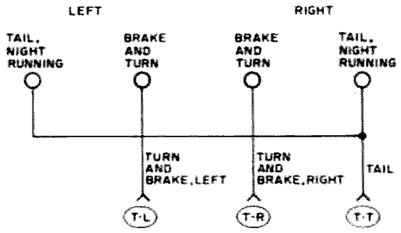

Fig. 2. Typical light trailer rear lighting system.

The Trailer Light Solution

—a diode interface for German cars and U.S. trailers

George R. Allen W1HCI
80 Farmstead Lane
Windsor CT 06095

Most people at one time or another have had reason to rent a trailer from one of the national rental companies or else tow their own trailer. Usually the trailer is hooked to the car and the trailer lights connected without difficulty. Without difficulty, that is, if you have an American car. If you have a European car such as a Volvo, VW, etc., you have a problem. With most European cars you have separate brake lights and separate turn signals (Fig. 1); with American cars and trailers, the turn signals and brakes operate using the same lamps (Fig. 2), producing incompatibility.

I might mention that I have never been refused rental of a trailer even though the lights on the Volvo don't match up with the lights on the trailer. Instead, I've gotten the trailer and, in addition, the verbal solution of "you really don't need turn signals, we'll just hook up the lights." This approach works until you get caught.

Of course, rental trailers are not the only trailers with lighting systems which are incompatible with European cars. Most boat and camp trailers cannot be properly connected to European cars unless an additional light is attached to the trailer. The circuit described in this article provides a simple means of interfacing the European car lighting system to the lighting system on the average trailer. It can be built for less than $3 and can be connected to your car in minutes.

How It Works

Diodes perform the magic in this simple adapter. Diodes are used since they will conduct current in one direction only. Thus they will provide a one way path for current. Diodes D3 and D4 provide a one way path from the car brake wire to each turn signal light. When the car brake is on, the brake lights on the trailer will be on. Since the diodes permit current to flow in one direction only, the turn signals will not interfere with the brake lights on the car. If these diodes were not present, the two turn signals would be shorted together and, in addition, the brake lights would come on when either turn signal was turned on. Diodes D1 and D2 provide a one way path for the turn signals. If these diodes were not present, the turn signals would light when the brake lights light. Use diodes with a minimum 3 A 50 piv rating.

Note that diodes are not perfect conductors in the forward direction. Each diode will have a constant voltage drop of about .7 volts across it when current is passed through it. (You can check this by measuring the voltage across D3 with the trailer lights connected and the brake pedal pressed.) If the normal voltage from the battery with the motor running is 14 volts, the voltage at the trailer lamps will be 14 V less .7 V drop or 13.3 V. The loss in bulb brightness is insignificant for a change from 14 V to 13.3 V.

An alternate solution is to use a series of relays wired to perform the proper function in place of the diodes. Relays are expensive and turn out to be a rather complex solution.

Construction

Construction of this little adapter is not critical at all. The diodes do not get very warm in this application, so it is not necessary to mount the diodes on heat sinks. For my adapter, I mounted all four diodes on a thin piece of plastic sheeting, such as a piece cut from a plastic saucer or plate. I then wrapped the entire unit in a large ball of plastic electrical tape to insulate it and make it waterproof. It looks sloppy (hence no picture), but it works fine. I let the wires hang out of the ball about 18" and labeled them as shown in Fig. 3. Use #16 or larger insulated stranded wire.

Installation

Installation is simple if you use the little gadget as shown in Fig. 4. This device is a simple test lamp for use in determining which wire goes to which light in the car. To use the test lamp, connect the ground clip to a good ground point on the car, such as a point on the frame which has bare metal showing. Find the wiring harness in the trunk which connects to the lights. Turn on the taillight and

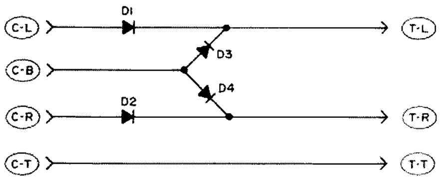

Fig. 3. European car/trailer light adapter.

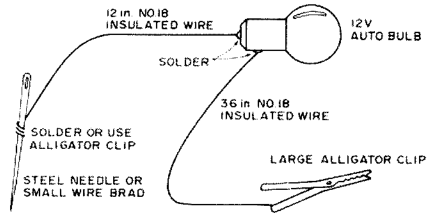

Fig. 4. Test lamp.

stick the pin into the wires one at a time until the bulb lights. Label this wire with a piece of masking tape "C-T". Repeat this procedure with the turn signals and the brake line. Make sure that you label all wires as shown in Fig. 1. From the trailer agency or the trailer manufacturer, find out the connections for the trailer lights and label these connections as shown in Fig. 2. For final hookup, merely match the labeled wires on the adapter to the corresponding wires on the car and the trailer.

Once your unit is built and installed, it requires no maintenance. I built my adapter three years ago and have been using it ever since to connect the lights on our Volvo to the lights on our Coleman camp trailer. ■

LETTERS

from page 11

tically impossible to form a microcomputer fan club in my home town.

But, being a radio ham, I wonder if there is any group or club that meets on the air to discuss microcomputer matters and interchange information. I am sure that many foreign hams may have a similar interest. I wonder if you have knowledge of the existence of such a group or could put a question regarding this in *73 Magazine*.

I am personally active almost every day around 21,350 kHz between 22.00 and 23.00 GMT. I also operate on 10 and 20 meters.

Hans Seemann CE1NF/CE1HB
P.O. Box 24-D
Arica, Chile

JEFF AND JEFFERY

In *73* for November, 1977, you have referred to "16-year old Jeff of Jefftronics."

Jeff-Tronics is a registered trademark owned by Eugene L. Jeffery. Jeff Rose, to whom you referred, is not connected in any way with Jeff-Tronics. I would appreciate it if you would make this known to your readers.

Eugene L. Jeffery
Cleveland OH

Picky-picky. — Wayne.

ESPECIALLY DOTTY

This letter is on behalf of my father as well as myself. We recently moved from Chicago to Bedford NH, and since our move we had not been receiving *73* since August. My Mom placed a call to you while I was in school about 2 weeks ago, and thought you were very nice. Anyway, you connected us with Dotty Gibson. She was very pleasant and helpful, and said she would send out our missing issues by UPS the next day. Well, that was just fine. I had waited this long and could wait a few more days. Then, she really surprised us by offering to drop them off at our house, as she was going shopping out our way.

What can I say, except that we were very pleasantly surprised. I don't think we can thank you — and especially Dotty — for going out of your ways to help us. My father and I both thank you and appreciate it very much. With such great service, I hope it won't be too long before I can subscribe for life (if you still have life subs). I am 16 and plan to live for a few more years and don't plan on being on a bomb squad or a sky diver!

Rob Nelson WB1FNO
Bedford NH

BAD GUYS?

After 15 years of supporting the ARRL and most of its policies and considering you somewhat of a "devil's" advocate," I finally have had it with *QST* and the League. In asking a question about their September editorial on ham gear sale control, I ran head-on into what I feel is inexcusable arrogance and barely disguised contempt for anyone who questions headquarters. My first two letters were completely ignored and the answer to the third (after I told them they had seen the last of my money and support) was answered by nitpicking the terms I had used in my letters and, in a very transparent manner, still avoiding my original question as to who the "bad guy" manufacturers were.

This and the "no-good-because-we-didn't-suggest-it" attitude on repeater deregulation have convinced me the League and *QST* are now one and the same and represent the *QST* advertisers rather than me as a ham. I therefore am willing to let *QST* finance themselves through ads without my help. The money I saved by my rebellion is enclosed for my first ever subscription to *73*.

Keep the RTTY articles going — I bought your RTTY issue off the shelf.

Tom Hill WA4ECB
Cocoa Beach FL

No wonder QST *didn't want to answer your letters . . . that would expose their "crusade" for the fantasy it really is. There are no bad guy manufacturers . . . and only a handful of unprincipled dealers who have been reselling ham equipment to CB dealers for the CB market. This market has almost dropped dead right along with CB sales, so the whole thing is just demagoguery. Even the FCC admits that there is no significant problem with CBers coming into the ham bands . . . but this is such a strong emotional issue with many hams that* QST *has deliberately used it, knowing that it is a fake issue. Sadly, thousands of well-meaning and sincere hams have been sucked in by this latest* QST *ploy. — Wayne.*

IMPRESSIONS

Well, my first year's subscription to *73* is just about up, and I thought you might like to know what I thought about the magazine. I wonder if what I'm about to say is on other minds, too — impressions about the magazine and the people who read it.

I like your idea of a large letters section. It's a good source of information and opinions from guys from all over on pertinent (and some not-so-pertinent) topics. It's always one of the first things I read when I get the magazine. But why doesn't Wayne answer the questions anymore? Not that I mind John Molnar, but I was just wondering.

Whatever happened to the "Ancient Aviator" by Green, Sr.? That was a nice touch. Hope nothing happened to him. Same with the guest editorials. Same with the I/O editorial and report.

Speaking of the I/O section: For heaven's sake, guys, don't let it die! It's dangerously close now; don't let it go all the way. Computers are in our future. If *73* doesn't carry the information, who will? I doubt that "other magazine" would. There have been some great articles in that section (I especially liked the one that had a program to decode OSCAR telemetry); keep it going.

As for the rest of the articles, there was always something worth reading in every issue. Although I'm not active in some aspects of ham radio, there are articles which are easy to read and valuable when and if I decide to get into that stuff.

In fact, I've found that most, if not all, of the articles in *73* have a light, easy-to-read tone that makes it worth going through again. I read that "other magazine" when I want to take a nap.

By the way, I'm renewing for 3 years.

Mark Herro WB9LSS
Oconomowoc WI

Bad enough you have to read my editorials without your provoking me to waste space on the letters pages. Now, about I/O . . . no, it shall not die. For some reason, Kilobaud *seemed to drain the input of microcomputer articles during the past year. Now, with several months of computer articles in hand for* Kilobaud, *we are beginning to have more material for 73 along this line. With a lot of readers getting both magazines, it seemed to me to be unfair to print the same articles in both, so there has been no duplication. Ancient Aviator Green has been promising for several months to get back to his typewriter. You can bet that he is being reminded frequently, since many readers have been after us for more. — Wayne.*

H.O.L.K.A.R.

I want to bestow upon you the Honorable Order of Leaders of Knowledge of Amateur Radio. Being a

Continued on page 83

William F. Jordan WB4NAY
422 North Ride
Tallahassee FL 32303

Repeater Procedure

—you haven't tried one yet?

It was natural that as amateurs moved into the VHF and UHF repeater frequencies, they carried with them many of the procedures that proved useful on the lower bands. The habits were (and are) hard to break, but are often disfunctional when applied in repeater operations. The objective of this article is to discuss some of the unfortunate practices occurring in the repeater spectrum and to offer some suggestions which might render repeater operations more functional.

The low bands are typically crowded, subject to fade, drift, and interference from stations which may not hear one another. Under these marginal conditions, operators commonly do whatever they can to assist the communications process. For example, they may begin to "push" the mike a bit in the hope of increasing the average sideband power. They will probably talk continuously for longer periods because they recognize that band conditions may deteriorate and they may not be able to say all they had intended to say. Since words and phrases often fade out, they are likely to pass the QSO to the other operator by using callsigns which are more easily detected than the single word "over." Further, their calls to other stations are commonly long to compensate for fade, noise, and interference. These practices, although useful in the HF region, yield unsatisfactory results when applied to other bands.

First, there is the tendency to "push" the mike, that is, to speak substantially louder than one's average speaking voice. In FM communications systems, the peak "loudness" of one's signal is limited by the clipping action of deviation limiting. Although average deviation can be increased somewhat, it is usually at the expense of intelligibility (due to distortion), especially in transceivers using phase modulation. Consequently, the tendency to speak more loudly than usual in FM communications conditions often results in reduced effectiveness and the practice ought to be avoided.

Long continuous transmissions also cause serious problems. They are also unnecessary. Obviously, while one individual is talking, he is the *only* one talking, and other traffic, possibly emergency traffic, cannot be passed. Some repeater groups consider the rag chewer their most serious problem, and certainly the effectiveness of a repeater must diminish considerably as the number of users declines due to the monopolistic practices of a few. Perhaps a policy of call and switch would reduce these problems. Call on the repeater, then switch to a simplex frequency.

The heavy use of unnecessary transmissions, especially callsigns, crowds the available repeater time and makes monitoring very tiresome. Although regulations require operators to identify only once within ten minute intervals, many insist on much greater frequency and often include the other QSO members' callsigns. The repetition of these redundant callsigns has no communications content. The amateur service is the only one which requires *any* mention of another's callsign, and this is at the *conclusion* of the QSO. Perhaps further FCC rule relaxation will eventually eliminate this contentless requirement also.

Another unfortunate practice is the use of extraneous verbiage in the call-up. Long call-ups are much more annoying than effective. Squelched receivers are either on or off, and long call-ups do not make them "more" on. Also, the call, followed by, "Are you there, Bob?" or some such thing is redundant. The call-up asks the same question.

Aside from the HF holdover habits, other practices and procedures can make repeater operations much more enjoyable and effective. The following are a few of them:

1. Keep radios in good shape. Clubs may wish to sponsor clinics to correct members' radio adjustments. Deviations should be limited to ± 5 kHz and mike gains should be set to minimize distortion. Transmitters should be on frequency.
2. Establish a practice of pausing several seconds between transmissions to permit access for other operators.
3. When breaking into a QSO, operators probably should use their callsigns rather than the word "break." The callsign is the only legal method, and some repeater groups have established the policy of not recognizing entering stations that use "break."
4. Avoid entering a QSO in progress unless substantial content can be provided. It might otherwise be considered a rude interruption.
5. Avoid testing on repeater input frequencies. Especially avoid testing telephone tones on repeaters.
6. Minimize repeater use for base station communications. Simplex operation is probably just as effective and is a much more efficient use of scarce frequency resources.
7. Use no more power than is necessary. Multiple repeater key-ups are becoming a major problem for some groups.
8. Try to avoid repeater DXing. When repeater DX is possible, it is invariably a result of weather conditions.

These conditions make it practically impossible to work into *only* one DX station at a time. Although it may be a thrill to work a repeater 500 miles away, it is likely that *all* repeaters along that 500 mile line (and then some, probably) with the same frequency will be held open during the operation. In some cases, clubs have complained that hand-held portables were unable to work in disaster situations because non-local DXers had captured local repeaters with their powerful signals.

9. When an operator wishes to use a repeater and is willing to talk with anyone, he might simply announce his call or perhaps his call followed by "monitoring" or "listening." "QRZ" does not really make much sense, but it is also occasionally used. But if he desires something in particular, such as road information or a test or to report an accident, he should say as much. Control operators and other listeners often cannot afford the time to engage in conversation for its own sake, but will happily provide needed assistance.

10. After calling a station and receiving no response, amateurs will occasionally announce something like, "Nothing heard, W4XYZ clear" or "W4XYZ clear." Such practices are common in commercial services, but serve no particular function in the amateur service. They probably ought to be avoided.

In summary, the abandonment of certain HF practices and the implementation of other procedures will make repeater operations much more pleasant and effective. These suggestions are offered for consideration. Clubs may wish to adopt them as policy or change them to ones more suitable to their particular operations. In any event, repeater groups probably ought to establish some guidelines to make their systems more manageable. ■

Tighten Up Your SB-102

—easy alignment cures

Stanley Sears W2PQG
188 Concord Drive
Paramus NJ 07652

Following assembly of a Heath SB-102 transceiver, a problem was experienced during alignment. While tuning the heterodyne oscillator coils for maximum drive to the 6146s, the meter reading was very erratic. Tapping the cover over these coils, or touching the bandswitch, also caused the grid meter to change reading, and the output to vary on the wattmeter.

Investigation revealed that the trouble was caused by intermittent parallel grounds on the four small PC boards located in this compartment. The trouble-causing extra grounds on these PC boards resulted from their loose fit in the slots of the metal comb attached to the support rail. (Refer to the pictorials on pages 84 and 85 of SB-102 manual.) Any slight movement of these boards caused a make or break contact with the metal comb, resulting in a change in ground current paths.

The problem was corrected by removing the metal comb from the support rail and replacing it with one fabricated from nonconductive plastic. I used a piece of right angle plastic molding obtained in a hardware store. Matching slots were cut using a hacksaw and the old metal comb as a template. *Two* blades were installed in the saw together to provide correct slot width. The plastic comb was then attached to the support rail in the same position as the original metal comb.

Prior to putting the rail and comb back in place, small strips of electrical tape were cut and placed along the bottom edges of the four PC boards. This was done to prevent the cover from touching the ground foil of these boards and causing a similar problem.

Following this modification, the heterodyne oscillator, driver grid, and plate coils were readjusted per Heath instructions.

After a few weeks of operation, one other problem developed with the SB-102. Gradually, a loss in receiver sensitivity and transmitter output developed. This was found to be caused by slippage of the belts on the small pulleys of the driver preselector tuning shaft. The pulleys were coated with a layer of rubber cement to create friction. When the cement dried, the belts were reinstalled and the two capacitors adjusted to track together.

As a final tip, take a look at the tuning range of the final loading capacitor. Heath instructions for pulley mounting are incorrect and, if followed verbatim, will permit only a 90° movement instead of a full 180° swing. Readjustment of the pulley on this capacitor will be required. ■

Michael Conwill N2MW
481 Carlton Road
Wyckoff NJ 07481

QRP Hints

—*for low power freaks*

When I first heard about low power operating (commonly called QRP, from the Q-signal meaning decrease transmitter power), I was a bit skeptical. As a new ham, I had fallen into the high power syndrome and had trouble believing anyone could communicate with a transmitter which used a half Watt resistor for the dummy load. Yet curiosity got the best of me, and soon I had built a QRP transmitter of my own. During my first QRP QSO, I not only discovered that using micropower for reliable communications was possible, but also found I was having a ball at the same time! How was my signal at W8TNL, 300 miles away, during broad daylight on 40m? I received an RST of 589, and power input was under one Watt!

The QRP Station

Getting on the air QRP is not difficult. Since QRP transmitters use a minimum amount of parts, building a QRP rig is an excellent way for the novice builder to get an introduction to construction, without putting his life savings on the line. Being simple and straightforward in design, such rigs are not hard to build, and parts are readily available. Plans for the construction of a number of transmitters in the five Watt region have appeared within the last few years in *73*.

For those who would rather buy than build from scratch, there are a number of reasonably priced QRP transceivers on the market, both in ready-made and kit form. Among the most popular are the Ten-Tec Argonaut and the Heath HW-8. Other, older model QRP rigs, such as the Heath HW-7 and the Ten-Tec PM series, may be purchased very inexpensively at local hamfests and flea markets. These compact units are not only useful for home station use, but also may be powered by batteries and taken to a field day or vacation site as well.

Depending upon the equipment you now have, it may not be necessary to purchase or build a separate QRP rig. Many transmitters may be run QRP by simply turning down the CW level or the microphone gain. Others will give a few Watts output while in the tune position. Experiment with your own transmitter and a sensitive wattmeter to see if either of these methods will work in your case. Remember that many transmitters will give out a Watt or two, even when the front panel meter would seem to indicate that this is not true.

If you decide to obtain separate equipment for your QRP operating, look for solid state equipment. This is especially true if you plan to operate portable, using batteries as the power source. Transistorized rigs are lightweight and compact and also waste less power than do comparable tube rigs.

When choosing a QRP rig, attempt to find one with a vfo (variable frequency oscillator). When using low power, it is sometimes necessary to duck out from under QRM, which is impossible to do when using crystal control. Furthermore, you will find yourself limited in operating space while using crystals, unless you have a large pile of them. From a construction standpoint, a crystal controlled rig is a fine way to start, but you will want to leave provisions for adding a vfo later.

If you do decide to sacrifice frequency coverage for ease of construction when you first operate QRP, build a rig using a variable crystal oscillator (vxo). This will enable you to shift your transmitting frequency a few kilocycles above or below the normal operating frequency of each crystal you have.

Many transmitters designed for QRP work suffer because they are made for only one band. If conditions on that band are poor, you're out of luck. Therefore, buy or build a rig which can be used on at least two bands. Not only will you still be able to operate when conditions on one band are poor, but

you will also be able to take advantage of the differing characteristics of the second band.

You may be wondering where you will find a rig which fits all the prerequisites I have placed upon it. If you plan to buy a commercially made rig, don't worry. Almost all commercial gear is solid state, has a vfo, and is multiband. If you're planning to build your rig and have had trouble finding a suitable design, check the July, 1976, issue of *73*. On page 30 is an article by WA7SCB called "The Mini-Mite Allband QRP Rig," which should help you.

One common myth is that a QRP antenna system must be exotic. This is not true. While beams and quads will outperform dipoles and add greatly to the strength of a QRP signal, they are by no means a necessity. The main consideration is antenna efficiency. Is your antenna cut to the correct specifications? Are all joints soldered securely? And is your feedline length kept to a minimum? If you are only sending out a few Watts to start with, it is important to make sure that as much of that as possible is radiated. Personally, I find that my dipoles, which range in height from twenty to thirty feet, do a suitable job.

QRP Operating Hints

When operating with low power, your signal will obviously be less strong than that of a station operating under similar conditions but using higher power. For example, the signal of a station using five Watts will be about three S-units below the signal of a 200 Watt station. Thus, the QRP operator must rely upon operating skill, rather than the ability to overpower another station, to make contacts. There are a number of things that a QRP operator may do in order to increase his reply rate.

Most QRP operators do not call CQ unless they are trying to raise another QRP station. The majority of hams will not answer the call of a weaker station, if there is a stronger station calling elsewhere on the band. Since this is usually the case, calling CQ while QRPing is almost always a waste of time. Instead, answer the call of a station calling CQ or one who is just completing a contact. After he has ended his transmission, he will be listening carefully for stations calling him, and is less likely to pass up a call than the operator who is casually looking for a CQ.

When calling a station, I usually sign my call and add that I am QRP. Many a high power operator will take the extra bit of effort necessary to work a weaker signal, if he knows the station on the other end is using low power. This will also let any other low power operators who may be listening know that you work QRP as well.

Do not be discouraged if it takes a number of calls before you get an answer. Many people who try QRP for the first time make the mistake of assuming that they will get an answer to every call, and they give up after only a few tries if they don't. Be very patient. Chances are, it will take you a while to get used to using low power, but, after you have, you will find that you are getting about as many replies as you did when you operated with high power.

QRP and Rag Chewing

The fact that you are QRP makes a great topic for the rag chewer. I have found that most high power operators are genuinely interested in my QRP experiences. Most ask about power input, antennas, and other equipment-related details, but some even ask how I got interested and express an interest in QRP themselves.

For those who wish to rag chew with other QRPers, low power stations may often be found on the unofficial QRP operating frequencies. On each band they are forty kilohertz above the band edge, with the only exception being twenty meters, where the QRP frequency is 14.065 MHz.

It is my opinion that forty meters is the best band for QRP rag chewing. Conditions are almost invariably reliable, with 500 miles being a typical distance during daytime and many thousands of miles possible at night. At night, though, avoid the broadcast stations. Most hams who run a kilowatt have difficulty competing with the broadcasters, so trying to, when using only a few Watts, is futile.

Whenever I hear another QRP station on the air, I attempt to contact him. Two-way QRP contacts can be very enjoyable and are beneficial. Exchanging operating experiences and hints will be of mutual interest, and the report you receive from the other station will help you judge just how well you are doing as compared to other QRPers. You will receive an honest signal report from the other QRP station because he would want to know truthfully how his signal was, instead of being flattered if he were in your place.

Low Power Contest Operating

Contests offer a great chance for the QRP operator to test his station, gain confidence in his equipment, and polish off stations for any awards he might be chasing. During contests, some of the best operators and stations are on the air, and together they have little trouble picking out the signal of a weaker station, despite QRM on adjacent frequencies. The contacts are quick, so there is no need to worry about fading or sudden changes in band conditions. Furthermore, there are enough stations to keep busy at all times. QRP operators have even won contests which have a low power multiplier, because the multiplier more than made up for the decrease in score caused by operating QRP.

When operating in a large contest, avoid the first few hours. During this time, everyone is on the air and most stations contact the loudest signal they hear. When the action has died down a bit and a station has to hunt for contacts, rather than hearing five returns to his CQ, the operator will have little trouble finding your signal. He will want your contact.

Always make your first call brief. A good contest operator will respond to a simple "de WB2DFO" and complete a contact quicker than if he replies to a louder but longer "WØXYZ de WB2DFO WB2DFO," and quickness is the key to success. Begin your transmission the instant the other station stops his. If you don't succeed at first, try again, making your call longer. It is always faster to make more than one call than to find an unworked station, and not uncommon to work a station on your second call, even if he missed your first.

When contesting QRP, make frequent band changes. This will ensure that you catch band openings that will bring in distant sections that are not always available to the QRP operator, and will also keep the flow of new stations coming in. Balance your activity between the higher frequency bands (20, 15 and 10), which will bring in distant sections, and the lower frequency bands (80 and 40), which will tend to bring in a higher QSO per hour rate. Of course, if the contest is based only on the amount of contacts made, rather than the amount of contacts times the number of different sections, go to where the most activity is.

During a contest, the "no CQ" rule may be broken, although calling CQ should still be the exception rather than the rule. By calling CQ, you can hope to get contacts

from those people who are in the contest casually, rather than to win. These stations are important and can do much to build a score.

If you have a few minutes during the weekends, get into the QSO parties. These often have a limited amount of participation, and those who are in it are desperate for contacts. Always send in your contest results, even if you only made a few contacts. You may find yourself getting an attractive award because you were the only entry from your state or section. The sponsors of the smaller contests are always happy to hear about your activity, and, if there is a lack of participation, they may not sponsor the event again the next year.

DXing?

At one time or another most hams are bitten by the DX bug. The QRPer is no exception. A low power operator is curious to see just how far he can get with only a few Watts of rf flowing to the antenna, and, while DXing is obviously more difficult and challenging at QRP levels, it is possible. In fact, a number of QRPers have made the DX Century Club, while using under five Watts, and numerous others have earned Worked All Continents.

A general rule in QRP DXing is use the highest frequency band that is open. When ten meters is open, it can produce amazingly strong signals at the receiving end of a QRP transmission, and its performance is greatly superior to fifteen or twenty meters. Many hams disregard ten and fifteen meters during sunspot minimum, and thereby miss DX openings. When this is the case, the QRP operator has a real advantage, for he may find himself on a band loaded with DX, but with very few DX-hungry American stations taking advantage of the openings. These contacts are there for the asking.

Since it is almost impossible to compete with multi-kilowatt stations and the QRM caused by them, avoid large DX pileups. Instead, tune around the band. You may find that so many DX hounds are involved in the pileup that there are other less rare DX stations who have few people to talk to. When working in the smaller pileups, your best bet is to transmit about a kilohertz above or below the rest of the crowd. If the DX station is having trouble copying due to QRM, there is a good chance he will hear your signal on the side.

When trying QRP DXing, have patience and more patience. Chances are you won't get a DX station on your first call. You may not get him at all. But when you finally do work some DX, congratulate yourself! The pride obtained from raising a DX station while running QRP is immensely greater than that obtained when using high power.

Closing Notes

QRP operators have their own club made up of hams worldwide who enjoy low power operating. The QRP Amateur Radio Club International consists of almost four thousand QRP operators. It sponsors awards and operating activities for the low power enthusiast as well as publishes a quarterly newsletter. Membership information may be obtained from the club secretary, Joseph Szempias W8JKB, 2359 Woodford St., Toledo OH 43605.

Good luck! I hope you decide to give QRP a try. If you do, you'll find out that operating with low power is, indeed, possible and is a great deal of fun. Right now, I think I'll give the bands a check myself. Maybe I'll hear one of the last few states I need for QRP Worked All States! ■

Peter A. Lovelock K6JM
1330 California Ave., #307
Santa Monica CA 90403

Brass Pounding Simplified

—beat the heat!

A while ago I wrote an article titled "Tuning Mr. Morse's Key" (*73 Magazine*, February, 1972), a masterpiece in basics. After submitting it to *73 Magazine*, I had second thoughts that anyone would be inspired by the care and feeding of Morse keys. I had two surprises coming: Surprise no. 1 – 73 accepted and published the article; surprise no. 2 – numerous readers' letters arrived, claiming how helpful they found this article.

As Confucius said, "The simplest things may not be as simple as they appear." Or was it Murphy?

I was not born with a brass Morse key in my hand. I make no claims to being a real hot CW operator. But I did pass the 25 wpm "Marine Wireless Operators" code test and set sail, just after my 18th birthday, in the British Merchant Navy, which means that, commercial and amateur, I've been pounding brass for 36 years.

Now it really hurts me to still hear so many of my fellows uttering agonized cries over increasing their code speed. Despite all the latest learning aids (tapes, records, et al), my friends still complain about that unsurmountable plateau that stops them from attaining 13 or 20 wpm. After months of sweat and tears, sometimes punctuated by repetitive visits to FCC offices, a fair number make it. Some don't. All could make it, and in a much shorter span of time.

Is there a secret way of overcoming Mr. Morse's misery? There surely is a way, though it's no secret if you give it some thought. If there is any secret method, it lies in firmly establishing some basic facts in your mind and sticking with them, simple as they may seem.

Let me illustrate the rationale by boring you with some of my youthful history. Living on the southeast English coast in the mid 30s, my interest was aroused by spluttering squawks invading the low end of the broadcast band. These were emitted by the still prevalent quenched spark gaps on 500 kHz, from freighters passing between the North Sea and English Channel. I learned my basic code eavesdropping on their traffic with GNF, North Foreland coast station. There was a lot of repetitive stuff – "CQ," "de GNF," "QTC1," "QSW 425" – which I soon easily recognized. Casual marine monitoring, plus some SWLing on 40 CW, soon found me fully functional at 10 wpm – enough to qualify for the British "Artificial Aerial License," prerequisite to the radiating "Experimenters License." I was still an avid listener to all and any code stations, since 3 September 1939 terminated transmitting possibilities.

At this level of 10-12 wpm, I arrived at the London Telegraph Training College, which was replete with quenched spark gaps, TRF receivers, and pump-handled telegraph keys. It also had many headsets for learning code at accelerating rates of speed. Just thirty days later, I passed the 25 wpm "Wireless Operators Code Test," administered by a growling General Post Office inspector clutching his official turnip watch. From 10 to 25 wpm in 30 days – it can be done.

Now I can hear you saying, "It's easy for some." Granted, we are each endowed with certain learning capacities, and some find code to be easier than others. But the basics of overcoming the speed hurdle are the same for all. In an effort to help those afflicted by the miseries, I have organized these basics into six "Lovelock's Laws of Learning."

Law No. 1
Eliminate the Dit-Dah Syndrome

Boy Scouts earn merit badges for memorizing the correct numbers and sequence of dots and dashes representing each letter and number. Ham radio primers have attempted to correct this original fallacy by translating it into dits and dahs. This is about as helpful as becoming fluent in French by learning to conjugate the verbs (which few Frenchmen can do).

Lovelock's First Law of Learning states that there are no such things as dits and dahs. Forget 'em. They don't exist. Never permit a dit or dah to cross your mind from this day on. The dit-dah syndrome is a major mental block to code fluency.

What you will get firmly in mind is that each code group has a uniquely different sound pattern, like the vowels and consonants of the spoken word. You will aim for memory recall of this distinct sound pattern, mentally registering a letter or number every time you hear it.

For example, the letter "C" sounds like "murder-murder." There is no other letter that sounds just like it. "I am" is letter "A". "Am I" is letter "N". I'll leave it to you to invent recognition sounds for each character. As an individualist, you are bound to have your own favorites.

Go about your daily chores muttering "murder-murder," and the letter C will soon become indelibly fixed in your mind. If you mutter too loudly, I take no responsibility for any unwanted attention you may attract. Mutter "I am" all you want. Besides improving your code, it does wonders for your ego. Passersby will assume you have joined one of the popular cults. But, to you, "I am" will always mean "A".

Sound pattern recognition is the name of the game, and the faster the better. It's just as when you learned to read – by recognizing the visual pattern as a whole, *not* by recognizing a vertical line, curled atop with a mid-bar, "Oh yes, that's F." You recognized the pattern without thinking. The same goes for the hearing mechanism which, like the eye, recognizes *whole word patterns* without analyzing individual letters.

See? You are already on the threshold of high speed capability. The pros copying 30 to 50 wpm code recognize short words and word groups as total patterns, rather than as letters. Repetitive short words like "the," "and," and "it" are common patterns.

You will master sound pattern recognition. You will enjoy it.

Law No. 2
Eliminate the Time Syndrome

An aspiring amateur golfer once asked the venerable pro Tommy Armor, "How can I learn to play like a real professional?"

"That's easy," replied Tommy, "just play eighteen holes, twice a day, seven days a week for a year, and you'll be amazed how your game will improve."

Lovelock's Second Law states that the speed of accomplishment is proportional to the time invested, as a square law function. "Practice makes perfect" brings back some onerous memories of early school days. But it is an irrefutable fact. At the London Telegraph Training College, it was code copying four hours a day, six days a week. That's 24 hours a week, or about 100 hours in one month, which raised me from 10 wpm to 25 wpm. What is important is that these hours were concentrated into a relatively short period. We copied until our ears retracted and our eyes bugged. We copied at increasing speed rates, mercilessly applied. But with nothing else to do, we soon copied effortlessly those unmistakable sound patterns.

Now if you spread 100 hours of copying code over a year, your rate of achievement will be inversely proportional to the x12 period, which means that diluting the effort won't hack it.

You say that no way can you spare four hours a day. What with a full-time job, night school, civic duties, "honey-dew" home chores, you are lucky to get in a couple of hours a week. Then better forget it and stick to CBing, for it's a long road to that Advanced or Extra class ticket.

Now, you are just excusing yourself from a little effort. There are prerecorded tape cassettes and pocket-sized recorders to play them back. You may have these already. If not, the cheapest is a great investment. And you can record commercial code stations from a general coverage receiver for new copy.

Armed with these, you will copy code any time you are not obliged to listen to something else (like your boss), while commuting to and from work, at lunch time, instead of taking a nap, and instead of cultivating ulcers watching the news on TV. The average American commutes two hours a day, has a one hour lunch period, and suffers at least one hour of TV media newscasts. There, you have that four hours. Need I point out that you do not always have to write the code into letters to memorize the character sound patterns?

In all seriousness, classic code classes attended in person or on the air for a couple of hours a week are just barely helpful if you want to gain speed in a reasonable time. Cram it in your ear every chance you have.

You will listen to code twenty hours a week. You will enjoy it.

Law No. 3
Eliminate the Skip Syndrome

Frustration is letting the mind pause to unravel an unrecognized sound pattern, while five other characters slip by. "Skip it" is the mode you must condition yourself to. It matters not that you might so skip five characters. Keep copying everything you recognize instantly, and shrug off the holes left over. After all, this is a learning state; you are not pretending to be proficient. Continuously pausing and missing easy ones inspires frustration, anger, and, finally, hatred. Keep on copying, and you'll be pleasantly surprised to find that the misses gradually go away.

You will also copy more relaxed, giving no attention to any holes – at this stage no one is keeping score. But, by all means, note those characters you habitually confuse. Q and Y are commonly misread or missed, as are F and L. Both have inversely related sound patterns. Sort them out by muttering their selected word patterns while recalling the appropriate character, and keep this up until they become distinctively recalled.

Lovelock's Third Law says that you don't give a damn about what you don't copy during practice sessions, but stick to getting down those you instantly and naturally recognize.

You will copy relentlessly. You will enjoy it.

Law No. 4
Eliminate the Speed Syndrome

"I can copy ten words per minute fine, but at twelve I fall apart," is a familiar cry. It's obvious that there is some speed that we all fall apart at, but what has that got to do with improvement?

Lovelock's Fourth Law states that you will always practice copying at a speed above your present capability. This seems to be so obvious as to be unworthy of mention. But most of us drop back on that which is easy. Many will continue to copy at a speed at which they can succeed, with the blind faith that somehow, magically, easy copying will cause their speed to increase. Not so.

You must always copy at least two wpm above the level that is comfortable for you, until you attain around 95% proficiency. Then shift gears up two wpm again. Since our capacities vary from day to day, you will have good and bad days. Don't let the bad cause you to slip back in speed to salve your ego or retain interest. Keep on the pressure and forgive yourself the omissions of a bad day, applying Law No. 3.

You will keep on copying code above your capacity. You will enjoy it.

Law No. 5
Eliminate the Frustration Syndrome

"I can't" is the universal expression of defeatism. Lovelock's Fifth Law states that if anyone else can, so can you. The secret here is to stay loose at all times. Never acknowledge that you cannot overcome the current speed plateau. You have heard others say this so often, you

have become mentally conditioned.

Every time you have a copying session that's not as good as the last time, your tummy muscles become spastic, you damn the license requirements, wonder if it's all worth it, and lapse into an "I can't" mood.

This is the psychological factor which is synonymous to that impacting everyone facing a test of ability. Getting uptight, self-doubt of ability, and fretting only serve to slow down the learning process. Keeping relaxed and enjoying the challenge sounds easier said than done. It is an absolute fact, as positively proven, that people who engage in any learning process with a carefree attitude progress the fastest. Consider those practice sessions as fun. Let go of your hair. Forget the progress objective, and it will happen. After all, if so many others have succeeded, what makes you the exception? Don't be so vain.

The pro is completely relaxed in effortlessly copying code. Why? Because he has no reason to doubt his ability, knowing that he can "read" it while taking a shower upside down and eating a pizza. He reads the code like the spoken word and can memorize and copy it on paper after leaving the shower. Just get into your mind that code sounds are just another type of language, and you've got it made. Stay relaxed. Losers are those who bust pencils while copying.

You will keep carefree and relaxed while copying code. You will enjoy it.

Law No. 6
The Last Law

You can make 20 wpm in record time, if you really want to.

Summing Up

After reading the above, you'll probably say, "Well, I *know* all that, so what's new?" But if you are suffering from a case of Morse syndromes, knowing may not mean believing. And these simplified laws *will* work for you, if you care enough to apply them.

Let's just review them in brief:

Law 1 – Recognize sound patterns that mentally register characters.
Law 2 – Compress learning into a minimum time period.
Law 3 – Copy what comes naturally. Don't stall on misses.
Law 4 – Keep the speed pressure above your easy level.
Law 5 – Stay loose. Enjoy the experience of learning.
Law 6 – You *can* make it – and much faster than you think.

So far, I have dwelt on copying code without a word about sending. Well, did you learn to write before you could read? Sending is largely a matter of manual dexterity, which also requires its share of practice.

I have often heard beginners say that they can send faster than they can receive. Double baloney. They may think they are speedier senders, but the fellow trying to copy is unlikely to agree. Since sending is a reversal of the receiving function, you can't send good code faster than your recognition capability, *plus* the dexterity that, like driving a car, is manipulation of the key without conscious thought of each manual action. The key becomes an extension of your arm, like a steering wheel, reacting naturally to mental stimulus.

To all of you ambitious to overcome the misery for that coveted license upgrade, like my good friend Ron P., to whom this treatise is dedicated, may these basic laws speed your success. And the day will soon come when your junior op can brag to the neighborhood kids, "Dah-di dit-it." ■

Evert Fruitman W7RXV
2808 W. Rancho Dr.
Phoenix AZ 85017

Custom-Made Thermistors

—*for precise values*

I had a need for a high resistance thermistor (temperature sensitive resistor). The best that the junk box could do was one with about 700 Ohms at room temperature. The nearest parts house had a batch of unmarked units at the bargain price of ten for $1.39. Well, at that price, how could I lose? Surely there would be some high, medium, and maybe a few low resistance thermistors in a mixed batch that size.

Their room temperature resistance ranged all the way from two and a half Ohms to ten Ohms. That was not quite what I expected from those large, shiny discs. It made me start to wonder how much change in resistance could be obtained by reducing the area of one of the large ten Ohm units.

One of the ten Ohm thermistors was chucked up in the ohmmeter, and the dikes were applied. As bits of material came away with each bite of the steel jaws, the ohmmeter crept up a little bit at a time. When the dust was settled, the ten Ohm unit read 80 Ohms. What had been about a 2:1 change in resistance for a given change in temperature was turned into about a 15:1 change in resistance. With that much change, the new controller design was a snap.

Although the area of the thermistor was cut down, and with it the current carrying capability, the smaller units would still handle the few mA required in this application. With a little care and a coping saw, it should be possible to cut one low resistance unit into two or more higher resistance units, and that cuts costs. ■

Robert Cowan KL7IEP/1
PO Box 2143
Augusta ME 04330

Sterling Haskell W1KIQ
18 Hayford Street
Hallowell ME 04347

UHF Propagation

—believe it

There is a tremendous amount of communications research taking place all over the world, especially in the higher (UHF and above) frequencies. With more and more activity taking place in the 140, 220, 440, and higher bands, a recent report by the Communications Research Centre (CRC) of the Canadian Department of Communications[1] made a number of timely observations.

The purpose of the report was to document existing research at the higher frequencies and summarize the results. While the data reported covered a very broad spectrum, we will be reporting on the findings as they relate to amateur radio. For those of you who are new to this whole radio business, different frequencies travel through the air differently, or, as they say, have different propagational characteristics.

The portions of the 1976 CRC study of interest are: how distance and height affect signal strength, how fading, delay, and Doppler shift can complicate reception, and how well VHF/UHF signals can go through buildings.

Many times there is nothing in ham radio as exciting as turning on the radio and hearing a signal coming from some faraway place you've never heard of, and which you may never hear again. That's what attracted many ham radio operators to this hobby in the first place. But, there's also a challenge to be able to overcome the seemingly random nature of the ham bands and predict when you can talk with that faraway location. Just take a quick look in the back of this magazine and you'll see the propagation prediction for this month. What some people don't think about is that you can also predict propagation in the VHF/UHF bands. With a little bit of paper and pencil, you can answer questions like, "If Joe is 25 miles from me and comes in about S-5, how can I improve reception to an S-9?"

Before we take a look at what the CRC says about propagation as it relates to distance, let's review some of the general terms that are thrown around when talking about antennas and propagation. First, the one element that appears all the time is the "dB" (decibel). Just so we don't overkill with a technical definition, we'll be rather general. The dB is a ratio between two powers, and, like everything else in radio, is expressed by a formula. To find the dB difference between two powers, you use the formula $dB = 10 \log_{10} P_2/P_1$. Don't be overwhelmed by the math. Let's look at an example. Say that you're looking at a 75 Watt amplifier for your 25 Watt 2 meter rig and you want to know how much of a dB increase there will be. OK, first divide 75 by 25 (3, right?). Then take the log of 3 (say, 0.47). Finally, multiply by 10 for the final answer of 4.7 dB. Not too bad? Since you now know the dB figure, you can see what will give you the best coverage for the dollar — the new amplifier or replacing that old ¼ wave dipole you're now using with an economical 4.5 dB gain antenna. You'll also get an improvement in your receive noise level since you won't have to go through all that electronics.

Part of the secret in dealing with all this dB stuff is not to let it get the best of you. Simply, every time you increase your power by 10 dB, you multiply your power in Watts by 10. So, if I have a 10 dB antenna hooked on to a 10 Watt rig, it's just like having 100 Watts running into a dipole. Another simple way to think about dB is that every time you add another 3 dB, you're doubling the power. If I add a 6 dB antenna onto my 10 Watt unit, it's the same as having a 40 Watt transmitter and a dipole. By the way, a dipole is one of the standards used as a reference.

The other thing to remember is that all radio waves lose power as they travel through the air. This is called "path loss," and is generally given in dB. This loss is really quite high, and a signal may lose between 50 and 200 dB between your transmitter and the receiver on the other end! So, the idea is to keep losses as low as possible.

Signal Strength and Distance

Of particular interest in the CRC report was a formula that allows you to calculate your radio's range for 90% coverage — that is to say, the range at which you would cover 90% of the area 90% of the time. Here's the formula, but don't let it freak you out; we'll walk through it in a moment:

$$D_{90} = \left[\frac{7.9 \times 10^{11} H_T^2 H_R^2 P_T G_T G_R}{f^2 L_N L_L L_{SS}} \right]^{1/4}$$

OK, let's look at the parts. First, "D_{90}" will be the answer — your range (distance) in miles 90% of the time. "H_T" and "H_R" are the transmitter and receiver antenna heights above the average terrain level in feet. "P_T" is the power of your transmitter in Watts. "G_T" and "G_R" are the antenna gains at the transmitter site and receiver location. "f" is simply the frequency in MHz. "L_N" is the receiver noise figure. If you don't know what it is, just plug in the following values: 50-54 MHz = 3; 144-148 and 220-225 MHz = 5; 420-450 MHz = 10.[2] "L_L" is the frequency

factor and you plug in the following appropriate number here: 50-54 MHz = 13; 144-148 and 220-225 MHz = 25; 420-440 MHz = 50. "L_S" is the loss of signal due to the length and type of coax, both at the transmitter and receiver. Finally, "S" is the receiver sensitivity in Watts. Ready to try it out?

All you have to do is pull out your calculator and plug in the values. Let's say you want to see if you will be able to talk with your friend Fred once all of the 2 meter gear he ordered comes in. Your antenna height is about 30 feet above the average terrain and Fred's will be 40 feet (H_T = 30; H_R = 40). You're running 10 Watts (P_T = 10) in the 2 meter band (f = 146). Your Ringo Ranger has a gain of 4.5 and Fred's beam will have a gain of 7.5 (G_T = 4.5; G_R = 7.5). Since you don't know Fred's receiver noise factor, you use the value for 144 MHz (L_N = 5). You then plug in 25 as the correct frequency factor of 144 MHz (L_L = 25). Then you throw in the line loss of the coax you and Fred will be using. Let's just say you and Fred will be using RG-8, which has a line loss of about 2 dB per 100 feet, and you each have just about 100 feet of coax between the transmitter/receiver and the antennas (L_S = 4). Finally, the receiver sensitivity in Watts. This is one of the more difficult parts to figure out and we're still not sure if we have all the answers, but 5.0 x 10^{-14} seems to be in the ball park for most receivers.

Now, if we throw all of it together it looks like this:

$$D_{90} = \left[\frac{(7.9 \times 10^{-11})(30)^2(40)^2(10)(4.5)(7.5)}{(146)^2(5)(25)(4)(5.0 \times 10^{-14})}\right]^{1/4}$$

By the way, don't forget to take the ¼ root of whatever you come up with in the brackets. Another way of stating it would be — take the square root of the square root of the answer in the brackets. After you work the formula, you should come up with an answer near 16.38 miles. That means if Fred is closer than 16.38 miles, you two should be able to talk 90% of the time, or, for that matter, you now have a range, dependent upon terrain, of about 16 miles, provided other hams have a setup similar to Fred's.

The CRC points out that these formulas, while helpful, are only predictive tools. There is considerable variation due to buildings or hills which may either stop signals from reaching you or may reflect signals your way.

Signal Strength and Height

The CRC report cites some rather interesting findings about transmitter heights. First, the variation of losses through the air is essentially the same from 200 to 2,000 MHz. Second, for low height antennas, where receivers are about 6 miles or so away, the antenna gain increases by 6 dB each time the antenna height is doubled. Third, if you are using a repeater on a high hill and are working mobiles about 20 miles or further away, the power increase is 9 dB each time the height is doubled. However, the CRC notes an English study which observed as much as 15 dB increase each time the antenna height was doubled. While no reason for the variation was given, with the cost of amplifiers these days, it sure seems worth it to put the antenna as high in the old oak tree as it will go.

For the receiving antenna, "the higher the better" still holds true. For example, by increasing the height of your antenna from 5 feet to 10 feet, you can add another 3 dB. But, if you double the height again, to say 20 feet, you can add another 7.5 dB. Of particular interest was the finding that, depending upon frequency and location, the gain at 30 feet relative to that at 10 feet varied in many of the studies from 7 to 18 dB. This may give incentive to putting the mobile rig antenna a little higher than just on the roof of the car.

Fading

Most everyone who owns a 2 meter mobile rig and has operated while driving has noticed a rather rapid fading. If you can see your signal strength meter while driving, and not run off the road, you'll notice the rapid fading even more. While this may seem a minor problem, for those hams who will be getting into data transmission and telemetry from their cars, it can mean real trouble. As the CRC states, studies in Manhattan show variations of up to 15 dB per foot of travel! The rate of fade can be determined from the formula:

F = (0.003)(Frequency in MHz) (vehicle speed in meters/sec). For those who are non-metric, the metric vehicle speed could be replaced by (miles per hour/2.24). At 30 miles per hour, the rate of fade at 146 MHz would be about 6 Hz, and at 440 MHz, the fade rate would be 18 Hz.

Delay

In a city with many large buildings, the VHF/UHF signal can bounce around like a pinball down the streets and up alleys. Hence, since an omnidirectional antenna is generally used, signals will be scattering all over the city streets and one or more waves may arrive at your receiver a little later than others due to the longer overall path. These multiple path problems, or "multipath," can create a variety of time delays. The CRC cites a New York study in which these delays ranged almost up to 10 microseconds and could change dramatically if the receiver were moved as little as one foot!

The CRC concludes that, in light of the delay problems, data transmission must be less than 30 kbps, for an error rate below 10^{-3} over 90% of the time.

Doppler Shift

Because VHF/UHF signals are reflected around a city so much, a moving car may be heading towards the reflecting source or away from it and the apparent frequency may be shifted either higher or lower respectively. The report notes that most VHF/UHF signals travel up and down the streets and that the Doppler shift is at its maximum at 900 MHz. At a vehicle speed of 30 miles per hour, the Doppler shift ranges up to, and tends to peak at, about ±40 Hz.

Penetration of Buildings

Finally, it was interesting to read that measurements made in office buildings in Washington show an average attenuation of 25 dB for frequencies between 450 and 900 MHz. The CRC concludes that buildings reflect rather than pass signals, but that signals may be picked up on the side of the building away from the transmitter (shadow side) due to multipath.

Conclusion

Before reading the CRC report, we knew little about propagation prediction or how VHF/UHF signals crashed around in an urban environment. Now we can use the formula in this report and "simulate" changes in our stations to see what we might gain from this or that modification. But after wading through the formulas, the fading, and multipath problems, there came a renewed respect for "radio" in general and an amazement that it even works at all, in spite of the apparent odds to the contrary. ■

References

[1] Palmer, F. H. *Review of propagation in the 470-890 MHz band with emphasis on land mobile and cellular systems (CRC No. 1288).* Ottawa, Canada: Communications Research Centre, Canadian Department of Communications, February, 1976. (NTIS No. N76-27450)

[2] Tilton, E. P., & Blakeslee, D. A. *The Radio Amateur's VHF Manual.* Newington, Conn., ARRL, 1972. Page 24.

Neil Rosenberg WB1FFQ
5 Footpath Road
Chelmsford MA 01824

Tune-Up Aids For the Blind

—practical metering circuits

Most ham radio operators are very capable of making quite functional home brew equipment, yet it usually comes out looking like a relic from the old Erector set. Specifically, human factors are usually ignored, in both self-built and commercial gear, yielding uncomfortable and confusing controls. These poor designs can typically be overcome by the sighted amateur, but the blind operator is much more influenced by the control layout, shapes, and materials. His range of perception is limited to the tactual and other nonvisual realms. To expect him to search for controls, or rapidly dart from one corner of a panel to another, puts a real strain on his abilities.

As a design challenge, I decided to make a package which represented good human factors awareness and, additionally, demonstrates that such design is not inherently expensive. The chosen task was to make a product which will enable the unsighted individual to use his tactile and auditory senses to read an analog meter, like the kind found in almost all ham gear, and most accessory equipment (swr bridges, VTVMs, etc.). The person will thus be able to operate the great majority of gear for tune-up, alignment, and measurement. This gives him the independence which is so highly valued by all.

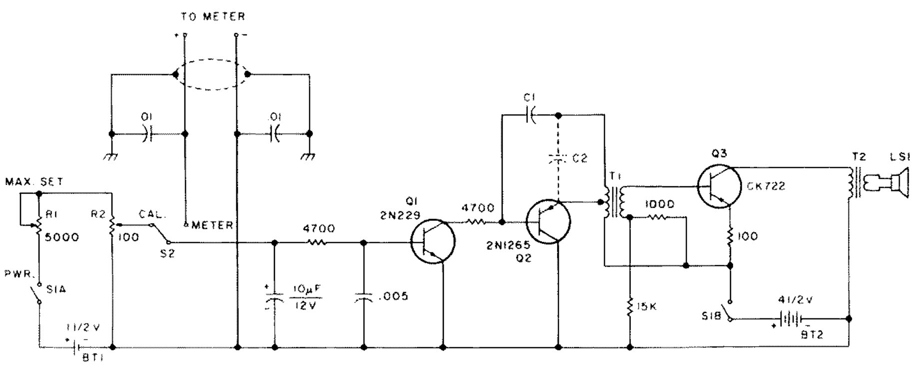

Fig. 1. Circuit of the meter reader. Capacitances are in uF and resistances in Ohms. Fixed capacitors not listed in parts list are ceramic, except that polarity marking indicates electrolytic. Resistors are ½ Watt.

The priorities that must be considered, in rough order of importance, are:

1. Safety, freedom from dangerous shock.
2. Reliable operation, easy maintenance.
3. Ease of control location and operation.
4. Good comfort of use.

All of these factors fall under the broad heading of human factors engineering, since each deals with an aspect of the man-machine interface.

The circuit used is three stage (Fig. 1)*, consisting of dc amplifier Q1, audio oscillator Q2, and output amplifier Q3. The basic operating scheme consists of connecting the Sound-Tune to the appropriate analog meter terminals, which could be in any of the gear in use. The dc amp increases this signal to a level which can control the frequency of the oscillator stage. In this way, the frequency is directly proportional to the reading on the meter. Alternately, the dc amp can be fed by voltage divider R1-R2, as determined by S2. Thus, a direct relationship can be made between the value of variable R2 and the meter deflection, by adjusting R2 until the tones heard in both positions of S2 are identical.

In order to initially calibrate the dial scale of R2, you must make the dynamic range of divider R1-R2 the same as the range supplied by the zero to full scale deflection of the meter. This is accomplished by adjusting R1 to give a tone match when the meter is at full scale and R2 is full clockwise. Once this is done, a calibrated (Braille) scale can be produced by setting the meter to specific points and finding the match point on R2. Those points are then marked on the scale and will be accurate until R1 is changed, or a different meter is connected.

This circuit is unchanged from the original, since it works very reliably and efficiently. Also, it can be constructed from even a meager supply of surplus parts, or from easily available new components, and can be put in a small enough package without the use of ICs. Besides, the purpose of this project was to create a design which was well suited to the needs of the blind community, not to prove how small or complex the circuitry can be made.

Upon building the first unit, I realized a valuable usage not mentioned in prior articles. The Sound-Tune can be used "backwards." That is, one can preset R2 to a desired reading and then adjust the related gear to give a tone match. In this way, one can easily set the bias on an amplifier, adjust a power supply, or do just about any other task which requires setting a control for a static value.

In either direction, it has been found that, once the detachable scale has been calibrated for a particular meter, excellent accuracy can be achieved. Since the ham usually has a variety of meters in frequent usage, he needs to be able to easily flip from one to another. This can be solved in a number of ways, depending on the particular needs of the user. Each meter could have its own output cable and associated scale for the Sound-Tune, which can be plugged

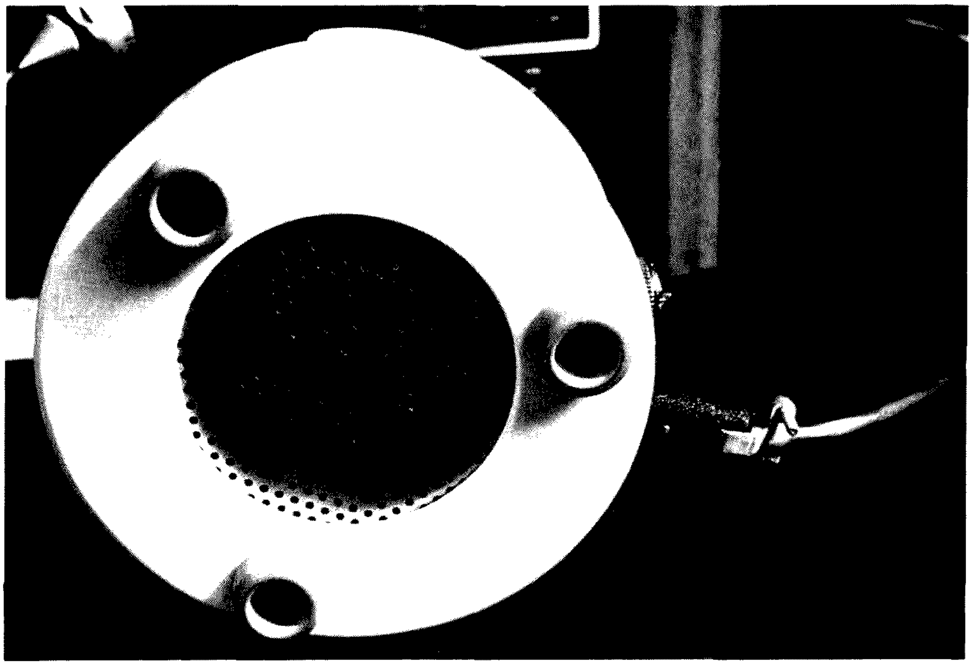

*"An Audio Meter Reader for the Sightless," Ken Blaney W6PIV, *QST*, April, 1963.

SOUND-TUNE

A DEVICE TO ENABLE SIGHTLESS PERSONS TO READ METERS BY SOUND

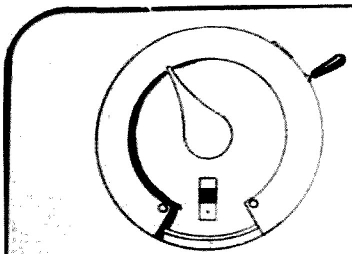

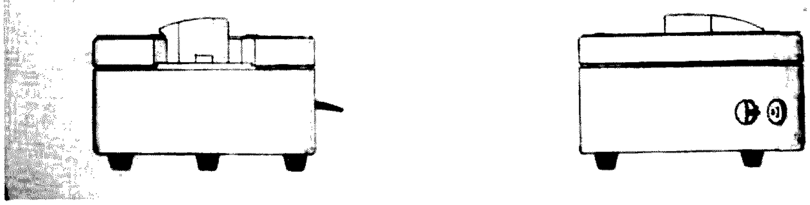

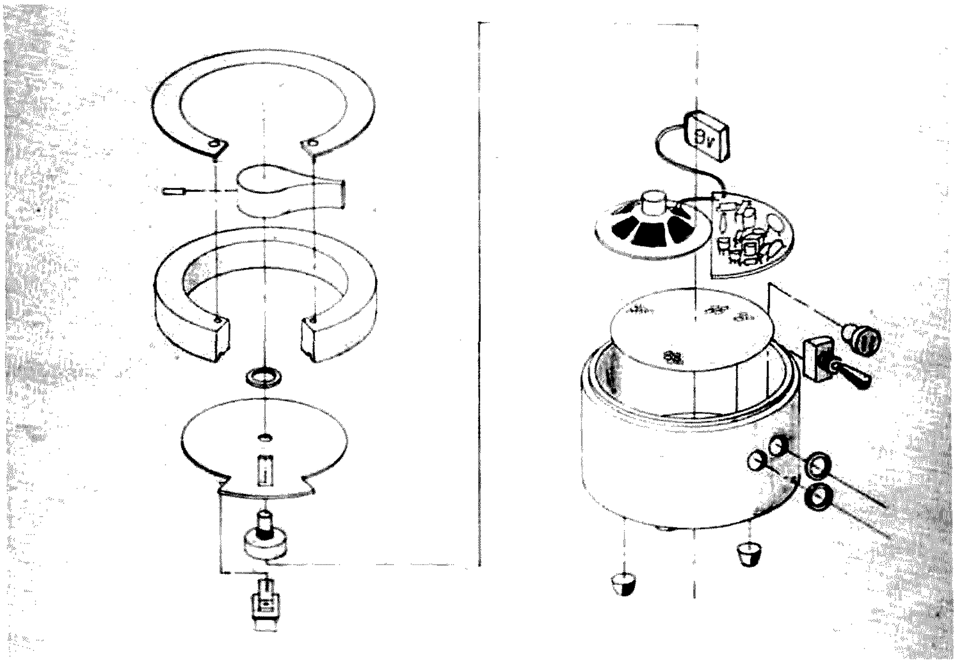

in and clipped on respectively. Another approach is to have a multiscale dial on R2 and a rotary switch which inserts preset values for R1 for the different movements. However it is accomplished, the design must accommodate the restricted "finding" ability of the blind, by localizing and using good sense when designing these controls.

Material choices and the quality of machining/assembly have a great bearing on how well the device will interface with the user. For example, wherever possible, corners were generously rounded, and it was determined that the conventional rectangular shaped cabinet was not well suited to the device. Also, a lot of effort was given to facilitate proper control usage and to insure nonambiguous layout. The main potentiometer knob is designed with a small centering indent, to get the user "on target" quickly. Similarly, the circular ridge on which the scale is affixed has a 30 to 45 degree break in it, where the potentiometer is inactive. This way the operator knows from feel how he is oriented in relation to the scale.

The cabinet top is roughly 2½ inches off the table surface, and all operations are conducted in a downward direction. Therefore, the user can rest his hand comfortably upon the top, which helps prevent fatigue of the arm. Also, owing to its small size, the unit can be placed almost anywhere on the counter, to suit any arm position.

The material used has an effect on the utility of the device, as well. Since it will be in contact with the bare hand, one would not want to choose a material which is abrasive or one which has high thermal conductivity. Also, one must be careful to choose a color which will not heat up in direct sunlight, as this can affect the calibration, and make it too hot to touch.

The prototype constructed for this project is basically cylindrical, machined on a lathe out of ABS plastic stock, available from most plumbing supply houses. The speaker is mounted facing down, and the sound travels out through a perforated aluminum grill. A set of three rubber feet support the unit off the table surface, both to allow sound out and to provide a nonskid bottom.

The main knob for R2 was machined out of aluminum, but there are a number of arrow-type pointers which will serve the function. One important design consideration is to make sure that the pointer does not cover the scale, but, instead, guides the finger down naturally to the numbers or markings, without obscuring them. The choice of materials, aluminum for the knob and ABS or styrene for the case, are both very free cutting, can be hand-machined easily, and will produce a satin surface when finish sanded with a #400 silicon carbide abrasive paper. Any bare aluminum surfaces should be coated with a clear lacquer to prevent oxide rub-off onto the hands.

At first, a linear slide control was considered for R2, mainly for aesthetic reasons. However, rotary potentiometers have some distinct advantages over the linear type. The rotating types are

relatively immune to dirt, are easy to locate and control accurately, and are available in a wider variety of ranges and tapers. It was, therefore, an easy choice to select this kind. Once having fixed upon this, the shape of the device followed naturally, but I do not consider the prototype to represent the penultimate in design. Rather, it is an excursion into a fairly freewheeling approach, which can mature into a very good design. It is about time we get away from the notion that equipment must be shaped to mount in a rack to be of any value.

The rest of the controls follow suit. Switch S2 is located at the base of R2, in a position which will encourage rapid switching between standard and source inputs with an easy thumb movement. Power switch S1 is placed in a convenient spot for actuation by the remaining fingers. In the prototype, it is on the side for right-handed operation, but there is no reason a duplicate can't be placed on the left side for the southpaws. The top of the case slips on in a friction fit; a mating circular tongue and groove top and bottom assure reliable assembly, with a minimum of loose parts, and assure easy access to the batteries for replacement. Once inside, the penlight batteries can be replaced by feel, by placing the flat (negative) terminal of the batteries against the spring contacts in the holders. Battery drain is rather low, and unless it is inadvertently left on overnight, should last through about a year of normal use. Except for a rare recalibration, battery replacement is the only reason to access the inside. As a further precaution, the power switch is placed so that it takes an upward thrust to turn it on, thus minimizing the possibility of accidental activation by placing something on top of it.

The layout used is, of course, only one of many possible variations, but it represents a first crack at a design suited for better comfort and convenience. For example, the scale can be made larger to accommodate more than one scale on each clip. The prototype cost roughly fifteen dollars to build, assuming all new parts and free labor. Indeed, it is curious why this kind of "medium technology" is not more available at low cost to the handicapped. Blind people are typically not wealthy, but this must not prevent them from active participation in the arts of hamming. The more that is done to make the handicapped more independent and as self-reliant as possible, the more all of us will benefit, and the more hamming will become a truly cooperative hobby. ■

Parts List

BT1	Single penlight cell
BT2	Three penlight cells in series
C1	Paper or ceramic capacitor, 0.002 to 0.1 uF, as necessary to set oscillator minimum frequency
C2	If required, select values within the range given for C1
LS1	2-inch loudspeaker
Q1	Sylvania 2N229 or equivalent
Q2, Q3	Raytheon CK722, Sylvania 2N165 or equivalent
R1	Miniature control, screwdriver shaft
R2	Linear wire-wound control (CRL WW-101)
S1	DPST slide switch
S2	DPDT slide switch, poles connected in parallel for low resistance
T1	Transistor driver transformer, 10,000 to 2,000 Ohms, c.t., center — tapped secondary used as primary (Thoro XFM-2 or similar)
T2	Transistor output transformer, 500 to 3.2 Ohms (Thoro XFM-3 or similar)

Clifton W. Pittelkau W4CQI
Rte. 1
Warrenton VA 22186

KIM-1 Can Do It!

Of the several thousand KIM-1 microcomputer systems produced since the system's introduction, many are now being used by hams in a number of interesting applications. The KIM-1 may be adapted to function as a versatile RTTY terminal at nominal cost. This article discusses methods of interfacing KIM-1 to a typical Baudot TTY loop, as well as some of the software requirements. All of the options to be described have been tested and will work successfully. However, there are some considerations to keep in mind before deciding which method might be preferred.

Since all amateur RTTY operation uses the Baudot code, it is necessary to convert the incoming data to the ASCII code for video display presentation, or to operate an ASCII hard-copy printer. Conversely, ASCII characters from the keyboard, or from memory, must be converted to Baudot for transmission. In addition, the system should also perform some of the other functions normally expected of a RTTY terminal.

KIM-1 RTTY Functions

The program I am currently using performs nearly all of the required functions, and it can be expanded to accommodate others. These functions may be summarized as follows:

1. Baudot to ASCII conversion (receive mode), with unshift on space.
2. ASCII to Baudot conversion (send mode).
3. Automatic end-of-line (EOL) functions (2 CR 1 LF) in send mode. Keyboard line feed generates the same EOL functions.
4. Store messages from keyboard in selected memory blocks. These may be CQ calls and other canned messages, such as the station brag tape. Error correction is provided in case typing errors are made during keyboard entry.
5. Read previously stored messages for transmission. CQ calls may be repeated automatically as many times as desired.
6. Send "DE (callsign)," followed by the time generated by a real-time clock.
7. The real-time clock uses a simple crystal-controlled 1 PPS generator connected to the NMI (nonmaskable interrupt) line. (The 1 PPS output of some digital clocks can be used for this purpose.) The clock is updated from the keyboard with the current time after program execution. The 1 PPS generator is turned on at the exact minute entered.
8. CW ID (Morse identification). This routine is a modified version of WB2DFA's KIM-1 Morse keyboard program, published in January, 1977, *73*. However, the CW ID is read from a table, rather than typed from the keyboard.
9. Keyboard control of all functions. One control key is used to select the receive mode, which is disabled if any other key is depressed.

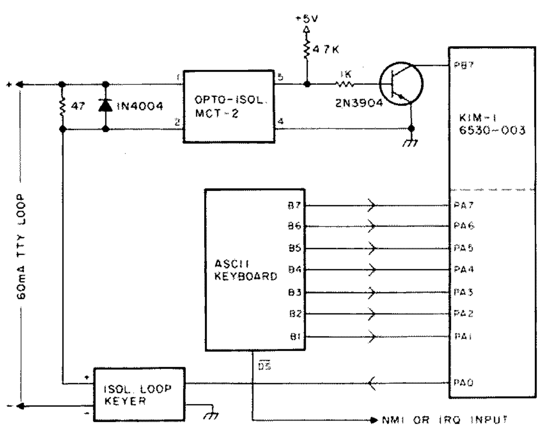

Fig. 1. Baudot serial I/O and keyboard input.

The RTTY Program

To fully implement all of the above, 892 bytes of onboard memory are presently used with the parallel I/O configuration to be described later. This includes lookup tables for the code conversion. An additional 2K bytes of an S.D. Sales 4K memory expansion board is allocated to message buffer storage. The program is suitable for firmware (ROM or EROM), with the exception of the real-time clock "digit" locations, which must be in RAM. This portion of the program can be modified.

Table 1 lists the keyboard control functions. Some ASCII keyboards are not properly coded, so you may have to make some changes to the keyboard control routine, if yours is different.

Table 2 is a combination memory map and hex listing of the program. Data in zero page locations 0000-000F is variable and does not have to be saved when making a tape recording of the program. Canned messages may be saved and loaded into memory as part of the program, so they do not have to be reentered.

For my display, Baudot carriage return is converted to a null and does nothing. Line feed is converted to space. The ASCII carriage return is converted to a blank, since the line feed takes care of EOL functions, as previously noted.

Morse equivalents for the CW ID table are listed in the lookup table in the Morse keyboard program referred to above. If any locations in the table are not filled, place word spaces (00) at the beginning or end of the table.

Serial I/O

The type of interfacing required for the external Baudot TTY loop will depend upon the user's choice of serial or parallel input/output. This will, of course, affect the software as well.

The simplest interface, from a hardware standpoint, is the serial I/O shown in Fig. 1. The interval timer of the 6530 peripheral interface is normally programmed for 45.5 baud (60 wpm) operation, but it may be changed to any other speed. On the input side, the start bit is sampled at midpoint, 11 ms after detection, and succeeding bits are sampled every 22 ms thereafter. If desired, presence of a stop bit may also be tested, and the character rejected if the stop bit is not received.

The only time a character may be displayed by the video terminal (i.e., TV typewriter) is during the stop pulse, nominally 31 ms at 60 wpm. The video terminal serial interface must be set for something faster than 300 baud, preferably at least 600 baud. The KIM monitor OUTCH routine is used to output characters to the terminal. The keyboard is connected for interrupt operation, as shown in Fig. 1, rather than to the terminal input. Therefore, terminal baud rate cannot be determined by sampling the RUBOUT key start bit, as normally done by the KIM monitor program. The data for the KIM monitor CNTL30 and CNTH30 locations (17F2 and 17F3, respectively) was read once with the keyboard connected to the terminal, and these locations are then initialized accordingly when the program is executed.

On the output side, keyboard characters are stored in a 256-byte buffer by the FIFO (first in, first out) input routine. Characters are output any time there is something in the buffer. When fetched from the FIFO, and prior to further processing, the character is displayed. This takes a finite time and adds to the Baudot output stop pulse length. Again, the interval timer is used to output serial bits. The length of the stop bit to be added by the serial output routine depends on the character display time. If the TVT clock rate is 600 baud (approximately 17 ms), an additional 22 ms stop bit will give a total of about 39 ms, slightly longer than normal, but acceptable.

Since Baudot figures and letters shift functions are generated by the program and are not displayed, a stop pulse delay to compensate must be added, using a separate interval timer routine. This same routine must be used after the line feed function of the automatic EOL.

Parallel Input

To eliminate possible software timing problems in the receive mode, the circuit of Fig. 2 was tried. This uses the receive side of a UART chip to convert the Baudot serial input to parallel outputs, which are connected to the 6530 "B" side inputs. This works somewhat in the same manner as a 6820 or 6520 PIA, but is simpler to program, since there is no control register. PB7 is the input for the "data available" flag, while PB5 is used as an output to reset the flag. This method works perfectly. Serial output and keyboard inputs were left as previously described.

Since the keyboard is not connected to the KIM-1 TTY input when using the foregoing configuration, the hex keyboard and display must be used when loading the program or otherwise using the KIM monitor. The TTY/KB switch should be placed in the KB position and returned to the TTY position after executing the program with the GO key.

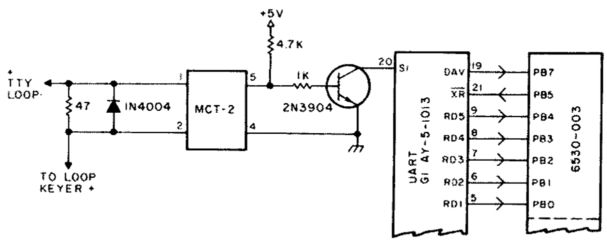

Fig. 2. Baudot parallel input (serial output and KBD input as per Fig. 1).

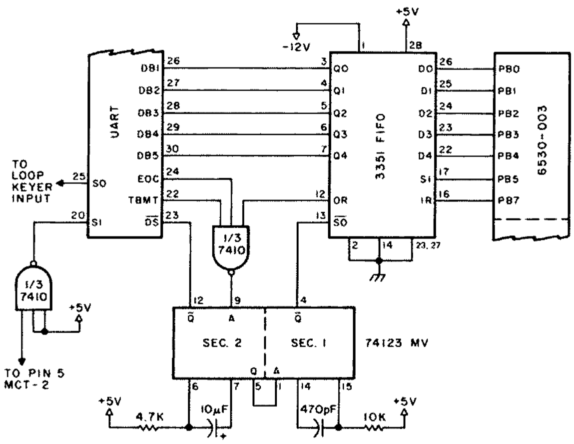

Fig. 3. Baudot parallel output with FIFO buffer.

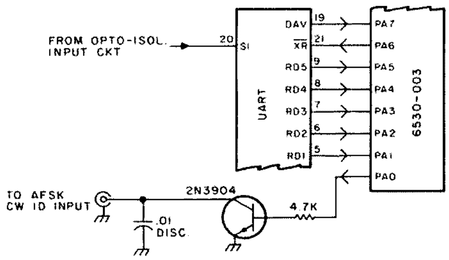

Fig. 4. Baudot parallel input and CW ID output.

ESC	Sets receive mode.
ETX (CTRL C)	Time update for real-time clock. Type in four digits using 24-hour format.
ENQ (CTRL E)	DE (callsign) and time.
DC1 (CTRL Q)	CW ID.
STX (CTRL B)	Store message (follow by 1, 2, 3, or 4).
@ (AT Sign)	Read message (follow by 1, 2, 3, or 4).
*** (Asterisk)**	End of transmission. Last character typed to end store mode. Also added by store routine, if end of message block, to prevent overwriting into next block. Message is not repeated.
+ (Plus sign)	Repeat message. Last character typed, if message is to be repeated. Location 034F contains number of times to be sent. CR LF ends transmission after last line.
<	Error correction. This is effectively a backspace and decrements the message store pointer. Used when storing a message from keyboard.

Table 1. Keyboard control functions.

Parallel Output

Having gone this far, I decided to change the output

```
0000-000F Temporary data and indirect pointers.

     Baudot-ASCII Conversion Table
0010  00 45 20 41 20 53 49 55 00 44 52 4A 4E 46 43 4B
0020  54 5A 4C 57 48 59 50 51 4F 42 47 00 4D 58 56 00
0030  00 33 20 2D 20 00 38 37 00 24 34 27 2C 21 3A 28
0040  35 22 29 32 23 36 30 31 39 3F 26 00 2E 2F 3B 00

     ASCII-Baudot Conversion Table
0050  00 03 19 0E 09 01 0D 1A 14 06 0B 0F 12 1C 0C 18
0060  16 17 0A 05 10 07 1E 13 1D 15 11 00 1F 00 00 00
0070  00 0D 11 14 09 00 1A 0B 0F 12 00 00 0C 03 1C 1D
0080  16 17 13 01 0A 10 15 07 06 18 0E 1E 00 00 00 19

    Initialization.  Set program counter to 0090 to start.
0090  D8 A9 25 8D FA 17 A9 04 8D FB 17 A9 00 85 01 85
00A0  02 A9 3F 8D 03 17 A9 41 8D 01 17 A9 40 8D 00 17
00B0  85 03
     Wait Loop.  Looks for KBD start bit or receive mode enable.
00B2  24 02 30 08 2C 00 17 10 03 20 00 01 2C 40 17 30
00C2  EF 20 00 02 4C B2 00

     Baudot-ASCII Conversion
0100  AD 00 17 4A 29 1F 85 00 C9 04 F0 0F C9 1B D0 07
0110  A9 80 85 01 4C 31 01 C9 1F D0 04 A9 00 85 01 A5
0120  00 24 01 10 02 69 20 AA B5 10 C9 00 F0 03 20 A0
0130  1E A9 00 8D 00 17 A9 40 8D 00 17 60
     Keyboard Control & ASCII-Baudot Conversion
0200  84 05 20 5A 1E A4 05 C9 1B D0 05 A9 00 85 02 60
0210  48 A9 80 85 02 68 C9 02 D0 03 4C 0E 02 C9 40 D0
0220  03 4C 4F 03 C9 05 D0 03 4C 8E 03 C9 11 D0 03 4C
0230  A9 03 C9 03 D0 03 4C 7A 04 C9 0D D0 05 A9 00 4C
0240  86 02 C9 0A D0 03 4C 99 02 C9 20 D0 0D C8 C0 43
0250  30 03 4C 99 02 A9 04 4C 86 02 85 04 24 04 70 09
0260  24 03 50 10 A9 1B 4C 6F 02 24 03 70 07 A9 1F 20
0270  86 02 A5 04 85 03 29 3F AA B5 50 C8 C0 48 D0 06
0280  20 86 02 4C 99 02 8D 02 17 09 20 8D 02 17 A9 00
0290  8D 02 17 2C 02 17 10 FB 60 A0 00 A9 08 20 86 02
02A0  A9 08 20 86 02 A9 02 20 86 02 60

     Message Select 1, 2, 3 or 4.  Used by Read & Store routines).
02AB  20 5A 1E C9 31 D0 13 A9 00 85 07 85 0D A9 05 85
02BB  08 85 0E 85 0A A9 7F 85 09 60 C9 32 D0 13 A9 80
02CB  85 07 85 0D A9 05 85 08 85 0E 85 0A A9 FF 85 09
02DB  60 C9 33 D0 15 A9 00 85 07 A9 0D A9 06 85 08 85
02EB  0E A9 FF 85 09 A9 07 85 0A 60 C9 34 D0 4E A9 00
02FB  85 07 85 0D A9 08 85 08 85 0E A9 FF 85 09 A9 0B
```

```
020B  85 0A 60
     Store Message
030E  20 AB 02 A2 00 20 5A 1E 81 07 C9 2A F0 32 C9 2B
031E  F0 2E C9 3C D0 0D C6 07 A9 FF C5 07 D0 E7 C6 08
032E  4C 13 03 E6 07 A9 00 C5 07 D0 02 E6 08 A5 09 C5
033E  07 D0 D2 A5 0A C5 08 D0 CC A9 2A 81 07 20 A0 1E
034E  60

     Read Message
034F  A9 0A 85 0B 20 AB 02 A2 00 A1 07 C9 2A F0 2F C9
035F  2B D0 12 06 0B D0 03 4C 99 02 A5 0D 85 07 A5 0E
036F  85 08 4C 56 03 84 05 48 20 A0 1E 68 A4 05 20 39
037F  02 E6 07 A9 00 C5 07 D0 CE E6 08 4C 56 03 60

     DE CALL
038E  A9 99 85 07 A9 03 85 08 4C 56 03
     Call Table & Time.  Enter ASCII equivalent of call sign in
                   null locations 039C to 03A1.
0399  44 45 20 00 00 00 00 00 00 20 30 30 30 30 5A 2A

     CW ID
03A9  A2 00 BD 18 04 85 0D E8 E0 0B D0 01 60 C9 00 D0
03B9  06 20 EA 03 4C AB 03 29 FC 85 0E A5 0D 29 07 AB
03C9  C0 00 D0 06 20 F1 03 4C AB 03 88 06 0E 90 09 20
03D9  F8 03 20 FF 03 4C C9 03 20 FF 03 20 FF 03 4C 09
03E9  03 98 48 A0 06 4C 06 04 98 48 A0 02 4C 06 04 98
03F9  48 A0 03 4C 03 04 98 48 A0 01 EE 00 17 88 A9 37
0409  8D 07 17 CD 07 17 10 FB C0 00 D0 F1 68 A8 60
0418-0421  CW ID Table.  Enter Morse equivalents for DE (space)
                   (Call Sign).

     Real-Time Clock (NMI routine).
0425  48 E6 0C A5 0C C9 3C D0 4A A9 00 85 0C EE A6 03
0435  AD A6 03 C9 3A D0 08 29 30 8D A6 03 EE A5 03 AD
0445  A5 03 C9 36 D0 08 29 30 8D A5 03 EE A4 03 AD A4
0455  03 C9 3A D0 08 29 30 8D A4 03 EE A3 03 AD A4 03
0465  C9 34 D0 0F AD A3 03 C9 32 D0 08 A9 30 8D A4 03
0475  8D A3 03 68 40

     Time Update
047A  A9 00 85 0C A2 00 20 5A 1E 9D A3 03 E8 E0 04 D0
048A  F5 60

0500-057F  MSG Block 1 (128 bytes)
0580-05FF  MSG Block 2  (128 bytes)
0600-07FF  MSG Block 3 (512 bytes)
0800-0BFF  MSG Block 4 (1024 bytes)
```

Table 2. Memory map and program listing.

to parallel operation also, as shown in Fig. 3. To make things easier, the parallel input was changed over to the 6530 "A" side, so PA∅ could be programmed for the CW ID output. Now the "B" side is used for the output, as seen in Fig. 4.

Obviously, this configuration leaves no parallel input ports for the keyboard. It is connected to the TVT in the normal manner, and the KIM monitor GETCH routine is used to fetch keyboard characters. The software FIFO, therefore, cannot be used. The solution to this is to make a trade-off and use a

Fairchild 3351 FIFO chip. Note that, in this case, the FIFO is on the Baudot output rather than the keyboard input. Although the 3351 has a capacity of only 40 characters, this is adequate to absorb data at normal typing rates somewhat in excess of six characters per second, as well as providing buffering for the Baudot figures and letters shifts and EOL functions. PB5 is the data strobe for the 3351 shift in (SI) input, and PB7 serves as the input ready (IR) flag.

The UART is configured for five bits per character and one stop bit. The actual time between characters on transmit is set by the 74123 dual MV timing and results in characters being shifted out of the FIFO at a smooth rate. A crystal-controlled clock is not necessary. At low data rates, a 555 timer clock is perfectly adequate and rarely needs adjustment. The clock is set to 728 Hz for 45.5 baud operation.

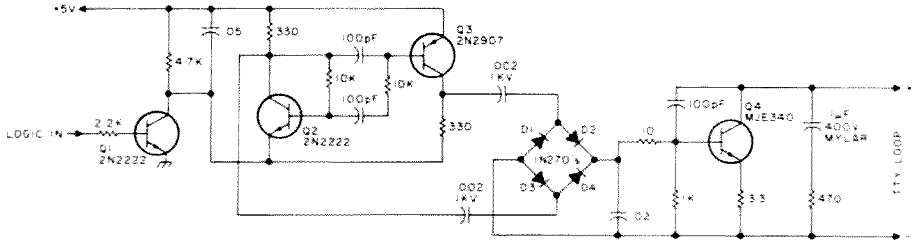

Fig. 5. Isolated loop keyer. Mark — high; space — low. Resistors — ¼ W; capacitors — disc ceramic, except as noted.

Loop Isolation

I use a 60 mA loop, which is common for both send and receive. A printer is always in the line for hard copy. The optoisolator is one of several available types, such as the Motorola MCT2. The loop-keyer output is completely isolated from ground and the input. Fig. 5 is a schematic diagram of the loop keyer. It's a keyed, balanced multivibrator, running at about 750 kHz, capacitively coupled to a diode bridge rectifier and loop-keying transistor, Q4. The keying transistor can be any high-voltage NPN-type, such as the MJE340, 2N5655, or 2N3440. Q1, Q2, and Q3 can be any small-signal switching transistors. Note that Q3 must be a PNP type.

The loop keyer is sensitive to nearby rf fields when you operate a transmitter at high power, so each side of the loop jack at the KIM-1 end must be bypassed to ground. If CW ID output is used, the output jack should be bypassed for the same reason. A shielded cable to the AFSK input should be used. KIM-1 and all associated boards appear to be immune to rf, even unshielded. I have not had any problems in this respect since taking the precautions just mentioned.

Conclusion

I hope the foregoing information will be of help to anyone wishing to use his KIM-1 for RTTY. Unfortunately, space does not permit an assembly-type program listing due to its length. I will be glad to answer all correspondence, but please include a self-addressed stamped envelope. I should be able to provide a copy of the program (and perhaps a cassette tape) at reasonable cost to help defray the expenses involved in preparation. ■

Bill Welborn K9PTI
2221 West Franklin Street
Evansville IN 47712

A Secret Weapon For Road Rallies

Aside from ham radio and computers, one of the more enjoyable hobbies I pursue from time to time is that of driving (or navigating) in TSD road rallies. The letters stand for "time, speed, and distance." If you run rallies, or know a friend who does, your computer can give you a secret weapon to help you win.

These events are not races, at least not in the conventional sense. You are given a set of instructions. Then you follow them. Sound dull? Well, it isn't! The object of the rally is to exactly follow the instructions, to maintain an exact speed, and to get where you are supposed to get after a precise elapsed time. Penalty points are given for being either early or late at the destinations. Usually, there are several destinations – called checkpoints – in every TSD rally. To give you some idea of the precision driving required, a penalty point is equal to an arrival time (early or late) of one-hundredth minute (.6 sec) from the scheduled time. A typical winner, in our club, will have a score of 50 to 100, indicating a total error of one-half minute, after three or four *hours* of driving. Of course, low score wins.

Several things are added for spice. When you start the rally, you don't know how far the first checkpoint is (or any of the others, for that matter). Nor do you even know where the checkpoints are, or the necessary average speed to get there on time, or the time you must expend in getting there. Distances are seldom marked on the instructions. All this information is known only to the rallymaster and his workers.

The instructions are rather like a computer program. Here is a short excerpt from a recent one:

. . . .
CAST 30
Right at Kenny Road
Left at "Y"
Left after SRIP "Garage"
CAST 42
Right 3d opportunity
. . . .
. . . .

This would be interpreted as follows: Change Average Speed To thirty miles per hour; when you get to Kenny Road, make a right turn; at the next "Y" in the road, after your right turn, take the left fork; you should see a Sign that Reads In Part "Garage" – take the next left (it may be right there, or it may be miles down the road); as soon as you turn, Change Average Speed To forty-two miles per hour; at the third chance thereafter that you have to do so, turn right; and so on.

Of course, the sign with "Garage" on it may be faded and half-covered with weeds, the road may be one on which no sane person would go over 20 mph, one of the three "opportunities" will doubtless be impossible to spot (or between the first and second road will be a long private drive that gets counted as an "opportunity" by half the contestants when it isn't), and so on. These are the *simple* traps you will encounter; rallymasters delight in messing you up. Anyway, you get the point – it is a real job just to stay on course.

Besides helping the driver stay on course and keeping up with the instructions, the navigator has the job of calculating the average speed of the car. It is to make this job easier that this article was written.

Time, speed, and distance problems are all solved by the simple formula: D=RT, where D is distance, R is rate (speed), and T is time. Know any two, and you can find the other. In a rally, you will know distance and time from the last speed change in the instructions; you will be trying to calculate average speed in miles per hour by the formula: $R_{mph} = (D/T)*60$. You will probably want to make a calculation every mile, because tenths of a second are important, and there might never be a chance to make good the loss of even a few seconds.

The navigator is necessarily going to be busy with a stopwatch, pencil, calculator, and odometer for the entire rally. He may get so busy that he loses track of where his car is.

You *can* buy an electromechanical gadget that will keep track of elapsed time and of average speed, but they are very expensive. If you are a ham, you might kludge up a small terminal to your mobile rig and have a program running on the computer at home, which will make your calculations for you. But terminals aren't that

cheap, either. (And watch sending ASCII over the air!)

The program shown here (Fig. 1) is a cheap and simple answer. It allows you to work in time, not average speed. It is far more helpful to know that you are three seconds ahead of time than to know you are averaging 43.2 mph, when the instructions call for 42 mph. (Why? Because the more miles you drive with a constant error in speed, the further off you become in time. In the heat of a rally, a fraction of mph speed error may not impress you as important, even though you've traveled eight or more miles.)

What you get from the program is a printout of speed, distance, and time. Your navigator turns to the sheet with the correct speed for that leg, zeros the mileage indicator in your car, and zeros the stopwatch. Then, every mile or half-mile, he looks at the stopwatch and compares it with the time next to the mileage which you have traveled. He can then tell you how many seconds you are ahead or behind where you should be at that point. It is then a very simple matter for you, the driver, to make whatever correction is necessary. At the end of the next mile, or half-mile, another check is made and further correction taken. And so on, throughout the rally.

Sure, the formula is not that hard to run on a calculator. But, to get time-error that way, the old navigator is going to run two calculations every mile. Try even the simplest calculation in a rally; I've never known any navigator who didn't mess up at least a third of his calculations on the first try. And he has his eyes off the road for too long.

Yes, I *know* you can buy time-speed-distance charts at not too great an expense. But, first of all, they can't be tailored for whatever distance interval you wish. This program can. Secondly, they are much harder to read (in my experience at least) than a computer printout. And, finally, well, heck, you *want* a use for that new micro, don't you?

```
05 REM THIS PROGRAM CALCULATES TIME IN MINUTES AND TENTHS OF MIN.
10 REM  SET UP THE OUTER LOOP.  R=SPEED IN MPH.
20 FOR R=25 TO 55
30 REM  PRINT THE HEADINGS.
40 PRINT "SPEED","DISTANCE","TIME"
50 REM  SET UP THE INNER LOOP.  D=DISTANCE IN MILES
60 FOR D=1 TO 20  STEP .5
70 REM  CALCULATE TIME
80 LET T=(D/R)*60
90 REM  PRINT IT ALL OUT UNDER THE CORRECT HEADING
100 PRINT R,D,T
110 REM  CYCLE THE INNER LOOP -- WHEN FINISHED, PRINT BLANK LINE AND
115 REM  CYCLE THE OUTER LOOP.
120 NEXT D
130 PRINT
140 NEXT R
160 REM  WHEN R=55, THE PROGRAM ENDS.
170 END
```

Fig. 1. BASIC program to calculate "TIME" in minutes and tenths of minutes. See text for full explanation.

The program is written in Dartmouth BASIC. It was run on an IBM 370. It should work on most small BASIC interpreters. It will *not* work on an integer system.

It is so simple that it almost explains itself. There are two loops, one nested inside the other. The outer loop contains the average speed. It is shown starting at 25 mph, but this could be any figure — it depends on the minimum speed at which rallies in your area are run. This loop terminates at 55 mph because no rally instructions can tell you to drive at an illegal speed.

For each step of the outer loop, the inner loop (distance) steps 39 times. Each time it steps, the program calculates time. Then, speed, distance, and time are printed out and the inner loop steps again. When distance reaches 20, a blank line is printed, a new heading is printed, and the outer loop steps to the next speed. Then, the whole process is repeated, and repeated, and repeated.

About two *hours* after you type "run," you will have produced fourteen feet of copy. (This is assuming a step of .5 and a 110 baud printer. By the way, CPU time used on an IBM 370 is just over nine seconds.)

If your BASIC does not have the step feature in its "FOR . . . NEXT" statement, just leave that out. The program will give you printout for whole miles. This works just as well. Leave out the "REMARKS" to save space. If your system can use multiple statements per line, great.

If you wish to provide for greater mileage in the inner loop, put in whatever you like. You-all in the wide-open southwest might want to go to thirty miles or even more.

```
20 REM  SET UP OUTER LOOP.  R=SPEED IN MPH
30 FOR R=25 TO 55
40 REM  PRINT THE HEADINGS
50 PRINT "SPEED","DISTANCE","TIME"
60 REM  SET UP THE INNER LOOP.  D=DISTANCE IN MILES
70 FOR D=1 TO 20  STEP .5
80 REM  CALCULATE TIME IN MINUTES AND TENTHS OF MINUTES, FIRST.
90 LET T=(T/R)*60
100 REM  ROUND THIS TO NEAREST ONE-THOUSANTH OF MINUTE
110 LET T1=INT(T*1000+.5)/1000
120 REM  TAKE MINUTES ONLY AND CALL IT T2.
130 LET T2=INT(T1)
140 REM  NOW, GET JUST THE FRACTION AND CALL IT T3
150 LET T3=T1-T2
160 REM  CONVERT THIS FRACTION TO SECONDS AND TENTHS
170 LET T4=T3*60
180 REM  PRINT EVERYTHING IN RIGHT COLUMN.
190 PRINT R,D,T2:":":T4
200 REM  CYCLE THE INNER LOOP
210 NEXT D
220 REM  WHEN OUT OF DISTANCES, PRINT A BLANK LINE AND CYCLE OUTER LOOP.
230 PRINT
240 NEXT R
250 END
```

Fig. 2. The program converted to calculate "TIME" in minutes, seconds, and tenths of seconds.

Frankly, my present version of this printout only goes to fifteen miles. I don't need that much, usually, in the rallies we have around here.

If you just like a lot of paper used up, make the inner loop step = .25. This will give you quarter-mile times for each speed. I doubt you'll ever use it, and it triples the length of the printout.

One very useful change to the program is shown in Fig. 2. This gives printout for time in minutes, seconds, and tenths of seconds instead of minutes and tenths of minutes. Of course, which you use will depend on how your stopwatch is calibrated. The new code will take the decimal fractions of minutes and convert them to seconds and tenths of seconds. A formatting statement inserts a colon for easier reading.

I use the program's output cut into sheets and staple them at the upper left. The navigator simply flips through the pages for the correct speed, as shown for that leg of the instructions. Then he's set. Those of you handy with tools might want to construct a box-like holder with a dowel at the top and bottom. Then the printout could be scrolled past a window cut into the front of the box. For this display, the printout would be better without the headings before each speed. Change the location of that print statement so that it does not pass by on each execution of the outer loop (i.e., move it to the first line of the program).

If you are not into road rallies already, I certainly hope this article has given you the bug, as well as shown you another use for that micro. You certainly don't need a sports car to participate in TSD rallies. Just zap up the secret weapon, find out where your local Sports Car Club of America chapter is going to hold its next rally, and beat 'em all! ■

FCC Math

from page 14

here, you round to the nearest whole number unless, as in the earlier one we did, *all* would be rounded down or *all* up following the nearest whole number rule, thereby introducing unnecessary inaccuracy. Putting these together as we have learned to do for convenient multiplication, we get: $2 \times 3 \times 2 \times 2 \times 10^{7+-2}$, which is 24×10^5. And that's $2.4 \times 10^1 \times 10^5$, which is 2.4×10^6 or 2,400,000 Ohms, one heck of a lot of resistance to flow of current at 21.3 MHz!

At 60 Hz, on the other hand, the reactance of that same coil is 2(3.14)(60)(0.017), which is $2 \times 3 \times (6 \times 10^1) \times (2 \times 10^{-2})$, or $2 \times 3 \times 6 \times 2 \times 10^{-1}$, which is 72×10^{-1} or $7.2 \times 10^1 \times 10^{-1}$, which is 7.2×10^0 or simply 7.2 Ohms (of course, after a while you'd do much or most of that in your head, with no pencil, paper, or calculator necessary!).

That's very little resistance to current flow at 60 Hz. Obviously, coils and capacitors are neat devices for separating one frequency of current from another. You'll notice, too, that they do opposite things. Coils resist the high frequencies, letting low frequencies through, whereas capacitors resist the low frequencies, letting high frequencies through.

Well, enough for this installment. Next time, we'll use the math skills we now possess on all kinds of formulas. In fact, if you have followed along thus far, you now possess the knowledge to handle just about any kind of math that may be thrown your way in FCC exams. It's just a matter now of practicing these skills to the point that they are readily available when needed.

Here's a bit of such practice. Work and answers follow.

Exercise 3:

(1) Compute the reactance of these capacitors at (a) 900 Hz, and (b) 28.5 MHz:

(i) 80 pF (ii) 3 μF

(2) Compute the reactance of these coils at (a) 6 kHz, and (b) 52 MHz:

(i) 150 μH (ii) 7 H

WORK AND ANSWERS TO EXERCISES

Exercise 1:

(1)	(a) 2.71×10^{-3}	(b) 5.9×10^{-11}	(c) 7.89×10^7	(d) 5×10^{-1}
(2)	(a) 0.00725	(b) 0.0000000000086	(c) 9,450,000	

Exercise 2:

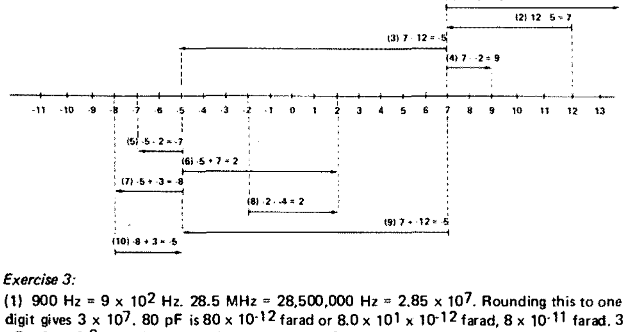

Exercise 3:

(1) 900 Hz = 9×10^2 Hz. 28.5 MHz = 28,500,000 Hz = 2.85×10^7. Rounding this to one digit gives 3×10^7. 80 pF is 80×10^{-12} farad or $8.0 \times 10^1 \times 10^{-12}$ farad, 8×10^{-11} farad. 3 μF is 3×10^{-6} farad. We'll round π, pi, to simply 3.

(ia) 80 pF at 900 Hz: $1/(2 \times 3 \times 9 \times 8 \times 10^{2+-11}) = 1/(432 \times 10^{-9})$. $432 \times 10^{-9} = 4.32 \times 10^2 \times 10^{-9}$, rounded down, simply 4×10^{-7}. $(10 \times 10^{-1})/(4 \times 10^{-7}) = 2.5 \times 10^{-1-\,-7}$ or 2.5×10^6, 2,500,000 Ohms.

(ib) 80 pF at 28.5 MHz: The bottom of the fraction is $2 \times 3 \times 3 \times 8 \times 10^{7+-11}$, 144×10^{-4}, which is $1.44 \times 10^2 \times 10^{-4}$, which (rounded) is 1×10^{-2}. The fraction, then, is: $(1 \times 10^0)/(1 \times 10^{-2}) = 1 \times 10^2$, which is 100 Ohms. Notice how the reactance had dropped from 2½ *million* Ohms at 900 Hz to a mere 100 Ohms at 28.5 MHz.

(iia) 3 μF at 900 Hz: The bottom is $2 \times 3 \times 9 \times 3 \times 10^{2+-6} = 162 \times 10^{-4}$ which equals $1.62 \times 10^2 \times 10^{-4}$, which rounded out equals 2×10^{-2}, so the fraction is: $(10 \times 10^{-1})/(2 \times 10^2)$ which gives $5 \times 10^{-1-\,-2}$ or 5×10^1, 50 Ohms.

(iib) 3 μF at 28.5 MHz: The bottom is $2 \times 3 \times 3 \times 3 \times 10^{7+-6} = 54 \times 10^1$, which is 5.4×10^2 or rounded, simply 5×10^2. The fraction then becomes: $(10 \times 10^{-1})/(5 \times 10^2)$, which gives $2 \times 10^{-1-\,-2}$, 2×10^{-3} or 0.002 Ohms. The reactance is not large with this big a capacitor, but 50 Ohms is still one heck of a lot more than 0.002 Ohms!

(2) 6 kHz is 6×10^3 Hz. 52 MHz is 52×10^6 Hz or $5.2 \times 10^1 \times 10^6$ Hz, which (rounded) is 5×10^7 Hz. 150 H is 150×10^{-6}, which is $1.5 \times 10^2 \times 10^{-6}$ or, rounded, 2×10^{-4} H. 7 H is fine as it stands. The formula, remember, is simply $X_L = 2\,fL$.

(ia) 150 μH at 6 kHz: $X_L = 2 \times 3 \times 6 \times 2 \times 10^{3+-4}$, which is 72×10^{-1}, or $7.2 \times 10^1 \times 10^{-1}$, which is 7.2×10^0, 7.2×1, or simply 7.2 Ohms, which rounds out to 7 Ohms (not much resistance to that frequency).

(ib) 150 μH at 52 MHz: $X_L = 2 \times 3 \times 5 \times 2 \times 10^{7+-4}$, 60×10^3, which is $6 \times 10^1 \times 10^3$ or 6×10^4, 60,000 Ohms, or 60 kilohms. Lots of resistance!

(iia) 7 H at 6 kHz: $X_L = 2 \times 3 \times 7 \times 6 \times 10^3$, which is 252×10^3 or $2.52 \times 10^2 \times 10^3$, which is, rounded out, 3×10^5 or 300,000 Ohms, 300 kilohms.

(iib) 7 H at 52 MHz: $X_L = 2 \times 3 \times 7 \times 5 \times 10^7$ or 210×10^7, which is $2.1 \times 10^2 \times 10^7$ or, rounded out, 2×10^9, 2 billion Ohms – again, one heckuva lot!

FCC

Reprinted from the Federal Register.

CHAPTER I—FEDERAL COMMUNICATIONS COMMISSION

[FCC 77-793]

PART 2—FREQUENCY ALLOCATIONS AND RADIO TREATY MATTERS: GENERAL RULES AND REGULATIONS

Deleting Footnote NG 13 Pertaining to Amateur Radio Operation in 220–225 MHz Band in Portions of States of Texas and New Mexico

AGENCY: Federal Communications Commission.

ACTION: Rule Amendment.

SUMMARY: This document removes restrictions on the use of the 220–225 MHZ band in portions of Texas and New Mexico by amateur radio operations because those restrictions are no longer necessary.

EFFECTIVE DATE: December 12, 1977.

FOR FURTHER INFORMATION CONTACT:

Benjamin Perez, Spectrum Planning & Coordination Branch, Office of Chief Engineer, 202-632-6350.

ORDER

Adopted: November 22, 1977.

Released: December 1, 1977.

In the matter of amendment of Part 2 of the Commission's Rules and regulations to delete footnote NG 13 pertaining to amateur radio operation in the 220–225 MHz band in portions of the States of Texas and New Mexico.

1. The Commission has been advised by the Office of Telecommunications Policy, that the provisions of footnote NG 13 to the Table of Frequency Allocations, § 2.106 of the Commission's rules are no longer required. The footnote imposes restrictions on the secondary use, by the amateur radio service, of the 220–225 MHz band in certain areas of the United States.

2. The deletion of NG 13 would remove the restriction of the use of the 220–225 MHz band by amateur stations engaged in normal amateur operations between the hours of 0500 and 1800 local time Monday through Friday inclusive, of each week in those portions of the States of Texas and New Mexico in the area bounded on the south by parallel 31°53'N., on the east by longitude 105°40'W., on the north by parallel 33°24'N. and on the west by longitude 106°40'W. The amateur service would then be allowed to operate on the 220–225 MHz band in all portions of the United States subject to the continuing restriction of footnote U.S. 34 (prohibiting harmful interference to the radiolocation service).

3. Since the deletion of NG 13 will have no adverse effect on non-Government licensees, we anticipate no comments in this matter; therefore, compliance with the notice and public procedure provisions of the Administrative Procedure Act, 5 U.S.C. 553 (b) and (c), is believed to be unnecessary (5 U.S.C. 553 (c)(3)(B), 47 CFR 1.412(c)).

4. Furthermore, since the substance of this rule amendment would be to relieve a restriction, compliance with the effective date provision of the Administrative Procedure Act, 5 U.S.C. 553(d) would not be in the public interest (5 U.S.C. 553(d)(1); 47 CFR 1.427).

5. *Accordingly, it is ordered*, That effective December 12, 1977, §2.106 of the rules is amended by deleting footnote NG 13. Authority for this action is contained in Sections 4(i) and 303 of the Communications Act of 1934, as amended.

(Secs. 4, 303, 48 Stat., as amended, 1066, 1082 (47 U.S.C. 154, 303).)

FEDERAL COMMUNICATIONS COMMISSION,
WILLIAM J. TRICARICO,
Acting Secretary.

Francis J. O'Reilly
42 Markwood Rd.
Ardsley NY 10502

Looking For A Micro?

—*consider the KIM-1*

If you are in the market for a complete microcomputer, but your funds are somewhat limited, the KIM-1 is for you.

For $245 the KIM-1 comes complete with CPU, 1024 (1K) bytes of random access (read/write) memory, 2048 (2K) bytes of read only memory, a 23-pad keyboard for hexadecimal input and limited front panel capabilities, a six-digit seven-segment series of light emitting diodes (LEDs) for output, a cassette interface, and a serial teleprinter interface. The only thing the KIM-1 lacks is a power supply. If you are going to run a cassette, you will need a +5 V and a +12 V power supply; otherwise, +5 V at 1.2 Amps will be sufficient. The power supply can be built from a schematic supplied in the back of the KIM-1 *User's Manual*, or you can purchase one at a local radio store for under $50.

The CPU is the MCS6502. It is capable of addressing up to 65,536 (64K) bytes of memory. Although the instruction set of the 6502 is somewhat limited when compared to the 8080A, which is the chip used by the Altair 8800B and others, it is more than sufficient for the person who is just starting to program. (The 6502 has 56 instructions, as compared to the 78 instructions for the 8080A.) With some ingenuity, the 6502 instruction set can go quite a long way. The system clock runs at 1 MHz. The instruction execution time runs from 2 to 7 cycles, with 4 cycles being the average. This means the 6502 can execute up to approximately 250,000 instructions per second. This is only half as fast as the machines that use the 8080A; however, it is still fast enough for most applications.

The 1K of random access memory that is provided onboard is not enough to do much in the way of serious programming. It is, however, sufficient to learn basic machine level programming skills.

Input is through a keyboard located at the lower right-hand corner of the board. If you have an ASR-33 teletype with the 20 mA loop, it can be connected directly to the machine. Lacking this, you are restricted to the keyboard. I would like to take this time to comment on the positioning of the keyboard. I am left-handed; as a result, I find that I must be aware of where I rest my hand, as the two interfaces are directly to the left of the keyboard. This could be improved by having the keyboard remote from the machine itself. This is, however, a relatively minor problem. The keys on the keyboard are as follows: O-F hex – instruction and data input; AD – enter address mode; DA – enter data mode; + – increment address by 1; PC – restore program counter; ST – generate interrupt (STOP); GO – begin program at current program counter; RS – reset to monitor control; and SST – a slide switch for single-step execution of programs.

Output is through 6 seven-segment LEDs. The left four LEDs are separated from the right two, making it easy to read the display. The display is located directly above the keyboard.

The 2K bytes of read only memory contain a monitor program which basically controls input/output operations, including cassette operation, and serial teleprinter operation.

My main objection to the design of the KIM is the absence of sockets for the 22 integrated circuits. This is not a problem unless one burns out. If one should burn out, it will take a lot of time and patience to replace it. The board has been silk-screened to prevent accidentally shorting out adjacent foils. It should be noted that a potentiometer has been utilized as part of the onboard audio cassette interface. This potentiometer is preset at the factory and should not be adjusted by the user.

The onboard interfaces are for an audio cassette and a serial teleprinter (specifically the ASR-33). The first expansion recommended for the KIM is to add an audio cassette. When you are working on small programs, it is no big deal to key in your program, turn the machine off, and key the program in at a later time; however, when you start to write long programs, keying in a long program every time you turn on your machine becomes a hassle. If you can store that program and load it without having to key it in, you have overcome this problem.

The primary solution to this problem, employed by microcomputers, is storage on audio cassette tape. This is fine – that is, until you drop a bit. Unlike digital recorders in the big machines, an audio recorder does not go back and make sure it has recorded the data properly. You will not discover the error until you try to load the program, and, for some reason, it doesn't work. This is a major problem with audio cassettes and one not easily reckoned with.

The advantage of audio cassette recorders is that they are inexpensive. However, the serious user will soon find that he needs to go to another form of mass storage, such as floppy disk.

The second interface provided is for a serial teleprinter. The ASR-33 is the recommended machine. While this is a fine machine, it is relatively expensive (between 500 and 1000 dollars). This is one expansion I don't plan to do for a long while. If I had that kind of money, I would have bought a bigger machine. I would recommend to anyone who is looking toward terminals to consider a CRT (Cathode Ray Tube) terminal, as one can be had for around $250, although you'll have to interface it

yourself.

The documentation on the KIM is excellent. It consists of three books, a wall chart, and a card listing the instruction set. The books include the *User's Manual*, which should be read first, the *Programming Manual*, and the *Hardware Manual*. The wall chart shows how the hardware is connected, and the instruction set card lists the mnemonics and op codes with variations.

Getting the KIM-1 up and running took me almost a week. The main problem was getting the power supply ready to supply power. My power supply is a Control Data Corporation model, supplied by Electravalue Industrial for $50. Initially, upon unpacking the supply, I was terrified by all the cables. However, upon more careful inspection, I was able to determine how to hook it up to the KIM. The problem lies in the number of connectors coming from the supply and the lack of an ac power cord. It took three days of searching over the greater New York area before I finally found one suitable for the job at Westchester Electronics in White Plains.

Once the power considerations were taken care of, I was able to turn on the machine and run the test problem in the *User's Manual* – a simple 8-bit addition routine to check the operation of the KIM. The program worked perfectly, and I have had no problems with my machine yet.

Overall, the KIM-1 is an excellent beginning machine. Among other things, it teaches you how much you can really do with only 1K of memory, something that is forgotten with today's massive machines. More importantly, however, the KIM-1 (at $245) makes computing available to anyone who wants it, and it is versatile enough to satisfy most people's needs. ■

RTTY Loop

Marc I. Leavey, M.D. WA3AJR
4006 Winlee Road
Randallstown MD 21133

Happy New Year! With the long winter nights, who wants to go outdoors and freeze? This is the perfect time to get on the air with RTTY. If you have already jumped in, fine! Welcome to the club! For those of you still unsure of how to act on the green keys, we will have a discussion of on-the-air techniques this month.

To begin with, where do you operate RTTY? There are three great hoards of Teletype™ enthusiasts: the 80, 20, and 2 meter gangs. This is not to say that you won't find RTTY on 28 MHz, but the population is greater on the above noted bands. On HF, operation is in the CW segment of the bands with FSK operation. As a starting point, you might try 3620 kHz and 14,080 kHz, plus or minus 10 kHz. Which one to start? As with other modes, 80 and 20 have propagation characteristics which influence the choice. From here in Baltimore, 80 provides reliable east coast to central communications without difficulty, whereas 20 is the DX band, as always. Stations normally operate on the same frequency and shift, with mark and space zero-beat. By far, 170 Hz shift now predominates.

Two meter AFSK has two camps, AM and FM, and you will have to look around to see what's in your area. Here in Baltimore, AFSK is frequently heard on the BRATS (Baltimore Radio Amateur Television Society) repeater on 147.63/147.03 MHz, and 146.58 MHz FM simplex. Standard 2126/2975 Hz tones are used, with 850 Hz shift dominant.

If you had to draw a parallel, RTTY operation would more closely identify with CW procedure than radiotelephone. Abbreviations, "Q" signals, and operating signs are all in common use. To satisfy the FCC, you must identify *your* station at the beginning and ending of each contact, and at least every ten minutes during one, by a means *other* than RTTY. Typically, this means Morse code, although some AFSK stations have been known to use voice. The Morse can be sent in any number of ways, including (but not limited to) FSK of the same shift as the RTTY, "narrow shift" of 50 Hz or so, so as not to false the demodulator, or make-and-break CW. The Morse may be generated by a conventional hand key, operating the BREAK key on the machine, a special "stunt box," or by a novel use of standard Teletype™ tape, which will be discussed in a future column.

If I had but one bit of advice to give to the newcomer to RTTY, it would be: *Please learn to touch-type!* There are few things as agonizing as watching a biblical (seek and ye shall find) typist, hunting and pecking along. If you just can't learn to type, make the acquisition of punched tape equipment your first priority, and punch a reply tape while the other guy is transmitting. You both will appreciate it.

Another common trap is to overdo the abbreviation bit. Sure, we all use "DE" and "CQ". And somehow, a sign-off would not sound complete without "73" or maybe "BCNU". But don't get carried away into typing: "W3NSD DE WA3AJR RR ON UR XMSN OM ES TNX FER FB QSO . . . QTH HR BLTO MD ABT 30 MI NE OF WASH DC . . . SO HW CPY?????? BK BK CW ID . . ." I mean, really now! No further comment needed.

So, what do you do, you might ask. To call CQ, set up a tape something like this: "CQ CQ CQ CQ CQ CQ CQ CQ CQ CQ CQ CQ CQ CQ DE WA3AJR WA3AJR WA3AJR CQ DE WA3AJR BALTIMORE MARYLAND," which repeats for thirty seconds or a minute. Don't forget to send your call by Morse at the end. Another useful tape is a "brag tape." This gives the rundown on where you are, your transmitter, receiver, RTTY gear, and the like. Frequently sent in the beginning of a contact, it dispenses with all the routine information and often provides a springboard for an interesting QSO. In fact, tape is used to transmit all kinds of things, both spontaneous and prepared. A full discussion of this storage form will also be presented in months to come.

Hopefully, you've got some idea of what to do on RTTY. After monitoring a bit and slinging some of the slang, you should have no trouble at all.

A note from Tom Hill WA4ECB reminded me that there are two kinds of selector magnets: pulling and holding. The rundown given in the September column was correct only for holding magnets. That is, series for 20 mA, parallel for 60 mA operation. The older pulling type are wired in *series* for 60 mA service. Pulling selector magnets depend on magnetic attraction to draw the pole piece to the magnet. With the later holding magnet, a mechanical cam does the work of bringing the pole up; all the magnet need do is hold it there. This requires less energy, thus reducing magnetic "kick-back" and radio interference. Sorry about the confusion, and a tip of the hat to Tom.

Next month, we will consider storage techniques for the masses of material that RTTY produces. In the meantime, I'll keep a lookout for some of you around 3623 kHz. Notes and questions are welcome, and may be sent to me via *73 Magazine* or at the above address. Items of general interest will be answered in this column. Please enclose a stamped, self-addressed envelope if you want a personal reply.

Oscar Orbits

FINDING OSCAR

The listed data tells you the time and place OSCAR crosses the equator in an ascending orbit for the first time each day. To calculate successive orbits, make a list of the first orbit number and the next twelve orbits for that day. List the time of the first orbit. Each successive orbit is 115 minutes later (two hours less five minutes). The chart gives the longitude of the first crossing. Add 29° for each succeeding orbit. When OSCAR is ascending on the other side of the world, it will descend over you. To find the equatorial descending longitude, subtract 166 degrees from the ascending longitude. To find the time it passes the North Pole, add 29 minutes to the time it passes the equator. You should be able to hear OSCAR when it is within 45 degrees of you. The easiest way to do this is to take a globe and draw a circle with a radius of 2480 miles (4000 kilometers) from the home QTH. If it passes right overhead, you should be able to hear it for about 24 minutes total. OSCAR will pass an imaginary line drawn from San Francisco to Norfolk about 12 minutes after passing the equator. Add about a minute for each 200 miles that you live north of this line. If OSCAR passes 15 degrees from you, add another minute; at 30 degrees, three minutes; at 45 degrees, ten minutes. Mode A: 145.85-.95 MHz uplink, 29.4-29.5 MHz downlink, beacon at 29.502 MHz. Mode B: 432.125-.175 MHz uplink, 145.975-.925 MHz downlink, beacon at 145.972 MHz.

Oscar 7 Orbital Information

Orbit	Date (Feb)	Time (GMT)	Longitude of Eq. Crossing °W
14700 Bbn	1	0152:12	84.1
14712 Abn	2	0051:33	68.9
14725 Bbn	3	0145:50	82.5
14737 Bbn	4	0045:11	67.3
14750 Abn	5	0139:28	80.9
14762 Bbn	6	0038:48	65.8
14775 Bbn	7	0133:05	79.3
14787 Abn	8	0032:26	64.2
14800 Abn	9	0126:43	77.8
14812 Bbn	10	0026:04	62.6
14825 Abn	11	0120:21	76.2
14837 Bbn	12	0019:41	61.1
14850 Bbn	13	0113:59	74.6
14862 Abn	14	0013:19	59.5
14875 Bbn	15	0107:36	73.1
14887 Bbn	16	0006:57	57.9
14900 Abn	17	0101:14	71.5
14912 Bbn	18	0000:35	56.4
14925 Bbn	19	0054:52	69.9
14938 Abn	20	0149:09	83.5
14950 Bbn	21	0048:30	68.4
14963 Bbn	22	0142:47	82.0
14975 Abn	23	0042:07	66.8
14988 Bbn	24	0136:25	80.4
15000 Bbn	25	0035:45	65.2
15013 Abn	26	0130:02	78.8
15025 Bbn	27	0029:23	63.7
15038 Bbn	28	0123:40	77.3

Robert J. Bishop
1143 W. Badillo # E
Covina CA 91722

Fiendish New QUBIC Program

The game of QUBIC® is a three-dimensional extension of ordinary tic-tac-toe. Instead of playing on a 3 x 3 plane, QUBIC is played in a 4 x 4 x 4 cube. The object of the game is for you to get four markers in a straight line before the computer does.

There are many versions of QUBIC around, but the most popular one seems to be the version presented in *101 BASIC Computer Games*, published by Digital Equipment Corporation (DEC). I would like to suggest several changes to the DEC program that might improve its playing and ease of use.

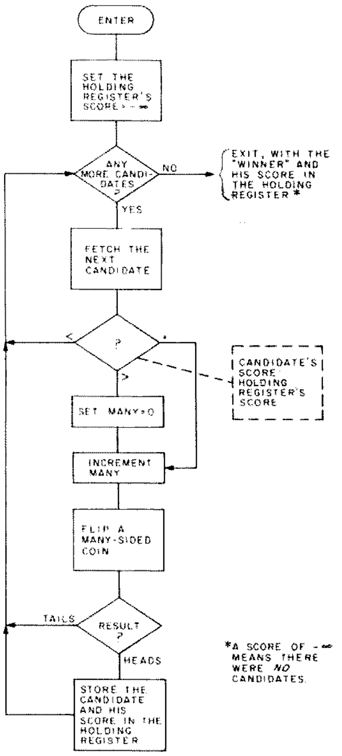

Fig. 1. Flowchart of random selection algorithm.

First of all, there seem to be errors in four of the DATA statements. For example, statements 1523 and 1529 both define the same plane, even though they each define different sets of lines through the cube.

Next, the DEC program does not display the game cube; it makes the player keep track of all the moves on a separate piece of paper. This kind of bookkeeping task should be left for the computer to do.

Finally, the program is invariant in its playing. Once you find a way to win, you can *always* win, just by making the very same moves the next time you play.

The QUBIC program presented in this article is my own attempt at producing an improved and original version of the game. In addition to indicating its move, the computer displays the cube, showing you the current state of the game. The program also tests for wins and ties.

Probably the most interesting feature of the program is its ability to play a different game each time. At first thought this may not seem to involve anything more than just using the RND function, right?

Random Selection of "Serial" Candidates

In many kinds of games in which the computer serves as an opponent, it is usually necessary for the computer to generate its move by selecting from many possible candidate moves. Typically, the computer will generate the first candidate move and store it (along with a "score" indicating its "goodness") in some kind of holding register. It then compares successive new candidates, as they are generated (serially), with the move currently being held. If the new candidate's score is better, he replaces the move currently in the register; if it's worse, the new candidate is simply discarded. But what if the two scores are equal? Then it really doesn't matter which candidate is selected, since one is just as good as the other. So, what usually happens is that the new candidate is discarded, since nothing is gained by replacing the one already being held. This means that the computer will always end up selecting the first of all the best candidates it encounters; it will suffer from invariance. How can we correct this problem?

Obviously, sometimes we would like to replace the incumbent candidate with the equivalent new one, and sometimes we would not. But we have to make sure that each candidate has an equal chance of being selected as the returned move. We cannot, therefore, simply flip a coin to see which candidate is chosen; this would always give the last candidate the best chance (50-50), and the first candidate the worst chance. (The first one would have to win every flip of the coin in order to survive.)

If we know in advance how many candidates to expect, then the solution is easy. If there are N candidates to choose from, we

simply pick a random number r between 1 and N. Then, when the r^{th} guy shows up, we grab him. Unfortunately, we almost never know in advance exactly how many to expect. And it's not always practical to store all the candidates until the end, and then randomly select one.

Let me restate our problem in slightly different terms: Suppose we work in an employment agency, and we are assigned the task of selecting one person to be hired for a particular job. Assume that this particular job has absolutely no prerequisites, so every person who applies is equally qualified. Furthermore, we have no personal preferences regarding any of the applicants. The only requirement for us is that every applicant must have an equal opportunity of being selected. The applicants are lined up outside our office door and, since the room has no windows, we do not know how long the line is. Our office is very small and can hold no more than two applicants at a time. Once we dismiss an applicant, he must leave the room and never return. Our problem is to find a procedure for randomly selecting one candidate from the line.

When I first posed this problem to several of my friends, their initial intuitive response was that it's impossible to give everyone in the line an equal chance if we don't know in advance how many applicants to expect. But, surprisingly enough, there is a solution, and it's really quite simple. Here's what we do: We call the first applicant into the room, and we flip a "one-sided" coin (a Mobius coin?) with one head. If the coin comes up heads (which it must), we let the first applicant stay in the room. Now we bring in the second applicant. This time we flip an ordinary "two-sided" coin, with one head and one tail. If the coin comes up heads, the second applicant stays in the room, and the first is dismissed; otherwise, the first stays, and the second must leave. Next we call in the third candidate and flip a "three-sided" coin. If it comes up heads, he gets to stay; otherwise, he leaves, and the incumbent remains.

We keep repeating this process of flipping an "N-sided" coin for the N^{th} candidate and selecting him to replace the incumbent if the coin comes up heads. When the line runs out, whichever candidate is currently in our office gets the job. This procedure guarantees that each person in line will have had exactly the same chance of being selected.

It's easy to show that everyone actually does have the same chance, no matter where he is in the line. Suppose we consider the j^{th} applicant's chance of ending up with the job. When Mr. J first gets called into the office, his flip of the j-sided coin must come up heads, or he's all through. The probability of a head coming up is $1/j$; the probability of a tail is $(j-1)/j$. If he is ultimately destined to get the job, then all the remaining applicants' coins must come up tails. (The last person who gets heads gets the job.) Thus, the probability that our Mr. "J" will be hired is simply the product of the individual probabilities of his getting a head, with

```
>RUN

        X IN SQUARE?223

        O IN SQUARE 232

- - - -   - - - -   - - - -   - - - -
- - - -   - X - -   - - - -   - - - -
- - - -   - - O -   - - - -   - - - -
- - - -   - - - -   - - - -   - - - -

        X IN SQUARE?441

        O IN SQUARE 333

- - - -   - - - -   - - - -   - - - -
- - - -   - X - -   - - O -   - - - -
- - - -   - - O -   - - - -   - - - -
- - - -   - - - -   - - - -   - - - X

        X IN SQUARE?332

        O IN SQUARE 114

O - - -   - - - -   - - - -   - - - -
- - - -   - X - -   - - O -   - - - -
- - - -   - - O -   - - X -   - - - -
- - - -   - - - -   - - - -   - - - X
```

Fig. 2. Partial sample run of program.

```
>LIST
10000 L=768
10100 FOR K=0 TO 63
10200 POKE L+K,K
10300 NEXT K
10400 L=L+64
11000 A=4:B=16
11100 FOR S=1 TO 4
11200 GOSUB 19000
11300 NEXT S
12000 A=16:B=1
12100 FOR S=1 TO 13 STEP 4
12200 GOSUB 19000
12300 NEXT S
13000 S=1:A=5:B=16:  GOSUB 19000
13100 S=13:A=-3:B=16:  GOSUB 19000

13200 S=1:A=20:B=1:  GOSUB 19000
13300 S=49:A=-12:B=1:  GOSUB 19000

13400 S=1:A=17:B=4:  GOSUB 19000
13500 S=49:A=-15:B=4:  GOSUB 19000

14000 S=1:D=21:  GOSUB 18000
14100 S=16:D=11:  GOSUB 18000
14200 S=4:D=19:  GOSUB 18000
14300 S=13:D=13:  GOSUB 18000
15000 END
18000 FOR K=S TO S+3*D STEP D
18100 POKE L,K-1:L=L+1
18200 NEXT K
18300 RETURN
19000 FOR J=S TO S+3*B STEP B
19100 FOR K=J TO J+3*A STEP A
19200 POKE L,K-1:L=L+1
19300 NEXT K
19400 NEXT J
19500 RETURN
```

Program A. Initialization routine.

everyone else after him getting tails. If the line is N applicants long, then this probability is:

p = (1/j)[j/(j+1)] . . . [(N-1)/N]

which is just 1/N. Since j was arbitrary, we see that each candidate has exactly one chance in N of getting the job.

Fig. 1 shows a flowchart of the complete random selection algorithm.

Apple QUBIC

A random selection algorithm, similar to the one described in the previous section, is incorporated into the QUBIC program presented in this article. Listings are shown in Programs A and B. The program is written in Apple BASIC and runs on an 8K Apple-1 computer. It will also run on an 8K Apple-II with very few changes. Apple BASIC, which is an integer-only BASIC, is ideally suited for programs like QUBIC in that it's fast (no time-consuming floating point operations), and its random number generator acts exactly like an N-sided coin. (You specify N, and it generates a pseudorandom integer from 0 to N-1.)

Because of memory limitations on my Apple-I, the QUBIC program is really two programs. The first part, statements 10000 to 19500 (Program A), serves to initialize a set of lookup tables and must be run once prior to the first use of the second part (Program B), the actual game. After this initialization program has been run, it can be deleted, if necessary, to make room for the second part. (This deletion is not necessary on Apple-II systems; they have enough room to hold both parts of the program at the same time.) The lookup tables start at decimal location 768 and extend to decimal location 1071; this location is determined by the variable L in statements 10 and 10000.

In addition to the lookup tables, the program uses decimal locations 564 to 767 for temporary storage. Since Apple-II uses all this area for its display buffer, it will be necessary for Apple-II owners to change line 10. I would suggest that you merely add some large offset, like 2000, to all the values in the line. Then statement 10 should look like:

10 Q=2546:G=2628: S=2692: L=2768

(Don't forget to also change the L in statement 10000 to read: L=2768.)

The only other precaution required of Apple-II users is that you set LOMEM to no less than about 4096, or you might destroy the lookup tables. (When you save the program on tape, don't forget to save the tables, too, or you'll have to regenerate them each time you load the program.)

Playing The Game

In my version of the program, you always play X and the computer always plays O. The program will ask for your move by displaying:

X IN SQUARE?

You respond with a three-digit number with each digit in the range from 1 to 4. The first digit indicates the level of the square (level 1 is displayed on the left, 4 on the right), the second digit indicates the column in that level (again numbered from left to right), and the third digit indicates the row (from bottom to top). Thus, the move 324 would indicate 3rd level, 2nd column from the left, 4th row from the bottom. If you make an illegal move, the computer will ask for your move again.

Each time the computer returns its move (about 20-25 seconds), it will produce an updated display of the game cube. A partial game is shown in Fig. 2. ■

Program B. Source listing for QUBIC game.

```
>LIST
    5 DIM E(7)
    7 E(1)=254: E(2)=18: E(3)=2: E(
      4)=1: E(5)=2: E(6)=66: E(7)=255

   10 Q=564: G=628: S=692: L=768
   20 FOR K=G TO G+63: POKE K,128
      : NEXT K
   30 FOR K=S TO S+75: POKE K,128
      : NEXT K
  100 PRINT : TAB 13: INPUT "X IN SQU
      ARE",X
  110 P=X/100: IF P<1 OR P>4 THEN
      100
  120 X=X-100*P: C=X/10: IF C<1 OR
      C>4 THEN 100
  130 R=X-10*C: IF R<1 OR R>4 THEN
      100
  140 X=16*(P-1)+4*(R-1)+C-1
  150 IF PEEK (G+X)#128 THEN 100

  160 M=-1: GOSUB 1000
  170 GOSUB 2000
  180 IF W THEN 850
  190 IF T THEN 820
  200 GOSUB 3000
  210 M=1: GOSUB 1000
  220 GOSUB 2000
  230 IF W THEN 900
  250 GOSUB 7000
  300 IF T THEN 820
  350 GOSUB 9000
  400 GOTO 100
  800 GOSUB 7000: GOSUB 9000
  810 GOTO 100
  820 PRINT : TAB 13
  830 PRINT "--- TIE GAME ---"
  840 GOTO 950
  850 TAB 13: PRINT "--- YOU WON ---"

  860 GOTO 950
  900 GOSUB 7000: TAB 13
  910 PRINT "---- I WON ----"
  950 GOSUB 9000: PRINT : PRINT

  960 TAB 11: PRINT "THANKS FOR THE G
      AME"
  970 PRINT : PRINT : PRINT : PRINT
      : PRINT
  980 END
 1000 POKE G+X,128+M
 1010 FOR K=L TO L+303: IF PEEK
      (K)#X THEN 1090
 1020 Y=S+(K-L)/4: V= PEEK (Y): IF
      V=0 THEN 1090
 1030 V=V-128
 1035 IF V=0 THEN 1060
 1040 IF SGN (V)= SGN (M) THEN 1060
```

```
1050 V=0: GOTO 1070
1060 V=V+M+128
1070 POKE V,V
1090 NEXT K: RETURN
2000 W=0:T=1
2010 FOR K=S TO S+75
2020 V= PEEK (K)
2030 IF V THEN T=0
2040 IF ABS (V-128)=4 THEN W=1
2050 NEXT K: RETURN
3000 FOR K=Q TO Q+63
3010 POKE K,0
3020 NEXT K
3100 FOR K=S TO S+75
3110 N= PEEK (K)-128: IF N=-128
     THEN 3500
3200 Z=E(N+4)
3300 F=L+4*(K-S)
3310 FOR J=F TO F+3
3320 X= PEEK (J): IF PEEK (G+X)
     #128 THEN 3400
3330 V= PEEK (Q+X)
3340 IF V>=254 THEN 3400
3350 V=V+Z: IF Z>=254 THEN V=Z
3380 IF V>255 THEN V=255
3390 POKE Q+X,V
3400 NEXT J
3500 NEXT K
3600 V9=0
3610 FOR K=0 TO 63
3620 V= PEEK (Q+K)
3630 IF V>64 AND V<128 THEN V=V-
     64
3640 IF V>16 AND V<32 THEN V=V-
     16
3650 IF V>V9 THEN V9=V
3680 POKE Q+K,V
3690 NEXT K
3700 IF V9<32 THEN 4000
3800 X=0
3810 IF PEEK (Q+X)=V9 THEN RETURN

3820 X=X+1: GOTO 3810
4000 P4=16
4010 FOR K=L TO L+287 STEP 16
4020 P=0
4030 FOR J=K TO K+15
4040 P=P+ PEEK ( PEEK (J)+G)-128

4050 NEXT J
4060 IF P>P4 THEN 4500
4070 IF P=P4 THEN 4210
4200 P4=P:V4=0:N4=0
4210 FOR J=K TO K+15
4220 X1= PEEK (J)
4230 V= PEEK (Q+X1)
4235 IF V=0 THEN 4400
4240 IF V<V4 THEN 4400
4250 IF V>V4 THEN 4350
4260 N4=N4+1
4270 IF RND (N4) THEN 4400
4280 GOTO 4360
4350 V4=V:N4=1
4360 X=X1
4400 NEXT J
4500 NEXT K
4550 IF V4 THEN RETURN
4600 GOTO 3900
7000 P=X/16+1
7010 X=X-16*(P-1)
7020 R=X/4+1
7030 C=(X MOD 4)+1
7040 TAB 13: PRINT "O IN SQUARE "
     ;P;C;R
7050 RETURN
9000 PRINT
9010 FOR R=4 TO 1 STEP -1
9020 FOR P=1 TO 4
9030 FOR C=1 TO 4
9040 X=16*(P-1)+4*(R-1)+C-1
9050 V= PEEK (Q+X)
9060 IF V=127 THEN PRINT " X";
9070 IF V=129 THEN PRINT " -";
9080 IF V=129 THEN PRINT " O";
9090 NEXT C: PRINT "  ";
9100 NEXT P: PRINT
9110 NEXT R
9120 RETURN
```

Jeff Duntemann WB9MQY
6424 North Albany Avenue
Chicago IL 60645

Put An ELF In Your Keyer

—sneaky computer strikes again

I know that there are plenty of you who don't believe that computers belong in ham shacks. Perhaps that's because the last time you saw a computer was when you toured the university as a Boy Scout and saw this thing that filled two buildings and made a lot of noise. I'm sure that you have neither two buildings nor a hundred million dollars to spare, but times have changed. Today, computers can save you time and money.

A computer is actually an infinitely programmable switch. It can do almost anything. On your bench you might have a signal generator, frequency counter, RTTY box, and Morse keyer. They're worth a bundle. On the other hand, you could have a single box that does all of that and more. It's the instructions you feed it that make the difference. Your entire test bench could fit in a shoebox – rolled up on Teletype punched tape.

If you have a computer based on the RCA CDP1802 microprocessor (the COSMAC ELF* is the best example), you can start by making a keyer in 34 instruction statements.

The hardware setup is simple. (See Fig. 1.) Parallel all six sections of a CMOS 4050 hex driver. This provides the current needed for the reed relay. The 1N4001 shorts out inductive spikes, which might damage the CMOS logic. Connect the dit side of your paddle directly to EF4 and the dah side to EF3. The center contact is grounded. That's all there is to it.

The program is a good example of several timing loops nested one inside the other. The program sets up a basic timing delay loop of fixed length. (See Fig. 2.) This delay is a very small fraction of a second long. The computer goes through this loop a number of times to generate a dit interval. The number of times this loop occurs is given by the number you set in the toggle switches. The higher the number in the toggles, the more times the computer makes this loop, and the slower your keyer will be.

When you select a dah, the computer executes a third loop on top of the ones described above. This loop makes the computer go through the sequence generating a dit three times. Your dahs are thus three times as long as your dits, regardless of what code speed you select. The interval between dits and dahs is one dit long.

The program works best with a clock frequency of between one and two MHz. You can select any of 256 code speeds, and change speed any time by flicking the toggles. The speed ranges from dits that are several

*Registered trademark of RCA Corporation.

MA	Mach. Code	
00	36	Test for dah.
01	09	
02	3F	Test for dit.
03	00	
04	F8	Set no. of loops
05	01	for dit in
06	A7	R7.
07	30	Go to M(0C).
08	0C	
09	F8	Set no. of loops
0A	03	for dah in
0B	A7	R7.
0C	7B	Turn Q on.
0D	6C	Read number from toggles.
0E	A6	Put number in R6.
0F	F8	Set no. of loops
10	FF	for time delay
11	A5	in R5.
12	25	Subtract 1 from R5.
13	85	Put R5 in accumulator.
14	3A	If R5 is not 0,
15	12	go to M(12) and loop again.
16	26	Subtract 1 from R6.
17	86	Put R6 in accumulator.
18	3A	If R6 is not 0,
19	0F	go to M(0F) and loop again.
1A	39	If Q is off,
1B	00	go to start, else continue.
1C	27	Subtract 1 from R7.
1D	87	Put R7 in accumulator.
1E	3A	If R7 is not 0,
1F	0D	go to M(0D) and loop again.
20	7A	Turn Q off.
21	30	Go to M(0D).
22	0D	

Program A. ELF keyer routine.

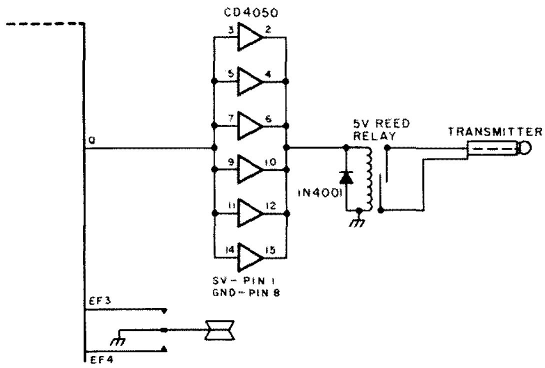

Fig. 1. ELF keyer schematic diagram.

seconds long (by toggling in hex FF) to Morse characters in the low audio range (by toggling in 00).

If your clock frequency is less than 500 kHz, change the delay constant at M(10) to hexadecimal 80. Otherwise, your code speed might never rise above Novice level.

If this program won't run in your 1802 computer, check which N line gates the toggle switch number onto the data bus. The 6C instruction at M(0D) uses the N2 line to do this. If your computer uses a different N line, the number you set in the toggle switches isn't making it into the program. Replace the 6C instruction with the one which corresponds to the N line you're using.

Perhaps you've always looked the other way when the page said "microprocessor." Now's the time to take another look. A good scrounger can make a minimal 1802 computer for under seventy dollars. If it does nothing else, it will teach you a lot about a major new area of electronics, and it makes a dynamite keyer as well. But when was the last time a computer was ever used for just one thing in a ham shack?

I don't think it's happened yet. ■

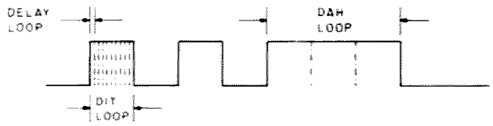

Fig. 2. Timing diagram.

References

[1]"Build the COSMAC ELF," *Popular Electronics* (Part 1, August, 1976; Part 2, September, 1976; Part 3, March, 1977), Joseph Weisbecker.

[2]The COSMAC Exogenous Users Group can be joined by writing to Edwin M. Robertson, Jr. WA4MXA, 1535 Hermitage Ct., Durham NC 27707.

LETTERS

from page 51

person of limited electronics skill, after using your *Advanced Class Study Guide*, I was able to "skate" and thoroughly master the Advanced class test, and now am a proud holder of an Advanced class license.

In that strange and unknown tongue, otherwise known as "plain English," you have truly presented an incredible book. The material is precise, thoroughly explained, and contains no extraneous material. I would recommend it to anyone who desires an Advanced class license.

If you ever need an endorsement, I'll do it for free. God bless you.

Charles E. Martin WA4YRA/DA1NR
APO NY

WHAT'S GOING ON?

Just thought I'd drop you a note and ask what's going on up there in the woods. I have really been enjoying *73* for the year and a half I've been a subscriber. Each month's issue seemed to be an improvement over its predecessor — more articles, more editorials, more news, more everything! The last few issues, however, have been disappointing. What happened to the guest editorials? And how about your "Briefs" column? These had quickly become two of my favorite sections in *73*. Now they are missing.

Other changes for the worse were noted, too. The worst of all was the "special issue" idea. The intention was grand, and with this I sympathize. But it crippled the magazine's strongest leg — that of having something (if not a helluva lot) for everyone. Face it. Aside from a few special cases that come up from time to time, the only acceptable subjects for special issues are those with true mass appeal. The only two subjects I feel fit this mold are FM/repeaters and antennas.

I'm not giving up on *73* just yet, though. You've come through before and I trust you still shall. Well, 'nuff said for now. Just tweak those few editorial circuits to eliminate those spurs and everything will again be hunky-dory down here in Virginia!

I just loved Ken Wilson's piece, "Electronics Study Guide," in the November issue. Have filled out the reader's service card noting his as best article!

Steve Silsby WA4BRL
Newport News VA

Nobody said they liked the guest editorials and briefs, so I killed them. Special issues are popular, but perhaps RTTY is too special. — Wayne.

OFF OUR DUFFS

I hope you are doing fine today. It's been about ten years since I've read a *73 Magazine*, as where I've lived the past ten years, it's hard to find any ham magazines. Now I'm getting back into hamming. After reading your editorial, "Never Say Die," you really have me scared, as I'm an HF op and I love the skip bands. I'm on 40 meters most of the time. Let us hope we never lose any more spaces on the HF bands.

I appreciate all you have done for ham radio. When I got my ticket back in 1968 after a 6 year QRT, I was against the incentive jazz proposed by the ARRL. When I got my General class, it was for all frequencies in all bands; a year later I lost some frequencies to the Fxtra and Advanced classes. I'm still a General. In 1978, I will finally start to study for the Advanced so I can get some more portions of the phone bands. I was against incentive licensing and still am. For I believe it is a hobby; I'm not trying to be an engineer.

After my belly-aching, I wish to say or rather suggest that you work on an idea of mine. My suggestion is that we start a fund to finance ham ambassadors or whatever it takes for us to keep our bands intact. I am ready, willing, and able to send in a ten-spot once in awhile. I'm willing to put money where my mouth is. Wayne, think of some way where all us hams can help, even by sending in just a buck or two. We must get off our duffs and get into action. Thanks for scaring me or rather waking me up.

Albert J. Sweney WA6DBE
FPO San Francisco

If I knew where to send money to do good, I'd be first in line. — Wayne.

BY FAR THE BEST?

73 Magazine is by far the best ham publication I have ever read — even a non-ham could take an interest in it. I found this out at work, when a fireman who is interested in public service VHF saw me reading a copy. I offered to loan it to him. At first he said that he didn't like those ham magazines, but then he spotted an article on a modified Wilson and noticed that *73* was different from those other ham magazines he had seen. Well, to end a long story, he borrowed that issue for the rest of the week, and insisted that I bring in all the other issues that I have. As soon as he gets his house built and running fairly smooth, we will have another person learning the code for his Novice ticket, all because of the many interesting articles presented in *73*.

David J. Johnstone WB1COB
Torrington CT

THE SLEP "GOOD OLD DAYS"

After many years as an amateur, and one who was able to afford buying and trading many thousands of dollars worth of equipment, I have become very disillusioned with the attitude of most dealers. Once they ring up a sale, they feel no responsibility to their customers and God help you if the gear is defective when delivered!

Fate recently brought me in contact with one of your advertisers who is just the opposite. He makes good deals, keeps his word regarding prompt delivery, and, miracle of miracles, stands behind his sale.

The name of this oasis within a desert is Slep Electronics. I advise anyone to try Bill first on your next purchase and get the feel of "the good old days."

George W. Moran W2DGZ
Port Jefferson NY

$25,000 FOR AMSAT

Many thanks for resuming the publication of our AMSAT Phase III "ad" in *73 Magazine*. Realizing that *73 Magazine* space is at a premium, we really appreciate your continuing to run our ad on a space-available basis. The response has been excellent and has brought in over $25,000 in donations in the past six months.

Perry I. Klein W3PK
President, AMSAT
Washington DC

ANCHOR LINE CUT?

I thought you might be interested in knowing about a communication piracy network that has developed in the Bahama and Caribbean Islands. It has to do with the increasing number of U.S. citizens using foreign amateur licenses illegally aboard their pleasure yachts.

As you know, the number of yachts coming to the Virgin Islands is increasing each year. Until recently, the number of illegal maritime stations has been minimal. However, within the last 15 months, it has grown from maybe 4 or 5 to something over 20. In this small area, even 10 is an alarming number and enough to warrant action by foreign governments as well as our own.

The main contributor to this situation is an American with an

Continued on page 101

Try HCAI

—ham computer assisted instruction

Ed Hughot
Denis Nechuta
437-A Aldo Ave.
Santa Clara CA 95050

Since the advent of the affordable computer, many interesting applications have appeared. We have seen the computer used to solve engineering equations, to edit text, to handle the "mail," and even to play games.

One area that seems to be neglected is Computer Assisted Instruction (CAI). Yes,

```
LIST


1 REM== RESISTOR COLOR CODE PROGRAM ==
2 REM      DENIS NECHUTA
3 REM      ED HUGHOT
4 REM      2/24/77
10 DIM C$(10)
20 DATA BLACK,BROWN,RED,ORANGE,YELLOW,GREEN,BLUE,VIOLET,GRAY,WHITE
40 K=10
45 PRINT:PRINT
50 PRINT "*** RESISTOR COLOR CODE PRACTICE ***":PRINT
60 PRINT "I WILL GIVE YOU THE FIRST THREE COLOR BANDS"
70 PRINT "OF A RESISTOR.  YOU TELL ME THE VALUE IN OHMS"
75 PRINT "YOU WILL HAVE" K "RESISTORS"
80 PRINT:PRINT
90 FOR I=0 TO 9:READ C$(I):NEXT I
100 PRINT "I'M THINKING OF A RESISTOR  THE COLOR BANDS ARE"
110 T=0
120 FOR I=1 TO K
125 PRINT
130 V1=INT(9*RND(1)+.5)
140 V2 =INT(9*RND(1)+.5)
150 V3=INT(5*RND(1)+.5)
160 V=(V1*10+V2)*10↑V3
165 V=INT(V)
167 IF V=0 THEN 130
170 PRINT I".  " C$(V1) " " C$(V2) " " C$(V3)
180 INPUT"WHAT IS THE VALUE";X
190 X=INT(X)
200 T=T+1
210 IF X=V THEN 240
220 PRINT"WRONG.";
225 INPUT " WHAT IS THE VALUE"; X
230 GOTO 200
240 PRINT"CORRECT"
250 NEXT I
255 PRINT:PRINT
260 PRINT "YOU MADE" T "ATTEMPTS ON THE" K "RESISTORS I GAVE YOU"
265 PRINT
270 PRINT "YOU ARE ";
275 IF T=K GOTO 300
280 IF T>2*K THEN 340
285 S=INT((T-K)/2) + 1
290 ON S  GOTO 310,310,320,330,340
295 GOTO 340
300 PRINT"FANTASTIC": GOTO 345
310 PRINT"AN EXPERT": GOTO 345
320 PRINT"A PROFESSIONAL": GOTO 345
330 PRINT"A NOVICE": GOTO 345
340 PRINT"KIDDING ME !!"
345 PRINT:PRINT
350 INPUT"TRY AGAIN";A$
355 PRINT:PRINT
360 IF LEFT$(A$,1)="Y" THEN 100
370 PRINT "GOOD BYE, IT WAS FUN"
999 END
OK
```

Fig. 1. Color code quiz.

```
RUN

*** RESISTOR COLOR CODE PRACTICE ***

I WILL GIVE YOU THE FIRST THREE COLOR BANDS
OF A RESISTOR.  YOU TELL ME THE VALUE IN OHMS
YOU WILL HAVE 10 RESISTORS


I'M THINKING OF A RESISTOR  THE COLOR BANDS ARE

 1 .  BLUE GREEN ORANGE
WHAT IS THE VALUE? 65000
CORRECT

 2 .  BLUE GRAY RED
WHAT IS THE VALUE? 6800
CORRECT

 3 .  GREEN VIOLET ORANGE
WHAT IS THE VALUE? 57000
CORRECT

 4 .  ORANGE GRAY YELLOW
WHAT IS THE VALUE? 390000
WRONG. WHAT IS THE VALUE? 380000
CORRECT

 5 .  VIOLET BROWN ORANGE
WHAT IS THE VALUE? 71E3
CORRECT

 6 .  ORANGE RED RED
WHAT IS THE VALUE? 3200
CORRECT

 7 .  GRAY ORANGE BROWN
WHAT IS THE VALUE? 830
CORRECT

 8 .  YELLOW RED YELLOW
WHAT IS THE VALUE? 42000
WRONG. WHAT IS THE VALUE? 42E4
CORRECT

 9 .  YELLOW WHITE YELLOW
WHAT IS THE VALUE? 490000
CORRECT

 10 .  ORANGE RED RED
WHAT IS THE VALUE? 3200
CORRECT


YOU MADE 12 ATTEMPTS ON THE 10 RESISTORS I GAVE YOU

YOU ARE AN EXPERT


TRY AGAIN? NO


GOOD BYE, IT WAS FUN
```

Fig. 2.

your friendly home brew computer can also be your best buddy when it comes to learning electronics theory. The procedure is quite simple if you program in BASIC. You simply invert the routine for solving an equation. The program asks you questions about the equation and then scores your results.

If you write the program yourself, you win three ways. First, you learn a lot about the equation by programming it. Second, you can drill yourself until the principles are firmly in mind. Third, you learn more about programming at the same time.

When you try CAI, whether you write your own program or not, you will quickly realize the benefits. One of the main advantages is the instant feedback. Unlike the examinations at school, as soon as you answer the question you are told if it's right — no waiting days or weeks. You don't have time to forget why you thought you were selecting the right answer. Another big plus is that you take the test when you feel like it. Just you and your personal computer are all it takes. And the computer adds up your score, so it's very easy to see how well you are really doing.

One example of CAI is a very simple application. At some time or other we have all had to learn the color codes. Fig. 1 is a listing of a program that will help you learn the color codes. Fig. 2 is a printout of a typical run. Note that this program is written so that you feel you are actually conversing with the instructor. It is almost like a game.

Try this program, and see if you agree that it is a lot easier to learn the color codes with the help of a computer. ■

B. S. Field, Jr. W8JJO
16725 Fenmore Ave.
Detroit MI 48235

Raid!

—the radio police strike

The minute that we got back from Toulouse, while we were still taking our bags out of the car, the neighbor's kids came running over to the kitchen door. They were usually shy about talking to "The Foreigners," so their enthusiasm gave both my wife and I the impression that their message was "Something Important." So, after I got the bags out of the car and up the stairs, I left my wife to finish the unpacking and went with the kids over to my neighbor's place of business, his repair garage.

M. Guy was deep in the bowels of one of his client's tractors when I came in, but he pulled his hands out of the transmission and wiped them off on a rag in order to talk to me. In that part of France, especially when talking to foreigners, it is important to have both hands free.

It seems that the Radio Police had been calling on M. Guy. He chose his words carefully, making sure that he was using his French vocabulary. His eyes were large and round. The Radio Police, he told me, had been by his garage three times recently to ask him questions about me and my dipole, interrupting his work. "Flics!" snapped M. Guy. "Cops!" He had a friend, who had a friend in the prefecture, the French government's local administrative center, in Cahors, the chief city of the department, and M. Guy had complained through those channels after the third visit of the "flics." The friend's friend had assured him that these interruptions of his work would stop, and they had.

But then today, the "flics" had phoned M. Guy that they were coming back! His voice rasped bitterly, not only with the exasperation at that further interruption of his work, but also at the shame of admitting that his connections to the prefecture had not kept them out of his hair after all. He twisted the greasy rag on which he had been wiping his hands, then slapped it down on the nearby tractor tire. They had phoned to know when I would be at home. They would come in and look at my radio, they had said. M. Guy had known that we were expecting to return from Toulouse before noon, but he had told them not to come until three. He had wanted to give me time, he said, to be warned and to take measures, just in case I needed to.

I laughed and told him to relax, that I would be glad to have the Radio Police look at my station, and that seemed to reassure him. He had never been too sure how legal my radio station might be. However, over the months he had adopted us as true neighbors and therefore as partisans with him in every French country person's eternal guerrilla war with those malicious city slickers from Paris, that source of liquor regulations and tax collections. He grumbled on, lapsing into patois, about the interferences of all these officious snoops, interrupting an honest man's effort to make a simple living, etc., etc. He turned back to the disembowelled tractor and got to work again.

I went back home and told my wife about it. She wanted to know what the Radio Police would find wrong, and I told her that as far as I knew, there was nothing wrong to find. I had an FT-101B, a license still good for the rest of the year, and a home brew multiband dipole. I usually worked the locals on 80 meters in my halting French, and a little DX on 15 meters when it opened to the States.

At three that afternoon, exactly on schedule, a Peugeot sedan drove up the track from the road to our house and parked next to my car by the kitchen door. A gentleman in a black business suit got out, followed by the driver, a tall blonde man in a tan trench coat, and then by a red-headed woman in a light blue trench coat. They all had that smooth, buffed surface of plainclothes police everywhere in the world. The man in the black suit, short, as short as I am, came toward me as I stood in the kitchen door, while the other two stood by the car, hands in their coat pockets. The smaller, older man stuck out his hand.

"FØBHN?" he said, pronouncing the letters English style. "C'est moi," I said, and, continuing in French, invited him in, calling the same to the other two. The black suit nodded at me, turned to the other two and nodded to them. Then they took their hands out of their coat pockets, smiling now, and came up the steps to the kitchen door, and all three came inside.

The house that we were renting then had been converted from a seventeenth-century barn built along the slope of a hill. It looks unremarkable from the outside, but inside it is a bit spectacular. The kitchen, for in-

stance, has a seventeen-foot ceiling and is dominated by a twenty-foot-long table down the middle, from which my wife was rising as they came in the door. We had both been working there, and the table was covered with her books and papers, and my papers and typewriter. Only the small space at one end where we normally ate was cleared. The three officials were visibly impressed.

I tried to introduce them all to my wife, but I never got their names straight. The confusion was compounded by the insistence of the man in black that he talk English and by my insistence that I talk French. My wife smoothed things over somewhat by offering coffee, cookies, and seats to all. Meanwhile, all three of the visitors were trying at once, two in French and one in English, to explain to us who they were and why they had come, while at the same time I was telling them in my version of French that I already knew that they were the Radio Police. Finally we all ran down, more from frustration than out of any conviction that we had made ourselves understood. The two in trench coats looked nervous and stunned. My wife, a professional writer and educator like myself, and normally a self-contained person, began to see the situation as ridiculous, one of communication overkill, and in order to keep from giggling, she began to join in the act, playing the role of the gabby housewife, until at last she was the only one left talking. I gaped.

The older man in black, as I later deciphered it, was not from the Radio Police – apparently there is no such organization in the French administration – but an inspector in the radio division of the postal and telecommunication ministry of the French government. After some urging on my part, I got him to come upstairs, through the living room, and up more stairs to the bedroom, where I had set up my rig on a table in front of a window. The white coax to the antenna ran up into the ceiling beside a radiator pipe. I turned the rig on and let him play with the knobs. Then we talked radio chitchat for awhile. He was a ham himself. He assured me again, as he had several times down in the kitchen, that this was an amicable inspection, no question of any complaints about TVI, all merely routine. We listened around on 15 meters, but the band was dead, so we switched to 80 and listened to the goulash of polyglot QSOs up and down the band in French, Spanish, Italian, German, English, Dutch, etc. He told me that his "accompanying friends" would like to see my rig, too, and he went down to the kitchen to call one of them to come and to look.

First the red-headed worman in the blue trench coat came up and looked blankly at the rig. She said that she didn't understand these technical matters and went back down to the kitchen. My wife later remarked that they had seemed rather careful never to leave either of us alone. The tall blonde man in the tan trench coat came up next. Evidently, he was glad to get away. My wife had been gabbing away as fast as she could, telling them everything about us, and in exhaustive detail, a tactic that the French call "drowning the fish."

Upstairs, the tan trench coat listened to my rig. The postal inspector in the black suit kept trying to get me to talk English, so when my French vocabulary failed me on some technical terms, I changed to English. I also switched the rig over to twenty meters, to show off some DX QSOs. I asked the tan trench coat what he thought of those, fishing for some expression of amazement that we hams always love to hear about the marvels of radio and DX. But the tan trench coat merely shrugged and said that he didn't understand English. The inspector in black translated some of my English sentences for him – until the tan trench coat, apparently without thinking, corrected him, supplying a more accurate French translation of what I had said than the inspector had!

As it turned out, there was no problem with my rig or my license, at least none that I ever heard about, but at that moment, the evidence that the one in the tan trench coat was dissembling about his English made me a little nervous. However, the sensation passed as we went back down to the kitchen again. My wife was still talking away, and the woman in the blue trench coat was nodding her head with a hypnotized rhythm. My wife served us more coffee, and then I got so self-confident and relaxed that I got into an argument with the inspector about antennas, front-to-back ratios, and impedance matching, a debate of such baroque complexity that soon my wife fell silent and gaped at me.

My neighbor, M. Guy, suddenly appeared at the kitchen door. He was still in his overalls, but his hands were cleaned of grease. My wife invited him in for coffee, and he sat down amid us all, looking around suspiciously as if he thought that the police might be trying to steal the silver. He later told me that he had given them thirty minutes to make a routine inquiry, and when that much time had gone by and they still had not left, he had come over to see if something was wrong. His bright button eyes flashed at everyone, and then he turned and settled down with his elbows on the table, to stare deliberately first at the inspector and then at the man in the tan trench coat.

Eventually the visitors began to make those usual departure noises. We said goodbye at the table, in the doorway, on the back steps, and while the three stood beside the car. The woman in the blue trench coat sat in back, the men up front, with the tan trench coat driving again. The men waved as they drove down the track to the main road, but the woman in back simply leaned her cheek against the side window as if to cool it. I had the sudden intuition that not only had she been wearied by my wife's drowning of the fish, but that she was anticipating the exhausting chore of writing it all down in a report.

After they had left, I explained to M. Guy that the inspector had come merely on a routine and amicable inspection.

"Don't believe it!" snorted M. Guy. I explained that the inspector had brought along the other two, the two trench coats, merely because they had been going his way and had offered him a lift.

"Don't believe it!" snorted M. Guy again. Then he explained that the plainclothesmen had been from the "PJ", the judicial police. In France, no official can enter a home uninvited – unless he's an agent of the *Police Judiciaire.* But an agent of the PJ needs no warrant.

"And the woman?" asked my wife.

M. Guy had no explanation of the woman; he shrugged his Gallic shrug, the corners of the mouth down, the eyebrows and the shoulders up.

It turned out that she was a plainclothes police officer too, or so we heard later. My wife and I considered this inspection as an adventure, that is, as a story to be retold to our French friends over dinners or in cafes over drinks. One of the friends in Cahors hangs out at the aero club at the airport, partly because he likes their restaurant, but partly too because he is an aviation buff. He explained, after I had told my story of the "Amicable Inspection," that someone

had been spotted taking mysterious telephoto photographs of the airport during the last month, and when later apprehended, was unable to offer any convincing explanation of why he was doing that. He had been carrying a foreigner's passport. So the French police had become immediately suspicious of all the local foreigners, me included, it seemed. From my description of the red-headed woman in a light blue trench coat, my friend at the aero club claimed to recognize an agent of the French police, perhaps of the counterespionage section, one who had been questioning airport employees, especially the technical personnel and electronics technicians, only a week before she appeared at our house for the amicable inspection of my ham station that bored her so.

None of the hams in the area of Cahors to whom we told our story seemed much impressed by it. "After all," said one old gaffer, who had started out hamming as a bootlegger in the early thirties before finally getting a ticket, and who later had run clandestine traffic in '43 and '44 to Britain, "after all, if I operated in your country, your radio inspectors would visit me, n'est-ce pas?" He refilled my wine glass, then refilled his own. "I'm only surprised," he went on, "that ours did not call on you during the first month that you were on the air. It took them three months to get around to you. Surely your inspectors visit your station at least once a year, n'est-ce pas?"

When I told him that in twenty years with a license I had never been inspected, indeed, that I had never seen any FCC official in the flesh except in an FCC examination room or as a speaker at a hamfest, he gave me only a sidelong glance and sipped his wine. He didn't believe me. ■

L. Foord VE3FLE
763 Gladstone Dr.
Woodstock, Ontario
Canada N4S 5T1

See Q, See Q

—getting started

Camp Getchagotcha
July 3rd

Dear Mom & Dad:

Surprise! Remember how you kept bugging me to write while I'm away? Well, after only three days, here I am.

I must confess, my first impression of this place wasn't very good. They've got the usual stuff, like hiking and crafts, plus some good stuff like baseball and swimming. I was thinking, I'm getting a little old for this summer camp business, when something happened to make it really fantastic.

That something fantastic is called ham radio. One of our counselors (his name is Gary) is a ham. You probably think that's a funny term, but it's slang (the acceptable kind of slang, Mom), and it means he's one of those guys who talks on a radio to other guys *all over the world.* No kidding! He lets us listen all the time (when our chores are done) and sometimes even lets us talk on the radio. Last night I had the biggest thrill of all. We stayed up really late (not that late) and talked to some guys in Guam (that's an island out in the Pacific Ocean). The signals were so good, it was armchair copy (that means you could lean back in your chair and hear perfectly). But I was so excited I couldn't lean back.

Now Gary's been giving me the lowdown, and I really think (actually, I *know*) that I would like to become a ham. Before you get all excited and call it a passing fancy, let me tell you all about it. First of all, it's not one of those things you just go out and buy. (Dad, you'll appreciate this.) You have to study really hard, and learn a bunch of things, and write an exam to get a license. And you can't go on the air (that means talk on the radio) until you get a license.

Boy, some of the exciting things you can do! You get to talk to famous people who are hams, like Barry Goldwater (he's a senator), and King Hussein (the king of Jordan), and Arthur Godfrey (you know him, Dad). Of course, the famous people aren't on every night.

You get a great education from building your own gear (that means equipment) and learn all about electricity and stuff. Gary built his rig (that means equipment, too) from an old TV. I was wondering, since you've been talking about a new TV, could I have our old set? You also need an antenna, nothing fancy — Gary says a piece of wire does just fine. Dad, would it be OK with you if I ran a piece of wire from my bedroom across the yard to that big oak tree? (I'll be careful climbing, Mom.)

One of the first things you have to do is learn the Morse code (that's dots and dashes). Morse code is better than talking into a microphone. I'm not sure exactly why, but it has something to do with cuearem (that's more slang that I think means interference). But it's more fun with a microphone.

Here's the way it goes. You push the button and say "See q, See q?" (that's slang for "is anybody listening?"). Usually, another ham will start talking to you, and you tell each other your names and where you are and what equipment you're using and how strong (loud) his signal is. Then you say seventy-three (more slang, it means goodbye) and go and work (that means talk to) another guy.

So how about it?

Your loving son,
Albert

P.S. Something else. You learn a lot of geography and things about other countries, and you learn bits of other languages, so it would really help me in school. And, Dad, if I got really good in electronics, it would help me in choosing a career.

P.P.S. Dad, do you think you could advance me some more allowance so I could buy a cheap receiver to get started? ■

Peter Buyaki K6MWM/5
P.O. Box 807
Pruitt AR 72671

Measure Periods With Your Counter

—a practical addition does it

Necessity first confronted me while I was thinking of a way to measure the frequency of the oscillator for my telescope drive, so that the telescope would always be pointed on a celestial object. It is no problem if one is watching for sunspots; the solar rate is 60.000 Hertz for the little clock motor in the telescope. But the sidereal rate must be 60.164 Hertz, and the lunar rate must be 57.968 Hertz. (Future EME experimenters might keep this in mind.)

Without a period measuring facility, I would have to have a gating time of 1000 seconds, in order to have the desired resolution out to the third digit to the right of the decimal point. Similarly, a piano note is listed as 261.63 Hertz (middle C on the concert scale) and would require 100 seconds of gating to take in the least significant digit on the right. But a piano note will not sustain long enough even for a ten second count, thus precluding any attempt to make a frequency measurement.

Period measurement is simply the measurement of the time required for the completion of one cycle of a given frequency, expressed as $t = 1/f$. Here the numerator is tacitly understood to be one second, and, when 60 Hertz is inserted for f, it will yield .01666 seconds. If the answer is desired in microseconds, merely replace the 1 with 1 million, and the division will yield microseconds, which, for 60 Hertz, gives 16,666 μs. Once the period is indicated on the counter, it would be more familiar, however, if converted back to frequency by the use of the reciprocal of the above formula, which is $f = 1/t$.

The period of a wave is somewhat akin to wavelength. Since radio waves travel with a fixed velocity, a cycle is expressed as so many meters in length instead of microseconds of time.

Altering a counter to measure period, as well as frequency, requires no special technology. In a normal counter the signal is precisely gated for a fixed time and then displayed. Remember, the expression "cycles per second" means exactly that!

Note the comparison of the two simplified block diagrams, Fig. 1 being the normal frequency counter. After it is altered by a switching arrangement, Fig. 2, it is also a period counter. The unknown signal is now controlling the timing circuits.

The unknown signal enters either the first 10:1 or the second 10:1 divider prior to the timer, giving us a choice of a 10-cycle group or a 100-cycle group of the signal, respectively, before the timer activates.

No doubt someone is already thinking, "Why not run the signal direct to the timer, eliminating the previous dividers, thus obtaining timer action on each cycle which is basically one period?"

There are several reasons why I discourage this:

1. There may be noise riding in with the signal, causing the Schmitt trigger to trip slightly earlier or later.
2. The slightly capricious nature of the Schmitt trigger itself, whereby the threshold points may wander slightly.
3. The signal itself may change its voltage within one period, resulting in loss of accuracy, even though the Schmitt trigger may be adhering to a rigid threshold level.

Thus, if there is any slight error incurred between the turn on and turn off interval, it would appear much less significant if averaged in with a 10-cycle group and especially so with a 100-cycle group averaging.

The actual circuit for incorporating a period measurement on a frequency counter is shown in Fig. 3. The period portion is detailed around a frequency counter that was originated by Peter Stark K2OAW.

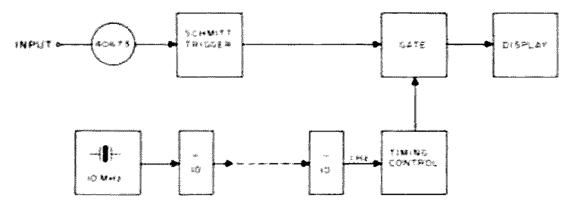

Fig. 1. Simplified block diagram of a frequency counter.

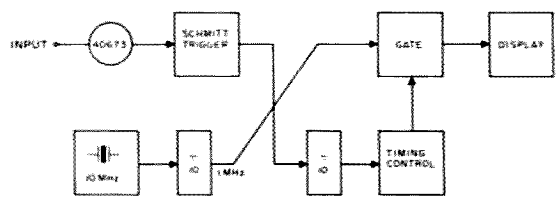

Fig. 2. After switching from frequency to period mode, note the swapping of the unknown signal with the 1 MHz.

Because period measurement was a prime necessity, I had to forego the available printed circuit board and go it alone. I still used some of K2OAW's well thought-out circuits, some of which are included in the schematic to clarify the tie-in of the period function.

The Fig. 3 timing circuit provides only 1 second and 1/10 second signal gating in the frequency mode, which will provide full display with eight display indicators. In the period mode, the gating will be dependent upon either the 10- or the 100-cycle groups.

After studying Figs. 1 and 2, it can be concluded that a DPDT switch would do the trick, and this is true, except for the fact that stray capacitances, etc., may begin to rear their ugly heads.

ICX takes the place of the DPDT switch, which is a 74125 tri-state TTL. To those not familiar with this type of logic chip, it simply means that the third state is a cutoff state, similar to an open circuit appearing on the output when the control on the little triangle is inactivated. This is unlike the output of a NAND gate, which is always either a low or a high, but never such that the outputs of two NAND gates could be paralleled. The outputs of a 74125 can all be paralleled, as long as only one, called a selective gate, is activated at a time.

Assume now that the mode selector switch, S2, is in the μs (microsecond) position and that S3 is momentarily closed, causing a *high* to appear at 8 of ICYc. A low will appear on pin 10 of ICX (because S2 is grounded), enabling the c section of the 74125. The b section will likewise be enabled because a low appears on pin 4 of ICX. The a and d sections of ICX are disabled as a high is sent to pins 1 and 13 from the output of ICYa. There will now be a path from the Schmitt trigger entering pin 5 of ICX and leaving at 6 to enter pin 14 of IC28. The 1 MHz, likewise, has a path via section c of ICX to pin 5 of IC4b.

With the gate length switch, S1, in the upper position (to select timing with the 10-cycle group), a *low* will be imposed on IC31a and b, through a 1N270 diode, causing the counter to measure with the shorter group (ten cycles) and illuminating the first decimal position (between next to the last and the extreme right display indicator).

With S1 in the down position, pins 2, 4, and 5 will go back up to a high, with the assist from the 3.9k pull-up resistor, blocking the path via IC31c, and passing the signal through IC31a, causing the 7476 to cycle on every 100-cycle group. The second decimal point will be selected to indicate the proper microseconds.

If push-button S3 (normally open) is hit momentarily, it will cause ICYc and d to flip as a contact debouncer and will not flip back until a negative-going differentiated pulse is obtained from the 100 pF capacitor. The 1N914 diode is used to sink the positive-going differentiated pulse, as the input should never exceed the power supply voltage. To

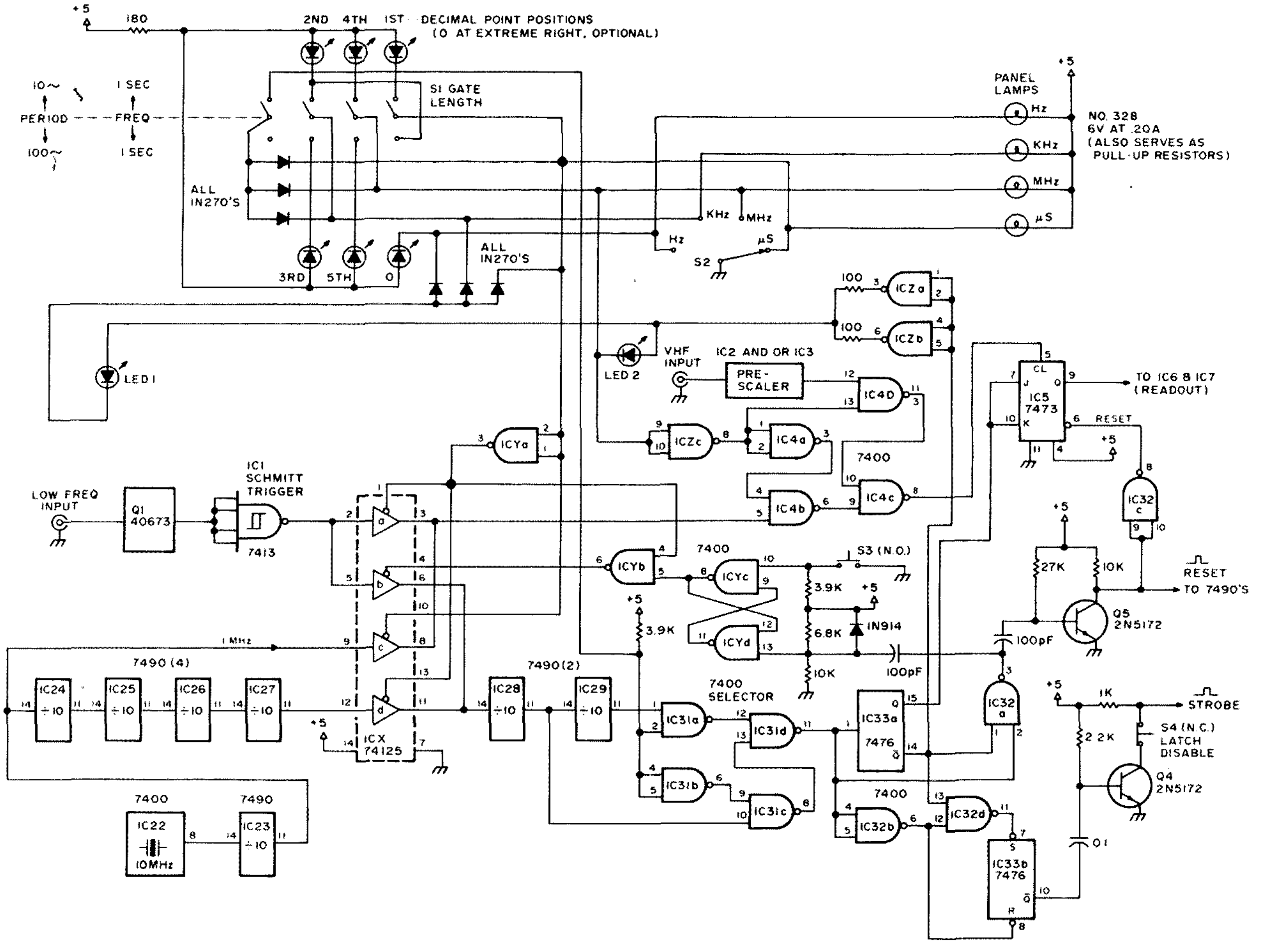

Fig. 3. Frequency and period counter with TTL's ICX and ICY incorporated around K2OAW's circuits, for clarity of functional tie-in. The counter is in period mode with S2 set to microseconds. For circuit continuation and more details, see "A Modern VHF Counter," 73 Magazine, *July, 1972, pgs. 5 to 13.*

confine this undesired transient and not allow it to distribute itself on your +5 volt line, a 1000 pF (or larger) mica capacitor connected to the cathode of the 1N914 (+5 volt side) and ground will tame it down.

For continuous operation, S3 should be held in or else paralleled with an additional switch.

When S2 is switched to Hz, kHz, or MHz, ICYa will have a high on both input pins because the panel indicator lamp for μs will act as a pull-up resistor. This will cause the a and d sections of ICX to be activated. The signal path is identical to Fig. 1 for a normal frequency counter.

After going this far, I managed to indulge in what may be called luxurious embellishment. But, nevertheless, I found it advantageous to have an LED flash during gating time, with one mounted above each BNC input jack and inserted through a small hole in the panel. Either LED 1 or 2 is driven by a pair of NAND gates ICZa and b, and isolated by a pair of 100 Ohm resistors to prevent overloading of the 7400 TTL chip. Each time the 7476 gates the 7473 JK flip-flop, the LED blinks simultaneously with either 1/10 second or 1 second duration in the frequency mode. In the period mode, the duration will depend upon how soon the 10 cycles or the 100 cycles have accumulated, or it may even remain lit continuously, due to the interruption of the signal in question, the 7490s (IC28 and IC29) hanging up as there is nothing to count!

Another helpful move was to install a latch disable switch, S4, a normally closed push-button, in the collector lead of Q4, the strobe (or transfer) transistor. At times the input signal may be marginal and not triggering the Schmitt trigger uniformly. This nonuniformity of signal flow can be ascertained and visualized, if there is a hesitation in the signal count in the frequency mode.

LEDs 1 and 2, as well as the decimal points, can be almost any type, depending on the brightness desired. The drive available from ICZ of 16 mA was adequate with an MV-10B-type LED. The 1N270 diodes handled the current adequately, but almost any surplus diode will work, as long as the forward voltage drop is below .8 volts during conduction; otherwise, IC31 will not switch.

The foregoing was built around an 8-digit nixie display counter and was first built using a pair of 7400s as a DPDT switch, which also worked as well as the 74125. With 8 digits, there was no necessity for the 1 MHz signal. For this reason, IC31 in Fig. 3 is not performing the same function as IC31 in Fig. 9 of K2OAW's counter. In Fig. 3, the selector IC31 selects the 1 Hz or 10 Hz in the frequency mode, and in the period mode it selects the 100-cycle or 10-cycle groups.

To those who did not take the printed circuit route, this should be fairly easy to adapt, but for those with the printed circuit boards, regretfully, it is too arduous a task. A second counter would be easier to build, as I do not sanction ripping up a good counter.

I hope that now you understand the advantage of a period mode at quite low frequencies and why it may be a helpful adjunct to a frequency counter, if the need should arise. ■

References

1. "A Modern VHF Counter," Peter Stark K2OAW, *73 Magazine*, Part I, May, 1972, page 53; Part II, July, 1972, page 5; Part III, Sept., 1972, page 89; corrections, Nov., 1972, page 92; update, Nov., 1974, page 26.
2. "500 MHz Scaler," Peter Stark K2OAW, Oct., 1976, page 62.
3. "Selective-Gates," *TTL Cookbook*, Donald Lancaster, TTL Data 74125, Texas Instruments, Inc.

Super Siren

—it's loud!

J. H. Everhart K3JE/2
313 Mason Rd.
Fairport NY 14450

I love to build gadgets. It's a rare time when I don't have at least two or three projects in the fire. Some, though, never quite get finished, because they fall off the bottom of my priority list. The one described in this article was one of the quickie types that I'd been thinking about for several years. A two-year-old boy, of all people, finally spurred its completion.

Numerous hobbyist publications have printed a variety of circuits for electronic sirens. I've probably breadboarded most of them. They never got beyond the rat's nest circuit stage, because they just didn't sound realistic enough. These simple circuits, because their authors wanted a low parts count, didn't sound to me like a real live siren. But for quite some time I played with these hobby circuits. I had no real need for a siren; I was merely fascinated by the sound.

Then I happened to come across the schematic diagram of a Federal siren-PA amplifier combination (Federal is a company name – no connection with the government). But I looked at the circuit and was horrified. The siren part alone took four transistors, and the amplifier had just as many. The schematic was put in my circuits file because it seemed much too complex.

Then a few months ago, my wife pointed out that our toddler ran to the TV whenever he heard a siren. When an emergency vehicle used one on TV, his face lit up with a smile. It occurred to me that he might like a toy siren of his own. Thus, the siren went to the top of my priority list. A toy for me was unjustifiable, but, if dad builds a toy for his kid, who says he can't play with it?

The Idea Takes Shape

With a more or less concrete goal in mind, it didn't take long for me to decide on the design of the toy. First, it had to be simple to operate. Kevin may be smart for his age (all parents are convinced that their little one is a budding genius), but the aim was for a fun toy, not a test in manual dexterity. The toy had to be fairly unobtrusive. Little people make enough noise by themselves without their toys screaming, too. Plus, my wife's sanity had to be considered. Low power drain was important. Too many Christmas or birthday toys lie unused because they go through batteries like their users go through diapers! To withstand normal usage, the toy should be childproof. I wanted a hand-sized (his – not mine) object, with no sharp edges or protrusions, that would not be too easily damaged. Finally, I wanted to use junk box parts, if possible, and I didn't want to take forever building the gadget.

The Circuit

The circuit was breadboarded twice before I was happy with its performance. The final schematic diagram is shown in Fig. 1. Q1 and Q2 form an emitter-coupled multivibrator, which controls the rate at which the siren wails. The 35 uF capacitor, C1, together with its associated resistors, shapes the square-sided waveform produced by Q2. So the siren's

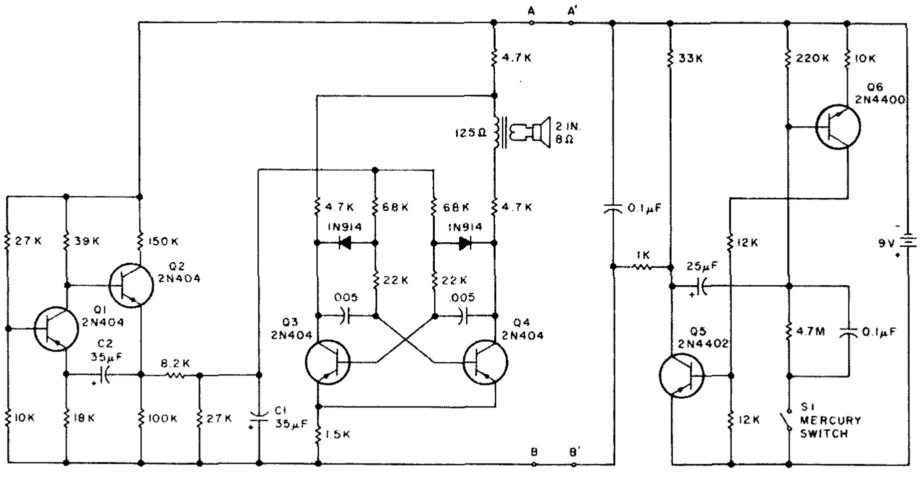

Fig. 1. Toy siren schematic diagram. Q1-Q4 are almost any PNP silicon or germanium transistor. Q5 can be 2N3702, 2N1132, 2N290T, or other PNP silicon. Q6 can be 2N5172, 2N697, 2N2222, or other NPN silicon.

 Feb 1978

W. W. Patterson WB6LQE
10914 Benfield Ave.
Downey CA 90241

CB to 10

—part VIII: the Publicom I

Have you noticed all those nice 23-channel CB rigs sitting on the dealers' shelves? Of course you have. But did you know you can buy them for about half price, or maybe less? You probably know that too, but you just can't think of any reason to get excited about it.

I'll give you a reason. Go buy one, and put it on ten meters.

Now, everybody knows that ten hasn't been much good for the last four or five years. But it does have an opening every once in a while, and, now, with the sunspots coming back, things should start picking up on ten.

Where To Go On Ten

Obviously, if you move it into the part of ten that has the most users, you won't be very popular, because most of the users around the region are using SSB and 100 Watts or more. So these 5 Watt AM rigs wouldn't have a chance. I suggest you move it up exactly 1.795 MHz.

The main reason for this choice is that it puts channel 4 on 28.8 MHz, which is Ten-Ten International's AM calling frequency. This gives us a good anchor for making contacts, with plenty of room to QSY up or down after the contact is made. Besides, it will keep us out of the way of the SSB people down below.

The Conversion

So much for the sales talk. I went out and bought one to play with – the Publicom I, a synthesized rig, complete with service manual, a REAL service manual.

This rig uses 6 synthesizer crystals in the 37 MHz region. These I replaced with 39 MHz crystals (39.395/39.445/39.495/39.545/39.595/39.645 MHz), available from Cal Crystal Labs, Inc., 1142 North Gilbert St., Anaheim CA 92801. Or, order some from your favorite quartz dealer.

One word of caution: Be sure to install the new crystals in exactly the same order as the old ones came out. Otherwise, the channels will be all mixed up. It took me about an hour to change the crystals, but this is understandable when you realize that I have 5 times as many thumbs as anyone else I know.

After the crystals are installed, the only thing left is to align the tuned circuits. Now, the service manual tells us that the cores in the coils have been sealed with wax, and the seals should be broken before turning the cores. The only one I found that was sealed was the 39 MHz oscillator coil. My new crystals took off quite happily without touching this, so I left it alone.

The first step is to adjust the receiver rf and mixer coils. These are L101 and L102. Incidentally, they go in (clockwise) to raise the frequency. This is true for all coils in this rig. Use a signal generator if you have one; otherwise, tune for noise.

Now to the transmitter. Connect a wattmeter in the antenna line, and a dummy load to the wattmeter. If you don't have a wattmeter, use an swr meter set in the forward position. It will do the same thing. Hold the mike button down, and adjust L302, L303, and L304 until you get a reading on the wattmeter. These three are the transmitter mixer stage and are pretty critical. It doesn't take much, so work back and forth across them, about a quarter turn at a time, until you get it peaked. Then go on to L305 through L308, tuning for maximum on the wattmeter. And that should about do it. Now get some of your friends to come up on the band and help you check it out on the air.

I don't expect anyone to make DXCC with one of these little peanut whistles, but you should be able to work consistently over 6 to 10 miles. With a beam you should do better. And, if we can get a lot of these rigs on the air, who knows, it could be a lot of fun. ■

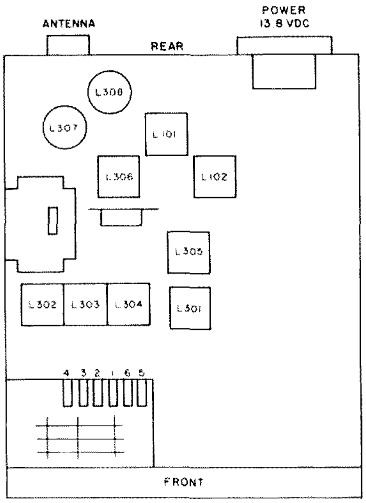

Fig. 1.

L. Foord VE3FLE
763 Gladstone Dr.
Woodstock, Ontario
Canada N4S 5T1

Coming Of Age

—an intro to ham radio

I was in the den, hunched over the rig intently listening to a quiet twenty meters one winter evening, when the knock came. Somehow, even before they actually arrive, one knows these moments are coming, and yet we never seem able to prepare ourselves for them.

"Come in," I said.

The door opened a crack, and there she was. All four feet of her, honey blond hair and dancing mischievous eyes. "Are you on the air, Daddy?" she asked. It was one of the first phrases she had learned, and along with it came the knowledge of the repercussions for not asking.

"No, honey," I smiled. There is something mysteriously sweet and charming about children, especially as they approach bedtime. They become very adult-like, speak in quiet reserved tones, abandon their habits of fidgeting and tormenting; they epitomize perfection in behavior. I have always suspected their innocence is feigned to avoid going to bed, yet I must confess I usually succumb to their charm.

"What are you doing?" she asked, crawling onto my lap.

"Just listening."

"Is Uncle Bill on the radio?" she asked hopefully.

"No, not tonight."

She was silent for a moment, staring attentively at the receiver. "Daddy, how come you can talk on your radio and the other kids' fathers can only listen?"

"Well," I replied, "it's a different kind of radio."

"Do you like talking to people?"

"Sure."

"Jimmy's daddy likes to talk to people, but he can't talk on his radio."

"For this kind of radio," I said proudly, "you need a license."

"Does it cost a lot of money?"

"Not much—13¢ postage."

"Then Jimmy's daddy," she concluded, "must be poor."

"No," I said cautiously. "It's not just the money. You have to learn a lot of things and write a test to get the license."

"Oh." And then after a brief pause, "I guess Jimmy's daddy is stupid."

"Teresa!" I said sharply, switching my role from educator to disciplinarian. "What have you been told about talking like that?"

She frowned at the retribution and then her face lit up as she discovered how to rephrase her statement and still get the same effect. "I guess he's not as smart as you."

"It's not that either," I said firmly. "I'm sure if Jimmy's father wanted to he could get a license. He's probably just not interested."

"Oh, he's interested."

"How do you know?"

"Jimmy told me his dad is always talking about your radio. He even listens to you on his hi-fi."

"Oh," was all I could muster.

"Let's talk to somebody," she suggested.

"O.K." I called CQ a few times and signed. Deathly silence greeted me.

"How come you're not talking to anyone?"

"The band's dead."

"How did it die?"

"It's not really dead. That's just an expression. It means there's no one around right now."

"Oh."

I could tell by her thoughtful silence I had to change the topic, if only to protect myself. "Do you know Daddy's callsign?" I had always been proud of the fact it was one of the first things she had memorized, to her mother's dismay, even before her telephone number.

"Sure. VE3FLE."

"Right. Very good."

"How come you didn't say it when you were talking on the radio?"

"I did. I always do."

"No, you didn't. You said victor echo . . . something."

"It's the same thing. Instead of saying 'v' I say victor. That way no one will mistake it for a 'b' or a 'c', because they sound so much alike."

"My teacher says if you pronounce them right no one will have trouble understanding you." She gave me a knowing smile. How could I possibly contradict her teacher?

"Well, she's right. Except sometimes on the radio it's difficult to understand through the QRM."

"What's QRM?"

"Interference."

"Why did you say QRM if you meant interference?"

"They mean the same thing."

"Oh. I think interference is better than QRM. What does interference mean?"

"Noise."

"Oh."

Parental duties and love aside, I was sure bedtime was overdue. "Guess what time it is?" I asked.

She ignored the hint. "Do you have any buddies?"

"Sure."

"I never hear you call anyone your buddy."

"Even though I don't call them that, I do have friends," I assured her. "Friends and buddies are the same thing."

"I know that. David's father has lots of buddies."

"How do you know?"

"Once when I was at his house David's father let me listen to his radio, and I heard him talking to a whole bunch of his good buddies. Maybe sometime he'll let you talk to them if you don't have any of your own."

The wisdom of youth. "Maybe. Right now I think we better get you off to bed."

"What instrument do you play?" She was still ignoring me.

"What do you mean? I don't play any instrument."

"That's what I thought. But I heard you say you wished you could get on the ten meter band."

"That's a different kind of band."

"Don't they play instruments?"

"No, I'm afraid not."

"Sounds like a silly band to me."

"I suppose. Now, off to bed."

"Good night," she said reluctantly, kissing me and climbing down. When she reached the door she turned and asked, "How come you never say ten-four?"

"Did you hear that at David's, too?"

"Yup. And I heard it on TV too. Don't you know what it means?"

I was hurt and didn't want to try to explain. "No," I said, smiling weakly.

"It means roger," she said. With a big smile she threw me another kiss and closed the door behind her. ■

LETTERS

from page 83

Advanced U.S. license using the foreign call and license of VP5ZZ aboard his yacht "Carina," a U.S. documented vessel. He is one of maybe 40 or more amateurs belonging to the waterway net operating daily on 7268 kHz each morning. He is indeed a knowledgeable person to the point, as he tells others the FCC and ARRL will never take action against *anyone* using VP5 calls aboard US boats. In this, one almost has to agree. However, there are some who hope to prove him wrong.

Mutual trust and good faith has, in the past, been the accepted rule for most all of the small islands. Most of the foreign licenses that have been given to U.S. citizens have been issued by the Turks and Caicos government in good faith, believing that the recipients of the licenses would use them as others before them had used them, only within their territorial waters or aboard Turks and Caicos registered vessels. However, this was not to be the case. The staunch waterway net member of Advanced standing broke the conditions of both his U.S. and Turks and Caicos licenses, taking his new VP5 call through all the foreign waters down to St. Vincent and Grenada, maritime mobile region 2. Soon others followed, and more and more are on the way.

This has been done before, but it wasn't broadcast to everybody on a boat nor was it supported by so many net members. Consequently, this was enough incentive, so others began to follow. They, too, found no opposition from shoreside amateurs. These phonies were a mixed lot. Some had expired tickets, others were studying for a stateside license; still others were trying to evade the purchase of a marine SSB commercial radiotelephone, and most of them did not even know what the knobs of the transceiver were for. Who helped them? Waterway net members, of course. For nearly 14 months, all could join in on the net frequency, 7268 kHz, no questions asked and no objections offered.

After awhile, the island amateurs began to get their fill of all this VP5 stuff; there were more VP5s than active island amateurs. People began to notice the loud VP5 leader; he could do third party traffic just by giving his stateside call. Then he could go back to his foreign call and use 7120 kHz and chat with other VP5s. Needless to say, this began to go over like a lead balloon. A St. Croix amateur, KV4FZ, broke the net frequency and told them the rules, point by point right out of the book, hoping this action would police the net members so they could police their VP5 buddies. This didn't do much good; some maybe gave it a second thought, but the VP5 leader twisted those facts around so much that it looked to net members that KV4FZ was the person breaking the law rather than the VP5s. This happens when no one cares about the rules.

The ARRL appears to have done nothing and it doesn't look like they will do anything. The FCC, *I think*, will do something, maybe more than listen to my story. The Turks and Caicos government is doing something about it. They will not renew any license that has been used outside of their waters. Renewal date is 1 January 1978. With no license, what do you think these people will do with their radio gear? Keep using it, of course, breaking enough rules to put amateur privileges in serious jeopardy. Reciprocal agreements going down the drain? Let's hope not. What can we do?

Until three weeks ago, I would say the VP5s could win by default. The ARRL and FCC weren't helping even when they were advised as to what was going on. However, the FCC in Puerto Rico is taking notice, but will they take action and impose a few fines and suspend licenses? I hope they will. The violators have been warned and warned again in the last three weeks. The VP5 leader has known the rules since the first day he left the Turks and Caicos island waters. The number of boats in the Caribbean waters is growing each year and the number of illegal radio operators can grow just as fast.

If this is published in *73* with my name on it, I suppose I will have to take my chances. There will be many people who would like to cut my anchor line one way or another, but if they were to understand the rules governing maritime mobile and why it is important to police our bands, *perhaps* they could be part of the solution and not part of the problem.

(Name and address submitted)

Let's check 7268 out and ask for details . . . how about it, fellows? — Wayne.

KUDOS FOR KEN

Ken Wilson's brilliant anthology of children's remarks about radio and electronics ("Electronics Study Guide," November, p. 176) was unquestionably one of the warmest and most delightful treatises in the literature. It bridged the gaps of young and old, technical and non-technical, writer and reader.

As a writer, I applaud his style; as an educator, I empathize with his obvious love for children.

Bob Grove WA4PYQ
Ft. Lauderdale FL

PALAVER

Walt Deiter's letter in the November issue amused me a great deal. This "we" business has been on my mind recently, since I have been eavesdropping on two meters in the national capital area. Around here, most of the guys on two seem to be either graduate engineers or nuclear physicists, judging from their palaver, but virtually everyone I hear refers to himself as "we."

Back in the early 1950s, this was kicked around quite a bit on one of the West Virginia nets, along with the new phonetics and symbols. Everybody pretty well agreed that a joker who calls himself "we" must have two heads.

Walt's jab about the "Lindberg complex" probably was wasted, as would have been a reference to Amundsen, Nobile, Judge Crater, or companionate marriage.

Gil Foster W3YNK
Temple Hills MD

DYING GASPS

CQ Magazine
Mr. R. Cowan, Publisher
14 Vanderventer Ave.
Port Washington, L.I., N.Y. 11050

Dear Mr. Cowan:

After reading your stand concerning a possible lawsuit against the ARRL, I and *many* other amateur radio operators became quite furious. This was poor timing, as my renewal notice came the same time as the January, 1978, issue. After talking to approximately 150 amateurs of two large radio clubs in the New England area and on the air waves, this may be the "death blow" to *CQ Magazine.* Your true color has come out!

Your stand is backing up all the illegal activities of some manufacturers and some CBers. It is saying, "The hell with the law — the dollar *and big business mean more.*" The ARRL is not trying to dictate anything, or attempting to make any law — it is just trying to get CBers and manufacturers (and amateurs, as well) to comply with the law.

I have nothing against the CBers (even though they got our 11 meter band), but I do object to them running high power and operating on the amateur bands. What skills are they gaining by buying an amateur high power amplifier and tuning it to 27 MHz? What about manufacturers

Continued on page 117

73 Magazine *Staff*

Put A Sony In Your Shack

—*the ICF-5900W's not bad!*

How about a 3-30 MHz *portable* receiver in the $100 price range that has double conversion, frequency readout to 2-3 kHz, a built-in crystal calibrator, a product detector for CW/SSB reception, etc.?

It is not often that a consumer shortwave receiver warrants much attention for amateur usage. Usually such receivers have the barest of essentials for good shortwave reception, either on the amateur bands or on the international shortwave broadcasting bands. But the Sony ICF-5900W is a bit different. This receiver is the U.S. export version, just being seen here, of the Sony ICF-5900 domestic model, which has been on the Japanese market for more than a year. The ICF-5900, in turn, is the latest in a group of increasingly sophisticated portable shortwave receivers which Sony has brought forth in response to the booming SWL market in Japan. These receivers are all a far cry from the usual cheapie AM portable with a shortwave band added, although competitive factors still make economic design a primary consideration.

The ICF-5900W, with a solid array of features in a 22.3 x 23.4 x 10.2 cm case, and powered by three D cells, will not qualify as a primary station receiver. But, it has a lot to offer as a secondary receiver, for casual monitoring of the amateur or broadcast shortwave bands, as a receiver for QRP portable operation, and as a receiver for signal monitoring and measurement purposes.

Basically, the ICF-5900W is an AM/FM receiver, with three shortwave bands that cover from 3.9 to 10 MHz, 11.7 to 20 MHz, and 20 MHz to 28 MHz. The circuit feature that makes the ICF-5900W exceptionally different is the use of its FM i-f as the *first* i-f on the shortwave bands and the use of a second local oscillator, tuning at a constant rate, to give a calibrated 300 kHz bandspread over any desired 300 kHz portion of the shortwave spectrum. The second i-f is the usual 455 kHz one.

Fig. 1 shows the circuit diagram in simplified form. The circuit switching that goes on between AM/FM and SW could only be devised by an advanced Japanese engineer, working on consumer-priced products. It is best left for a purchaser to ponder over for several weeks, with the service manual in hand. But, on the AM band, the receiver is the usual single conversion affair with a first mixer/oscillator stage working into a 455 kHz i-f chain. On the FM band, the usual separate FM front end is found (rf amplifier and mixer/oscillator stage) working into a 10.7 kHz i-f. Unlike the usual Japanese AM/FM radio, however, the 455 kHz and 10.7 MHz i-f stages are not totally combined, but are initially separate blocks. In reality, this costs only a few extra transistors and RC components. When switched to the SW bands, the incoming signal is first routed to a doubly-balanced first mixer stage, using a pipolar transistor — an unusual type of circuit to be found in any consumer product, as yet, but logical for this application, due to its immunity from overload à la the Atlas transceiver front end approach. This stage is used as either an up or down converter, depending upon the shortwave band involved, to get the signals in a given band converted into the 10.7 MHz i-f range. The first variable local oscillator working

into this stage (controlled by the main tuning dial) is set to zero beat, with the desired marker of a built-in 250 kHz crystal calibrator (for instance, at 7.000 MHz). The built-in bfo is turned on, of course, to obtain the zero beat. The second local oscillator, which converts the 10.7 MHz signal down to the second i-f of 455 kHz, must be set at its "0" position (actually 10,700 kHz) during the above adjustment. This oscillator is variable over the range of 10,550 kHz to 10,850 kHz. Now, when the second local oscillator is tuned (bandspread tuning), it can tune an *incoming* signal range of ±150 kHz (from 6,850 to 7,150 kHz, in the example given).

The bandspread tuning dial is calibrated for +150 kHz and -150 kHz, with markers on the dial at every 10 kHz. Depending on how carefully one calibrates the main tuning dial, etc., one can come to within several kilohertz of an exact frequency. By further marking divisions on the outer dial on the bandspread tuning, one probably could come down to 1 kHz readout. The bandspread tuning calibration is fine, when working on the low end of any band, but a bit awkward on the upper end of some bands. For instance, if one sets the main tuning to the 250 kHz markers at 21,250 kHz, one has to remember this setting, as the actual received frequency is varied ±150 kHz from this setting by the bandspread tuning. The tuning rate is 100 kHz/revolution on the bandspread tuning control, which is not bad at all for even SSB or CW reception with a bit of practice.

The use of the 10.7 MHz i-f as the first i-f does, of course, provide a number of benefits. The frequency is high enough for excellent image rejection, even at 15 and 10 meters – an unusual feature for an expensive receiver. Also, the gain of the first i-f across its bandwidth is flat enough to eliminate the need for complicated multiple-gang tuning circuits. But, the simplified tuning system does have to pay its price at frequencies much above 20 meters. Sensitivity begins to fall off rather rapidly on the highest shortwave band, being in the order of 8-10 uV.

In spite of the apparent poor sensitivity on the higher frequency bands, the receiver is more than suitable for any casual listening purpose on the higher bands and directly usable as a QRP station receiver on the lower bands.

The selectivity on the shortwave bands is determined by the 455 kHz i-f chain and measured about 4.5 kHz at 3 dB down. This is hardly outstanding selectivity, but, by manipulation of the bandspread tuning and treble and bass tone controls, one can do pretty well even on a crowded band. The product detector, as distinguished from the separate AM diode detector, is automatically switched in the circuit when the bfo is turned on.

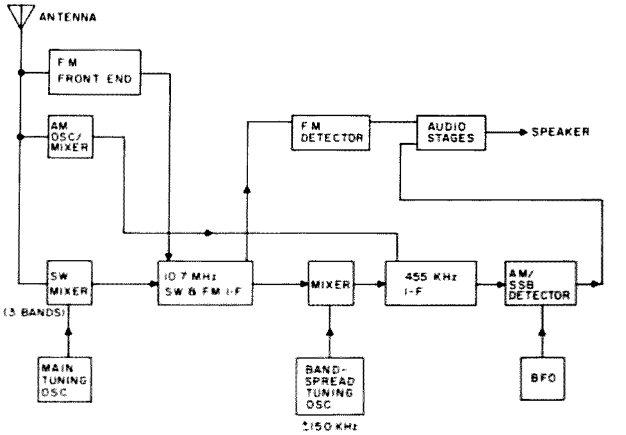

Fig. 1. A functional block diagram of what happens inside the new Sony ICF-5900W receiver. The ICF-5900W is the U.S. export version of a popular AM/FM/SW receiver originally developed for the domestic Japanese market, the ICF-5900.

As it stands, the ICF-5900W is an interesting receiver to consider, for utility usage around the shack or for a youngster who has developed a serious interest in shortwave. There are, of course, numerous things that could be done to improve its performance, and these are best left to the needs of individual users. For instance, the 250 kHz markers are obtained by dividing down a 500 kHz crystal. This crystal could also be divided down to obtain 100 kHz markers and, therefore, provide more convenient bandspread readout on some bands. An active RC filter could greatly improve selectivity, and the bass/treble tone controls could easily be converted into the control pots for such a feature. With real skill (it's a pretty well packed chassis), one could even build a QRP transmitter in the radio in the battery compartment area.

The ICF-5900W is becoming available now through U.S. Sony outlets, or, if you have a friend in JA land, he can get it for you for about $85.00. It is also available through supply houses that cater to SWL buffs. A service manual for it is available at $1.75 from Sony service outlets (or direct by mail order to Sony Corp. of U.S.A. in NYC). The manual contains very specific alignment information, and one could, if he desired, modify the band coverage to cover the lower end of 80 meters or the complete 10 meter band, by giving up some coverage in the 20-21 MHz area. ■

EDITORIAL BY WAYNE GREEN

from page 97.

training newcomers for their Novice licenses with class meetings, preferably once a week. It is not absolutely necessary to use the *73* training tapes and license study guides, but it sure won't hurt.

General Classes: Getting newcomers into our crowded CW bands is not enough. Clubs must offer classes to upgrade Novices to General . . . at least.

TVI/RFI: As a service to the members and the community, clubs must have a TVI Committee. It is strongly suggested that this committee offer its services not only to the amateurs in the area, but also to local CB clubs, as a way for amateurs to participate and help the FCC in the reduction of RFI and TVI.

Turkey-Hunting Team: A club must set up a direction-finding team for hunting down any unlicensed operators attempting communications on any amateur band. This team or teams should practice regularly and develop equipment and techniques for the quick location of any illegal station. The team could offer to work with local CB clubs on the location and identification of over-powered CB operators or operators using illegal bands.

Emergency Committee: A club must have an emergency coordinating committee to prepare the club for disaster service. The EC should know the locations of all emergency equipment, repeaters, HTs, generators, and have liaisons with all other radio services in the area, such as CB clubs, police, fire, taxi, truck, etc., radio systems.

Clubs meeting the above minimum requirements and interested in affiliating with *73 Magazine* should have their club secretary send the details in a letter of application to Morgan Godwin, *73 Magazine*, Peterborough NH 03458. Newspaper clippings backing up club services won't hurt. Copies of the club newsletter will help, too.

There are no requirements for *73* subscriptions or insistence on the use

Continued on page 125

Amanda King VE7AQS
PO Box 46316, Stn. G
Vancouver BC
Canada V6R 4G6

How To Compete With An HT

—join 'em or leave 'em

If a man has a choice between his lady and amateur radio, chances are amateur radio will win out!

Two years ago I found myself competing with a certain hand-held two meter portable. Derrick took it with us on dates, in the car, to restaurants, on walks, and even to the university. He chatted with his two meter pals while I silently hoped no one would think he was a policeman. I winced whenever I heard a squelch break.

I was also introduced to friends of his, dedicated hams. I spent many a social evening trying to show some signs of intelligence while Derrick and his ham friends compared rigs and spewed forth radio jargon.

Gradually I realized I was missing out on something (besides half the conversation and much of my man's attention). There seemed to be a special bond between ham radio enthusiasts — friendship, willingness to help others, satisfaction for the creative ham in designing and building equipment.

Then, as now, I enjoyed "designing and building" stories, poems, and drawings — why not ham radio? So I madly convinced myself I should try for my license.

I mentioned it to Derrick. That Christmas I received a $130.00 Heathkit build-it-yourself QRP rig. At that point I realized he was serious about my decision.

I buckled down and bought books which explained all the theory and regulations I needed to know. I built the Heathkit and in the process learned one end of a soldering iron from the other. I learned what resistors, capacitors, inductors, and integrated circuits look like, what they do if you wire them up correctly, and what they do if you don't.

It wasn't all smooth going, however. It took me a week to understand amplification. (How can a tube *do* that?) Resonance was another big stumbling block, and when the Morse code came along, I despaired.

Learning the Morse code is like learning to read music backwards. You hear the note and put it on paper. If you're very good at it, you can put many of these notes on paper per minute. I was not very good at it.

After the initial hopelessness wore off, I found my code speed increasing at a fair rate (those *73* code cassettes helped a lot). My general understanding of radio theory also improved, to my surprise. Derrick began to make threatening noises about setting a date for my test, so to appease him I made my appointment for the following month.

The day before my test, the weather was uncharacteristically beautiful and warm. We turned down offers to go sailing and spent hours indoors reviewing diagrams for a receiver, transmitter, and a few other, simpler things. I practised Morse code for a couple of hours and

worked myself into a nervous snit. That night I didn't sleep at all.

The big day dawned rainy and cold. I drove downtown to Communications Canada. The secretary told me to wait. I waited, feeling my stomach twist into complicated knots. Finally someone beckoned me into a room and gave me the multiple choice theory paper.

The questions were not difficult, but in my state of mind I wasn't able to appreciate it. I weltered through, however, and somehow managed to pass the diagrams and the Morse code sending tests.

But like many other hopefuls before me, I failed my 10 words per minute Morse code receiving test miserably. I walked out of there feeling distinctly relieved. The worst was over, and I was determined to pass the second time.

A week later I did just that.

Ah ... that delicious feeling of hard won success. I floated away with the ink still wet on my license, found a phone booth and called Derrick at work.

"I'm VE7AQS!" I babbled to whoever answered the phone.

A few weeks later I bought a two meter portable and proudly chatted with my two meter pals. I made a few contacts with my Heathkit and even designed and built a power supply for it, which didn't work, but I had fun doing it.

At around that time, coincidentally, Derrick became my fiance, and we were married two months later by another ham, WBØNST, who just happened to be a minister.

It's worth being a ham – not only for the friends you make, the excitement of new contacts, the fun of tinkering – but for the bond you share with other hams. In my case it's a very special bond! ■

David J. Brown W9CGI
RR 5 Box 39
Noblesville IN 46060

S.A.S.E.

—sealed after something escaped?

No, this is not an article about horses, the barn they live in, or the door you didn't close. It's an article about a courtesy, I guess, started by someone, sometime (historian I'm not!), and designed to relieve a burden – financial and otherwise. I refer to the S.A.S.E., SASE, sase, etc., that goes by all of these titles – depending on where you see it – and is the SELF ADDRESSED STAMPED ENVELOPE!

Now that I have your attention – and have probably got the back hair up on many guys who are thinking, "Who is dumb enough not to know that?" – let me point out that I am writing this right after answering my last 8 queries regarding my past articles. If you think I am angered, I am. But for you fellows who are asking me for help, I am only too happy to provide same – if I can and if you will let me!

You can't build anything from this article, but if you follow it you can make your life and building other projects a whole lot easier – if you only write one author for help. If I may, let me give you the what, why, and exceptions in that order. Trivial as some of these things may seem, they are large and often insurmountable problems for authors who offer their wares for publication and then try to help readers really build or learn from their writing. Pure ego makes any author in print interested in someone who reads his offerings. A great many are further willing to help clarify their work. But this article isn't meant to do more than touch on the other fine points of getting a reply from us grouchy old authors. Such things as illegible or confusing questions, etc., are a whole different bag – believe me!

Now if I sound like a grump, follow on. If you did not have a question as to the author's intent, method, idea (parenthood?), etc., you would not have written – right? By the same token, sometimes your questions are as confusing to me as my work was to you. If my answer is not complete or even on the right track, write again. I don't bite!

By all means type your letter to me if you can! I can read longhand (some of it), but it just plain takes longer. A hint to the wise. If it is typewritten, double spaced, and the SASE is enclosed, it gets top priority – same-day-as-I-receive-it priority! If, further, it is from anywhere out of the U.S., it gets doubly special care and attention. I can only say that if you have ever *tried* to be a ham outside our borders, even as a GI, you understand. I'm not slamming any foreign ham or his nation, but just sympathizing with some of the hardships they endure (compared to ours).

But, as I said, the person has gotten his letter to me, stated his problem clearly and as concisely as possible, added a sketch or two where needed, and has perfectly managed to tell me just what he needs or wants from me. What do I look for the minute I open and sort my mail? Yep, the SASE. Now just why the heck is it so important? Since Uncle's Pony Express has settled on the unlucky, expensive, and, all things (service) considered, idiotic figure of 13¢ for the meagerest of small amounts sent through the postal machine, it behooves me to ask for help in my articles in the form of a requested SASE! This is the pure monetary point.

So now, say, you just send two, or even three stamps? Wrong! For your sake more than mine. I *will* dig up an envelope, stamp it with one of your stamps, address it for you if I can read your address, and get you a reply – I ignore nobody – but I'll do it in *my* time, and after the others are taken care of. This may sound like a bitchy attitude, but I please 10 guys who follow the rules for every one I tick off who doesn't and has brought on his own problems.

Just what are the "rules"? They vary a little from author to author I'm sure, but if you go by the following, you won't go wrong. Bear in mind that it is *for* you that I am doing this! I want to help, and so do others.

(1) Use business size envelopes to me and for the SASE. This makes getting the SASE into the letter to me easier for you, and easier for me to get more back to you – all for the same 13¢ fee. If you fold the SASE in three from side to side, it fits nicely and won't jam the postal gearworks.

(2) Make the SASE just that. Put your return address on the SASE in the destination portion – lower right center – and print, for your own sake. Don't forget your zip code. Put the return address in the upper left corner, too. If you found my address for the other letter and envelope, you can easily repeat it up there. And don't forget and put yours up there – the postal persons tell me that really confuses things if one becomes partially obliterated. Evidently they never heard of anyone sending themselves mail, so use mine. Sound nitpicky? NOT really – every little bit helps.

(3) Then there is the self-seal envelope. Send envelopes of this nature at your own risk as SASEs. Their chief problem is that they self-seal – on the way to me – and boy, do they like to stay that way!

(4) Stick the stamp on the SASE for me, too. I'm not trying to make you write the answer, too; it's just that you would be surprised what those little devils can and absolutely will *permanently* stick to besides the desired SASE.

(5) As mentioned earlier, *do* include all of the above – especially the envelope. For any author, any time you can save him generally comes

right back to you in a speedier reply. I resort to a form letter reply *only* when I have to, and then only with added notes to the individual. I use the write-in-the-margins or goodness-knows-what for letter reply material (steno pads, etc.) to get to one objective – a complete *and* speedy reply. Next year, my answer won't help too many people!

(6) Now about some special cases. I mentioned the out-of-U.S. ham before. The obvious language barrier is ever present, so be sure that *you* put your return address on the SASE in the destination spot. I don't know Swedish for street from township, so if you address it you know it is right and will be recognized by your local postal authority. Remember, they have to deliver it to you in the end. As for stamps, the general rule has been IRCs, but I find them to be a pain. If you buy the IRCs there, I have to cash them in here at a post office. A pain, but your intent is appreciated and don't panic if you usually do send them. Not all of us U.S. types feel like me. I happen to collect stamps, too, as most or at least a lot of hams I have talked to do. Even if I do not collect your country, I find all of them interesting and can trade them or keep them. Others may feel the same. Even no attempt at the postage part is fine. A couple of guys sent coins (I hope for not more than the postage) and I found them most interesting. (Matter of note: Be sure it is legal to send coins out of your country.)

I think I have covered about all the bases, or at least the really important ones. Please try to help us help you. That's really all this boils down to – a plea for help.

At the risk of sounding redundant, if there is anything you don't follow about this, an SASE to me will bring you a speedy reply. ■

V. S. Rajagopalan VU2JS
51, 12A Cross Road
Vaiyalikaval
Bangalore 560003
India

A Ham's Life Cycle

—*what you're in for*

I have held a ticket for the past five years, and during these five years, the practice of this hobby has seen many ups and downs. Its practice is governed by so many factors that I think that it will be useful to summarize them. I am tempted to call them "laws," because they seem to be applicable to a large number of hams. These "laws" pertain to the practitioner rather than the hobby itself.

1. Every ham passes through the novice phase. Note that this has nothing to do with the Novice class of hams in the "W" land. This law is applicable to every ham who gets his ticket for the first time, be it a Novice ticket or Advanced class! Under this condition, the keen new amateur is preoccupied with his amateur radio activity. For most of the time he is thinking of how to acquire a good receiver or transmitter or to put up an antenna. His thirst for knowledge of circuits seems to be boundless, especially if he happens to belong to some profession not connected with electronics. Many times he does not know the merits of his equipment. He does not know when and where to expect DX and how to work it when he finds it. He simply monitors the band at times when no DX can be expected due to propagation conditions. Naturally he does not hear many stations and thinks that his receiver is poor!

His purse permitting, he goes on buying and stocking junk in the belief that it will be useful one day or other. But this belief is justified in VU2 land, where it is very difficult to get some essential components when you badly need them. Many times he is not sure of how much to pay for the junk. Thus at times he falls prey to some unscrupulous people who take undue advantage of the inexperienced keeness of the novice. When he comes across junk, he does not know what to pick up and what to leave out. He is very keen on collecting QSL cards and displays them proudly and prominently in his shack. He also lets his friends and neighbors know about his hobby and sometimes arranges demonstrations. Sometimes such a demonstration is necessary to win over a neighbor to get the necessary permission to tie one end of your dipole on his wall. He promptly becomes a member of the local amateur radio club and regularly attends its meetings.

2. The ability to work DX depends upon your capacity to be awake during most of the night. This "law" has special application to VU2 land and certain types of people. In VU2 land, DX can be had mostly during the night and early morning. The early morning period is brief, and sometimes signals vanish all of a sudden (especially the 7 MHz band). The availability of DX mostly during nighttime only may be due to the propagation conditions and also time differences between the various parts of the globe. It is extremely difficult to get a "W" station in VU2 land during daytime, except perhaps when you have an extremely good receiver and antenna and sufficient power is radiated by the transmitting station.

Regarding people — there are early morning types like me. They get up early and get into top gear mentally and physically during the early morning period and reach their peak around noon. Afterwards, efficiency goes down. By about 9 pm, they are tired mentally and physically and ready to go to bed. Thus DXing suffers. Frustration builds up when your fellow ham says that he works lots of DX during nighttime.

3. The ability to enjoy the hobby is directly proportional to the spare time available. *Corollary*: The ability to continue the hobby after getting XYL controlled depends upon the will and pleasure of the XYL. It is the belief of some hams that you are not likely to be as active as before getting rockbound. Fortunately, it is not the case with me! At least so far!!

4. The ability to enjoy this hobby is directly linked to the state of your health and energy. To be a constructor or DXer needs plenty of patience, and patience will be in short supply when you are not well. This is especially true in construction work. Simple ideas will not come to you when you are tired. But the same will strike you when you start afresh the next day. Problems which were difficult the day before will be solved quickly and easily. As per my own experience, it is better to postpone construction work when you are tired or sick. Otherwise ruined components or equipment or injury to yourself will be the result.

5. The ability to continue as a constructor is directly

proportional to your ability to spend. As you know, home brewing and innovation are one of the main aspects of this hobby. Many people home brew amateur equipment mostly for the satisfaction it yields and to some extent for the economics of it, provided junk is available. For the constructor, the articles in the various ham magazines appear to be simple and useful, and he wants to try them. But, as you know, the limitation lies with your purse. In VU2 land, there is an additional difficulty of availability of components. Just for want of an FET or even something as simple as a variable capacitor, simple but otherwise very useful projects cannot be taken up. Many times I do not dare to look into construction articles for this reason.

6. The "Contented" Phase: Many hams will pass through the contented phase sooner or later. At this stage, the ham has good operating and constructional experience. He is fully aware of what is possible under the circumstances he is placed in. The limitation of his purse is a main factor. Also he is by now crystal controlled with harmonics. Through a few years of struggle, he has acquired a good station and enough junk. By experience, he has found that the least expensive way of practicing the hobby is to operate the rig. Probably he may switch over from construction to rag chewing! He is no longer mad after construction articles. He is very careful while choosing any project. He will check if the project will clear any of his immediate operating difficulties. Many times he resorts to other less costly aspects of the hobby, like writing articles, organizing local amateur radio clubs, helping the publication of a newsletter for his club, training new entrants, etc. At this stage he may mostly operate the club equipment. ■

Steve Kraman, M.D. WA2UMY
629 Cortelyou Road
Brooklyn NY 11218

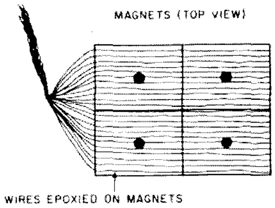

Fig. 1.

The $5 Magnetic Mount

—cheap and sticky

All I wanted was a cheap magnet mount to support a ¼-wave two meter whip on my car. Is that too much to ask for? Apparently so. All over New York I trekked — to Lafayette, Radio Shack, and Gem, and everywhere I saw the same thing — mag mounts below, short CB antennas above, and (hopefully, for the CBers using them) a loading coil within. Don't you have just the mount? Nope, sorry. So was I. Eventually I ran into a friend who had this very nice 5/8-wavelength whip on a mag mount that worked well and looked good but would cost about $30.00. That's not cheap! At that point, I decided that it must be possible to roll your own, and so I did. The results, using all new parts, should cost less than $5.00; using my junk box, it cost one dollar. The appearance is almost commercial.

The magnets I used are 1 inch by 5/8 inch by 1/8 inch and cost 10 for a dollar at Radio Shack, but any similar square or rectangular magnets would work. I used 8 magnets stuck together in 4 piles of 2 (Fig. 1). The body of the

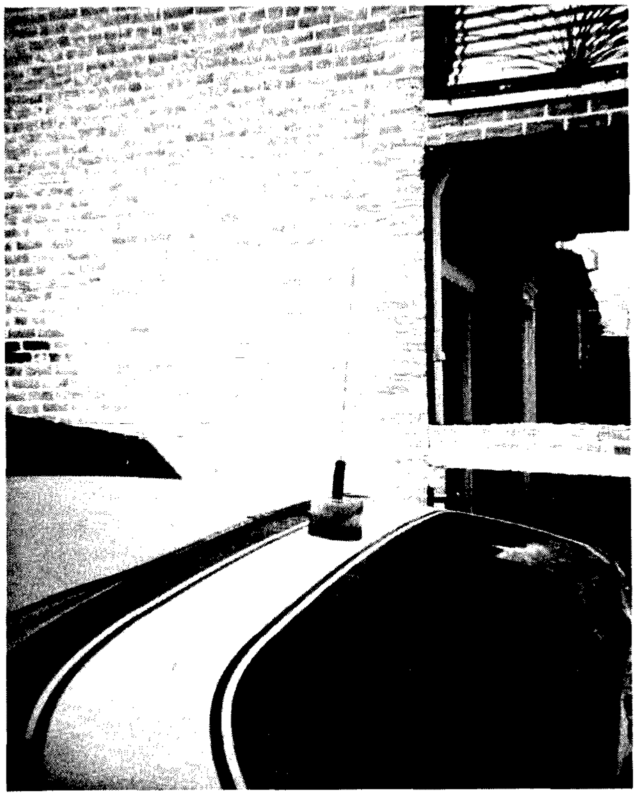

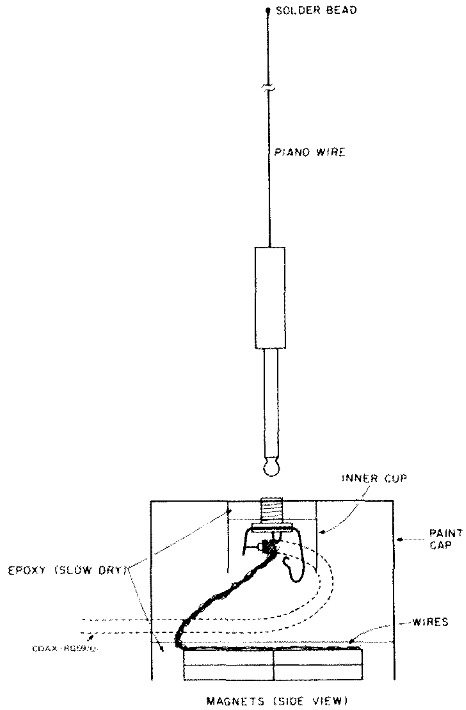

Fig. 2.

mount is the cover from a can of Krylon spray paint (in the color of your choice). Another brand of cover will work, provided that is has the inner cup, as in Fig. 2. Almost any good socket can be used, but I chose a phone socket, since it holds the plug firmly, is simple to mount, and is all I had in the junk box. Avoid RCA phono sockets; the antenna may fall out. If you use an SO-239, solder up the coax before setting it in epoxy. Mount the socket as per the diagram, and fill the inner cup with epoxy to the level necessary to hold the socket firmly without covering the electrical and mechanical parts.

Next, put the magnets together as shown, and paint them with epoxy. Before letting it dry, unravel some cable shielding and lay the wires across the top of the magnets evenly. Place a piece of waxed paper over the wire, and hold it in place with a weight until it's dry. Twist the excess wire together, and solder it to the shield connection of the plug. Then put a small hole in the side of the body of the mount, pass the coax through it and once around the small inner cup, and solder it to the socket.

Fill the larger cup of the cover about ¼ full with epoxy. Place the magnets down on a piece of waxed paper, quickly turn over the cup, and place it over the magnets so that the edges of the cup are tight against the paper. The glue will flow down and cover the magnets, sealing them in place. Put a weight on top of the unit while the epoxy sets to minimize leakage. Nineteen inches of piano wire or clothes-hanger wire soldered to the plug completes the antenna.

On-the-air tests have been excellent, and the magnet mount stays put under all road and wind conditions. And, even better, when you get out of the car, it's very easy to hide the antenna. ■

LETTERS

from page 117

notice the fact that Cambria County turned in a decent score in the 1976 SET. I was the motivating force behind that SET participation, and I will tell you that SET participation has *little or nothing* to do with proper operating in a major disaster such as the Johnstown flood.

Is there anything in the SET that prepares you for complete devastation of your community? How about the fact that almost all of your best operators are unavailable for ham operations because they are either more valuable at work or they were themselves victims of the disaster? Stick that in your SET! Does the SET prepare you for an influx of hundreds of hams from outside, with no clearly qualified individual to take charge of the effort of coordinating them? Not in a pig's eye.

And yet you still cling to the idea that SET participation will cure the ills mentioned in old sanctimonious' letter.

I talked to George Hart on the telephone about five days after the flood, and he indicated that *QST* would be *very* interested in an article about *solutions* to the problems we encountered in Johnstown. As soon as I could get a chance, I wrote that article and submitted it to *QST*. You then sat on it for four months and returned it with a rejection letter.

My article may not have been much, but it sure was better than the garbage in the December *QST*. At least it presented real, concrete solutions — derived from experience — to the problems that we had. No one was more vocal in his criticism of the Johnstown operation than I — *during* the operation. But after it's over, we don't need nonconstructive criticism, and neither does anyone else.

5. *Why are you unable to understand the difference between good ham communications and good communications?* I'll admit that the communications on 34/94 after the flood was darned inelegant. It was *not* good ham communications, as your article points out. However, there is a dichotomy between good ham communications and good communications! We *did* furnish good communications. There were problems; there were fits and starts and a lot of incompetence. But the communications was *good* because it was the only communications we had! Oh, boy, it was good. It was better than anything else in the world after that flood. For many operators, who were unfamiliar with formal traffic handling and with local geography, it took guts to even pick up the mike. These people were united by one desire — the desire to *help*! That's the only qualification they had. So they picked up the mike and they talked, and the life-saving communications that resulted was priceless. Inelegant, but priceless.

Look, I know how bad things were. If you want to use the yardstick used by old sanctimonious, then you're right and we were wrong. But, I'm telling you that you're using the wrong yardstick and your band-aid solutions will not help the next community faced with the set of problems we had.

Before you printed this garbage, couldn't you have contacted someone from the local area? The EC, for instance? Couldn't you have checked the facts and the social ramifications of this article?

I am resigning as EC, for it is obvious that the ARRL has no regard for the post. If you did, you would have contacted me for confirmation before this was printed.

I know that you won't print this entire letter, even though I challenge you to! However, I demand that this be printed in *QST*, at least in the letters section:

> "Your article, 'Johnstown — One Man's Opinion,' in the December issue, was a slap in the face to the many fine operators who came to our aid when we needed it.
>
> "The narrow viewpoint espoused by your author, your refusal to print his name, and his unfamiliarity with local conditions render his argument unusable and unhelpful.
>
> "Any SET participation, while valuable, will not prepare a community for a mass disaster such as the Johnstown flood."
>
> /s/ Bill Rogers N3WR

Please print *at least* this condensed version of my viewpoint. It is the least you can do to help erase the harm the article caused. The inflammatory language in the article was particularly distasteful and uncalled for. "Wild-fowl preserve," indeed.

I hope that old sanctimonious' home town gets ten inches of rain in as many hours. Let's see what he does *then*! It's easy to breeze into Johnstown five days after the flood and fire a volley of useless criticism. It surprises me, however, how easy it must have been to get this garbage printed in *QST*.

I missed four hours of sleep last night trying to decide whether or not to cancel my *QST* subscription and my ARRL membership. I have decided not to, but it was touch-and-go for a while. I believe that my only reason for hanging on is *tradition*. How many more times the ARRL can screw up and still have tradition on its side is more than I can answer. But after incentive licensing and the other junk from Newington, you guys had better do well at WARC 79! I believe that if Wayne Green is right and WARC 79 is a fiasco for hams, people will desert the ARRL like they would desert any other sinking ship.

William E. Rogers N3WR
Johnstown PA

Bill, the only vote that counts with the ARRL is your money. Keep sending money. — Wayne.

Ham Help

Someone gave the boss's son a Hallicrafters S-38C. I'm not familiar with the rig, nor are the boss and son.

If any of your readers happens to have a manual with schematic on this one, I would appreciate hearing from them (a Xeroxed copy would suffice).

David L. Larson
1301¼ South First
Harlingen TX 78550

Since I'm allergic to tobacco smoke and can't go to club meetings, I and my wife would enjoy meeting fellow hams and their wives who are non-smokers, in the Montgomery County, Maryland area. Besides building and experimenting in electronics, I like to paint portraits in oil and do color photography, developing, and printing.

Zoltan T. Bogar W3CJM
1921 Marymount Road
Silver Spring MD 20906
(301)-598-6137

Our San Jorge Radio Club is a newly-founded organization in this small city and needs any kind of books and literature concerning electronics, antennas, etc. We are also looking for any type of usable equipment, 144 MHz, communication receivers, and materials that our members will certainly repair and put in condition to be on the air. We are lacking funds, so any kind of donation would be happily and sincerely appreciated.

Radio Club San Jorge LU8FFV
P.O. Box 70
2451 — San Jorge (SFe)
Argentina, South America

I'm itching to get on two meter FM. I need the schematic and conversion data on the Motorola Model T43A 150-170 MHz FM transceiver.

Billy L. Nielson WB4APC
PO Box 338
Radcliff KY 40160

Corrections

My original Zeppy Vertical antenna as shown in the August, 1977, issue of *73 Magazine* needs an additional component to obtain a 50-Ohm impedance. A one-turn coil approximately 1 inch in diameter directly across the coax termination and shortened driven element (18 inches) gives a perfect match on the prototype antenna. This was checked out on a Bird model 43 wattmeter. The shunt coil size and length of driven element should be cut to length by trial and error until a match is obtained. The spacing of the 57-inch element and 18-inch element is not very critical, although it should not be made too large. Not more than 1.5 inches on 2 meters or 7 inches on the HF bands is reasonable. The antenna can be used on other bands by scaling the dimensions directly with the wavelength.

Experience with several antennas on a sailboat mast shows the Zeppy Vertical to perform better than a ¼-wave ground plane, but not quite as well as a 5/8-wave antenna with ground plane. The addition of the shunt coil makes the antenna electrically the same as a "J" vertical, although the Zeppy Vertical is a slight improvement since mounting is simplified. Also, performance should be the same regardless of which element is driven. If one is better than the other, the coax feedline is probably radiating.

Gene Preston K5GP
Austin TX

Since submitting my article, "Simple Scanner For the IC-22S" (January, 1978), I have found that the operation of the scanner is intermittent with some 4017 chips. This condition can be corrected by modifying the power input to the scanner as shown in this revised version of Fig. 1.

George Tam KH6EM
Honolulu HI

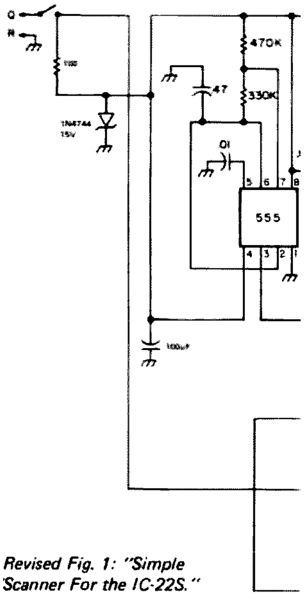

Revised Fig. 1: "Simple Scanner For the IC-22S."

The gremlins have struck again. 3 or 4 corrections for my *FCC Math*, December, pp. 19,20.

(1) P.19, second column, bottom: 5 x 7/5 x 9 = 7/9 should be 5/9 x 7/5 = 7/9.

(2) P.20, left-hand column, top: "Only zeros at the extreme right or left can receive that kind of treatment" should read: "Only zeros at the extreme right or left *of the decimal point* can receive that kind of treatment."

(3) P.20, column 3, 4th paragraph from bottom. That rule, "If you didn't . . ." is hardly a rule.

(4) P.20, right-hand column, Note: "Eight-six billion" should be "Eighty-six billion."

John F. Leahy WB6CKN
Gonzales CA

I thought I would drop you a line to correct an error in the article, "All About Transceivers," Dec., 1977. The Kenwood TS-820 has always been available with an optional dc power module, DS-1A, for S65 list. The new TS-520S no longer includes the dc power module as standard equipment. Both can be fitted easily by either the dealer or purchaser. The appropriate place has a blank plate covering an opening for the module, with holes pre-drilled at the factory.

Furthermore, the specifications on both receiver and transmitter of the TS-520 were upgraded 6 months ago to basically the same as the TS-820 – see sheet #760750SB. Of course, the new TS-520S has a number of changes, making the article somewhat obsolete.

L. Schulman WB9WIC
Northbrook IL

Here are a few corrections and additions for my article entitled, "Baudot to ASCII Converter," which was published in the September, 1977, issue.

CORRECTIONS

Two of the ICs shown on the main schematic have errors in pin numbering. On U13, the 1702, pins 12, 13, 15, 22, and 23 should all go to +5 volts. Only pin 14 is grounded. The PC board is correct. On U18, the 74161, the pin with the small circle on the lower edge of the symbol box should be labeled pin 1. The other numbers on the bottom edge are correct, but refer to pins to the right of each number. Note that there is no connection to pin 11.

UART STRAPPING

The connections to the two UARTs (Table 1) were omitted from the schematic, but are included on the board. No additional wiring is required on the board.

CLOCK GENERATOR MODIFICATION

There has occasionally been trouble with U25 appearing to divide improperly. This can easily be corrected by breaking the line that goes from pin 2 of U25 to pin 15 of U24 and reconnecting it to pin 9 of U24. The effect is to invert the input signal to U25. On the PC board, the modification is simple, because the trace goes right by pin 9. This can be done on any converter, even if the clock already works correctly.

IMPROVED TAPE READER CONTROL

When transmitting Baudot code at 45 baud, the tape control shown in Fig. 9 of the article could only be operated at 3.7 characters per second, in order to allow time for the converter to insert shift characters when required. In addition, the transmitted Baudot was quite uneven.

One simple change will produce an amazing improvement. Simply disconnect the left side of the 500k pot from the +5 volts and connect it instead to the TBMT output of the Baudot UART (pin 22 of U11). Then the control can be operated at 5.5 characters per second with a tape containing only letters and spaces. TBMT will put out a steady 4.5 volts and the 555 timer will operate normally. However, when a tape containing both figures and letters is run through the reader, TBMT will go to 0 volts whenever a shift character is being inserted in the Baudot data stream. The tape control will pause until the internal buffers of the UARTs become empty and then will resume its normal timing cycle.

With this modification, the transmitted Baudot appears to be smooth and even. Note that the theoretical maximum character rate for 45 baud code with one start bit, five data bits, and two stop bits is 5.7 characters per second, so that the system will now operate at essentially the maximum speed.

J. Gary Mills VE4CM
Winnepeg, Manitoba
Canada

Pin	Label	Name	ASCII	Baudot
16	SWE	Status word enable	0	0
21	XR	External reset	0	0
34	CS	Control strobe	+5	+5
35	NP	No parity	0	+5
36	TSB	Two stop bits	+5	+5
37	NB2	Number of bits	+5	0
38	NB1	per character	0	0
39	EPS	Even parity	+5	0

Table 1.

Ham Help

I have a Clegg FM-27A transceiver which I am trying to modify to transmit over the entire 146-148 MHz repeater subband. The transmitter uses a 116 MHz oscillator, which is fed into an FET mixer with a signal around 30 MHz to yield 146 MHz. I had attempted to add a 117 MHz oscillator, of the same design as the 116 MHz oscillator, with a switch to kill power to the undesired oscillator, but the added circuitry loads the system so badly that it kills all output from the transmitter on either band segment. When the new oscillator is disconnected, the transmitter works normally. Does anyone know what I can do to cure the problem? The people at Clegg refused to give me any information. Being relatively new, I do not have a large collection of magazine back issues which may have covered the FM-27A. Here in Lancaster County, the only local open repeater is above 147 MHz. The nearest 146 MHz open repeater is 40 miles away.

Philip E. Galasso WB3EZA
45 Lincoln Avenue
Ephrata PA 17522

I would like to hear from anyone who has easily and successfully converted a Radio Shack Weather Deskcube (#12-181) or similar weather receiver to use as a 2 meter repeater receiver.

Jim Weitzman K3JW
11417 Hounds Way
Rockville MD 20852

I have a preselector Q multiplier or a front end converter by Radio Manufacture Engineer, Inc., Peoria IL. It's model HF 10-20, serial number HR-168, and uses one each of tube types 5Y3, VR150-30, 6AG5, and 6J6. I have searched the San Diego libraries with no luck. Can one your readers identify this and furnish me a schematic? I would like to rebuild it as it originally was.

George N. Andrews WA6DWV
6642 Birchwood St.
San Diego CA 92120

I recently purchased a GE Pacer transmitter/receiver, EG43SA6, FCC type ES27A. Were there any articles on this unit for conversion? NBFM or WBFM? Any information available would be very much appreciated – will pay for any schematics or back issues if available.

John Wora K2KFG
S-4907 Clifton Parkway
Hamburg NY 14075

Help!

What good is a 2 meter rig going to do in my car if I can't check out my electrical system? Can anyone help find a function or selection switch for my Knight Kit model KG-375A auto analyzer? (Radio Shack doesn't carry Knight kit parts.)

Any help would be appreciated.

Eugene E. Binau WA5LAE
308 Debbie Lane
Tecumseh OK 74873

James M. Willis WA5TFK
12 Tamar Drive
Texarkana TX 75503

Versatile Transistor Tester

—*save expensive devices*

Many of the new transistor testers appearing on the market today provide two unique features:

1. Random lead connection.
2. Identification of transistor leads.

With these features, the test procedure is greatly simplified, and the person performing the test is assured that the test leads are *always* connected correctly to the transistor under test. The advantages become immediately obvious when you are culling through a large assortment of surplus transistors or when performing in-circuit tests on a crowded circuit board where it is often difficult to identify the leads on a transistor.

It is the purpose of this article to show how these features can be incorporated into your present tester, at a very low cost, without having to modify your tester in any way. In fact, this is an outboard accessory, which is connected between the tester and the transistor.

The principle on which this circuit operates is simple. There are only six possible ways in which the leads can be arranged on the base of a transistor. See Fig. 1.

By the simple expedient of interposing a 3-pole, 6-position switch between the test leads and the transistor, it is possible to present to the input of the tester, one by one, all six of the possible lead arrangements. The circuit for this switch is shown in Fig. 2.

Up to this point we have accomplished the goal of random lead connection. To identify the transistor leads, it is necessary to color code the wires from the switch to the transistor. Next, prepare a chart which correlates the switch position with the colored wires and their corresponding connections to the input terminals of the testers. See Table 1.

For convenience, this chart can be attached to the box in which the switch is mounted, or it can be affixed to the transistor tester itself. One thing which should be mentioned is that the leads from the switch to the input of the tester should be connected exactly as shown on the schematic in Fig. 2. If these leads are changed around, you will still retain the random lead connection feature, but you will no longer be able to identify the transistor leads.

When using this switch for the first time, you will notice that there is more than one position which will give an up-scale reading on the meter of your tester. This presents no particular problem in the interpretation of the test results, once you understand why this happens.

To illustrate this, select a good transistor on which you can positively identify the leads, and connect it to your tester. After you have made the initial adjustments on your tester, press the gain button and observe the beta. Now reverse the emitter and collector leads on the transistor, and repeat the test.

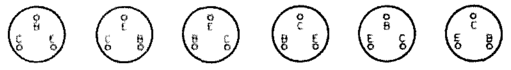

Fig. 1.

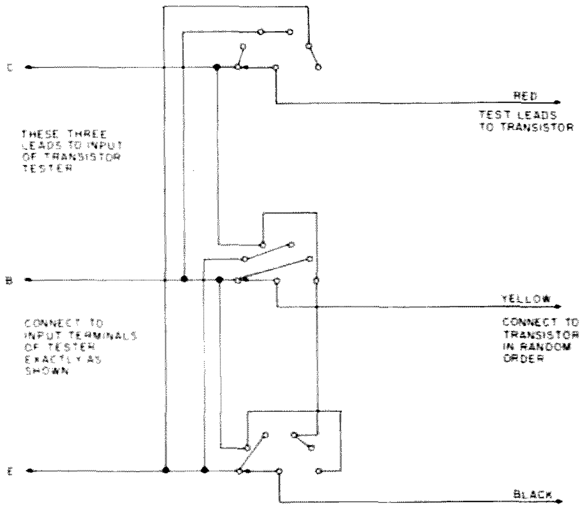

Fig. 2. 3-pole, 6-position switch (Mallory 3236J).

Switch position	Collector	Base	Emitter
#1	red	yellow	black
#2	red	black	yellow
#3	yellow	red	black
#4	black	red	yellow
#5	black	yellow	red
#6	yellow	black	red

Table 1.

You should observe that the transistor still has a forward gain, but the beta will be lower than that obtained previously. Why does this occur?

Actually, nothing strange or contrary to the laws of transistor physics has occurred here. The emitter and collector of any transistor are made of the same type of material and, from a theoretical standpoint at least, we could say that the designation of the emitter and collector are purely arbitrary.

In the real world of transistor design, however, the physical structure of the emitter and collector are different. These differences are dictated by design considerations such as input-output capacitance, collector heat dissipation, and forward gain requirements. From a practical standpoint, all of these factors add up to one thing when testing a transistor. The connection of the emitter and collector test leads which give the highest beta reading on the meter positively identifies the emitter and collector leads on the transistor.

On some testers, a collector-base reversal will give an indication on the meter during the initial setup and adjustment of the tester, but the transistor will not have any forward gain. In this case, the emitter-base junction is forward biased, as it should be, and it is this current that you see indicated on the meter in the first part of the test. The collector circuit, however, is also forward biased, and, therefore, the transistor will not have any forward gain.

I would like to see a more enterprising person adapt the features of this switch to a digital circuit for true no-hands operation. The biggest problem to overcome would be the tendency of such a circuit to lock on to a collector-emitter reversal and give a false indication. ■

New Products

from page 15

The Logitronics Copy One just might be the ideal first purchase for prospective amateurs — one that would never become obsolete regardless of the class of license held and the number of years on the air. And anyone who has let their CW operating slip could be pleasantly surprised by adding a Copy One to the shack. The hold of the unit is subtle and requires a while to capture you, but once it does, the Copy One should become a valued addition to the shack of anyone who operates CW.

Priced at $89.95, the Copy One is available through dealers. For further information, write *Logitronics, 3135 North Cole Road, Boise ID 83704.*

ST-100 WIRE CUT AND STRIP TOOL FOR WIRE-WRAPPING

Featuring a revolutionary new concept for easy and clean stripping of wires for wire-wrapping, electronic, and appliance applications, the ST-100 strips without nicking and automatically generates the proper strip length for wire-wrapping. Biomechanically designed for maximum efficiency, its slim design makes it ideal for storing in pocket, belt holster, or tool kit.

The ST-100 is easy to operate. Simply place wires (up to 4) in stripping slot with ends extended beyond cutter blades, press tool, and pull. Wire is cut and stripped to proper "wire-wrapping" length.

Hardened steel cutting blades and sturdy construction insure long life. The stripping blade is easily replaceable. The ST-100 is a handy tool for production field work. It is available for wire sizes from 20 to 30 AWG (0, 8-0, 25mm). *O.K. Machine and Tool Corporation, 3455 Conner Street, Bronx NY 10475 USA.*

NEW MAX-100 100 MHZ COUNTER FROM CSC

Continental Specialties Corporation's MAX-100 delivers a continuous 8-digit accuracy 8-digit display from 20 Hz to a guaranteed 100 MHz. The crystal-controlled timebase delivers 3 ppm accuracy, and the counter updates every second. The counter input is preamplified to work with as little as 30 mV of signal, and is diode protected up to 200 volts.

Although only 1.75" tall, the MAX-100 features big, bright .6" digits. No range switch is necessary, as the least significant digit always represents 1 Hz. Leading zeroes are blanked. And overrange signals cause the most significant digit to flash. The MAX-100 can be operated on internal alkaline or nicad AA cells, or from automotive or wall power using charger/eliminators. All 8 digits flash to indicate low battery operation, which permits extended battery life when batteries are low.

The input impedance of MAX-100 is a full 1 megohm, shunted by 56 pF. Ac sine wave sensitivity is rated at 30 mV rms from 10 Hz to 50 MHz, 100 mV rms to 80 MHz, 300 mV rms above.

The MAX-100 is accurate enough for most professional field service applications, and, with a suggested price of $134.95, it's economical enough for personal or educational use. A number of accessories are available, including battery charger/eliminators, rf tapoffs, a whip antenna, and a carrying case.

For further information, contact *Continental Specialties Corporation, 44 Kendall Street, New Haven CT 06509; (203)-624-3103, TWX (710)-465-1227.*

DATA TECH INTRODUCES U.S.A. MANUFACTURED $39.00 3½ DIGIT DPM

The Model 73 is a bipolar, 3½ digit, dc-powered, LED display panel meter with a price of $39.00. Also available are choices of various ac-powered units. The Model 73 features .05% accuracy, and is available in four full scale ranges: 200 mV, 2 V, 20 V and 200 V.

The LED display has been designed for maximum visibility — a crisp, clear display that can be viewed from a wide angle and still be easily read. A special lens is utilized to reduce glare without reducing the brilliance. Applications include measurement, control, and data acquisition for the scientific, industrial, and medical fields.

Basic specifications are .05% accuracy, 50 ppm temperature coefficient, .43" LEDs with extra wide viewing angle, 80 dB common mode rejection ratio, and overvoltage protection. Overload is indicated by blinking the display. The unit fits 3.17" to 3.20" W x 1.77" to 1.79" H cut-out with an optional version for the 9.25 x 4.55 cm DIN standard cut-out at no additional cost. The Model 73 is the only low-cost DPM on the market backed up by an extensive quality control program and over 100 hours of powered temperature cycled burn-ins. *Data Tech, 2700 South Fairview, Santa Ana CA 92704; (714) 546-7160, TWX: (910) 595-1570.*

FULL WAVE BRIDGE RECTIFIERS HANDLE 400 AMP SURGES

Motorola's new MDA2500 series of full wave bridge rectifiers require only one inch square mounting surfaces to produce 25 A continuous, 400 A surge performance. Available in voltage ratings from 50 to 400 V, the series derives its economy from high assembly yields, the result of mounting four pretested MR2500 type cells on an electrically isolated aluminum heat sink.

The thermally conductive case is intended for single-bolt heat sink mounting, and features terminals suitable for either soldering or ¼" slip-on connectors.

Available from distributors, unit prices in 100 piece quantities are about $2.00. *Motorola Semiconductor Products, Inc., P.O. Box 20912, Phoenix AZ 85036; phone (602)-244-6900.*

A GREAT WAY TO HOLD YOUR PANTS UP

A giant call letter belt buckle cast in solid bronze or sterling silver not only helps to hold your pants up, but also looks terrific and is a great conversational ice-breaker. The Colorado Silver Company individually cast each buckle in a manner that insures that no two are exactly alike. Engraved with your call letters, they make great gifts for yourself or others.

Each buckle is engraved with care and backed with an unconditional guarantee that if it ever fails, it will be repaired or replaced free of charge. The cast bronze buckle is only $12.95; the sterling silver buckle costs $65.00 (for a little more, go first class!). Please add $1.00 per buckle for postage and handling. *Colorado Silver Company, P.O. 1755, Aspen CO 81611.*

First class way to hold up your pants.

James P. Berry K4FFW
512 Guilford Road
Rock Hill SC 29733

Autopatch Digit Suppressor

—avoid huge phone bills!

Since our local club is small and operates with rather limited funds, we were slow in getting a repeater on the air to serve our area. After the repeater was on the air for several years, the club members were anxious to have an autopatch, but it was only after we received pledges to pay the phone bill that we felt the club could afford this luxury. So, it was with great anticipation that we began installing our newly purchased autopatch.

To our dismay, within an hour after we began installing and adjusting the patch, malicious interference began to come in through the repeater. Someone with a touchtone pad was turning the patch on and just leaving it on and was turning the patch off when someone would try to use it. This continued incessantly for several weeks.

We could have lived with these problems, as the patch had an automatic disconnect which would turn the patch off after a preset time if there was no one with a tone pad monitoring. However, our "friend" began turning the patch on, dialing the operator, and then disappearing. We realized it wouldn't take much of that before the local telephone company (independent) would take a disliking to our operation. It was apparent, also, that our "friend" could begin dialing long distance numbers and run up a nice telephone bill for the club. The malicious incidents became so frequent that it appeared that we would have to remove the patch from service.

We knew that devices were available which prevent dialing the operator or long distance, but this option was beyond our means. None of our members had any digital design experience, so I decided to attack the problem with my limited experience with digital circuits. The circuits which appear in Figs. 1 and 2 were the result.

It may not be the cleverest or best way to do the trick, but it is simple, straightforward, uses common TTL devices (as they're the only ones I knew anything about), and works. If a one or a zero is dialed as the first digit, the patch is automatically disconnected. This prevents dialing the operator, direct dial long distance, and directory assistance (which is a toll call now).

Circuit Description

Audio from the speaker terminals of the repeater's receiver, raised to a higher impedance by T1, passes through the voltage divider-limiter network composed of R2, R3, R4, D1, and D2 and is fed through C1 to the seven NE567 tone decoders, U1 through U7. Pin 8 of the decoders is held high by +5 volts applied through R7. When the decoder is activated by the proper tone, pin 8 is grounded, producing a low on the corresponding bus.

The normally high outputs of the decoders are inverted to lows by U26 through U32. This results in a low on both inputs of all of the digit select NAND gates, U8 through U19, producing a high on their outputs.

The normally high outputs of the * and # NAND gates, U16 and U17, are applied to the inputs of U20, producing a low output, which is inverted to a high and applied to the preset of U24. When a low is placed on the preset pin of U24, the low (grounded) at the data input of U24 is transferred to the $\bar{Q}$ output, which places a high on the Q output. This will be the state of U24 from the preset received when the patch was last turned off.

Unless the tones for a one or zero are being received, the output of U21 will be low, assuring a high on the output of U23 and the patch-inhibit terminal of the autopatch. A low applied to the patch-inhibit terminal will turn off the patch.

When the tones which comprise a * (941 Hz and 1209 Hz) are received (to activate the patch), the outputs of those two decoders go low and are inverted to highs. These highs, applied to the inputs of U16, give a low out, producing a high output for U20, which is inverted to a low on the preset pin of U24. This low at the preset of U24

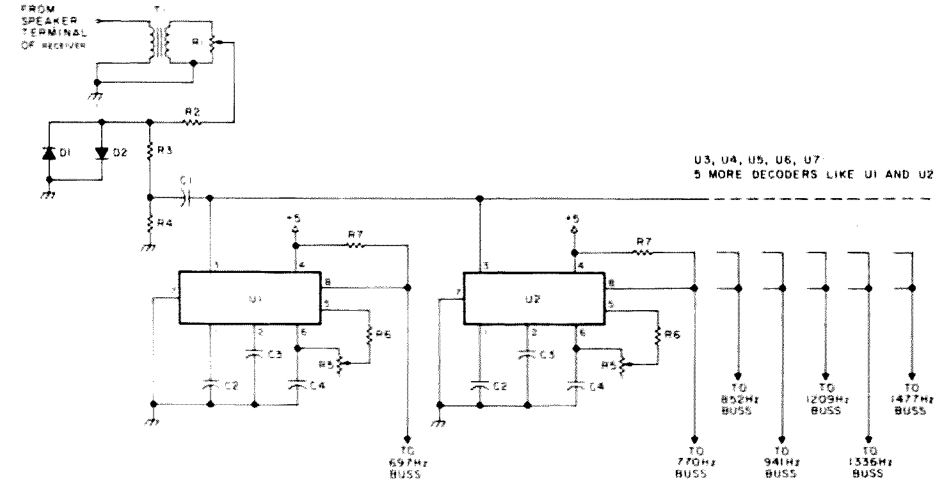

Fig. 1.

places a high on the Q output and the inputs of U22 and U23. This preset state of U24 will remain until a high is received at the clock input.

At this time the patch has been activated by the * tones, and, if the tones for either a one or zero are now received, the output of U18 or U19 will place a low on the input of U21. The output of U21 will be high, and, when this high is applied to the input of U23, along with the high from U24, the output of U23 (patch-inhibit) will go low, turning off the patch.

If, however, the first tones received after activating the patch are for a 2, 3, 4, 5, 6, 7, 8, or 9, then one of the U8 through U15 NAND gates will have a low output, which places a low on one of the inputs to the 8-input NAND, U25. A low input to U25 gives a high out, which is inverted by U33 to a low. This low applied to the input of U22 gives a high out to the clock input of U24, reversing the logic on the Q and $\bar{Q}$ outputs, leaving a low on the Q output. This results in a high out of U23 to the patch-disable terminal of the patch.

The state of U25 will not change (locking a high on the output of U23), unless the clock input returns to a low and then goes high again. This cannot happen unless U24 is preset again by a low on the preset pin, because the low on the Q output is applied to the input of U22, locking a high on the clock input of U24. The next digit received cannot affect the state of U24, and, since there is a low latched on the input of U23, a one or zero can now be received without causing a low at U23's output. When the # tones are received to disconnect the patch, a low on the preset of U24 results, returning U24 to its original state.

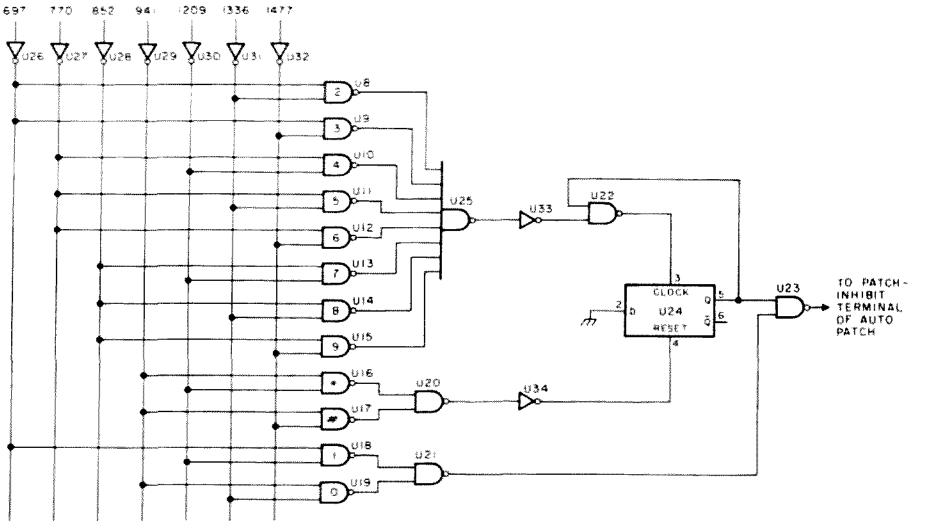

Fig. 2.

Adjustments

Each of the NE567 tone decoders was tuned to the proper frequency by connecting a frequency counter to pin 5 of the NE567s and adjusting R5 until the counter showed the proper frequency for that decoder. Then R1 was adjusted so that the NE567s would decode consistently, with the volume control of the repeater's receiver set in its normal operating position.

This device has considerably reduced the anxiety of the repeater committee and monitors and was well worth the less than $20 it cost. ■

Parts List

U1 through U7	NE567
C1	0.47 uF
C2	10 uF
C3	1 uF
C4	.1 uF
D1, 2	1N914
R1	10k trimpot
R2	4.7k
R3, 4, 7	2.2k
R5	10k, 10 turn pot
R6	5k
T1	8 Ω, 2k miniature audio
U8 through 03	¼ 7400
U24	½ 7474
U25	7430
U26 through U34	1/6 7404

Parts Needed

Resistors (¼ W)	
4.7k	
2.2k	
5k	
Capacitors	
.47 uF	1
.1 uF	7
1 uF	7
10 uF	7
ICs	
NE567	7
7400	4
7404	2
7430	1
7474	1
Trimpots	
10k	1
10k, 10 turn	7
Diodes	
1N914	2
Transformer	
8 Ω, 2k audio	1

EDITORIAL BY WAYNE GREEN

from page 103

of *73* study materials for the classes. This is not a commercial pitch, just a recognition of the work of outstanding clubs.

SEND CARD, GET LIFE

If you had any idea of how expectantly some advertisers wait for news from us that you would like to have their catalog or literature, you'd never let a *73 Magazine* get onto your shelf without first sending in the Reader Service card.

Just inside the back cover of each issue of *73* is a page with two cards on it. You are supposed to tear out one of these cards, circle the numbers which are keyed to the ads, and mail it in. No one will be upset if you also use the card for a subscription or for ordering books, tapes, etc.

In order to further impress upon you the importance of consummating this required bit of reader duty, we are going to have a drawing each month from the cards returned. The winner will get a life subscription to *73*. With this bounty available, perhaps your subconscious mind will work this over and keep you from getting to sleep before you've filled out the card and returned it.

The advertisers put a lot of store in reader reply response, so propitiate them . . . circle away . . . mail.

NOVEMBER WINNER

Did you miss the "Electronics Study Guide" in our November issue? If you did, you also missed the best article of the month, according to our readers. As the winner of our November popularity poll, Ken Wilson of St. Louis receives from us a bonus check for $100, in addition to his normal article payment. A typical letter praising Ken's piece can be found in this month's "Letters" column, but remember that such missives are not counted as votes. To cast a ballot for your favorite article, simply fill in the appropriate blank on our Reader Service card (after you circle your requests for info from advertisers) and send it in. You'll be doing yourself *and* your favorite author a favor.

James C. Chapel W9HDA
2349 Wiggins Ave.
Springfield IL 62704

Surplus Adventures

—pound foolish!

Over two years ago, a friend at work told me about getting on the U.S. Government surplus sales list. He was even kind enough to give me the back sheet from one of his many catalogs. I filled out the form and waited.

After about three weeks, a form arrived, along with an accompanying booklet of explanation. The range of surplus is amazing – from dental chairs to typewriters, from army jeeps to magnetrons. After selecting my area of interest – mainly electronics-related equipment – and also selecting geographic areas of interest, I returned the form. It wasn't long before catalogs from Ogden, Memphis, and Columbus started arriving. Each lists several hundred items or groups of items available at various military or defense storage areas within that Defense Property Disposal Region. For example, Columbus takes in some of the east, most of the north central states, and even some of the near west. Keep in mind, in filling out the form, that if you find an item of interest, you bid on it, and you win, you must pick it up yourself or hire someone to pick it up. The government does not ship or arrange shipping.

The bid list, besides giving the location and general description of the equipment, also indicates the condition (good, fair, poor, used, or new, and repairs needed or parts missing if applicable). The condition can drastically influence the bid price, making that point an important consideration.

After receiving a few dozen pamphlets or catalogs describing the items of interest, mainly a good AM signal generator, I decided to get my feet wet. I proceeded to bid on a signal generator in Kinross, Michigan. I also bid on a unit in Omaha, Nebraska. As it turned out, the government sends to all bidders, whether high or low, a list of all winning bidders' names and addresses, and the amount they bid. From this list, I found out I missed by $10 in Michigan and was $30 low at Omaha. This list is very helpful even if you lose, since it gives a good indication of the going price of a unit at that location.

After several additional bids without any success, the unit I really wanted appeared at McConnell Air Force Base – an ASM-44A in good condition and packed. Having had the going prices at several similar sales, I added about $20, plus $1 to be just over an even amount.

A week after the bid opening, my notice of award arrived, along with the bill for the remainder of the amount due. With the bid form, it is necessary to include at least a 20% deposit of the total amount bid. I quickly sent the check back to Columbus to insure my purchase of the "new" signal generator.

The government gives successful bidders one month after the award to pick up the equipment. Since McConnell is at Wichita, I came up with the idea of having a friend of a friend pick up the generator and take it to the airport for air freight shipment. Unfortunately, the friend's friend had changed jobs and left town.

Next came an ad in the mail about a directory of packers and shippers at major bases and storage areas. Away went my check, and back came the book by return mail. The directory didn't tell much more than the yellow pages in the Wichita phone book. It was obvious that it would require several phone calls, and even then it was questionable what I would get in the way of service.

Out came the road maps to see how I would drive to Wichita. It calculated out to 450 miles each way, but it was all interstate or toll road. That would mean at least two days off work, plus a night's lodging and at least 4 or 5 meals on the road, skipping a meal or two. That cost, with the driving expense or even by renting a car, didn't look too appealing. Time was growing short, with only a week and a half before the generator had to be picked up.

A call to the local airline showed there were no connecting flights that would get me to Wichita from Springfield and back all in the same day. Another call to another airline discovered a morning flight from St. Louis to Wichita and a return flight back to St. Louis that late afternoon. Everything looked fine, until I checked for reservations on the only day I could go, a Wednesday. I could get there but was wait listed on the return, the only flight at that time back to St. Louis. Well, I picked up the tickets, wait listed or not, and prepared to get back somehow.

I told the boss I was taking off a day on vacation that Wednesday, and proceeded to study maps of Wichita. The airport is on the southwest side, and the base is on the southeast side about 18 miles from the airport. About the only thing to do would be to rent a car when I got to Wichita. A cab (with the waiting time) would be astronomical.

The day arrived and I drove to St. Louis. Everything looked fine until it started to snow. The schedule was such that I had about four and one half hours between scheduled arrival and scheduled departure. Taking no suitcase and only one day officially off work, I began to perspire as the snow continued to come down.

The plane arrived, and about that time the snow let up. Before long we were airborne, and I began to see the new signal generator at home

in the lab. Arrival was pretty much on time. Having no baggage, I hastily proceeded to the rental car agencies. One agency had no line and the best rates, so I quickly found out why. They also had no cars available. A quick review of the other agencies showed only reserved cars available. With only $19.47 in my pocket, I knew a cab wouldn't be possible. Again, that warm feeling. Just then the attendant at the first rental agency called. me. She unexpectedly had had a car turned in. I was in business.

The time to the base was only about twenty-five minutes. Upon entering the base, I asked the security guard the directions to property disposal. He sent me to a large, impressive-looking administrative building. When I told an officer in the first office what I was looking for, he scratched his head and informed me I was on the wrong end of the base. The 20¢ per mile figures started clicking in my mind. However, he drew me a map and away I went with the rental odometer clicking.

Everything went fine until I ended up in the officers' housing project with a built-in school. Next, back to the nearest guard house, where I was informed I should have turned right where the quickly-made map went straight. Within eight minutes and another dollar on the rental car, I found the disposal center, an old quonset-type building way over on the far corner of the base. All was fine now, except everyone in the three-person office was out to lunch. After about 10 minutes, everyone returned. The paperwork was completed, and I was taken to an adjoining building where typewriters, engine parts, and tools lay along the aisle. Here it was at last, the signal generator. A quick examination, and it looked like everything was in order. The property disposal official helped me load the generator (in its huge case) into the car. It was so large and heavy with the case that it wouldn't fit in the trunk. The only place it would fit was on the front seat next to me. Well, mission nearly accomplished if I could get it and myself on the plane that afternoon.

Back at the airport with plenty of time to spare, I decided to look thoroughly at the unit. It looked in reasonably good physical shape, except for the tag that stated "repairs required, repairable." After a look through the tech manuals, it looked like an interesting piece of equipment, even if it was 17 years old and in need of repair.

Since it was well past lunch, I decided that I certainly needed something to eat and time to plan the next step, getting the generator on the plane.

After a tasty sandwich and pie for dessert, I decided that the first approach would be to check the generator as baggage. After all, I didn't have a suitcase and the unit was in a sturdy shipping case. The bid description had stated 100 pounds, but that had to be wrong. Besides, maybe I could find an airline agent who didn't mind a little heavy baggage.

A redcap was found and tipped for his help in getting the unit to the check-in counter. A look at the scales showed, gulp, 100 pounds. After 10 minutes of "discussion" with the agent, he talked me into going air freight. He would even arrange to have it transported to the air freight building a half mile away. Over to the freight terminal for the paperwork to get it shipped. After supplying all the information, I was informed that it would be on my plane, assuming I got on.

After turning in the car, a check at the airline counter was made. There was no problem in my getting to Kansas City, but I still didn't have confirmation on the KC to St. Louis section. I decided to give it a try, knowing that my newly-acquired generator would make it even if I didn't. Fortunately, the KC section was well over-reserved and I was able to stay on to St. Louis.

After arriving there, it was over to the freight office to claim my "prize." The young lady there informed me that my package was not on the flight and there of course were no more flights that evening. I had no choice but to arrange transfer upon arrival to the local airline serving my home city, and drive back home with an empty trunk.

The local air freight office was to call Thursday upon arrival of the box. Since I was away on business Thursday, I rushed to work on Friday to check my messages, but no call from the terminal could be found. I proceeded to call them, but no grey box, as I fondly called it, had arrived. At that point I was ready to collect the insurance on the box, hoping it had been lost. Just before noon I called again, and the grey box had "just arrived." After parting with some more cash, the grey box was finally mine.

Most of Saturday and Sunday were spent checking out, repairing, and calibrating the new purchase. As it turned out, the repair was very minor — a shaft on the amplifier tuning capacitor had slipped and it was a relatively simple and quick repair. Calibration, cleanup, and just plain looking took most of the time.

After all my adventures, you may ask, "Was it worth it?" After totaling up all my bills, including redcap, rental car, gasoline, parking, and air freight, it still came out to $150 less than the commercial dealer's price (FOB his location). Right now, I am bidding on a dual trace oscilloscope, but this time it is close enough that I can drive there and back in one day, hopefully. The letter of award just came. I'm off to Omaha! ■

Ham Help

I've found a friend who must use a "talk-board." Some people simply cannot follow as she points out one letter at a time. She wants an LED version.

It is possible to use a numeric character display in a passable alphabet display. Do you have someone among your readers who might take a handful of ICs and slap together a simple readout?

I believe a two-digit code would be possible, if a character-by-character approach were used. If she sketched each character, bar-by-bar, a simpler, but tedious approach would do — light numbered bars, then advance to next character.

If anyone is interested, I'll send his name to her and she will correspond.

Bob Russ W9NWV
C.L.H. Home
Box 98
Walworth WI 53184

Help! When you got me interested in RTTY, you didn't tell me that most of the machines were built before I was. Would you please help me locate a pair of 323B tubes and an NE42 tube for my Model 15 power supply? Also, "RTTY SWLing" (*73*, Sept., 1977) was great, if you live in New Jersey. How about for the west coast? A good strong 60 wpm English news station might keep the XYL from taking an eight-pound sledgehammer to my green keys.

RTTY is really a lot of fun and my thanks to *73* for getting me started. There's not much entertainment here in the Mojave Desert and waiting for the 20 mule team to bring the wire and generator to power a RTTY unit is great fun.

T. A. Nupp WA6WFK
13597 Gilbert St.
N. Edwards CA 93523

I need schematics for an Ameco 2 meter converter, model CB-2, and Tecraft TR-20/144, PTR-2, CC-144.

Bill Mollenhauer WA2FFZ
Box 3, RD 1
Glassboro NJ 08028

Help! I need a schematic of an Eico Model 425 oscilloscope. Manufacturer hasn't been able to help.

David R. Wilks WB5ZRJ
2004 Lakehill Lane
Plano TX 75023

I need an operator's and service manual and schematic for an Eico 753 Tri-Band SSB/AM/CW transceiver. Can anyone help?!

Tony Renna
PO Box 391
Ft. Jones CA 96032

TS-700A Calibrator

—10 kHz steps, no less!

David F. Miller K9POX
7462 Lawler Avenue
Niles IL 60648

Owning a radio like the Kenwood TS-700A with full two meter coverage and all mode operation brings a new pleasure and convenience to operation on that band. The VFO rivals a crystal in its stability and the operating ease of the radio leaves little to be desired . . . except for the following. The TS-700A utilizes a 10 MHz crystal for calibration purposes; the crystal oscillator is then divided by ten to 1 MHz, and then to 100 kHz by the action of two TTL 7490 ICs in series. The system works well and puts a great deal of circuitry into a very small space, but why stop there? Since most repeater inputs and outputs are not on 100 kHz increments, but rather on 10 kHz points *within* these 100 kHz segments, why not add just one more 7490 decade divider IC and end up with calibration points right on the repeater input/output frequencies? It isn't all that difficult to accomplish and will pay dividends for many QSOs to come! Even if you're a dyed-in-the-wool SSB advocate, the vastly increased number of calibration points offers a distinct advantage in knowing exactly where in the band you are at all times. The modification to be described has been made in two different TS-700As, mine and that of K9GBG, and the results have proven to be more than worth the effort involved.

Because of the compactness of the circuitry in this radio, the approach used was perhaps a bit unorthodox, but it ended up looking very neat and the operation is FB. Rather than adding another circuit board (which could be located directly in back of the calibration board), I chose to make it easy on myself and simply "piggy-backed" the additional 7490 IC directly on top of the present 1 MHz to 100 kHz divider IC designated as Q5 on the marker unit board (calibrator board) No. X50-1280-00. The five ground connections on the new IC, which I call Q6, are carefully soldered directly to the corresponding pins on Q5 (pins 2, 3, 6, 7, and 10), giving the new IC (Q6) plenty of mechanical support. The Vcc (+5 V dc) is also picked up from the "host" IC (Q5, pin 5) using a steady hand, low wattage iron with very fine tip, and as little time on the IC pins as possible. Pins 4, 8, 9, and 13 on the new Q6 are not used and should be clipped off at the point where they widen out near the body of the IC. This leaves but four more active pins to be tied down, and they should be bent straight out, 90° from their original position, at the point where they widen out. Of these four remaining pins,

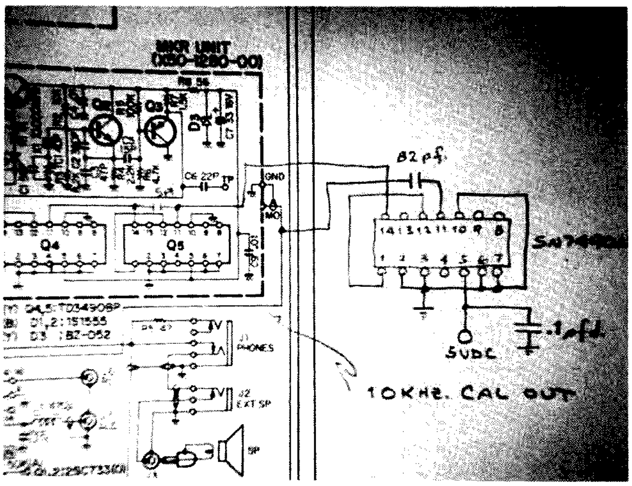

Addition of 7490N IC Q6 to TS-700A Operating Manual.

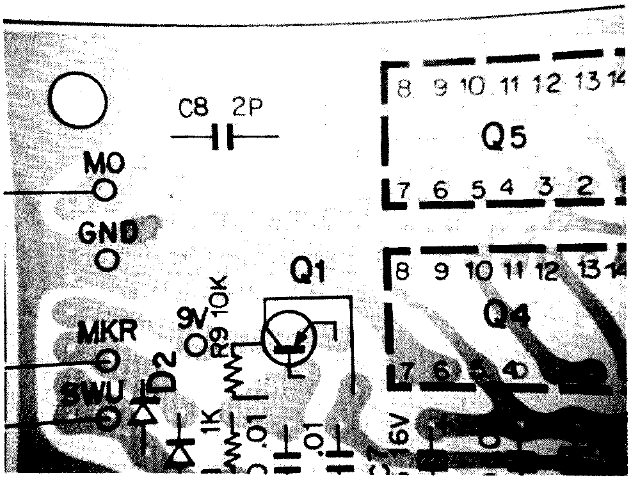

Calibrator board foil layout (bottom view) from TS-700A Service Manual before *modification.*

1 and 12 are easy – simply run a short length of hookup wire between them and nothing else. We now arrive at the "input," pin 14, and the "output," pin 11, of Q6.

Everything up to this point can be accomplished merely by removing the bottom chassis cover from the TS-700A, but now we must take out the four screws that hold the calibrator board to the chassis bottom frame and turn the board over, carefully. First, remove the 2 pF marker output coupling capacitor C8. Carefully score the printed circuit board foil as is self-explained in the circuit board before and after photos, and remove the foil between the pads. I've found that an X-Acto knife works well for this sort of surgery; heating the foil with an iron after scoring will help to give you a clean liftoff. The output of Q5 is now isolated and can be rerouted to pin 14 (input) of new Q6 using a short piece of hookup wire (see photos of completed modification). Another short length of hookup wire will connect pin 11 (output) of new Q6 to the output coupling capacitor, which should be increased in value to 82 pF (use a disc ceramic of at least 100 WV dc). This change puts the level of the new 10 kHz markers on a par with what you were used to before this modification. I also added another 0.1 uF @ 100 WV dc disc ceramic from +5 V dc to ground as close as possible to pin 5 of Q5 (on the foil side), inasmuch as TTL ICs do tend to generate quite a bit of noise and it is so easy to add this extra bit of insurance at this time.

That's all there is to it; the modification when done as shown will *not* affect the accuracy of the TS-700A internal calibrator as long as reasonable care has been exercised in handling the board and you've stayed away from the trimmer capacitor designated TC-1. Once you've put everything back together again, it's all over except for the fun! I think that you'll agree that, like the TS-700A itself, you'll wonder how you ever got along without it! High accuracy markers every 10 kHz makes an already exceptional transceiver even more so. ■

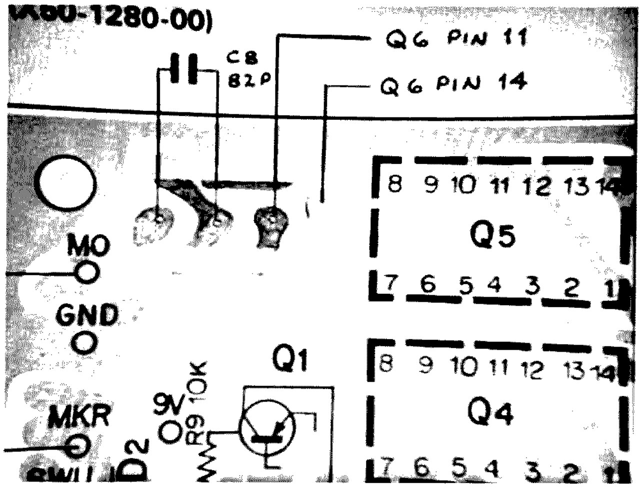

Calibrator board foil layout (bottom view) from TS-700A Service Manual after *modification.*

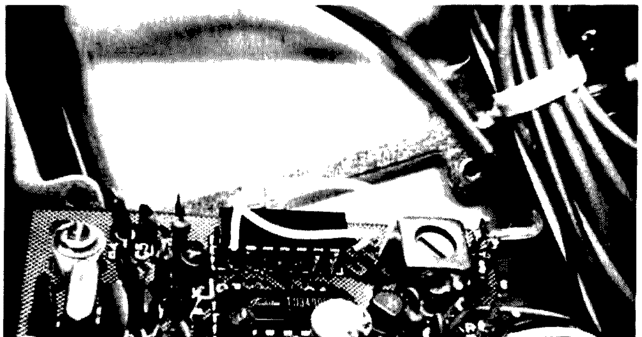

Front view photo of calibrator board after *modification.*

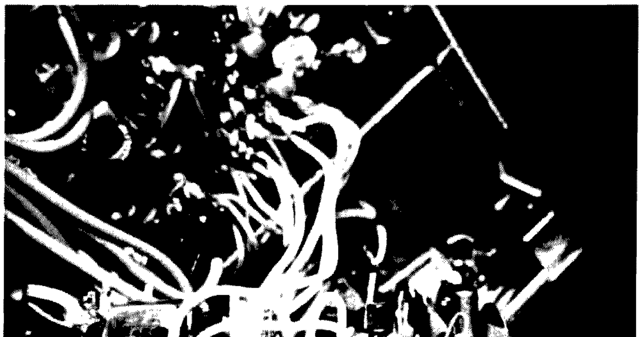

Rear view photo of calibrator board after *modification.*

CONTESTS

from page 23

Starts: 1500 GMT
Ends: 2200 GMT
Sunday, March 5
Starts: 1500 GMT
Ends: 2200 GMT

This will be the first U.S. SSTV contest. It has been organized by R. Brooks Kendall W1JKF, Dave Ingram K4TWJ, and Wayne Green W2NSD/1, *73 Magazine*.

BANDS:

All authorized frequencies within the 3.5, 7.0, 14.0, 21, and 28 MHz bands. Slow scan activity centers around the following frequencies: 3845, 7171, 14,230, 21,345, and 28,680 kHz. Outside the Americas, activity on 40 and 80 meters occurs lower in frequency.

EXCHANGE:

Exchange of pictures should include: callsigns, RST report, and contact number, starting with 001. The contact number is irrespective of the band(s) used. Note: FCC rules require SSB/CW exchange of callsigns by U.S. stations. Do not include contact number.

SCORING:

Score one (1) point per contact on 3.5, 14.0, 21.0 MHz bands, and five (5) points per contact on 7.0 and 28.0 MHz bands. There is a multiplier of ten (10) for each continent. Score eight (8) points for each country (ARRL list). Twenty (20) points for each contact worked through OSCAR. The same contact can only be worked once on each band.

LOGS:

Logs should contain: date and time of contact in GMT, band, callsign, report (RST) sent and received, contact number sent and received, points and multiplier per contact, final score, and your signature of the log. Logs must be postmarked no later than March 31, 1978. Send logs to: R. Brooks Kendall W1JKF, 10 Stocker St., Saugus MA 01906, or Dave Ingram K4TWJ, Eastwood Village 1201 So., Rt. 11, Box 499, Birmingham AL 35210.

A complimentary two-year subscription to *73 Magazine* and a certificate will be awarded to the top scorer. A certificate will be awarded to the top scorer for the most countries worked. Certificates will be awarded to those who have worked all call zones Z1/K1 through WØ/KØ. Awards and certificates will be presented at Dayton Hamvention. If winners cannot be present, awards and certificate will be mailed to their QTH. Contest results and photos will appear in *73 Magazine!*

Richard Dundon W7RG
25230 168 Pl. S.E.
Kent WA 98031

Keeping the Zap Out of the Shack

—protection for your two meter lightning rod

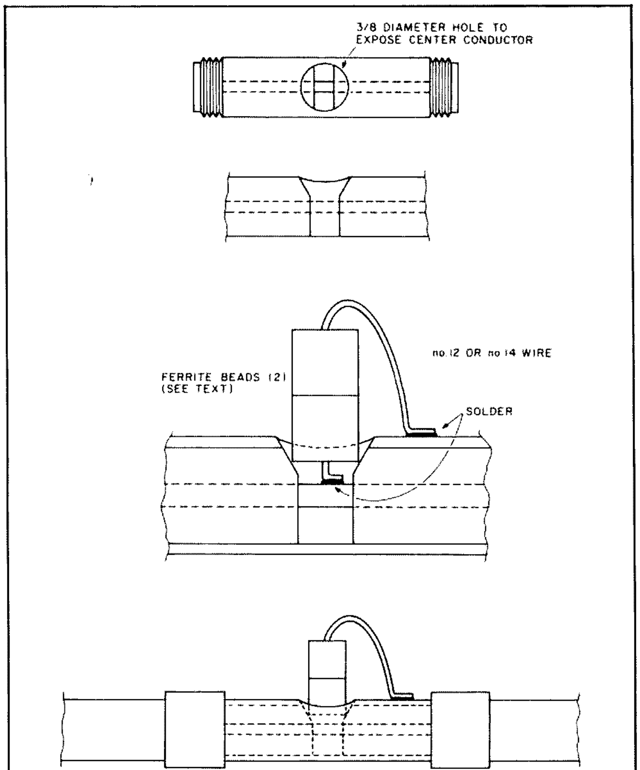

Fig. 1.

With the tremendous increase in 2 meter and up activity, many amateurs are upgrading their antenna systems and installing them higher and higher. A common installation found in all areas of the country is a single or multiple 2 meter beam array topped with a 2 meter moderate-gain vertical. Of course, this vertical inevitably becomes a very good lightning rod — that's where the trouble starts.

Most verticals are not mechanically or internally grounded like the plumber's delight beams. Therefore, any atmospheric static (i.e., rain, snow, or just good old lightning) has nowhere to go except down the center conductor of your coax, right into your nice multidollar rig, and zap!

If you ground all your antennas after each operating session, this article is not necessarily for you. But, if you want a low rf loss dc path to ground at all times, here's one approach which works and is easily constructed, at a minimum cost, with no insertion loss.

Simply put, use a couple of ferrite beads (the large ones) around a piece of no. 12 or no. 14 wire, and you have it. Amidon markets a series of 43-801, 73-801, and 64-801 beads which will handle a no. 12 wire through the center. The no. 43 material covers 50-200 MHz, no. 73 material covers 50 MHz and down, and no. 64 material covers 200 MHz and up.

Pick two beads to suit your frequency of operation. Drill a 3/8"-diameter hole in the center of a female coupling. Solder a piece of no. 12 (or no. 14) tinned copper to the exposed center conductor of the coupling. Slip the beads over the wire, down as close as possible to the center conductor of the coupling. Form the wire over the beads to the outer surface of the coupling, and solder to make a good ground connection.

Note that the "N"-type coupling usually has gaps between the insulators at each end of the coupling and allows easy access to the center conductor for soldering. However, if the insulator is solid and continuous, a little more effort will be required to expose the center conductor.

An alternative (I did not try it) could be to use a coaxial "tee," remove the male pin, and substitute a no. 12 wire with the beads slipped inside the male end.

I recommend a good braid ground to attach directly to the modified coupling (use a tubing clamp) to minimize any stray current flow through your rig.

In my installation, there was no identifiable change in power level or swr between the modified "ginderspatch" and an unmodified coupling. ■

H. Lukoff W3HT
506 Dreshertown Road
Fort Washington PA 19034

Painless Touchtone™ Adjustment

The existence of autopatch has brought about much joy. It has also brought some suffering. Listen on your favorite autopatch repeater any evening, and you will invariably find someone playing away at his touchtone™ pad, trying to get it to work. The testing of touchtone pads on the air can be extremely annoying to others monitoring or trying to use the repeater system. Asking another station on the air to judge whether your tones sound okay is, for all practical purposes, a worthless procedure. The human ear just can't provide the calibration that is needed.

Unfortunately, the successful operation of a touchtone pad depends on more than hooking it up correctly and getting audio tones out of it. Some autopatch repeaters feed the received audio tones directly into the telephone lines and do not regenerate the tones. This means that the received tones must meet the telephone system standards, and these are quite critical. Not only must the frequency of the tones be accurate, but the amplitude also has to be controlled. Since a range of tones from 697 Hz to 1477 Hz are transmitted, all must meet the same amplitude specifications. Therefore, the two tones transmitted must be closely balanced with respect to each other.

All FM transmitters use pre-emphasis in their modulation process. This means that the higher audio frequencies are accentuated more than the lower frequencies. To compensate for this at the receiver, de-emphasis is used to restore the audio to its original quality. Unfortunately, there is no firm pre-emphasis/de-emphasis standard in amateur service. In fact, manufacturers will vary the emphasis circuits to provide their own desired sound. You may notice that some manufacturers' radios can be identified by their distinctive sound. It is these circuits that can cause difficulty when hooking up a touchtone pad. Even though the high and low tones may be perfectly in balance when fed into the mike input, they won't be when radiated on the air.

Some repeater systems will retrieve the tones before the receiver de-emphasis circuits and some after. It is important to know what your autopatch repeater system requires. The Philadelphia-area repeater system, with which I am familiar, assumes balanced tones before the de-emphasis circuit. The specific requirements are for a deviation of 4 to 4.5 kHz, which satisfies the amplitude requirement, and for an unbalance of no more than 20% between the high and low tones. Thus, the two critical parameters requiring adjustment in a touchtone pad system are deviation, which sets the amplitude, and tone balance. The frequencies of the tones are usually accurately and stably generated and do not need adjustment for most LC or crystal-controlled oscillator touchtone pads. The frequencies on RC or other free-running-type oscillators should be checked.

The procedure which follows provides a means of making the necessary adjustments without tying up the repeater system.

A separate monitor receiver is required, in addition to your transmitter, and they are both to be tuned to the same simplex frequency. Locate the discriminator output of the receiver prior to the de-emphasis circuit. Be careful; some discriminator test points are made available

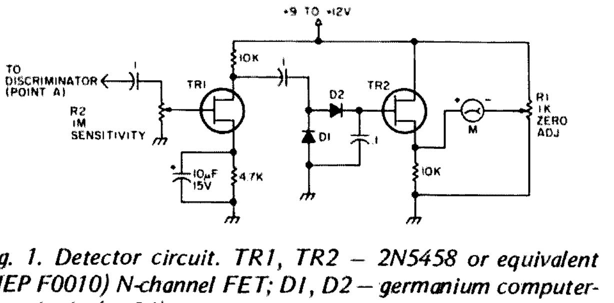

Fig. 1. Detector circuit. TR1, TR2 – 2N5458 or equivalent (HEP F0010) N-channel FET; D1, D2 – germanium computer-type diode (1N34); M – test meter on low voltage scale (3 V).

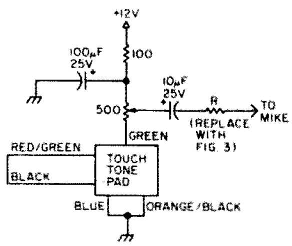

Fig. 2. Basic circuit.

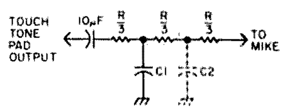

Fig. 3. Frequency correction circuit. $X_c = 1/2\pi fC$; *let* $X_c = (1/3)(R/3)$; $C = 9/2\pi fR = 9/(6.28)(700)(R) = .00205/R$; $C = 2050/R\ \mu F$.

after the de-emphasis circuit. You will have to look at the schematic drawing to determine where the correct discriminator output is located. In the typical discriminator circuit shown in Fig. 4, the output should be derived from point A through an 18k resistor. Point B is the wrong test point, since it occurs after the de-emphasis circuit. Even with the discriminator output properly selected, the de-emphasis circuit acts as a variable frequency load on the discriminator, and it is capable of creating some error. The error will be less for vacuum tube receivers than for the solid state types because the circuit impedances are higher and the discriminator loading is less.

Perform all adjustments using low power into a dummy load. The procedure requires use of a measuring device, which can be either an oscilloscope (low frequency scope is OK) or a detector circuit (shown in Fig. 1) which uses an ordinary 20,000 Ω/V VOM as an indicator. The oscilloscope is preferred because it can show if any distortion is occurring, but the detector circuit will do an adequate job in most cases and can be constructed quickly on a breadboard. The detector, like the oscilloscope, places essentially no load on the circuit to be measured and responds to peak values of deviation. The meter can follow voice peaks with no problem.

Before using the detector, turn R2 counterclockwise (no input) and adjust R1 for a zero meter reading. The meter should be on a low-voltage dc range (1 to 3 V). The next step is to calibrate the measuring device (oscilloscope or meter circuit) for 5 kHz deviation. This will require some approximation, as most amateurs don't have an accurate 5 kHz deviation standard. Connect the detector to point A of the discriminator. The meter in Fig. 1 will be driven upward as signals are received and audio is heard in the speaker. The amount of meter deflection is controlled by R2. Listen to various channels for several days; the peak meter reading on the louder-sounding signals will probably correspond to 5 kHz deviation. Another method is to yell into your mike on a simplex channel and observe the measuring device. This assumes that your transmitter has been set by the manufacturer at 5 kHz deviation. Adjust R2 so that the meter reads approximately half scale on voice peaks with either of the approaches. Actually, it will be most convenient to set the meter needle via R2 to read 5 while looking at a 10-, 12- or 15-volt scale, even though the meter is set on a lower range. The actual deviation can then be read directly from the meter scale. This is a rough calibration procedure, but it's good enough for our purposes.

Use the touchtone pad circuit shown in Fig. 2. Adjust the 500-Ohm pot one quarter of the way open (from no signal). This is to allow for more signal to be available later, after the frequency corrective network is installed. On the conventional Bell touchtone pad, pushing buttons 2 and 3 simultaneously will generate the low tone (697 Hz) only. Pushing buttons 3 and 6 will generate the high tone (1477 Hz) only. While generating a low tone, determine what value R will produce 5 kHz deviation on your measuring device. R will be around the orders of magnitude shown in Table 1.

With R installed, reduce the setting of the 500-Ohm pot so that the high tone produces about 2.5 kHz deviation. This is to insure that the transmitter audio circuits are not limiting. Generate the low tone and observe the deviation. If it is within 20% of the high tone, your problems are nearly over. However, there is small probability that this will occur because of the pre-emphasis circuits. Don't be surprised to find a 2 to 1 tone unbalance. Assuming that you do have to correct for tone unbalance, divide R into roughly 3 equal parts, as shown in Fig. 3. Compute the value of C1 (μF) = 2050/total resistance.

The value of C1 is not critical. Twenty-five percent variations are allowable. Install C1 and measure the difference between high and low tones again at about 2.5 kHz deviation. You will notice that the high tone is now closer in amplitude to the low tone. In most cases, this is all of the correction that will be required. If the high tones are still too large, install an identical capacitor at C2. If, after doing this, the high tone is less than the low tone (you have overshot), reduce C2 in value until tone balance is obtained.

You have now completed the tone balance and are ready to set the deviation. Press button 3 only, and set the 500-Ohm pot for 4 to 4.5 kHz deviation. This setting should be just below the limiting level of your transmitter.

If you cannot obtain 4.5 kHz deviation when the 500-Ohm pot is turned all of the way up, this is an indication that R is too high. Lower R in 20% steps, and recompute C for each reduction. The corrective network is designed to provide light loading on the mike input and should not affect normal operation. If it does, the alternative is to put a switch in series with the touchtone output lead. The corrective network provides an impedance matching function between the mike input and the touchtone pad output, as well as acting as a frequency equalizer. Needless to say, it is desirable to put the touchtone pad and components into a metal box and use a shielded lead in connecting the pad to the mike input in order to minimize chances of rf pickup.

Although the procedure described above is intended for the conventional Bell touchtone pad, the principles can be applied to other touchtone pads. With some of the new pads, it may not be possible to generate the 697 Hz and 1477 Hz individual tones called for. In this case, push button 3 to generate both tones, and determine an R that will produce 4 to 4.5 kHz deviation with the touchtone pad set for roughly 1/4 output, if there is an output adjustment. Next, disconnect the pad from the 10 μF coupling capacitor, and feed into the capacitor an audio oscillator signal set for first 697 Hz and then 1477 Hz. Proceed as described previously for measuring the unbalance at the two different frequencies and in correcting for it. Be certain the audio generator produces the same amplitude for both tones.

The above procedure should be effective for most touchtone pad/transmitter combinations. If it isn't, it will require the services of a base station operator with an oscilloscope to analyze the problem. ■

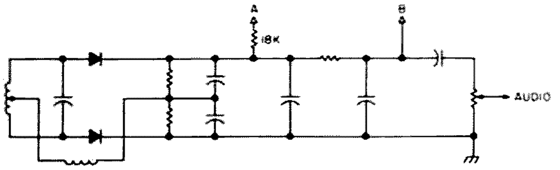

Fig. 4. Discriminator.

Very high impedance (ceramic or crystal mike)	1 meg
High impedance (magnetic mike)	100k
Low impedance (magnetic mike)	10k
Very low impedance (carbon mike)	1k

Table 1.

I do suggest you code or cable-connect these, so you can't interchange them. Entering the main control unit, this 24 V ac is rectified by a bridge diode pack (Motorola-type), filtered, and regulated by any one of the now commonly available 3-terminal regulators. The regulation allows your settings of charge times in the following circuitry to remain constant without regard to fluctuating power line conditions. One thing the now rectified and regulated dc is used for is the lamp monitor circuit. Leaving the main control unit via a barrier strip or 3-pin plug, as in mine, the 24 V dc is fed to a lamp (28 V, low current, long life) located on a bracket inside the squirrel cage. It has a tube (light pipe) around it to direct the light through the slots in the blower. You can usually mount the photocell (or phototransistor, etc.) directly to the outside shell of the cage enclosure after drilling a ½" hole for the light to get through. Make the mounting as airtight and lighttight around the outside as possible (pill bottle, lid, etc.). Don't shove the drill through the squirrel cage while drilling, and don't reverse the mounting, putting the lamp outside. It is hard to shield the photocell out on a bracket inside the cage, and the vibration of the enclosure of the cage would shorten the life of the lamp if it were mounted on the outer shell (live and learn).

Assuming the normal and proper operation of the motor, belt and load, the lamp shines on the photocell each time the slot in the squirrel cage goes by (several times per revolution). This creates pulses which are ac coupled to the "load detector" circuit. These pulses build up a charge on CT until Q2 pulls in relay K1. K1 breaks the heater lead of the thermal time delay relay (hereafter the TTDR), making its time delay infinite – it never closes – thus the relay K2 never closes, and the NO contacts of K2 keep 120 V ac on the motor for normal running. RC pot is used to set a time period of about 10 seconds worth of pulses for K1 to pull in. In other words, under normal conditions, you have 10 seconds of the pulses detected for K1 to pull in and switch the control unit to normal run mode.

Now, assume the motor stalls, the belt is off at start time, or the squirrel cage is frozen. The thermal TTDR allows 20 seconds of stall and no pulses before its contacts pull in, pulling in K2, and shuts off power to the motor. This allows time for the cooling cycle of the TTDR (about 1 minute in mine), and then it tries again. The switch in the remote alarm box also allows you to choose the mode you use. If it's in the manual position, it lets the unit shut down once, and then you must go down, find the trouble, and reset it manually with the reset button on the main control unit. This allows for times when you are away for extended periods, such as work or vacation. The switch line carries only 24 V, and can be rotor cable or the like, as in all lines to the remote alarm unit.

Another possibility is that the whole works starts okay, then a belt slips, breaks, or jumps off. The pulses must keep coming, or the detector circuit will decay and allow K1 to drop out. Since the TTDR is then reconnected to the 24 V ac, 20 seconds later the TTDR contacts pull in, and K2 pulls in right after, shutting down the motor again.

It should be easy to see how all this applies to my well pump, as well (old style with spokes on the pump drive wheel), or to any other electric motor on which you can attach some pulse-forming wheel to the load end. I say load end, so you can detect belt or drive system failures as well. I have tried to arrange the schematic so you can see what is really located where in my system, and how it all interconnects to the remote alarm unit along with many other sensors and wiring.

I did not place values on RC1, RC2, RD1, RD2, or CT, to allow you to choose your own based on what time you use on the 20-second TTDR or similar unit and on what you have around, and to leave you room to modify it to your own purpose. It is easy to choose ball park figures for them by assuming Q1 is a switch that is on all the time and charges up CT in RC x CT seconds (R in Ohms, C in farads). Depending on the pull-in current for K1, that current is the collector current in Q2. The base current

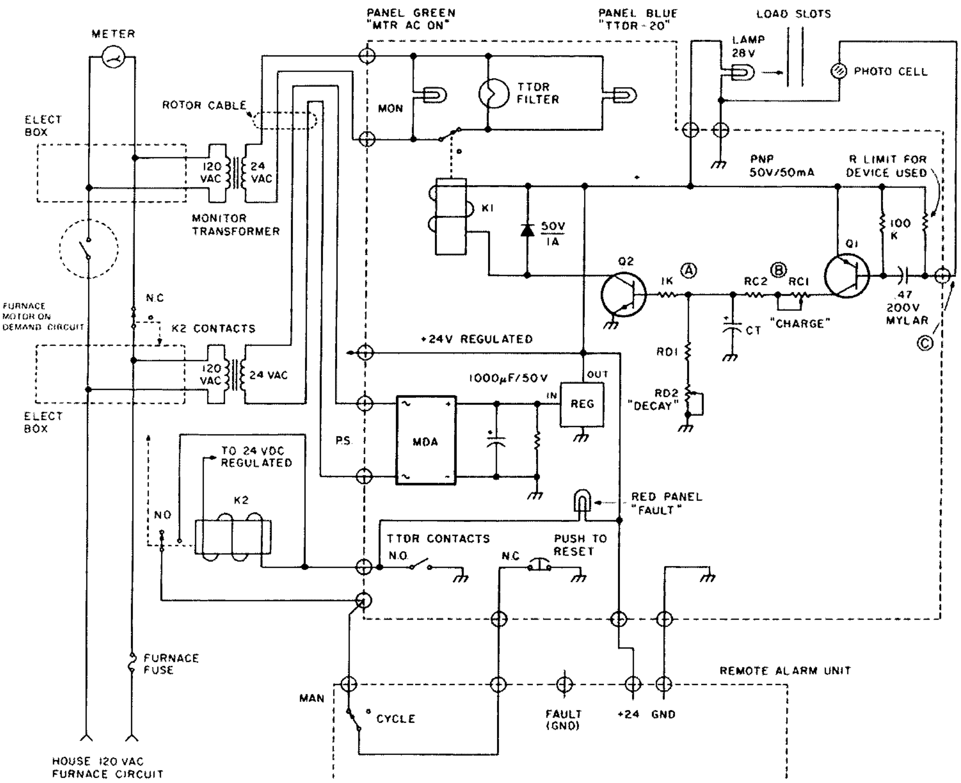

Fig. 1. Stall detector. To test: Open connection at C and run system. 1) Green and blue come on; 2) after 20 seconds, red lights and motor shuts down; 3) reconnect C, and, at 20 seconds, no red and motor runs through normal cycle. Note: If it's in manual at the time of fault, switching to cycle will reset after TTDR cool-off. But this is not recommended, as it defeats the purpose, which is that you investigate the problem.

required to cause that current is going to be roughly the collector current (IC) divided by the beta of the device you use (use a 50 V or higher, NPN silicon, and about 2-5 times the current required by K1). The voltage at point A must be high enough to cause this base current through the 1k base resistor. (When the transistor is on, the voltage at the base is very close to .6 V; therefore, if the voltage at point A was 1.6 V, then there would be 1 V across the 1k resistor for 1 mA of base I. Further, if the Q2 beta was 100, you could pull approximately 100 mA down through the collector circuit including K1. If 100 mA was the pull-in current of K1, then 1.6 V at point A would cause a relay pull-in to occur. The variable part of RC sets how long it takes to get up to this point A level.) An easy out is to make RD1 + RD2 = RC2, so you know it takes twice as much voltage at B as you need at A. Make these resistors at least ten times the 1k base resistor, so the Q2 remains the main control element in the discharge path, since you don't need nearly the delay for a detected failure as you want for a detected "load running" condition.

My two units work fine, and I have simulated every usual failure I have had to contend with over the years. I might add a few notes here about my remote alarm unit. I have burglar, fire, smoke, and another type of "fire situation" detectors all run into one unit, as well as one of the Poly Paks chassis-only AM-FM radios and my intercommunication station. This makes quite a versatile and attractive package which ties up all these units and a power line monitor in the same box. While I was at it, I included an ac carrier current system that allows me to turn on the 2m FM downstairs and then operate it from up there as a "help" device if the phone lines are out. I have, therefore, included only enough to show you how to get your unit going. If you are interested in the rest, drop me a line.

The wiring provides +24 V dc from the main control unit, to drive your alarm device if you need it, a common ground, and a switched line that closes to ground on a fault alarm. Also, the cycle and manual lines come up, for a total of 5 lines, but I suggest you run 8-conductor rotor cable with the +24 V dc and ground on the heavy pair and allow for future additons. After I kept monkeying around for more than 5 years, I did this, and I also ran a 24-pair bus system to and from every room in the house using old pulled-from-service telephone cable. It has saved me many trips back under the house (only a half basement).

I have come up with several possible uses since the initial needs arose. One is to tell me if the beams are frozen up before I burn up the rotor (especially handy, since the 24 to 30 V ac is usually already available as the voltage that runs the motor, and my beams are set up to send down position as digital-code anyway). Another is as a sensor on another project I have tackled each of the past 5 winters, which is to tell me if the car really starts when the timer says for it to (cold mornings are a whole other story not yet perfected). A future use is to detect stalls or no wind conditions (discharge) on a wind generator I hope to get up next summer. This may not seem like much of a ham radio article, but I doubt that many of us haven't cussed the conditions it monitors. If you are amongst the chosen few who have not, just wait!

You help me and I will gladly help you, so, for any questions, the proper SASE will bring a speedy reply (usually same day). ■

Jim Labo KØOST
6359 South Fenton Court
Littleton CO 80123

Try 220, You'll Like It!

—use it or lose it!

How do we solve the problem of ever-increasing numbers of VHF FMers? The high end of two meters is extremely crowded. All 30 kHz split repeater channels are in use in many metropolitan areas. Where do we expand next? The first option is 15 kHz tertiary channel repeaters. This solution has large technical problems. There is a second, and much easier, solution – expansion into the 220-225 MHz band.

The greatest deterrent to the growth of 220 MHz was the lack of commercially available equipment. There were a few notable exceptions by Gonset, Tecraft, and innumerable converter manufacturers. A determined amateur had to build his own 220 MHz equipment. Their numbers were small because, unfortunately, it takes commercially made equipment to attract large numbers to a new band or mode. With all its advantages, two meter FM had only slow growth during the era of converted surplus high band (150-172 MHz) equipment. Today's fantastic growth occurred only after the introduction of equipment specifically made for the ham market. Ham SSTV had the same growth problem, before the manufacturers took an interest. This is no longer a problem for 225 MHz FM, as the manufacturers are now ready. Take your choice and enjoy the boom.

If you are interested in joining the 225 MHz gang, here is the basic information to get you properly oriented for your new venture. There are three primary questions to be answered:

1. What kind of results can be expected on 220 MHz?
2. Where on the band do I operate?
3. What kind of equipment is now available?

Coverage

The 220 MHz band is very similar to two meters. With comparable 220 MHz equipment, you have similar coverage. This was the second major reason for the lack of 220 MHz growth. A VHF experimenter would move up to 432/450 MHz after two meters, as he wanted something different. This similarity should now be an advantage.

Two-twenty has fewer dead spots then two meters because of the shorter wavelength. Two reflections of the same signal arriving at the antenna out of phase cause dead spots. With the shorter wavelength, the mobile antenna moves less to get back to in-phase reflections, thus has smaller and fewer dead spots.

Band Plans

FCC regulations allow all amateur modes, except wideband TV and pulse, on the entire band. With no official guidelines, some sort of gentleman's agreement is needed for the orderly occupation of the band. In the early seventies, a band plan was adopted with channels every 40 kHz from 220.020 to 224.980 MHz. Repeaters were allocated inputs, Fig. 1, from 221.58 to 221.98 MHz, with outputs 3 MHz higher.

However, the infamous repeater docket (18803) upset this plan by restricting repeaters to only 222 to 225 MHz. It is interesting to note that RACES repeaters can use the full 220-225 MHz band. The 220 to 222 MHz segment apparently was being reserved for a Class "E" Citizens Band. The current 220 MHz band plan eventually adopted is:

220.00 to 220.30 MHz. Narrowband (SSB/CW/AM) modes in the eastern and central portions of the country. The "common frequency" is 220.050 MHz, or an 8.150 MHz crystal. However, due to the usual mismatch between crystal and oscillator circuit, those users are anywhere from 222.020 to 220.070 MHz. The better equipped stations tend to hug the low end, just above 220.00 MHz.

220.30 to 222.00 MHz. Control frequencies and auxiliary links. Two-twenty is the lowest band where the radio control link of a remotely controlled transmitter is permitted.

222.00 to 222.30 MHz. Narrowband modes on the west coast and moonbouncers working the west coast. The 220 MHz band is the lowest, fully shared band with the government radiolocation service, which has priority. TV local oscillators and radar garbage render the low end useless. These problems are present in the rest of the country in varying degrees. But only on the west coast have the narrowbanders moved away from the low end garbage.

222.34 to 223.38 MHz. Repeater inputs. The repeater standards are 40 kHz channels, with repeater outputs 1.60 MHz above inputs. Fig. 2 shows the repeater pairs. The original band plan design called for creation of 20 kHz split repeater channels, when all the 27 repeater pairs were in use. However, in many areas, the 222.00 to 222.30 and 223.60 to 223.90 MHz segments are being allocated for additional repeaters before adopting split repeater channels. These areas need good cooperation/coordination between expansion repeater owners and area 222 MHz narrowbanders. A high powered 222 MHz moonbouncer would wreak havoc if he used the repeater input frequency. Since the 220 MHz band plan was adopted before the phenomenal FM growth, maybe discussion should begin on moving the narrowbanders to just below 222.00 MHz, say 221.70 to 222.00 MHz. This would prevent friction between FMers and narrowbanders and yet leave the narrowbanders high enough to avoid the low end garbage.

223.42 to 223.90 MHz. FM simplex channels. The national simplex channel is

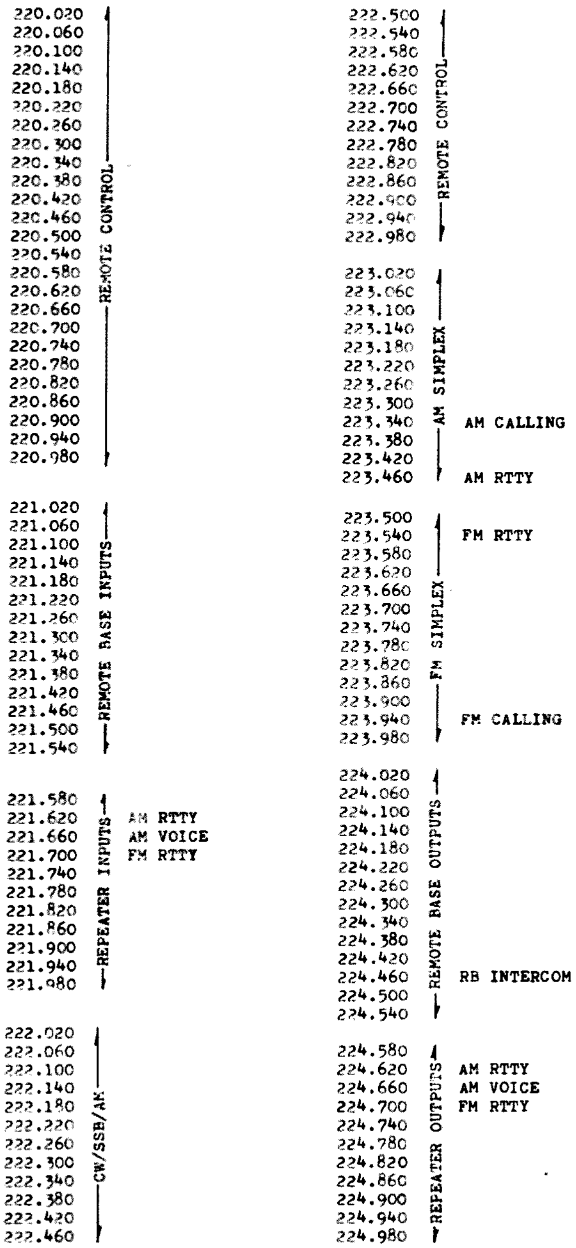

Fig. 1. The original 220 MHz band plan, drawn up in the early seventies. Southern California's influence is shown from there being more remote base than repeater pairs.

REPEATER CHANNELS

INPUT	OUTPUT	
223.38	224.98	
223.34	224.94	
223.30	224.90	
223.26	224.86	
223.22	224.82	
223.18	224.78	
223.14	224.74	
223.10	224.70	(RTTY)
223.06	224.66	
223.02	224.62	
222.98	224.58	
222.94	224.54	
222.90	224.50	
222.86	224.46	
222.82	224.42	
222.78	224.38	
222.74	224.34	
222.70	224.30	
222.66	224.26	
222.62	224.22	
222.58	224.18	
222.54	224.14	
222.50	224.10	
222.46	224.06	
222.42	224.02	
222.38	223.98	
222.34	223.94	

SIMPLEX CHANNELS

223.90	
223.86	
223.82	
223.78	
223.74	
223.70	(RTTY)
223.66	
223.62	
223.58	
223.54	
223.50	NATIONAL SIMPLEX
223.46	
223.42	

REPEATER EXPANSION CHANNELS

INPUT	OUTPUT
222.30	223.90
222.26	223.86
222.22	223.82
222.18	223.78
222.14	223.74
222.10	223.70
222.06	223.66
222.02	223.62

Fig. 2. The repeater and simplex channels under the present 220 MHz band plan.

223.50 MHz. The recommended expansion order is 223.46, and then 223.54 MHz as simplex activity builds.

223.94 to 224.98 MHz. Repeater outputs. The two most popular pairs are 34/94 – 222.34/223.94 and 223.34/224.94 MHz. The frequencies 223.10/224.70 and 223.70 MHz are reserved for RTTY.

Equipment

To get on 225 MHz FM, there are three basic methods: buy, build, or butcher. If you are interested in the last two, a check of the annual indexes of popular ham magazines for the last ten years should help you. If you are interested in buying a 225 MHz rig, the manufacturers are ready with a wide choice. All the new 225 MHz FM transceivers are multichannel, solid state, with features comparable to their two meter cousins. They come with only the national simplex channel, 223.50 MHz, and will need crystals for your 225 MHz repeater. Fig. 3 shows there is quite a range in price and features.

A major consideration in choosing a 225 MHz FM transceiver is receiver image rejection. The problem arises if the receiver uses injection below the desired receive frequency. For 220-225 MHz, using the common 10.7 MHz i-f, the image falls between 198.6 and 203.6 MHz, or TV channel 11. If this channel is in use in your area, your receiver will need excellent input selectivity. Receivers using high side injection have images in the 225-400 MHz military communications band, eliminating the problem.

The VHF Engineering unit is a kit. It is definitely not what you may have become used to with Heathkits, as there are no step-by-step directions. If you have had some building experience, it is a very good buy. The TX-220 and RX-220 can be built now and multichannel, scanning, or power amplifier modules can be added, as interest and finances permit.

The Genave is a good, basic, no frills unit. The ten channels can be ganged or the transmit and receive frequencies separately selected.

The Clegg FM-76, Cobra, and Midland are identical. Features include an S-relative power meter and prewired accessory socket. The four-pin socket has connections to the mike input, +12 V dc on transmit, and discriminator. Group purchase discounts are available. Spectronics handles the Cobra and Midland, while Clegg deals direct. On group purchases, Clegg includes crystals for your repeater as part of the package.

The Tempo unit is in the deluxe class. Features include a built-in discriminator meter, a simplex spot switch, and provisions for an external vfo or crysal oscillator.

The TPL is designed for both 220 MHz FM and AM. It is the only unit completely usable on both modes. The receiver is tunable from

	Channels	Frequency Trimmers	Xmit xtal formula	Rcvr xtal formula	Rcvr Inject. side	Rcvr Sens. 20 dB quiet.	On/Off Sw location	External Spkr. jack	Accessory socket	Meter	Power Output	Current drain lo/hi/rcv only	Size (inches) w-h-d	List Price	Review Articles
Clegg FM-21	12	xmit	$\frac{F-41}{4}$	----	below	0.22	offset	yes	no	yes	10 W	0.45 1.30	7 2-3/4 9	($320)	*QST*, June '74 p. 44
Clegg FM-76	12	both	$\frac{F}{12}$	$\frac{F-10.7}{4}$	below	0.4	pwr level	yes	yes (wired)	S/ pwr	$\frac{10\ W}{1\ W}$	0.18 A 3.0 A 1.1 A	6-1/2 2-1/4 9	$190	
Cobra VHF-200	12	both	$\frac{F}{12}$	$\frac{F-10.7}{4}$	below	0.5	pwr level	yes	yes (wired)	S/ pwr	$\frac{10\ W}{1\ W}$	0.22 A 3.2 A 1.1 A	6-3/8 2-1/4 8-7/8	$230	
Comcraft CST-50	Synthesized 5 kHz step 144-148 & 220-225 MHz				?	0.4	audio level	yes	yes	S/ pwr	28 W	1.0 A 6.0 A	10-1/2 3-3/4 10	$870	
Geneve GTX-100	10	xmit	$\frac{F}{16}$	$\frac{F+13.1}{4}$	above	0.35	pwr level	yes	no	no	$\frac{12\ W}{1\ W}$	0.90 A 5.0 A 1.7 A	6-1/2 2-1/2 9	$150	*QST*, May '76 p. 34
Johnson Messenger 380	6	both	$\frac{F}{12}$	$\frac{F-10.7}{12}$	below	0.35	----	yes	yes	no	7 W	---	8 2-1/2 12	----	
Midland 13-509	12	both	$\frac{F}{12}$	$\frac{F-10.7}{4}$	below	0.5	pwr level	yes	yes (wired)	S/ pwr	$\frac{10\ W}{1\ W}$	0.22 3.10 1.10	6-3/8 2-1/4 8-7/8	$230	*QST*, Mar. '75 p. 52
Regency HR-220	12	xmit	$\frac{F}{18}$	$\frac{F+10.7}{4}$	above	0.5	audio level	yes	no	no	$\frac{10\ W}{1\ W}$	0.8 2.50 ?	5-1/2 2-1/4 7-1/2	$240	*QST*, May '73 p. 52
Tempo CL-220	12+ext osc	both	$\frac{F}{18}$	$\frac{F-10.7}{5}$	below	0.36	pwr level	yes	yes	yes	$\frac{10\ W}{3\ W}$	0.25 2.80 ?	6 2-1/4 9	$299	*QST*, May '73 p. 52
TPL 220TR	12+tune rcvr	both	$\frac{F}{27}$	$\frac{F+10.7}{?}$	above	0.3	audio level	yes	yes	S/ pwr	15 W	0.15 3.0	8.5 2.9 12.0	$339	
VHF Engineering TX220/RX220	1	xmit	$\frac{F}{12}$		below	0.4	--	--	--	--	1.5 W	0.200 1.0	--	$110	
Wilson 2202-SM	6	both	$\frac{F}{18}$	$\frac{F+10.7}{18}$	above	0.3	pwr level	yes	yes	no	2.5 W 1 W	.014 .05 .025	2-7/8 1-3/4 8-7/8	$240	

Fig. 3. Commercially available 220 MHz transceivers. (This originally appeared in Texas VHF-FM *Society News, Spring-Summer, 1976, p. 15.)*

220-225 MHz or can be crystal controlled.

The Comcraft is a top-of-the-line transceiver. It is fully synthesized in 5 kHz steps, covering both 144-148 and 220-225 MHz. It is equipped with several repeater offsets, or it can be used split mode. The receiver has detectors for both FM and AM; the transmitter is FM only.

Included for completeness are two units that are no longer on the market: the Clegg FM-21 and the Johnson Messenger 380. The units are still available on a second-hand basis. The Clegg FM-21 uses a single crystal for both transmit and receiving on the transmit frequency, and receiving 1.6 MHz higher for repeaters. The Johnson unit never reached the market. Seventy of these units were built circa 1973. Apparently they were a production test run for a Class "E" Citizens Band transceiver. When Class "E" did not materialize, they were sold to the local Waseca amateurs.

As you can see, there is a 225 MHz FM transceiver for almost every pocketbook. With the introduction of this ready-made 225 MHz equipment, activity has been steadily rising. Some areas – New York City, Chicago, and Los Angeles – already have reached the band plan limits for repeaters. With some re-adjustments to the band plan, thirty-five primary repeater channels should help take the load off two meter FM. Come join the fun on two-twenty. ■

Bibliography

1. "Wide-band FM gear for 220," (mod osc, 316A-6252), *QST*, Mar., 1961, P. 29.
2. "500 Watt FM and CW transmitter for 220 MHz," *QST*, May, 1969, P. 21.
3. "Feedback," *QST*, Sept., 1969, P. 17.
4. "220 Converter for FM pocket receivers," *73*, Feb., 1971, P. 42.
5. "We live on 220," *RPT*, Oct., 1971, P. 25.
6. "The Motorola 80D on 220 Mc FM: Transmitter," *CQ*, Oct., 1971, P. 16.
7. "The Motorola 80D on 220 Mc FM: Receiver," *CQ*, Nov., 1971, P. 51.
8. "The Motorola 80D on 220 Mc FM: Antennas," *CQ*, Dec., 1971, P. 28.
9. "A 55 MHz to 220 MHz varactor quadrupler," *GL220*,* Nov., 1971.
10. "We live on 220," *RPT*, Dec., 1971, P. 35.
11. "Converting Motorola Sensicon 'A' receiver and 'G' transmitter," (FM col), *CQ*, Dec., 1971, P. 41.
12. "Some thoughts on 220 MHz operation," *QST*, Dec., 1971, P. 25.
13. "We live on 220," *RPT*, Jan., 1972, P. 49.
14. "A 5894 FM Amplifier," (FM column), *CQ*, Jan., 1972, P. 47.
15. "A varactor quintupler for 220," *QST*, Jan., 1972, P. 11.
16. "Converting the Pip-Squeak to 220 MHz," *QST*, Feb., 1972, P. 46.
17. "A Converter for 225 MHz FM," (52.525 MHz I.F.), *CQ*, Apr., 1972, P. 14.
18. "A 450 cm new front end for your FM receiver," (220 Conv), *QST*, June, 1972, P. 11.
19. "A Pip-Squeak follower for 220 MHz," *QST*, July, 1972, P. 38.
20. "Osc and audio circuits for 50 and 220 MHz, WBFM with crystal control," *QST*, Oct., 1972, P. 17.
21. "A C.B. rig for 220 MHz," *QST*, Jan., 1973, P. 32.
22. "Tempo CL-220 transceiver," (recent equipment), *QST*, May, 1973, P. 52.
23. "Getting on 220 MHz cheap and easy (450 GE Prog.): receiver," *Decoder*,* Summer, 1973.
24. "Getting on 220 MHz cheap and easy (450 GE Prog.): transmitter," *Decoder*, Fall, 1973.
25. "A power amplifier for 220 MHz FM," *HR*, Sept., 1973, P. 6.
26. "A 220 MHz band plan," (FM/RPT column), *QST*, Jan., 1974, P. 62.
27. "FM'ing your 220 MHz AM transmitter," *CBITS*,* Mar., 1974.
28. "Cheap and easy 220 repeater rig (Link 2975): receiver," *CBITS*, May, 1974.
29. "Cheap and easy 220 repeater rig (Link 2975): transmitter," *CBITS*, June, 1974.
30. "The Clegg FM-21 transceiver," (recent equipment), *QST*, June, 1974, P. 44.
31. "A 220 MHz frequency synthesizer," *HR*, Dec., 1974, P. 8.
32. "The Regency HR-220 transceiver," (recent equipment), *QST*, Mar., 1975, P. 52.
33. "Converting the Motorola 'G' transmitter to 220 MHz," *GL220*, Dec., 1975.
34. "Building a 220 MHz repeater," *73*, Apr., 1976, P. 40.
35. "The Genave GTX-100 220 MHz transceiver," (recent equipment), *QST*, May, 1976, P.34.
36. "The VHF Engineering RPT-220 repeater," (recent equipment), *QST*, Nov., 1976, P. 36.

**GL220* = Great Lakes 220 MHz News KØOST; *Decoder* = Crestline Amateur Repeater Organization WR6ACJ; *CBITS* = Cheese Bits/Mt. Airy VHF Radio Club WR3ACD.

Eugene X. Dusina W4NVK
4724 Ridge Grove Rd.
Knoxville TN 37918

How To Dissipate 200,000 Megawatts

—fool Mother Nature

Many who putter with radio eventually evolve to the point where they are sticking poles and wires up into the air which protrude above the trees. Because God loves his children, even those who putter with radio, only a few of these fellows catch all they are fishing for.

I am reminded of a fellow down in Florida who fished for small sharks from a pier. He caught many, but pulled out only a few because they broke his tackle. He remedied this with typical Yankee ingenuity by getting braided leader in a long length which he used for string. All went blissfully well until one day when he caught a manta ray. It yanked him off the pier and nearly drowned him before he got loose from his improved tackle. Even so, one arm was so sprung that he was feeling quite poorly for about a month. You see, this fellow wanted to catch sharks, but he neglected to ponder what else in the environment he might catch and how he would fare if he did.

Fig. 1. Typical lighting bolts.

But let's get back to the innocent radio buff. He seeks to catch signals in the wee microvolt category and frequently neglects to acknowledge that the same tackle may hook onto a large digital signal, known as lightning in layman's terms, which ranges in the million-volt range. This article is to help him ponder the fateful day when he catches that big one which always before got away. Fig. 1 shows the size of some likely catches.

The first commandment to consider is that any metallic protuberance which pokes above other things in the vicinity is a candidate for a direct hit by lightning. It also happens that, although the antenna may only be small wire normally capable of carrying only a few Amps, it can for a few milliseconds carry the entire 100,000 Amps of a large bolt.

Now consider that grounds, even very good ones, have considerable impedance and resistance. You may study the power handbooks to see that ground rods typically have a resistance to earth of over 30 Ohms, and considerable effort must be expended to make one with an earth resistance below 10 Ohms. So let's take as typical a 20-Ohm ground resistance. Multiply the bolt current of 100,000 squared by 20 Ohms, and you can see that power at a rate of two hundred-thousand megawatts will be dissipated in this resistance. To appreciate this number, recall that a typical hydroelectric dam generates power at a rate of only one or two thousand megawatts or that the entire Brown's Ferry nuclear plant generates only 3000 megawatts. That dissipation in the ground resistance is not to be passed over lightly; it is very large, as things go.

It is true, though, that this power will last only for about a millisecond, but, even so, multiplying the dissipation by 1 millisecond still leaves an impulse of two hundred megawatt-seconds. For sizing this number, recall that a 450-volt 100 uF cap stores only 10 Watt-seconds, and that makes a respectable bang when shorted. Two tractor trailers at 55 mph dissipate only one-third of one megawatt-second in a head-on collision, and a dynamite cap

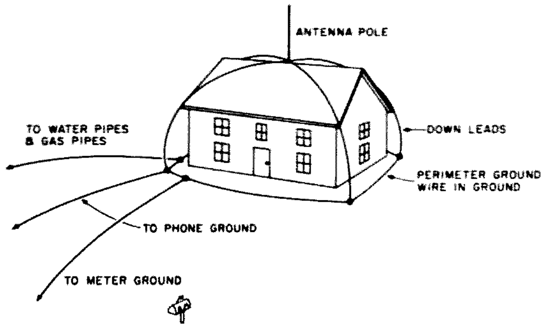

Fig. 2. How to protect the house.

explodes with an energy of 600 Watt-seconds. Obviously, a bunch of energy is going to be let loose when that bolt reaches earth. Fortunately, most of it will be dissipated underground where most of that 20 Ohms is, but even very small resistances in the line will share large energy. The truly spectacular display will come wherever the bolt must jump an inch or foot or yard to go from one grounded thing to another. Obviously, an astute radioman should expect some bird's nests and fried PC boards if a bolt ever enters his sanctuary.

The second commandment says no reasonable insulation will insulate against lightning. Recall that it has just busted through about a mile of air to get to you, and that air is a pretty good insulator. You might apply many yards thickness of space-age insulation and discourage it, but that's impractical, so let the commandment rest at that.

The third commandment says lightning cannot be stopped, but it can be led by a sufficiently attractive enticement. Since lightning is only wanting to get to Mother Earth, you may provide it a better path and hope it takes it. If the antenna is outside, you can do this by letting your lead-in pass within a half inch or so of any well-grounded object, and, almost always, the bolt will jump off there and ignore the rest of the house. A simple lightning arrester over at the house will then protect (usually) against the little that sneaks on up the line to the house. This is only so if a very good ground is hooked to the arrester.

If, on the other hand, the pole is on the roof or next to the house, that is another matter entirely. In this case, you could do as many do, and just stretch a bit as the big one goes through. I can tell this upsets you, so cease the clacking and listen close, for perhaps something can be done within reason.

What you must do is run several ground leads down from the tower, around the eaves of the roof, and to ground, as in Fig. 2. This way, the bolt will divide to go down all these leads and not go through the house. You will have led the bolt around the house, which, believe me, is 90% of the task of letting go of the big one.

Looking at the numbers showing voltage drop in the ground system in Fig. 3, you can see you are still far from safe. Normal ground resistance wili cause a voltage drop up to about a million volts. That is a lot of juice, and it can easily jump several feet to any object which is not at a similar potential. The power line ground, the phone ground, the water pipes, the sewer pipes, the gas pipes, your own tail, etc., will all be fair game for a thing called a side bolt. This is a lesser bolt of several thousand Amps which will flit about the house from one object to another until lots of things share in that rather large potential difference between stuff inside the house and the

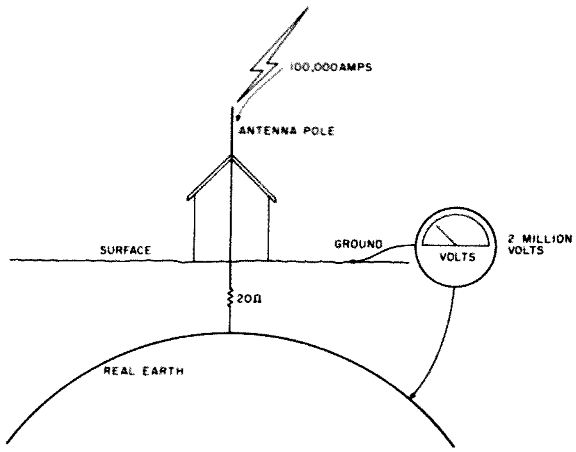

Fig. 3. How voltage drop on a good ground leaves millions of volts to flit around.

ground outside the house.

What you must do to prevent a passel of side bolts is to tie every one of those down leads from the tower to a wire perimeter in the dirt around the outside of the house, and then tie every other grounded thing that enters this circle to it. Run wires up from your perimeter wire to the meter ground, the phone ground, all pipes, etc., which enter the house. Any cables you have running away from the house should have their ground conductor tied to this perimeter. In this way, all these things will rise by the same potential during the bolt's passage through the ground, and there will be little chance of any side bolts inside this shielded cage you have constructed. Needless to say, hell will be raised out at the perimeter of this ring of protection, but you will successfully have kept it from happening inside the house. While this is not perfect, most radio men have learned to live with less than perfection, so they'll be happy.

Remember that a house with a properly grounded antenna above it is safer than a house with no antenna, but one with an improperly grounded antenna is a death trap and can suffer severe damage from a direct hit.

Another bit of advice is that lightning arresters will not protect against a direct hit. They are intended to protect only from induced surges of trivial energy which result when the guy next door gets hit. A perimeter must be set up as described and everything tied to it, including the arrester ground, for this to protect you for the outside antenna situation I described earlier.

When running ground leads, remember that the inductance of wire causes its reactance to far exceed its resistance to pulse currents like lightning. Therefore, very large voltage drops exist along the wire. If you carelessly increase this inductance by making sharp bends, the air may break down, forming a fat arc past the bend. This will blast a big hole in anything that was in the bend, such as the roof. So, make all bends gradual curves — no sharp corners!

Summing up all the above, you can survive a direct lightning hit by leading the bolt around your house and letting it dig up the yard to dissipate its energy. You can do this by building a perimeter of grounded lines around your house and then tying all things entering the house to this common ground. Having done this, your ears will still smart from the noise after a direct hit, but no essential parts will be malfunctioning. What more can one ask who persists in poking poles up where gods are thought to lie about doing their thing? ■

J. M. Mendelson W6AQM
5502 Corteen Place
North Hollywood CA 91607

Can A Miniature Antenna Work?

—relief for the cliff dweller

I have had some interesting results from experimental diminutive high-frequency antenna systems. In the unending search for adequate antenna systems for the apartment dweller with the usual space or landlord dilemma, some old and new ideas have been put to work.

A few months ago, I found myself asking our new landlord if we might discuss the possibility of installing a new antenna on our apartment-house roof. His answer was authoritative: "There shall be no amateur radio station in this building, and it will not be discussed further!"

Since my spouse had shown no desire to move to a location which might be more obliging to my hobby, I moved the hobby to a rented garage room approximately two blocks from our apartment house. Although the surrounding multitude of apartment buildings presented reflection problems, I at least had considerable freedom to carry on some rather interesting experiments toward developing adequate small antennas. What a joy it was to discover that my garage-room landlord became quite fascinated with those experiments.

The first antenna design I tested was a simulated multiturn loop in the shape of a subminiature quad — a diamond, approximately 42½ inches on each side. The multiturn character was contrived from a 5-wire flat ribbon rotor control cable. The end connections are shown in Fig. 1. The series coil was constructed from 7 turns of #12 bare copper wire (house wire stripped of its insulation). The coil was wound over a hoe handle whose diameter was 1-3/8 inches. The turn spacing was approximately 3/16 inch. The coil's dimensions were not critical, as it was used merely as a convenient coax transmission line coupling device. The coax ground, or braid, was connected to one end of the coil. The center lead of the coax was supplied with an alligator clip, to be connected variably to a turn on the coil for impedance matching convenience. Although the coil was used as a coupling device and not as a loading component, a slight adjustment of the antenna's frequency characteristic was possible by closing or expanding the coil turn spacing.

The spider for the crossarms was a 4-way ½-inch slip-type (not threaded) PVC plumbing fixture. The crossarms consisted of 4 pieces of ½-inch medium-wall-thickness (schedule 40) PVC pipe whose lengths, when inserted into the 4-way spider, presented a cross with each complete arm (horizontal and vertical) measuring 5 feet from tip to tip, including attached end caps. Notches the width of the ribbon cable were filed into the caps on the arm tips to act as saddles to accommodate the ribbon. Note the piece of drilled plastic which acts as a cable tightener or a slack adjuster. The four adjacent holes are sized to admit the ribbon with a tight fit.

Very interesting frequency characteristics were observed with this antenna. I found, for instance, that the device's lowest resonance was slightly below 14 MHz, when a similar resonance existed around 21 MHz. Both indications exhibited a comparatively high Q character. This bothered me, as I had never experienced this non-harmonic relationship before in a symmetrically constructed antenna. Of course, the coupling coil was the shady character here. It was apparently acting as a tuned trap with the large interturn capacity of the ribbon cable tuning it.

By carefully adjusting the inductance of the coil, I was able to load the antenna on 14 MHz as well as 21 MHz, with acceptably low swr values. This was too good to be true — a 2-band antenna that allowed me to make many cross-country contacts with a radiating device that cost me less than five dollars. The power output used for these operations and subsequent antenna design adventures was 125 Watts continuous from a Collins KWM 2A. All test contacts were made in the SSB mode.

As I noted earlier, the reflection problem presented by the surrounding buildings made for many frustrations when critical measurements were attempted. I concluded that ham radio sometimes requires that supreme effort of kidnapping one's spouse, tools, test equipment, and antenna, and escaping to the great American desert — a wide-open, unobstructed antenna playground!

We left the San Fernando Valley and many hours later arrived at Ranchito Peso, the desert home of Doc Kernan W6VST, on the California side of the Colorado River. This location is not only ideal country for checking antennas "in the clear," but also there are no telephones, which suggests the neighboring ranchitos use CB for

communications.

Doc Kernan took his communication receiver to the next ranchito (about 1000 yards removed), and, with a couple of CB handie-talkies, we were ready to see what our little antenna would do.

We raised the miniature to a 50-foot height on one of Doc's 3 masts and proceeded to check it against a 50-foot-high dipole on 15 meters. The results were disappointing. There was a loss of approximately 2 dB, compared to the dipole.

We decided to sum up the little antenna's potential by proclaiming it a partial success. It was an antenna that could be cheaply constructed, could be installed easily in an attic (hidden), and was efficient enough to allow operation for many pleasant cross-country contacts where it might be impractical for a full-size antenna installation.

However, the question haunted me about the technical failure of the antenna to fulfill my hopes. After much thought and a few helpful conversations with some of my old engineering articles, I concluded the following: The little antenna had less capture area than a full-size antenna. It evidently was a poor radiator.

Let's take that last statement into closer consideration. If you can visualize a curve, where you plot changes in efficiency on the x-axis against changes in antenna construction on the y-axis, you can better analyze the ribbon cable miniature antenna. Let's use, for one extreme antenna construction, a receiving coil with a capacitor tuning it to the desired frequency. Perhaps the coil has many turns and is, perhaps, ¼ inch in diameter. The other extreme construction might be a full-size dipole, cut for the desired frequency. The latter appears at the opposite end of the curve from the former. As you may realize, the receiving coil antenna, due to its extremely small capture area and the internal flow (pattern) of its magnetic field, is an absurd radiator. On the other extreme is the eminently efficient radiator – the full-size dipole.

As far as absorbing wattage fed through a transmission line, it is quite easy to match to a required correct impedance section of either radiator by several methods. I remembered that, just because an antenna absorbs all the energy you feed through the transmission line (swr = 1:1), it doesn't necessarily denote a good radiator. (My dummy load presents an swr of 1:1 and doesn't radiate a darn thing!)

The important lesson I learned from the above was that the 5-wire cable (multi-turn) coil-type antenna had a radiator efficiency at some inferior location on the aforementioned curve between the tuned receiver-type coil (very poor radiator) and the full-size dipole (excellent radiator).

My wife, the equipment, and I left and returned to the San Fernando Valley – back home and back to the drawing board.

Next idea – I would construct a single-loop antenna of the same physical size as the previous miniature radiator. This single-loop antenna, appearing as a single-element quad, showed resonance at approximately 66 MHz.

The only way to lower the resonant frequency to, perhaps, 21 MHz is to increase the L x C (inductance, capacitance product). To increase the L x C without adding a fixed capacitor, a comparatively large inductance (coil) would be needed. Remember, the single loop has (as does a simple dipole) an extremely large L to C ratio. To change the L x C product appreciably, with C practically constant, the antenna's inductance (physical size) would have to be changed radically. If L would remain constant, a very small change in C (physical size) would shift the frequency substantially. The reason an addition of just a small amount of capacity makes a large change in the L x C product is because the characteristic inherent capacity of the antenna might be so small in picofarad value.

Let's, for clarification, see how a dipole may be tuned. What does the capacity value appear as, from one end of the dipole to the other?

The capacity, in the main, is effectively produced by the end (highest impedance) of the dipole appearing as one plate of a capacitor. The other plate may be simulated by earth or ground. Of course, ground or earth are also under, or adjacent to, the opposite end of the dipole and are, therefore, similar to a common plate. The capacitance (in the main) is, therefore, a construction of a 3-plate capacitor, with common earth being one of the three.

If the antenna is several feet removed from earth, you will see that the end-to-end capacity of the dipole is extremely diminutive (on the order of a fraction of a picofarad). For those who like it with numbers:

$$LC = 25330/f^2\text{; with}$$
$$L \text{ in uH,}$$
$$C \text{ in pF,}$$
$$f \text{ in MHz.}$$

$$\text{Let } f = 66 \text{ MHz.}$$
$$\text{Let } C = 1 \text{ pF.}$$
$$L = 25330/4356 = 5.81.$$

$$\text{Change } f \text{ to } 21 \text{ MHz.}$$
$$L = 25330/441 = 57.43 \text{ uH.}$$

Note change of L from 5.81 uH to 57.43 uH, (which is 5.81 x 9.88). Change C (from 1 pF), but let L remain at original 5.81 uH.

$$C = 9.88 \text{ pF}$$
$$(LC \text{ for } 21 \text{ MHz} = 57.43).$$

Note that a change from 1 to 10 pF may be easily accomplished with end plates, etc. But to increase L 10 times might present a prob-

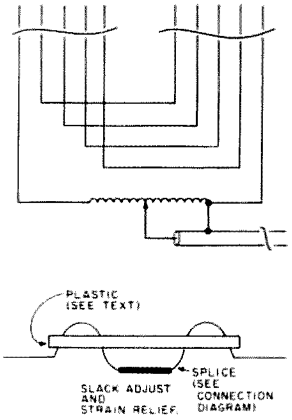

Fig. 1. Connect the ends of the 5-wire rotor flat cable to simulate a 5-turn loop. This also shows the coax connections to the coupling coil.

lem.

A driven quad element is a very intelligent device. That is, it says, "Wherever you connect that low-impedance transmission line into me, we'll call that point a low-impedance antenna point." Automatically, the similar point on the opposite side becomes another low-impedance point (½ wavelength removed). If the diamond-shaped square is used, and the antenna is fed at the bottom point, high impedance points are established at the two horizontal arm extremes (¼ wave removed). These characteristic impedance points on a driven quad element may be noted as similar to a stretched-out folded dipole.

If you desire to capacity tune the miniature loop to some lower frequency, the capacitor should be connected to the horizontal extremes of the antenna (high impedance points). If you treat the antenna as you might a tuned coil, the tuning capacitor would conventionally be connected to the coil ends, which are also this device's high impedance points.

I applied the above principle by constructing a capacitor and its vernier as shown in Fig. 2. The method and arrangement in the capacitor's construction

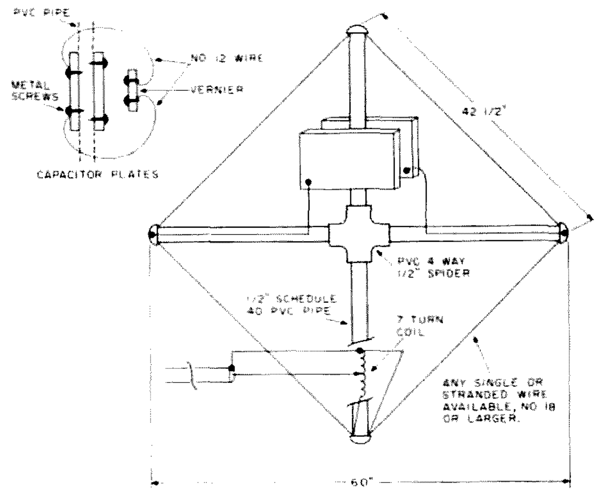

Fig. 2. The tuned loop with the adjustable high-voltage capacitor arrangement. Capacitor plate sizes: 20 meters (14.3 MHz) – 15-5/8" = 60.55 sq. in., vernier 2-3/8" x 3" = 7.125 sq. in., spacing 3/8" to 1/2", coax tap for 75 Ohms = 4th turn; 15 meters (21.3 MHz) – 5-1/16" x 3-7/8" = 19.6 sq. in., vernier spacing = 3/4", coil tap as above; 10 meters (28.6 MHz) 1-3/4" x 3" = 5.25 sq. in., vernier spacing 5/8", coil tap as above.

obviate any high-voltage rf arc-over that is probable from a lesser design. Remember that when approximately 125 Watts is interpreted in terms of extremely high impedance, as at the ends of a dipole, the rf voltage may appear as thousands of arc-over volts. Again, for those who like numbers: Let's pick a random high impedance to simulate the end impedance of a dipole. Let the end impedance approximate 10,000 Ohms in free space.

Where $P = E^2/Z$ or $E^2 = PZ$, it may be seen that, if P is 125 Watts and Z is 75 Ohms, E is 96.82 volts. However, that is the rf voltage developed at the 75-Ohm feedpoint. If we change the point of investigation to the end of the antenna (10,000 Ohms), E becomes a dazzling 1118 volts.

The vernier plate was adjusted for resonance to the desired frequency with the coax line disconnected. My grid-dip oscillator was used in conjunction with the station receiver to substantiate accuracy. The transmission line was then connected to the antenna, and a search for the correct coil turn tap was made, until a minimum swr value for the matching system was found. The coil turn spacing was adjusted very slightly, by compressing or expanding, for rechecking to a lowest swr reading. I had no difficulty in effecting a 1:1 value around the desired operating frequency. The swr held to very acceptable values over several hundred kHz.

I found that, unlike the full-size quad, adding a reflector or director had very little effect on forward gain, front to back ratio, etc., on the miniaturized loops. However, a very interesting effect was accomplished by using a so-called "extra element," not as a reflector or director in its conventional usage, but in the following manner: I first resonated the extra element to the operating frequency by placing it in close proximity to the driven element while said driven element was being driven with a few rf Watts. A field strength meter placed next to the driven element would approach zero-reading when the extra element approached resonance. It might be pertinent to mention that the extra element was constructed as an exact duplicate of the driven element, except for the coax input circuit.

I noticed a distinct increase in forward gain of approximately 4 dB when this extra element was placed in front of the driven element at a distance of 18 inches. This distance was critical, but the tolerance existed for good results from 16 inches to 20 inches. The operating frequency was 21.3 MHz.

The reason for this effect was not related to any conventional phasing enforcement, as with a director. Evidently, placing the extra element in a position near the driven loop's maximum magnetic flux fall-off in its flux pattern caused a distortion or distention in the pattern toward the front side. There's one certainty – the field strength meter (placed at a respectable yardage away) surely kicked up!

Measuring the gain of the above antenna looked rather promising. It was slightly better than the reference dipole at the same center height above ground. It was slightly quieter than the dipole, which was probably due to the slightly narrower bandwidth.

I had not reached any great feeling of accomplishment or satisfaction at this

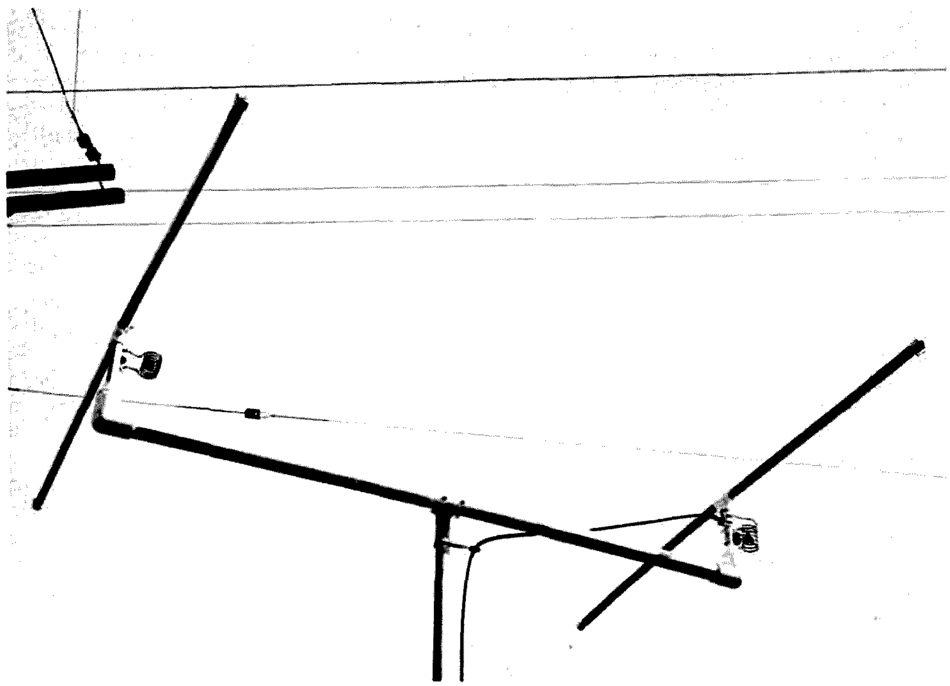

Photo A. Note the 1¼" PVC boom (schedule 40), the 90° elbows, and the 1¼" to ½" adapters to admit the ½" risers for the two elements. The coils are shown including the two alligator clips for finding the proper match for the small home-built balun on the driven dipole.

point. My old, tired feeling that the advantage of normal capture area of standard-size antennas could not be reasonably replaced with the reduced-size concoctions returned, and I found myself slightly discouraged but still looking for improvement. Back to the drawing board.

Next idea – I would construct a simple center-loaded 2-element yagi. This is not noteworthy for being innovative, but I must write down a few notes to let you folks know I hadn't given up!

Instead of merely installing a high inductance at the center of a five-foot length of #12 insulated house wire, I inserted a six-turn 1-3/8" coil, tuned by a fixed 4000-volt ceramic 50-pF capacitor. I drove over to see Mrs. Amidon, who sold me one of her T130-2 toroid cores, on which I wound a cute little 1:1 balun. They sell a kW kit, but this little inexpensive core takes good care of my KWM 2A output.

With one-tenth wave spacing between a director element and the driver, I worked eight South Americans, two New Zealanders, one Hawaiian, and the usual cross-country gang on 15 meters. They were worked starting at approximately 1900Z and, by 2400Z, I had disassembled the antenna and again was ready to conquer new worlds. I didn't care for the antenna's frequency discrimination. The swr was adjusted for the usual 1:1, by the usual procedure, with the exception of the balun's balanced output presenting 2 alligator clips for adjustable tapping to the driver center coil. It had to be operated at a selected frequency or the swr value could be very insulting. The selectivity of the system would put Mr. Collins' and Mr. Yaesu's receivers' front ends to shame. Of course, there are a couple of ways to lessen this difficulty, like reducing the L x C of the tuned center circuits or, perhaps, enlarging the antenna conductors to pipe or conduit size. Or, one could just go back to the drawing board.

Next idea – How about constructing a spiral-wound driven element? This sort of winding has also been given two other names – helical or linear element. I believe the terms "spiral" and "helical" are self-descriptive. The name "linear element" makes for interesting conjecture, if one contemplates the various magnetic wave patterns set up by the many types of radiators. But the term linear for this type of winding refers only to the magnetic intensity pattern or magnetic wave distribution over the length of the element. A straight-wire radiator might be called a linear element, for the obvious reason that the current and voltage loops and nodes are in their correctly-spaced positions. Adversely, the bottom coil loading and coupling arrangements, as used on the multitude of vertical antenna systems, place the above loops and nodes in questionable positions on the radiator, making for distortions and inefficiencies in the systems' propagation ability.

The Five-By-Five Yagi

This presently-used antenna has the same basic PVC material and element length as do the previous antennas described, except for the wire type and its winding shape.

The driven element has an overall dimension of five feet, including pipe end caps. Within the five-foot length there is a plumbing T-fixture. It is also of PVC material and is called by the plumber a "slip, slip, slip" type (as opposed to the threaded type). It allows the ½-inch schedule 40 PVC pipe to be press-fitted into any of the three T-inputs. If you feel you may want to take advantage of its portability, you may do as I have done. I sanded the near ends of the ½-inch pipes so that, while they fit snugly into the horizontal admission ports of the T, they can be readily removed, dropped into a large plastic bag, and buried in the car trunk.

Purchase or dig up a 26-foot length of zip cord (light weight with two #18 wires). Zip the lamp cord to make 2

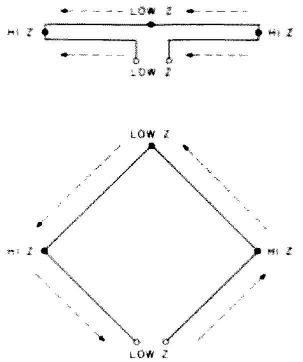

Fig. 3. Folded dipole. Arrows denote flow of rf current during 1/2 cycle. Note that current flow in the quad loop differs from that in the folded dipole at the same instant. Shortened loops, capacitively or inductively loaded, take the character of the antenna type they most nearly approximate, which poses the question: "How large is the loop?"

lengths of wire, each 26 feet long. Insert one of the ½-inch pipes into a horizontal port of the T as far as it will go. At a point ¼ inch down the pipe from the end of the T port entrance, drill 2 holes side by side (separated by approximately ¼ inch). These holes

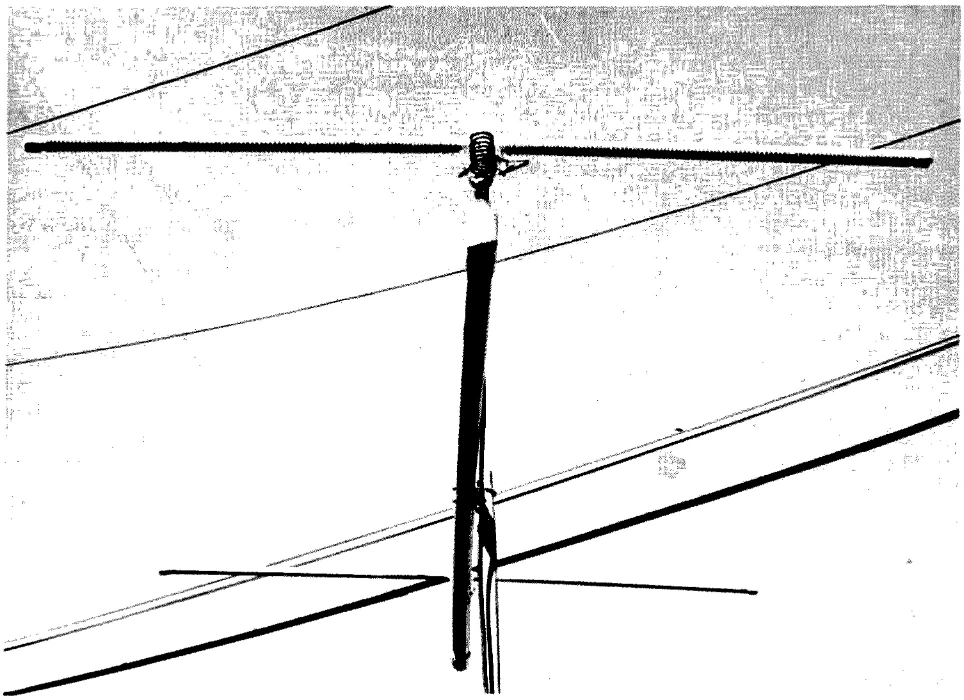

Photo B. Close-up of the coils in Photo A.

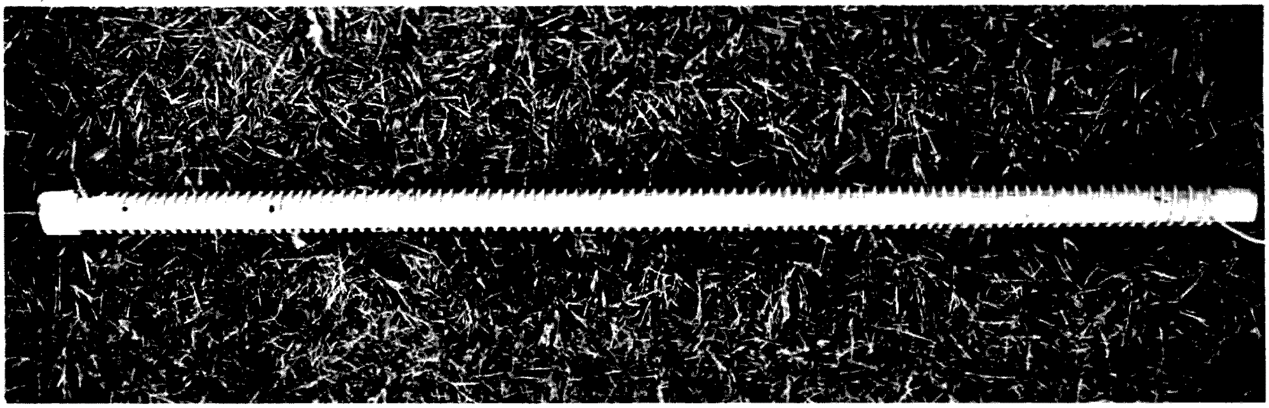

Photo C. One half of the driven element, showing half the zip cord helical winding. Note the straight piece of #12 copper wire on one end (explained in text).

should be sized to just admit the single zipped wire. Feed the wire in and out of these holes so that they anchor the wire to the pipe with 6 inches overhang, and the long wire is ready to start your spiral winding on the pipe's outer surface.

Install the pipe cap at the other end of the pipe. Measuring down the pipe away from the cap bottom, drill 2 holes and position them as at the other end of pipe. Remove the pipe cap. Spiral wind the wire, attempting to put approximately 3/8 inch spacing between turns.

The winding of both sections of the driven element should take about 1½ hours – one hour, if you're lucky. The trick is to have approximately 1½ inches of wire left after you've anchored the end down. You probably will find yourself rewinding several times, each time varying the turn spacing until you strike it correctly.

A spiral, or helical, winding of this shape will use roughly twice the amount of wire as the straight-wire dipole. Apparently, when a straight wire is laid out horizontally (or vertically), there is capacitance to ground (or earth) from every point of the wire. When a spiral winding is laid out, part of each turn's material is self-shielded by the adjacent turns. The end result is less capacitance to earth. So, in order to obtain an L x C product comparable to the 22-foot wire, we must increase the wire length (L) and exposed surface to earth (C). As stated in a previous paragraph, the self-tuning capacitance of the dipole (end-to-end capacitance) is extremely small.

When both sections are completed, insert the pipes into the two horizontal T-ports. Acquire an 8-inch section of ½-inch PVC to be used as a riser, and insert it into the bottom port of the T. Drill a hole into the 8-inch riser to accept a 6/32 machine screw at a location ¼ inch below the bottom of the T-port. Mount a large solder lug under the screw head and make sure the screw is long enough to penetrate the rear of the riser, so you can secure the screw with the proper washers and nut. Repeat this about 3½ inches down the pipe riser. These will be the coupling coil mountings.

The 6-inch wire ends should be connected to their respective coil ends. Either antenna lead may go to either end of the coil (one coil end receives one antenna lead). If you don't intend to use a balun, ultimately, the coax braid, or ground, should be connected to one side of the coil. The center or coax "hot" lead should have an alligator clip attached and should be arranged in length to have tapping availability to any turn of the coil. I mounted a chassis coax UHF connector on the 8-inch riser for disconnect convenience.

I found that this system became more precise as a beam antenna with a 1:1 balun mounted on the 8-inch riser. The beam itself has a tendency to be somewhat off direction (about 15 degrees). This effect was undoubtedly caused by the radiating coax section, which tended to distort (misphase) part of the beam's pattern.

I found that the director appeared to present a noticeable increase in forward gain over the reflector tuning (probably because of the desire to keep the antenna size small, i.e., one-tenth wavelength spacing).

For the director, I used an element identical to that of one of my former designs – a center-tuned loaded 5-foot #12 insulated house wire. The center coil for the director was 6 turns, with an o.d. of 1-3/8 inches. The fixed capacitor across the coil was a 50 pF 4000-volt ceramic type.

The #12 house wire was hung on the inside of the respective pipe sections, and the double mounting holes were used similarly to the lamp-cord situation on the driven element. The length was arranged so that enough starting hang-over existed for the connections to the coil.

Purchase one 5-foot piece of 1¼-inch schedule 40 PVC pipe. Have the plumbing house put on your bill a pair of 90° 1¼-inch elbows that will fit those 1¼-inch 5-foot pipe ends. Also necessary will be a pair of 1¼-inch to ½-inch adapters.

Mount an elbow on each end of the 1¼-inch pipe ends. Align the elbows together in one direction, accurately. Insert the adapters in the elbows' open ends.

That nearly completes the boom. Drill the 2 holes at the boom's middle for an appropriate mounting to your mast. I used Radio Shack hardware as used for TV antenna mounting. (My antenna is approximately the same weight as the average color TV antenna.) I mounted my antenna on an 8-foot aluminum TV mast and dropped it in the lawn one foot, leaving the system 7 feet above ground for tuning convenience. Tuning to resonance to the desired frequency (21.3 MHz) was accomplished with the coax disconnected.

If difficulty is encountered in resonating the driven element, apply the following methods: If the resonant frequency is too low to compensate for by compressing the coupling coil, clip small pieces of the 1½-inch end leads at both extremes of the element. Clip no more than ¼ inch at a time, until the frequency increases sufficiently.

If the resonant frequency is too high, add about 4 inches of #12 copper wire to both ends of the element winding. Anchor these extensions to appropriate

screws and washers mounted on the pipe end caps. Then apply the first step, using the clipping procedure.

Next, insert the coax and tap the coax alligator clip (clips if you balunize it) on the coil for lowest swr. Repeat the above two steps for the same purpose.

I found the quickest method for tuning the director was to resonate the director to the radiating driven element. This can be done by placing a field strength meter on the opposite side of the driven element for a medium scale reading with just a few Watts being radiated. Place your free director on a wooden ladder in proximity to the driven element (about 3 feet away). Compress or expand the director coil until the field strength meter declines to a minimum. This is a touchy and critical adjustment, so, to get close, start the procedure by making use of your grid-dip oscillator first. I found that, after using this method, a very slight increase in forward gain was obtained by keeping the director on a slightly higher frequency than the driven element.

As I mentioned before, my new garage-room location was fraught with ghosts, images, reflections, and reflections of the reflections. I finally found a method which lessened the dilemma's impact. I put the field strength meter in storage and warmed up my Millen grid-dip oscillator (this one really is a grid dipper; it's the old one with the tube!). I walked it back to the apartment house. After wrapping one loop of hookup wire around the base of the coil form, I grounded one end of this link wire to the Millen dipper frame. The other end of the link wire was clipped to my disconnected TV lead-in. I turned the dipper on and tuned it to the middle of the 21 MHz SSB section. Then I called up a friend of mine approximately one mile away. No, he couldn't hear the dipper. Great! I went to the ham shack 2 blocks away.

I brought the KWM 2A into the yard where the beam experiments were being performed. With the beam transmission line connected, the dipper signal was S5 when pointed directly for maximum signal. I then added approximately 9 feet of slip-in TV mast, making the height above ground 16 feet. Then things started to happen. Although some of the reflections remained, they were reduced considerably.

I've found that DX stations seem to have improved signal input from my station with the antenna approximately 11 feet above the ground surface. The actual height above true electrical ground in this location is very close to a quarter wave at 21 MHz. (This doesn't hold true for local contacts.) There is another pair of measurements which are not bad for this tiny antenna. The front-to-back ratio had to be checked very early in the morning, when the QRN from various appliances in the neighborhood is at a minimum. The front-to-back was approximately 3 S-units one morning. This is not considered unusual for a full-size 2-element yagi, when the parasitic element is a director. The forward gain over an 11-foot-high reference dipole was a big, fat 5 dB. I emphasize "fat" because, lest we forget, it is a reduced-size affair.

The trouble, I believe, with reducing the quad-loop size is that currents in the quad's opposite sides are out of phase and tend to cause some excessive wave canceling, whereas, if these sides are of some optimum separation, it will serve to help shape the total magnetic pattern to the typical quad advantage. As the sides approach closer and closer proximity, the opposite sides start to take on the folded-dipole character, where both sides are in phase.

All technical articles should wind up by giving a report on the results of the project. Here is mine — Great! ■

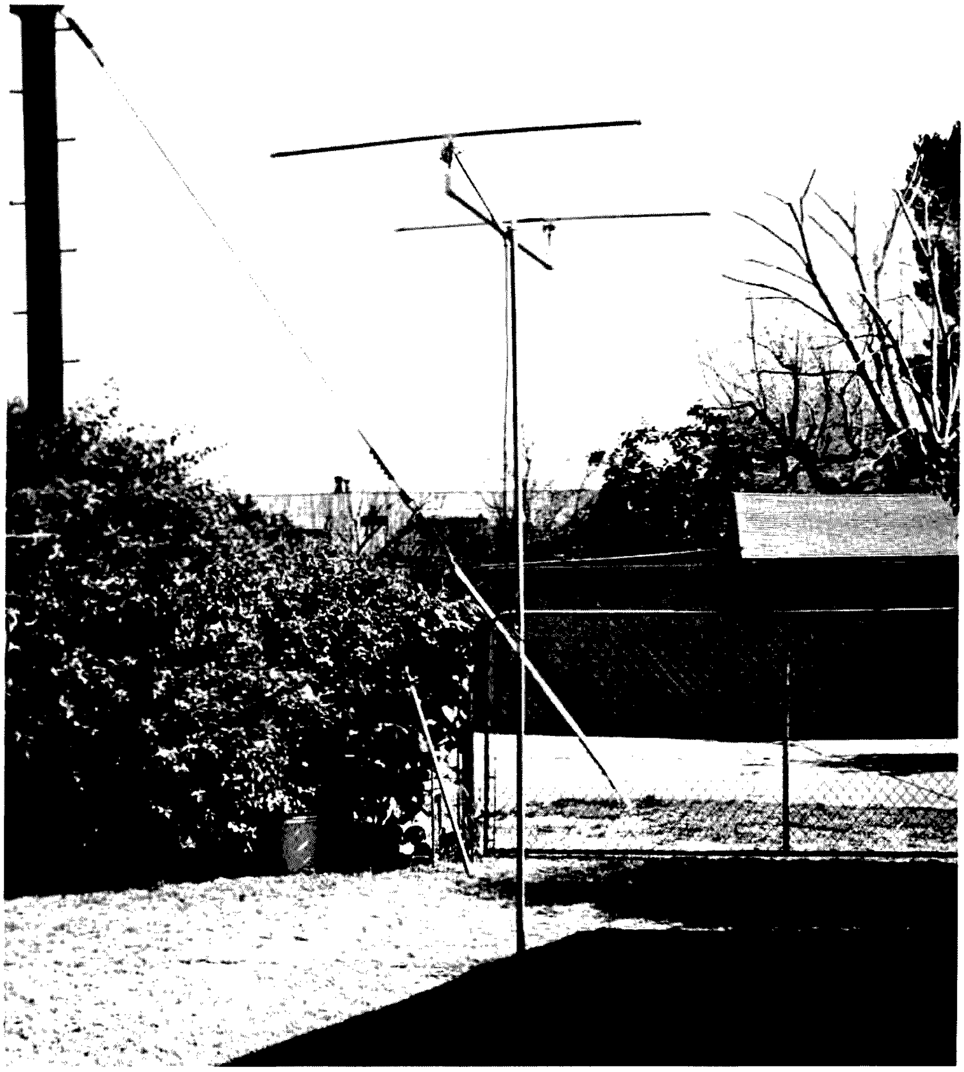

Photo D. Note the cramped quarters. I worked most DX stations at the height pictured — 11 feet.

Joseph J. Carr K4IPV
5440 South 8th Road
Arlington VA 22204

The Op Amp Encyclopedia

—part II

The operational amplifier has proven to be something of a blessing to the amateur designer because it obeys simple rules and, for the most part, is reasonably well behaved. This combination allows sophisticated circuitry to be designed by less sophisticated users. In the first part of this two part series, I covered the basics of the operational amplifier and the derivation of the commonly-seen transfer equations. In this part, I will examine the differential configuration using operational amplifiers and give a practical example.

Dc Differential Amplifiers

The fact that an IC operational amplifier has two complementary inputs, inverting (-) and noninverting (+), makes it a natural for application as a differential amplifier. These circuits produce an output voltage that is proportional to the *difference* (hence "differential") between two input voltages. Recall that the two inputs of an IC op amp have equal but opposite effects on the output. If the same (or two equal) voltage is applied to the two inputs (i.e., a *common-mode* voltage – E3 in Fig. 1), then the output voltage will be zero. The transfer equation for a differential amplifier (see Fig. 1) is:

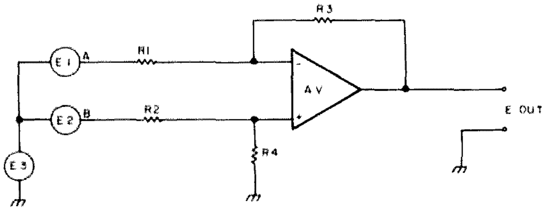

Fig. 1. Simple differential amplifier using just one op amp.

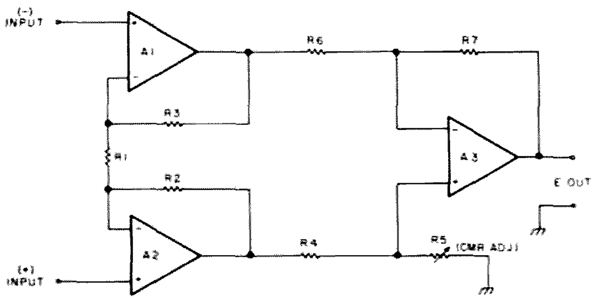

Voltage gain ($A_{v\text{-differantial}}$)	Provided that:
(1 + 2R3/R1)	R2 = R3 and R4 = R5 = R6 = R7
(1 + 2R3/R1)(R7/R6)	R2 = R3, R6 = R7, and R4 = R5
R7(R1 + R2 + R3)/R1R6	R7/R6 = R5/R4

Fig. 2. Differential instrumentation amplifier.

$$E_{out} = A_v(E1 - E2) \qquad (1)$$

So, if E1 = E2, then $E_{out} = 0$.

The circuit in Fig. 1 shows a simple differential amplifier using a single IC operational amplifier device. The voltage gain (A_v) in this circuit is given by:

$$A_v = R3/R1, \qquad (2)$$

provided that R1 = R2, and R3 = R4. The main appeal of this circuit is that it is economical, requiring just one IC. It will reject common-mode voltages reasonably well if the equal resistors are well matched. It is in this area that one of the glaring weaknesses of the circuit shows up. Even when R4 is made variable, and the two input resistors are a well-matched pair, there will be at least some common-mode gain. Adjustment is made of R4 with the two inputs (points "A" and "B") tied together. This junction is then connected to a signal source of several volts p-p amplitude. R4 is adjusted until the ac output voltage is zero.

Besides the problems occurring when common-mode rejection requirements are high, we also find this single IC differential amplifier suffering from a relatively low input impedance. In the practical world, we also find that it might tend to be a little difficult to tame if high gain is demanded of a single IC op amp. It can be done, but problems in layout are magnified that way.

In recent years, the instrumentation amplifier (I.A.) of Fig. 2 has caught on in popularity because it goes a long way toward alleviating, if not eliminating, the problems associated with the design of Fig. 1. The input stages are noninverting followers, so they will offer the characteristically high impedance input of such stages. Typical input impedance values run to as much as 1000 megohms.

The instrumentation amplifier is relatively tolerant of different resistor ratios used to create voltage gain. In the simplest case, the differential voltage gain is given by:

$$A_v = 1 + (2R3/R1), \qquad (3)$$

provided that: R2 = R3, and R4 = R5 = R6 = R7. It is interesting to note that common-mode rejection is not seriously deteriorated by mismatch of resistors R2 and R3. The only problem created by such a mismatch is an error in differential voltage gain.

The situation created by equation 3 will result in having a gain of unity (1) in amplifier A3, and that is a bit of a waste. If you want gain from amplifier A3, then equation 3 must be rewritten to include the gain factor of that stage, or:

$$A_v = [1 + (2R3/R1)] \cdot (R7/R6), \qquad (4)$$

provided that R2 = R3, R4 = R6, and R5 = R7.

One further equation that is of interest in this type of differential amplifier is the general expression from which the others may be derived:

$$A_V = [R7(R1 + R2 + R3)] / (R1 R6), \quad (5)$$

which is valid provided that the *ratio* R7/R6 = R5/R4. Equation 5 is especially nice since you need not concern yourself with matched pairs of precision resistors, but only with their ratios being equal.

Practical Circuit

I recently had a need for a dc differential preamplifier. I wanted it to operate out to almost 100 kHz. Because the two inputs were to be fed with low-level signals, they were wired with shielded cable. This would deteriorate the signal waveform because of the cable capacitance. In order to compensate for this high-frequency loss, a "capacitance-compensation" or "high-frequency-boost" control had to be designed into the amplifier. Voltage gain was to be approximately ten.

The circuit to the preamplifier is shown in Fig. 3. It is, of course, the instrumentation preamplifier of Fig. 2, with added touches. When the frequency response can be less than about 10 kHz, you may use any of the 741-family devices, including the 741, 747, 1458, and 1456 ICs. But premium performance requires a better operational amplifier. In this case, the most economical and easiest to obtain was the new RCA CA3140AH. This is a high-frequency device using the same basing as the industry standard 741 series. The technology used in manufacture of the 3140 is the RCA "Bimos" process that combines some of the best aspects of CMOS and bipolar design. The inputs are diode-protected MOSFET transistors, so the input impedance is astronomically high. The only criticism I have of RCA is that they seem to have an aversion for the popular mini-DIP (8-pin) package used by almost everybody else. The -AH suffix on the type number, though, will bring you their "DIL-pack," which is a metal can with 8 pins preformed to fit the mini-DIP socket. Common-mode adjustment is provided by potentiometer R10, which should be a ten-turn pot if you want to optimize CMRR. I used 5%-tolerance resistors with little noticeable CMRR problems that could not be "tweaked out" by R10.

The frequency response

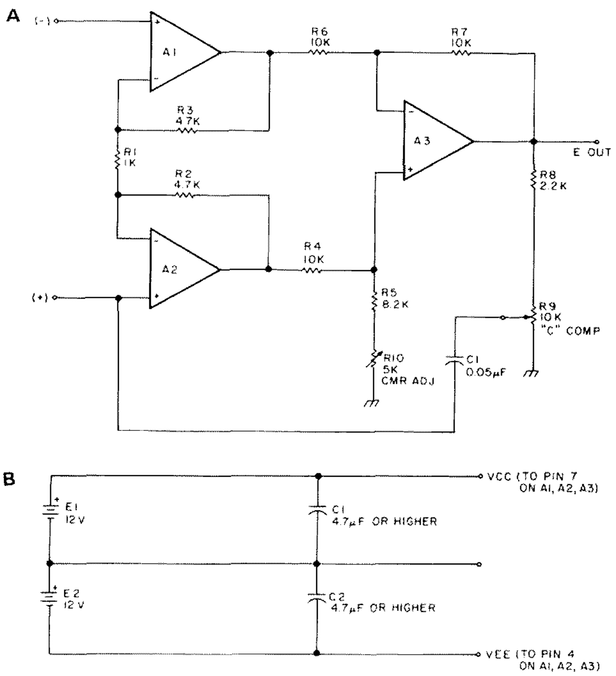

Fig. 3. (a) A gain-of-10 (20 dB) instrumentation amplifier featuring high-frequency compensation. A1, A2, A3 — RCA CA3140AH (DIL-pack). (b) Power supply required for (a).

characteristics of this preamplifier are shown by Figs. 4 to 8. The input in each case was a 1000 Hz square wave from a function generator (see *Ham Radio Horizons*, March, 1977). The waveform in Fig. 4 shows the output signal when resistor R9 is set with its wiper closest to ground. Notice that it is essentially square, showing only a small roll-off of high frequencies due to the effects of C1 shunting the (+) input to ground. The waveform shown in Fig. 5 is the same signal when R9 is at maximum resistance. This creates a small amount of regenerative feeback that is not sufficient to start an oscillation but will enhance the high frequencies.

The problem of oscillation can be quite serious, though, if certain precautions are not taken. Originally, the top of the 10k potentiometer (R9) was tied directly to the output of A3. But, when R9 was

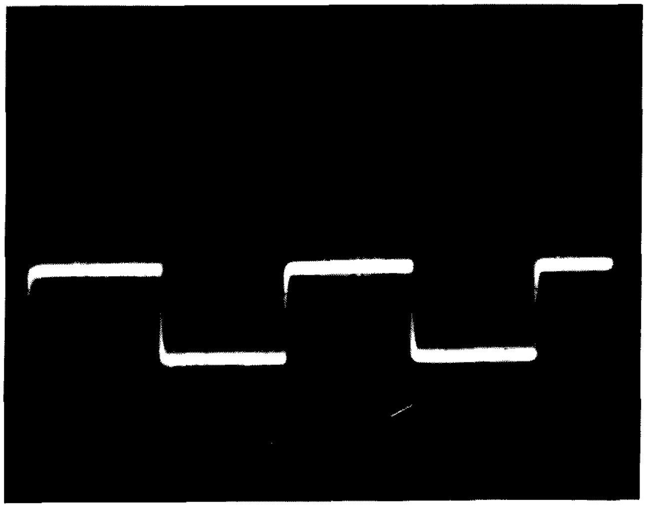

Fig. 4. 1000 Hertz square wave output when R9 [Fig. 3(a)] is set to minimum.

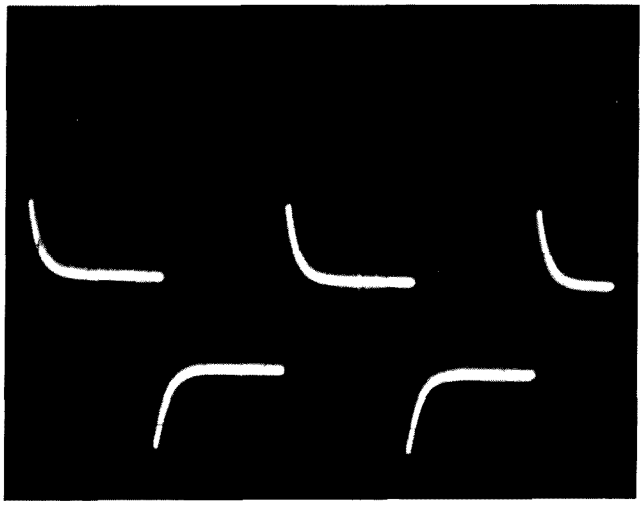

Fig. 5. Enhanced high-frequency response when R9 is set to its maximum resistance position.

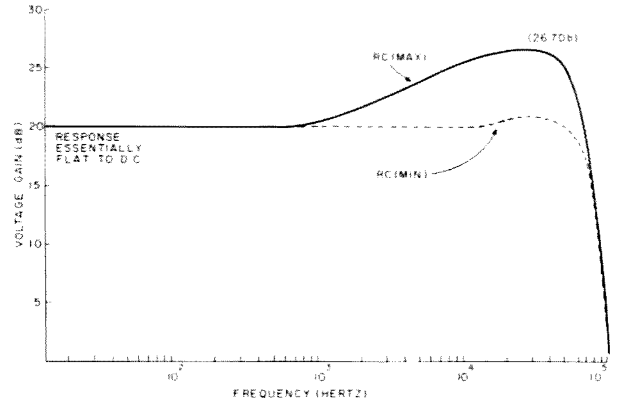

Fig. 6. Voltage gain (dB)-vs-frequency for Fig. 3(a) as actually measured.

adjusted to about half scale, the circuit would ring and produce the waveform of Fig. 7. This was cured by placing the 2200-Ohm resistor in series with the potentiometer. Another source of oscillator action is the value of capacitor C1. When a 0.001 uF or less capacitor was used, it was found that an 80 kHz constant oscillation was created (Fig. 8). The frequency response is shown in Fig. 6. To obtain any particular response, you will have to play with the values of C1 and R9, an inducement to use an oscilloscope. Other types of oscillation may show up when using high-frequency operational amplifiers. The 741 family is considered well behaved because it lacks these problems under most circumstances. It is said to be (almost) unconditionally stable. This is another way of saying that it has a limited frequency response – on the order of 10 kHz. The problem is due to phase shifts caused by the resistances and capacitances associated with the op amp – the input capacitances, for example, as well as the substrate-to-case capacitances. In the inverting-follower configuration, there is a 180° phase shift between input and output. If the phase shifts of the feedback network and input circuit conspire to add another 180° of phase shift at some frequency where the gain of the operational amplifier is greater than unity, then oscillation on that frequency will result. The cure is to reduce the voltage gain at that frequency to less than unity. One easy way is to place a small-value capacitance across the feedback resistance, or an RC network. You may also use either the lead or lag terminals, if there are such features on the particular amplifier. The 741, being a "compensated" type, does not require it. You may also elect to place an RC-series network across the input terminals. You will want to avoid using capacitors from output to ground (instability of another sort) or from either input directly to ground (noisy situation).

Applications of the Differential Amplifier

The differential amplifiers will find applications in many different situations. Of course, it should be recognized immediately that they are required wherever a differential signal voltage is found. Less obvious, perhaps, is that they are used to acquire signals or to operate in control systems in the presence of large noise signals. Many medical applications use the differential amplifier because tiny signal voltages from the body must be acquired in the presence of large 60 Hz fields from the power lines. This is also true of microprocessor or other systems which require an analog input to perform some job in the same type of environment. Let's say that you have a temperature sensor that can be treated as a differential signal. The lines bringing the dc signal from this sensor to the electronic thermometer may well be long enough to pick up 60 Hz interference. If you doubt this, then try grabbing ahold of the input to an audio amplifier or oscilloscope vertical amplifier. It is quite possible to pick up substantial 60 Hz voltages. Various authorities quote figures from 10 mV to 100 mV per foot of unshielded cable. There are even mechanisms where shielded cable is ineffective. The differential amplifier, however, sees the 60 Hz signals on the two input lines as a single common-mode signal. It will therefore reject the 60 Hz interference and accept the transducer input signal. This signal is then amplified and can be applied to the instrument or an A/D converter in a microprocessor system.

Another application, which is perhaps related to that just discussed, is amplification of the output of a Wheatstone bridge, and this is shown in Fig. 9. If one side of the bridge's excitation potential is grounded, the output voltage is a differential voltage. This can be applied to the inputs of a differential or instrumentation amplifier.

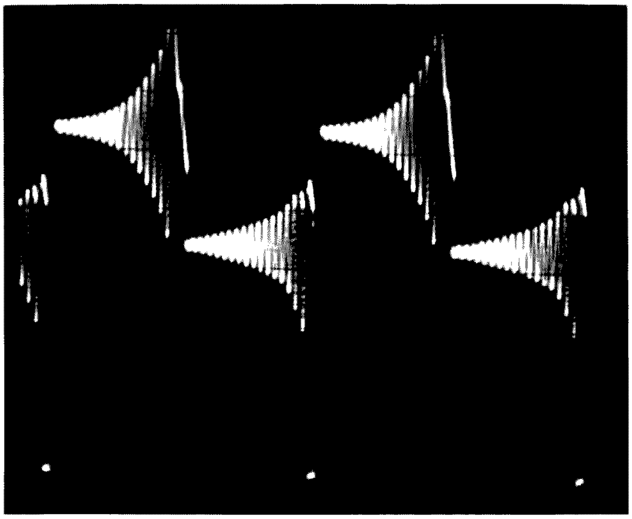

Fig. 7. Ringing will occur if R8 is too small.

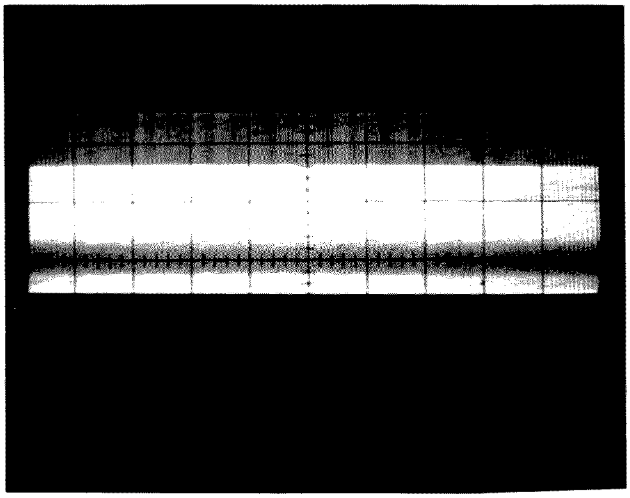

Fig. 8. An 80 kHz oscillation resulting from use of too small a value for C1.

One use for this is to make bridges sensitive to null conditions without having to obtain an expensive 50 or 10 uA meter movement. In addition, the overall sensitivity can be controlled at a later stage (see Fig. 10) by a simple gain control.

A "rear end" useful for almost all operational amplifier instruments and projects is shown in Fig. 10. This circuit consists of three type 741 operational amplifier IC devices. Since they will follow most of the circuit gain, these low-cost devices will suffice even in critical designs. The pinouts shown are for the mini-DIP and metal can cases. Input amplifier A1 can be made to have any gain desired by varying R2. If you want the entire stage to have unity gain, then make R2 = 10k Ohms. The gain of our rear end is given by R2/10,000. The second stage is the gain or sensitivity control. It has a unity gain when R4 is at maximum resistance.

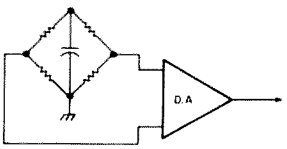

Fig. 9. Wheatstone bridges are made more sensitive if the output is passed through a 20 or 40 dB dc differential amplifier. The output indicator could then be almost any zero-center voltmeter, or a current meter with a series multiplier resistor.

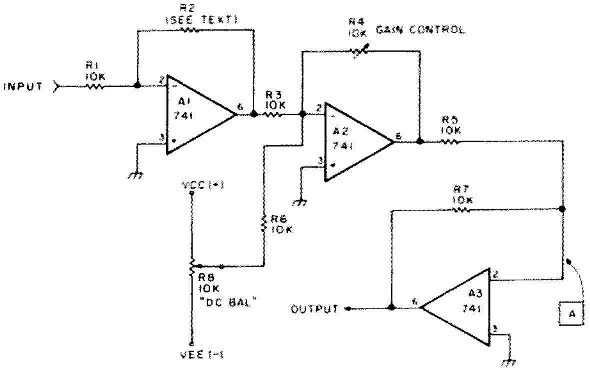

Fig. 10. Universal rear end for operational amplifier projects.

In order to keep the baseline (zero point) from shifting as the gain control is varied, include a dc balance control. This is used to cancel any collective offset voltages from preceding stages. Set the input voltage equal to zero (not at A1, but at the earliest stage in the chain – remember this is an output circuit), and then tweak R8 so that there is no shift in output voltage as the gain control (R4) is varied through its entire range. A dc-coupled oscilloscope or zero-center VTVM is best for this purpose. Avoid digital voltmeters. If you want to give the output some fixed-zero reference other than 0 V dc, or want a "position control" when using this circuit on an oscilloscope or chart recorder, then put a second network, such as R6/R8, at point A.

If RCA CA3140AH operational amplifiers, or some other high-frequency type, are substituted for the 741s specified, and the circuit is connected to a circuit such as Fig. 3(a), then you will have a nice differential preamplifier good up to 100 kHz for a low-cost oscilloscope. Such instruments rarely have more than a single 100 kHz (or slightly better) single-ended vertical amplifier. This project will make it a differential input such as might be found on much more expensive instruments. ■

Social Events

WHEATON IL
FEB 5

The Wheaton Community Radio Amateurs will hold their 16th Annual Midwinter Swap & Shop on Sunday, February 5, 1978, from 8 am to 5 pm, at the DuPage County Fairgrounds on Manchester Road (near County Farm Road) on the west side of Wheaton, Illinois. Some tables will be provided, but bring your own if possible. The WCRA invites anyone with an interest in buying or selling new or used electronic equipment to attend this hamfest, which will be inside four large heated buildings at the fairgrounds. Advance tickets (available until January 23) are $1.50, and tickets at the door are $2.00. Checks should be made payable to the club. Write Don Snyder WB9VFC, 623 Meadows Boulevard, Apartment 3C, Addison IL 60101.

MANSFIELD OH
FEB 5

The Mansfield, Ohio, Mid-Winter Hamfest and Auction will be held on February 5, 1978, at the Richland County Fairgrounds, Mansfield, Ohio. Prizes, flea market, auction. Large heated buildings. Doors open at 8 am. Talk-in on 146.34/146.94. Tickets $1.50 in advance, $2.00 at the door. Contact Harry Frietzhen K8HF (K8JPF), 120 Homewood, Mansfield OH 44906, or phone (419)-529-2801 or (419)-524-1441.

TRAVERSE CITY MI
FEB 11

The Cherryland Amateur Radio Club's 5th Annual Swap n' Shop will be held on Saturday, February 11, 1978, from 9 am to 4 pm, at Northwestern Michigan College in Traverse City, Michigan. Donations are $1.00 in advance or $1.25 at the door. Free display tables for electronic equipment and parts. Everyone is welcome. For more information, write to Greg North WB8TPR, Box 115, Lake Leelanau MI 49653.

WOODBRIDGE NJ
FEB 11

The New Jersey FM Repeater Association of Woodbridge, New Jersey, will hold its annual Valentine Dinner Dance on Saturday, February 11, 1978, at 8 pm at the Masonic Temple on Green Street, Woodbridge, New Jersey. There will be talk-in on 146.22/82. This is New Jersey's largest all-ham dinner dance. This year's gala event will feature a sit-down roast beef dinner, an open bar, and music by the nationally-known band of Frank Mattafore K2KVT. Advance registration of $25.00 per couple is required by January 20, 1978. For reservation information, contact: Sid Lieberman WA2FXB, 146 Grove Avenue, Woodbridge NJ 07095, (201)-634-8955; Bob Boehmer WA2JDU, 536 Barron Avenue, Woodbridge NJ 07095, (201)-636-3947; or Bob Best WB2JDU, 712 New Dover Road, Edison NJ 08817, (201)-382-9625. Please make all checks payable to NJFMRA.

LANCASTER PA
FEB 26

The annual Lancaster Hamfest will be held Sunday, Feb. 26, 1978, from 9 am to 5 pm at the Farm & Home Center, 1383 Arcadia Rd., Lancaster PA. Donation $2.00; no additional fee for indoor tables or tailgating; XYLs and kids free. Food will be available; door prizes will be given away. Talk-in 146.01/.61, 146.52, 222.70/.30. Dealers invited. For further details, write Sercom, P.O. Box 6082, Rohrestown PA 17603.

LIVONIA MI
FEB 26

The Livonia Amateur Radio Club would like to announce that the 8th Annual LARC Swap 'n Shop will be held on Sunday, February 26, 1978, from 8:00 am to 4:00 pm at the Stevenson High School in Livonia, Michigan. There will be plenty of tables, door prizes, refreshments, and free parking. Talk-in on 146.52 simplex. For further information, write Neil Coffin WA8GWL, c/o Livonia Amateur Radio Club, PO Box 2111, Livonia MI 48150.

BYRAM CT
FEB 26

Dimar Electronics of Greenwich will hold its first annual "Midwinter Hamfest" at the Byram Veterans Hall on Delavan Avenue in Byram, just off the Connecticut Thruway at Exit 2. Doors open at 0900 local. Talk-in on 52-52. Admission is $2.00 at the door. Table space is $1.50 per half table. Sellers will be asked for small equipment donation for door prizes/raffles. Advance reservations for space should be sent to Dimar Electronics, 234 Mill Street, Byram CT 06830, (203)-531-8257.

CUYAHOGA FALLS OH
FEB 26

The Cuyahoga Falls Amateur Radio Club's 24th Annual Electronic Equipment Auction and Flea Market will be held on Sunday, February 26, at North High School, Akron OH, from 9 am to 4 pm. Tickets are $1.50 in advance, $2.00 at the door. Bring your own tables; some will be available at $1.00 each. Refreshments will be available. 5 main prizes, including the grand prize, a Triton IV. Plenty of room for buyers and sellers – over 32,000 sq. ft. Easy access – located on Tallmadge Ave. at off ramp of North Expressway (Rt. 8). Check in on 146.52, 146.04.64, 147.84.24, 223.5. CFARC, PO Box 6, Cuyahoga Falls OH 44222.

propagation

by
J. H. Nelson

EASTERN UNITED STATES TO:

GMT:	00	02	04	06	08	10	12	14	16	18	20	22
ALASKA	14	7	7	3	3	3	3	3	7	14	14	14A
ARGENTINA	14	7B	7B	7	7	7	14	14	14A	21	14A	14
AUSTRALIA	14A	14	7B	7B	7B	7	7	14	14	14B	14	21
CANAL ZONE	14	7	7	7	7	7	7A	14	21	21	14A	14
ENGLAND	7	7	7	3	7	7	7A	14A	14A	14	14	7
HAWAII	14	14	7B	7	7	7	7	7	7B	14	14A	14A
INDIA	7	7	7B	7B	7B	7B	7B	14	14	7B	7B	7
JAPAN	14	7B	7B	7B	7	7	7	7	7	7B	7B	14
MEXICO	14	7	7	7	7	7	7	14	14A	21	14A	14
PHILIPPINES	14	7B	7B	7B	7B	3B	7	7	7	7B	7B	7B
PUERTO RICO	7A	7	7	7	3A	3A	7A	14	14	14	14	14
SOUTH AFRICA	7A	7	7	7	7B	7B	14	14A	21	21	14A	14
U.S.S.R.	7	7	3	3A	7	7B	14	14	14	7B	7B	7
WEST COAST	14	14	7	7	7	7	7	14	14	14A	21	14A

CENTRAL UNITED STATES TO:

GMT:	00	02	04	06	08	10	12	14	16	18	20	22
ALASKA	14	14	7	3	3	3	3	3	7	14	14	14A
ARGENTINA	14	14	7B	7	7	7	7	14	14	14A	21	14A
AUSTRALIA	21	14	7B	7B	7B	7	7	7	7A	14B	14	14A
CANAL ZONE	14	14	7	7	7	7	7	14	14A	21	21	14A
ENGLAND	7	7	7	3	7	3	7B	14	14A	14	7B	7
HAWAII	14A	14	7B	7	7	7	7	7	7B	14	14A	21
INDIA	7	7A	7B	7B	7B	7B	3B	7A	14	7	7B	7B
JAPAN	14	14	7B	7B	7	7	3	7	7	7B	7B	14
MEXICO	14	7	7	3A	7	3	3	7	14	14	14	14
PHILIPPINES	14	14	7B	7B	3B	7B	7	7	7	7	7B	7B
PUERTO RICO	14	7	7	7	7	7	7	14	14A	14A	14	14
SOUTH AFRICA	14B	7	7	7	7B	7B	7B	14	21	14A	14A	14
U.S.S.R.	7	3	3	3	7	7	7B	7A	14	7B	7B	7B

WESTERN UNITED STATES TO:

GMT:	00	02	04	06	08	10	12	14	16	18	20	22
ALASKA	14	14	7	3	3	3	3	3	7	14	14	14
ARGENTINA	14A	14	7B	7	7	7	7	14	14	14	14A	21
AUSTRALIA	21	21	14	7B	7	7	7	7	7	7A	14	14A
CANAL ZONE	14A	14	7	7	7	7	7	14	14A	21	21	14A
ENGLAND	7	7	7	3	7	7	3B	7B	14	14	7B	7B
HAWAII	21A	14A	14	7	7	7	7	3A	7	14	14A	21
INDIA	7B	14	14B	3B	3B	3B	3B	3A	7	7	7B	7B
JAPAN	14A	14	14	7	7	7	7	3	7	7	7B	14
MEXICO	14	14	7	7	7	7	7	7	14	14A	14A	14A
PHILIPPINES	14A	14	14	7B	3B	7B	7B	3A	7	7	7B	14
PUERTO RICO	14	7A	7	7	7	7	7	14	14A	21	21	14A
SOUTH AFRICA	14B	7	7	7	7B	7B	7B	7B	14	14A	14A	14
U.S.S.R.	7	7	3	3	3	7	7	7	7A	7A	7B	7B
EAST COAST	14	14	7	7	7	7	7	14	14	14A	21	14A

A = Next higher frequency may also be useful
B = Difficult circuit this period
F = Fair
G = Good
P = Poor

february

sun	mon	tue	wed	thu	fri	sat
			1 G	2 F	3 F	4 G
5 G	6 G	7 F	8 F	9 G	10 G	11 G
12 G	13 G	14 G	15 G	16 F	17 P	18 P
19 F	20 F	21 P	22 F	23 G	24 G	25 G
26 F	27 F	28 F				

MOVING?

Let us know 8 weeks in advance so that you won't miss a single issue of 73 *Magazine*.
Attach old label where indicated and print new address in space provided. Also include your mailing label whenever you write concerning your subscription. It helps us serve you promptly.

Write to: **73 magazine**
Peterborough NH 03458

- ☐ Address change only
- ☐ Extend subscription
- ☐ Enter new subscription
- ☐ 1 year $15.00
- ☐ Payment enclosed (1 extra BONUS issue)
- ☐ Bill me later (I've signed below)

Signature ____________________

AFFIX LABEL

If you have no label handy, print OLD address here.

name ____________________ call __________

address ____________________

city __________ state __________ zip __________

name ____________________ call __________

address ____________________

city __________ state __________ zip __________

March 1978 $2.00

73 AMATEUR RADIO

Don't Miss the Petition on page 10

PLUS 32 More Exciting Feature Articles
(see page 5)

73

#210 MAR 1978

73 Magazine is published monthly by 73, Inc., Peterborough NH 03458. Subscription rates in the U.S. and Canada are $15 for one year, $26 for two years, and $36 for three years. Outside the U.S. and Canada, write for rates. Second class postage paid at Peterborough NH 03458 and at additional mailing offices. Publication No. 700420. Phone: 603-924-3873.

INCLUDE OLD ADDRESS AND ZIP CODE WITH ADDRESS CHANGE NOTIFICATION

Microfilm edition — University Microfilms, Ann Arbor MI 48106.

73 STAFF

EDITOR/PUBLISHER
Wayne Green W2NSD/1

EXECUTIVE VICE PRESIDENT
Sherry Smythe

ASSISTANT EDITOR/PUBLISHER
Morgan W. Godwin W8WFL

ADMINISTRATIVE ASSISTANT
Dotty Gibson

MANAGING EDITOR
John C. Burnett

ASSISTANT MANAGING EDITOR
Susan G. Philbrick

EDITORIAL ASSISTANT
Beth Finn-Weston

I/O EDITOR
John Craig

PUBLICATIONS EDITOR
Jeffrey D. DeTray WB8BTH/1

PRODUCTION MANAGER
Lynn Panciera-Fraser

ART DEPARTMENT
Craig Brown
Gayle Cabana
Bob Drew
Michael Murphy
Weston Parker
Bob Sawyer
Noel R. Self WB1ARP
Robin M. Sloan

BOOK PRODUCTION
Cynthia Gray

PRINT SHOP MANAGER
Michael Potter

PRINTING
William Cering
Dwight Perry

PHOTOGRAPHY
Bill Heydolph
Tedd Cluff

TYPESETTING
Barbara J. Latti
Pauline Makarsky
Jennifer Johnston
Mary Kinzel
Marie Walz

COMPTROLLER
Knud E. M. Keller KV4GG/1
Frances Mason
Nancy Dupuis
Cecile Ferreira

CIRCULATION
Barbara Block
Fran Dillon
Florence Goldman
Becky Warren
Rhonda Ramsey

DATA ENTRY
Judy Waterman
Judy Brumaghim
Valerie Horn
Dominique Smith
Linda Cate

MARKETING DIRECTOR
Sherry Smythe

MARKETING MANAGER
Jack Sheehan

SHIPPING
Theresa Toussaint
Sue Chandler
Ethan Perry
Maureen Toussaint

PLANT MAINTENANCE
Bill Barry
Michael Coutu
Lorraine Pickering

RECEPTIONIST
Doni Jarvis

ASSOCIATES
Robert Baker WB2GFE
E. H. Barnett W6OKX
Schley Cox WB9LHO
Tom DiBiase WB8KZD
Terry Fox WB4JFI
W. Sanger Green
Dave Ingram K4TWJ
Larry Kahaner WB2NEL
Joe Kasser G3ZCZ
Bill Pasternak WA6ITF
John Schultz W4FA
Walter Scott K8DIZ
Peter Stark K2OAW
Bill Turner WA0ABI

COMPUTER PROGRAMMING
Richard J. Dykema
Ron Cooke
Steven B. Lionel

ADVERTISING
Aline Coutu
Mary Jo Spanweiler
Heidi Kulish
Marcia Stone

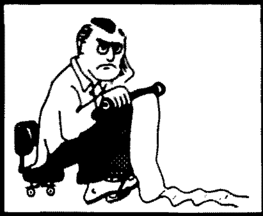

...de W2NSD/1

EDITORIAL BY WAYNE GREEN

COMPUTERIZED HEADACHE

Along in early 1975, when it became obvious that we were spending more money buying computer service to handle our subscriptions than it would cost to do the same job at *73*, we started shopping for a computer.

It was the frustration of this search which resulted in our starting *Byte* magazine and then *Kilobaud*. The search continued on into 1976 and eventually our data processing "expert" settled on a Prime computer system. Prime is a small outfit in Framingham, Massachusetts, a spin-off of people from Honeywell.

After some six months of in-house programming of the Prime system to handle subscriptions, the data processing department announced that they were ready to take over the *73* mailing list. What followed during the next few months was a disaster. Subscriptions, renewals, billing, address changes – all were screwed up and attempts to get things straight were frustrated. The excuses flew fast and furious . . . the system kept breaking down . . . too damp . . . too hot . . . too dirty . . . lousy programs . . . and so forth.

We finally gave up and moved the subscriptions back to an outside contractor and set about rewriting the programs and seeing what could be done about the constant equipment failures. Getting rid of the head of the department, an incurable smoker, coincided with an end to equipment failures . . . mostly disk head crashes. Recent failures have been few.

Eventually we'll try handling subscriptions here at *73* again . . . when we're sure things are ready for it.

My apologies and many more from everyone at *73* for any difficulties subscribers have had. Everything is working smoothly right now, but we'll probably screw it up again. On the bright side, we think everyone eventually got all of the *73* issues.

ARRL WAFFLING

The Amateur Radio Manufacturer's Association met at Las Vegas in early January and put the ARRL on the spot. Present were Lee Aurick, the *QST* advertising manager, and Baldwin, League Poo Bah. The January *QST* editorial said that the ARRL had had nearly a hundred firms sign their Code of Ethics. Since not one of the manufacturers in ARMA had signed it, they demanded to know who the hundred were. Aurick didn't remember . . . not even one single name. Baldwin also had a sudden attack of memory loss. When pushed hard, he admitted that no manufacturers had signed up, and said that he thought they had had signatures from a number of small dealers. After the meeting, I tried to find one single person who believed either Aurick or Baldwin. No luck.

The general impression of the audience was that the January *QST* editorial was a self-serving bunch of baloney.

SAROC

Fewer and fewer hams seem to be coming to this tired and boring hamfest. More and more hams complained to me that even though they had confirmed prepaid reservations at the hotel, they still were turned away. Not many hams want to pay $16 (plus another $16 for the wife) just to see a handful of exhibits . . . with virtually no program. SAROC is run during the dead season at Vegas, with the result that the shows are dull. Everyone was grumbling about the lack of names. A few days later, the stars came to Vegas.

One of the largest ham dealers in the country said that this was positively the last time he would ever exhibit at SAROC. Vegas is a long and expensive way from anywhere, so most of the hams who do go are there more for Vegas than for any hamfest. It's a curious crowd.

I stopped bothering to have a booth at SAROC several years ago. Now I stop off there every couple of years just to see if it is getting better. My own feeling is that the hamfest has been going downhill for six years . . . ever since the heyday of FM. If the Winter Consumer Electronics Show and Personal Communications Show hadn't been at Vegas at the same time, I wouldn't have bothered this year.

CODE OF ETHICS

It is unfortunate that a lot of amateurs are so emotionally involved with this business of CBers. I bow to no one in my love of amateur radio and my interest in its survival, yet I have some serious reservations about the Code of Ethics.

Firstly, I'd sure like to hear some tapes of CBers invading our 10m band. I've talked to a couple of hams who have heard this happen with their own ears, but most of the stories I've heard have been tenth hand and not very credible. It is interesting that the FCC has come out with a statement in writing that there is no significant problem with CBers coming into the ham bands. Despite the terror that this possibility brings to many amateurs, the fact seems to be that this is imaginary.

Okay, but what about the hundreds of thousands of CBers who are using ham gear for DXing in the HF band, those frequencies between 27.5 and 28 MHz? What about them? If the FCC considers this a serious problem, then I suspect they would ask for some help in solving it. Despite my many suggestions that they get hams to help with this, the FCC has been strangely silent. I asked the FCC at a recent media meeting whether HFers were interfering with any other service and they said no. I suggested that either the FCC come to grips with the problem . . . possibly enlisting the aid of amateurs and ham clubs . . . or else legalize the HF band . . . the way they did rag chewing on the CB channels.

Let's suppose the FCC starts having trouble with the CAP operators . . . that they start spilling over into adjacent channels. Should amateurs take this as their personal responsibility to cure? Suppose the police operators start using bad language on their channels . . . should hams get involved to clean this up? The Citizens Band service is just as separate as CAP, police, or any of a hundred other services . . . so why do hams feel a responsibility to get involved?

If the HFers were buying up ham gear to the extent that hams couldn't get it, I might get my back up. If they were turning up in the ham bands in any numbers, I'd get all upset. If the FCC asked hams to help them curb this unlawful bunch, I'd be delighted

READER RESPONSIBILITY

One of your responsibilities, as a reader of *73*, is to aid and abet the increasing of circulation and advertising, both of which will bring you the same benefit: a larger and even better magazine. You can help by encouraging your friends to subscribe to *73*. Remember that subscriptions are guaranteed – money back if not delighted, so no one can lose. You can also help by tearing out one of the cards just inside the back cover and circling the replies you'd like to see . . . catalogs, spec sheets, etc. Advertisers put a lot of trust in these reader requests for information.

To make it even more worth your while to send in the card, a drawing will be held each month and the winner will get a LIFE subscription to *73!*

Please copy *Please copy* *Please copy* *Please copy* *Please copy* *Please copy* *Please copy*

FIGHT THE DICTATORSHIP!

Rick Cooper, who operates out of a post office box in southern California, says he has over two million petitions backing him in his drive to take the ham bands and give them to the CBers. When he was asked about the structure of his group, which he claims has over 7,000 local officers around the country, he answered: "It's a dictatorship and I'm the dictator."

Cooper further claims that he has received over 100,000 paid ($25 each) subscribers to his Communications Attorney Service (not to be confused in any way with the Personal Communications Foundation) ... if so, he has plenty of money to back up his seemingly outrageous demands.

Amateurs have a choice right now ... ignore all this and take a chance that Cooper may not be able to use all that money and the millions of petitions to get Congress to go along with him ... or FIGHT BACK! If you are willing to live with a dictatorship, then no problem. If you want to do something about this ... you can ... right now.

Cooper has been getting his millions of petitions via a chain letter system ... and we can do the same. If you will make at least five copies of the petition below, get five other people to sign them, and send them to me, I'll see that they are used where they will do the most good.

When the FCC refused to listen to us back in 1973, we got thousands of ham petitions and presented them to the FCC at a hearing – and it changed the whole rules and regulations picture completely. We can do it again, but we need hundreds of thousands or even millions of petitions this time. We need petitions from amateurs, from friends, family, neighbors, co-workers ... everyone. We don't want to be run over roughshod by a dictator ... we must fight back ... fight back in the way Congress and the FCC understands – votes. Vote for amateur radio by sending in a petition right now ... and then get as many copies signed and sent in as possible. Flood me with them.

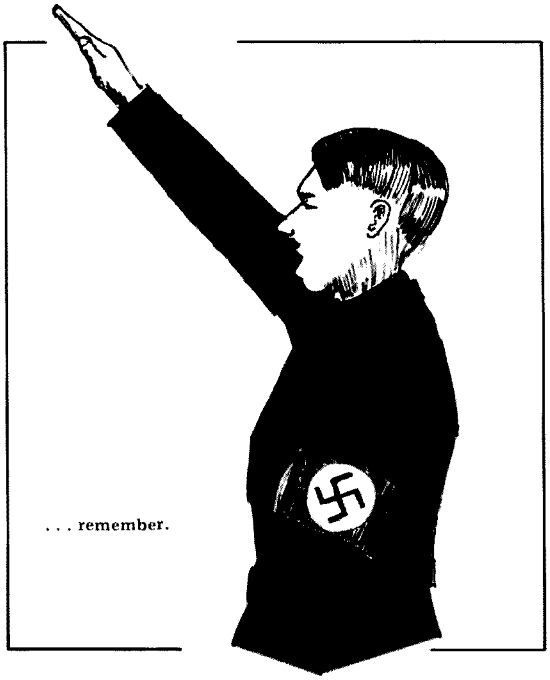

... remember.

Your *only* registered lobbyist for amateur radio is me ... Wayne Green. I am the only person officially authorized to represent you before Congress. With your petitions in hand, our voice will ring out loud and clear in Congress and with the FCC. This is your big chance to back up amateur radio ... if you want to see it like it is instead of the way dictator Cooper wants.

Chain Letter Petition in Support of Amateur Radio

Before doing anything else, make at least five photocopies of this petition and give or send these copies to friends, neighbors, radio club members, hams you have contacted, etc. They do not have to be radio amateurs, but just people who realize the importance to the community, to our country, and to the world of amateur radio. We don't want to lose our bands to CBers and a dictatorship.

The Petition

We, the undersigned, being American citizens, do hereby indicate our support of amateur radio and our opposition to any efforts to destroy this valuable service. Since radio amateurs have been directly responsible for developing and pioneering virtually every communications technique in use today, furnish an invaluable source of engineers and technicians for our government and industry, and furnish efficient communications during any emergencies, we cannot afford to let this important resource be wiped out.

Name__________ Address__________ City______ State____ Zip______

Name__________ Address__________ City______ State____ Zip______

Name__________ Address__________ City______ State____ Zip______

Name__________ Address__________ City______ State____ Zip______

Name__________ Address__________ City______ State____ Zip______

Support this political action to preserve amateur radio. Send your petition to:
Wayne Green
73 Magazine, Peterborough NH 03458

73/3/78

to pitch in. But the fact is that outside of having a lot of fun and being a major source of new hams, the HFers are not doing much harm.

Speaking of new hams, I'm getting more and more reports from clubs with ham classes that HFers make by far the best hams . . . that they seldom drop out of classes. Almost 100% of the newcomers to hamming are CBers and about 75% of them in many areas are HFers . . . who are, for the most part, the elite of the CB gang.

The pages of *73* are open for ideas and argument on this . . . but not to emotional bigoted blasts. The above is the bottom line of the input I've had on the situation . . . I'm always open for more data.

A CHALLENGE

Frankly, in a way I'm disappointed that the CB pirate menace has turned out to be mostly smoke. This is the sort of thing which could help to bring amateurs together and perhaps rekindle pride in amateur radio in the hearts of some of our more lost souls. I had in mind that clubs could have the fun of getting turkey hunting teams set up . . . something which would be fun and a challenge . . . teams which could design and build direction-finding equipment to quickly hunt down the invaders. For years the Russian amateurs have gone about this aspect of amateur radio in a big way, complete with national finals in Moscow for top teams. I think American amateurs, if they would take an interest in transmitter hunting, would soon come up with circuits and techniques which could win any international contest.

A couple of New Orleans readers got very hot under the collar when they felt I put them down for taking so long to catch the two hams who had been jamming their repeater with bad language. I would rather they respond with the full story of their hunt and the difficulties involved instead of keeping the whole thing a secret. Sure, it's hard to track down two moving turkeys who are alternating transmissions, but if the FCC has instant direction-finding equipment, then there is nothing to stop hams from building the same . . . or better. I'd love to have articles in *73* on the latest in DF gear . . . it might get things moving.

BE NICE

Should you run across a CBer who is trying out a ham band, whether it is someone who has bought a 2m rig at a flea market, someone blundering on our new channelized 10m band, or a wandering HFer, why not try a friendly first approach? Explain the situation and offer to get the chap into a local ham class. Tell him that not only is it illegal for him to use a ham channel, but also that hams get very uptight over this and just won't allow it. You might go into how proud hams are of their self-policing reputation and invite him over for a visit and further details. With most people, being nice helps a lot.

DECEMBER WINNER

"Run, Sheila, Run!", a super story about real-life radio control, up and ran away with our December Best Article contest, so Edward Mulvin WBØIFF will be receiving a bonus of $100 from us for writing the article. Don't forget to vote for your favorite article every month by filling in the appropriate slot on our Reader Service card at the back of the magazine. *You* get the info you request from advertisers, and you might also help your favorite author pick up a quick hundred. A no-lose proposition for only 13¢!

Ham Help

I have been interested in QRP circuit diagrams for some time now and am looking for the diagram for the Herring-Aid 5, the plans for which appeared in the July, 1976, *QST*. I also need the Tuna-Tin 2 circuit which appeared in the May, 1976, *QST*. I have been trying to get on the air on a budget and haven't yet succeeded. I am 15 years old and have been having trouble trying to find QRP circuits, and would greatly appreciate them.

I am also having trouble trying to find an i-f module (J.W. Miller 8902-B) for the HF receiver described in the December, 1977, issue.

David Gagne WB1DCR
143 Millville St.
Salem NH 03079

I would like to get in touch with other Orthodox Jews interested in a net and/or hobby computers.

David Eisenberg WB2LQQ
POB 358, Cath. St. Stn.
New York NY 10025

I am working on my Novice license and am attempting to restore a B&W 5100S transmitter and sideband adaptor, although the latter can wait awhile. I am also working on a Hallicrafters Skyrider 32 receiver.

I would appreciate any information, particularly schematics and alignment procedures, on either or both. Of course I will cover any costs involved.

F. L. McClellan
8007 Peach Point
San Diego CA 92126

I am a newsstand purchaser of your *73 Magazine* for ham radio and enjoy it very much while pursuing my hobby.

My Allied radio model A2517 transceiver takes about 20 minutes to put out signals on USB, LSB, and CW. In the receive condition, the audio output is very low, after changing the tubes and transistors. I would like to hear from anyone who has similar problems.

Clarence Grimm W9NJZ
193 S. Mason St.
Bensenville IL 60106

Do you have any technical information on the famous National SW-3-3 tube receiver that came out back in the '30s? I had one back in '38 when I was first licensed, and I wanted to try and build one up if I could get some dope on it. I do have the manual, but that doesn't give much dope on building it, information on the coils, etc. If you have anything that is available, please let me know as I would like to obtain it. Or, could you tell me where I might find one of the little sets?

Olen Craig W6DIG
2248 Gale Ave.
Long Beach CA 90810

I wonder if one of the solid state experts can give me a bit of info. I would like very much to find a source from which I can buy some series ME8900 tone generator ICs, such as those manufactured by Microsystems International of Ottawa, Canada. Does anyone know of a retailer who handles them, or the mailing address of Microsystems Int.?

Any help will be appreciated.

Almon A. Gray W1KA
RFD Box 67A
Brooksville ME 04617

Help! I've just passed my code test and am anticipating passing the written test for my Novice ticket. I bought a Hammarlund model HQ 110-C receiver. Do you know of anyone that may have operator instructions, manuals, schematics, etc., for this receiver?

D. E. Eaton
Box 334
Levittown PA 19058

CQ Morgantown, West Va. — I would like to set up a phone patch schedule to contact my brother in Morgantown. Name the best day, time, and band, and I'll be there! Drop me a note to arrange a sked.

Fred Goldenson K9TOS
311 Devlin Court
Naperville IL 60540

Several years ago, I purchased a Hallicrafters model HT-40 transmitter from an amateur friend of mine who could not locate the schematic diagram or any information on the unit.

The transmitter is defective and I need a schematic to insure that my repairs will conform to the original circuitry.

I am willing to pay a reasonable amount for a true and legible circuit, copy or otherwise.

Frank Galdes W3EEV
3675 Forbes Trail Dr.
Murrysville PA 15668

W1BNN

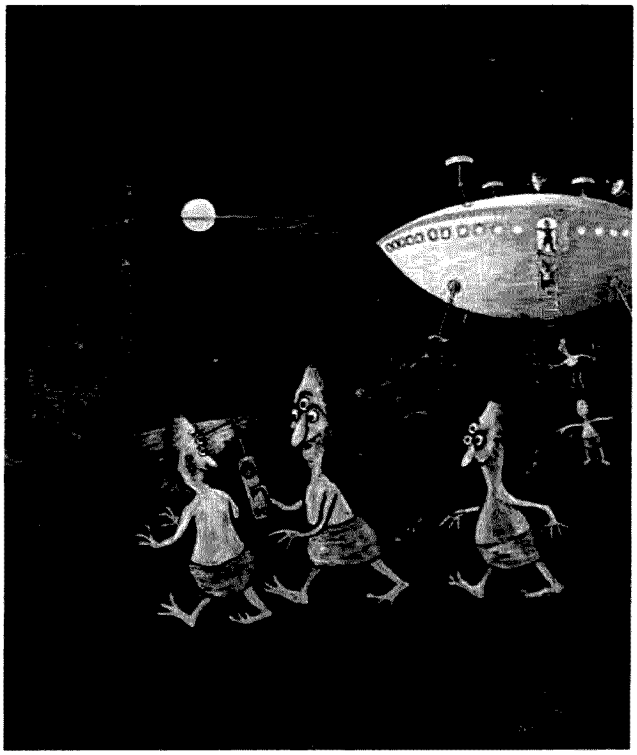

"Now remember, you guys, these hams and their people only have two eyas. Don't embarrass them by staring."

BLEEP?

The amateur fraternity is presently experiencing the most activity on 2 meter FM in our history, and it most probably will increase. We have shown, by our use of the band, that we like this means of local communication.

For some reason of which I am unaware, we don't use the letters CQ on two meter FM. We say "monitoring the frequency," "listening on 94," "QRZ the frequency" (which is totally incorrect), etc. We could, of course, state that we are looking for a contact, but I have seldom heard that done.

I would suggest that possibly some word or combination of letters be used on 2 meters to indicate that we would like a contact with some station that may be listening. Perhaps the innocuous word "Bleep" might be used to indicate our desire for a contact. One could simply say "W5XXX Bleep." This would keep it short and, if locally or nationally recognized, would accomplish the purpose desired.

Perhaps other readers can suggest something more appropriate. I submit this for your comment and possible generation of other ideas or discussion on the subject.

Bob McClain W5QFH
Oklahoma City OK

Um, yes, Bob . . . what happened here was that CQ Magazine *was about the last of the ham magazines to recognize two meter FM . . . so naturally the FMers would rather stay off the air than call "CQ." There has been a move to have FMers call "73" as a general call, but we have not encouraged this recognition of the part played by 73 in the popularizing of FM and repeaters. – Wayne.*

TRACING THE BERTANI

Ken Cole W7IDF
PO Box 3
Vashon WA 98070

Dear Ken,

I wonder if I have the answer to your question, "What happened to Paolo of the *Agostino Bertani?*"

Idly leafing through some old magazines left on the mess table, as an old ex-amateur I was interested to see that someone had left a copy of *73* (the November, 1976, edition). I took it back to my bungalow to read and came across your article.

I was particularly interested, as I sailed on the *Agostino Bertani* from Mombasa to Genoa in September, 1961. She was the same, and while on board, as a passenger, I got this story from the Italian master: She was still with the Lloyd Tristino Line and registered in Genoa. The *Bertani* had apparently eventually finished up on the seabed in Tripoli, and there she lay until after the war, when she was salvaged and, presumably, returned to her owner. She'd been underwater for a couple of years at least, but the need for ships during that period was so severe that it was considered worth the salvage.

Anyway, when I boarded her in Mombasa, en route to the U.K., she was then on a regular run, Genoa, Mediterranean ports including Beirut, Suez, east coast of Africa, down to Durban, where she turned around. I was greatly interested in your narrative as I was in North Africa during 1941/43, although I didn't get to Tripoli. I was with the RAF.

I think, when I left her in Genoa, she was doing one or maybe two more trips and then was destined for the scrap yard. I had an interest in ships at the time, still have, and was an active member of the World Shipping Society. The old *Bertani* has a special place in my heart, too, as it was on board her that my daughter, now approaching her 16th birthday, was conceived!

As regards Paolo, I hope he made it and is, indeed, happily married in North Africa or Italy, maybe with a dozen bambinos. I got to know several Italian POWs during my time in North Africa, and all of them felt the same as your Paolo.

Stephen Ghent
Box 2070
Konedobu
Papua, New Guinea

REVERSE AUTOPATCH

As a member of the Tri-County Repeater Association of the Silver Spring, Maryland, area, I have been asked to investigate the past experiences of fellow amateur radio operators who have operated or used repeaters with reverse autopatch.

By reverse autopatch I mean an autopatch setup where a person, knowing the phone number of the repeater and a special access code, can (on the telephone) call a repeater and either get on the air directly or cause a tone or other sound to be transmitted by the repeater, which is then answered by either a control operator or anyone listening to the repeater, by transmitting an access code, which, in effect, answers the phone on the air.

We are interested in hearing from anyone who has had experiences operating a repeater with reverse autopatch or from persons who have used such machines. In particular, we would like to know answers to as many of the following questions as possible. Every little bit of information will be of help.

1. What techniques are used to enable telephone callers to gain access to the repeater?
2. What is transmitted by the repeater when access is achieved?
3. Who is permitted access by telephone?
4. How do you limit who can access the repeater by phone?
5. When a telephone caller is not able to speak over the air when he first calls (accesses the repeater), that is, when only a tone or other signal is transmitted when the caller accesses the repeater, how is the call answered?
6. Has anyone had oral or written communication with the FCC regarding reverse autopatch? What was the result of such communication?
7. Has anyone personal knowledge of an amateur repeater which has or had reverse autopatch where the FCC has asked or required that repeater to terminate operation of a reverse autopatch? Please provide details.

Any additional information or details concerning this subject known to readers of *73 Magazine* will also be appreciated.

Please address all replies concerning this matter to: Tri-County Repeater Association, PO Box 718, Seabrook MD 20801.

E. C. Wenzinger WA3ZFK
Beltsville MD

CRYING OVER TVI

I have just signed up to take your magazine for another year, mostly because of your editorials and letters.

It is too bad that the amateur journals cannot be for the radio amateur and not for the advertisers. However, I can understand that the magazine's existence depends on advertising!

We complain about CB rigs, yet shut our eyes to most of the manufactured ham gear that radiates. The ads show glowing harmonic attenuations but fail to say anything about the leakage out of the cabinet and power line cord or 12-volt lead.

During the past year I have purchased numerous sets, trying to find one that does not cause TVI, and have sold them at a loss. Many of the sets are paint-to-paint bonding, have no filter in the 12-volt lead, and the ac line picks up rf. In one set in particular, the fan motor is parallel to and within an inch of the tank coil, and the leads go right out of the cabinet. Instead of screen shielding, there are castings with large slots.

The amateur journals could do one thing. They do not have to publish the discrepancies in their glowing evaluations of the sets, but they could contact the manufacturer and point out the problems. Perhaps they might cooperate and try to fix the problem, and give credit where due to those who have done a good job of bonding the cabinets and filtering.

I, for one, am tired of being ripped off purchasing equipment after reading evaluation reports in the amateur journals. The only way you can know is to buy a set, try it, and compare it with sets that you know do not cause TVI. This should be a service of amateur organizations to which we pay dues to look out for our interests.

Ed Marriner W6XM
La Jolla CA

Ed, put your typewriter where your mouth is. I haven't had any problems with TVI from ham rigs and I've tested a lot of 'em. I've been able to operate a TV set right on top of my linear amplifier without problems, even in the far fringe area. If you've had trouble, you have not *taken the trouble to write any details down and send them to me . . . nor has any other ham in the country. If there really is a problem, which I doubt, I'd like to see some data on it . . . and some cures to the problem. Some grounding and shielding should be a lot simpler and less expensive than selling the set. – Wayne.*

MAKE IT MEDTRONIC

In the December issue of *73*, pages 17 and 32, are two letters from W9VFG on his problems with the General Electric pacemakers. He also mentioned that 15 other models by GE were also bad.

One Oct. 22, 1974, three years ago, I had a Medtronic pacemaker installed. As soon as I got home, I found that I could monitor the pacemaker with a Heathkit signal tracer, set on rf. A week later, I went to my surgeon and asked him about operating my ham rig. I also wrote to Medtronics. The surgeon, when he found I could monitor the pacer, told me to try operating while using the tracer. So I checked with the exciter, and found no effect on the pacer. I turned on the linear, and still no problem.

Anyhow, at the visit with the surgeon he showed me a model like I had. It was completely shielded, with a single coaxial lead about ten inches long. This went through a vein to the bottom of the heart, with a button on the end. This button was to be in contact with the bottom of the heart; the ground came from the shield and the case. After three years, my interval is .855. Divide this into 60 to get my pulse rate per minute.

My gear consists of a KWM2, a Heath SB-220 linear, a coax switch above them, three coax leads about 75 feet long, and a home brew three element quad, about 30 feet up. I operate three to ten hours a week, both SSB and CW. CW is barefoot. I have no effect on the pacemaker of any kind, operating either full power or barefoot.

I am due for a new one, when the

Continued on page 27.

Editor:
Robert Baker WB2GFE
15 Windsor Dr.
Atco NJ 08004

CONTESTS

CQ WORLDWIDE WPX SSB CONTEST

Starts: 0000 GMT Saturday, March 25
Ends: 2400 GMT Sunday, March 26

Only 30 hours of the 48-hour contest period permitted for single operator stations. The 18 hours off may be taken in up to 5 periods during the contest, but must be clearly indicated in the log. Multi-operator stations may operate the entire 48 hours. All bands, 1.8 to 28 MHz, may be used, but all QSOs must be 2xSSB only.

ENTRY CLASSES:
Single-operator, allband or single-band; multi-operator (allband only), single- or multi-transmitter; multi-operator, multi-transmitter only allowed one signal per band.

EXCHANGE:
RS and 3 digit progressive QSO number starting at 001; use 4 digit number over 1000; multi-transmitter stations use separate numbers for each band.

POINTS:
QSOs with stations on different continent – 3 points on 14 to 28 MHz, 6 points on 7 to 1.8 MHz. Contacts between North American countries (not your own) count 2 points on 14 to 28 MHz, 4 points on 1.8 to 7 MHz. Contacts between stations in the same continent but not in the same country count 1 point on 14 to 28 MHz, 2 points on 1.8 to 7 MHz. Contacts between stations in the same country count only for multipliers, not for QSO points.

MULTIPLIER:
The multiplier is the total number of different prefixes worked regardless of band. Each prefix may be counted only once.

SCORING:
Single-op, allband and multi-operated stations – total number of QSO points from all bands times the total multiplier. Single-op, single-band – total number of QSO points from that band times the multiplier. NOTE: A station may be worked once on each band for QSO points, but the prefix multiplier is only counted once.

AWARDS:
Certificates will be awarded in each category in each country, and each call area in US, Canada, and Australia. Other special awards and trophies will be awarded as listed in *CQ Magazine*. To be eligible for awards, single-operator stations must work a minimum of 12 hours; multi-operator stations must work a minimum of 24 hours.

LOGS:
Show all times in GMT; use a separate sheet for each band. Prefix multipliers should be entered only the first time they are contacted. Logs should be checked for duplicate QSOs and prefix multipliers. It is recommended that you use a prefix check sheet and include it with your entry. Each entry must be accompanied by a summary sheet listing all scoring information, category, and your name and mailing address in block letters. Also, a signed declaration that all contest rules and regulations for amateur radio in your country have been observed should be included. Official logs and summary sheets are available from *CQ Magazine*. Send a large self-addressed envelope with sufficient return postage or IRCs to: CQ WW WPX SSB Contest Committee, 14 Vandeventer Avenue, Port Washington, LI, NY 11050. All entries should be postmarked no later than May 1 and addressed to the address shown above. The deadlines will be made more flexible in rare isolated areas.

Please check the January issue of CQ Magazine *for complete rules and changes made at the last minute.*

BARTG SPRING RTTY CONTEST

Starts: 0200 GMT Saturday, March 25
Ends: 0200 GMT Monday, March 27

Only 30 hours of the total 48-hour contest period may be operated. The 18 hour rest period can be taken at any time, but off periods may not be less than 3 hours at a time. Times on and off the air must be summarized on the log and score sheets. There will be separate categories for multi-operator and SWLs. Use all amateur bands from 3.5 to 28 MHz. Stations may not be contacted more than once on any one band. In addition to the ARRL country list, each W/K, VE/VO, and VK call area will be counted as a separate country.

EXCHANGE:
Time in GMT, must be a full 4 figure group – use of "same" or "same as yours" will not be permitted. RST and message number. Message number must consist of a 3 figure group starting with 001 for the first contact.

POINTS:
All 2-way RTTY contacts with stations within one's own country will count 2 points. All 2-way RTTY contacts with stations outside one's own country will count 10 points. All stations will receive a bonus of 200 points per country worked including their own. NOTE: Any one country may be counted again if worked on another band, but continents are counted only once.

SCORING:
The total score is the sum of (the 2-way exchange points times the number of countries worked) plus (the number of countries worked times the country bonus points times the number of continents).

LOGS & SCORE SHEETS:
Use one log sheet for each band and indicate any rest periods. Logs must contain: date and time in GMT, callsign of station worked, RST report and message number sent, RST report and message number received, and exchange points claimed. The judges' decision will be final. Send contest logs to: Ted Double G8CDW, 89 Linden Gardens, Enfield, Middlesex, England EN1 4DX. Logs must be received by May 31st.

AWARDS:
Certificates will be awarded to the leading stations in each class and to the top stations in each continent and each W/K, VE/VO call area. The final positions in the Results Table will be valid for entry in the "World Champion of RTTY" Championship.

If any contestant contacts 25 or more different countries (W/K, VE/VO, and VK call areas do not count as separate countries for award) on 2-way RTTY during this contest, a claim may be made for the Quarter Century Award issued by the British Amateur Radio Teleprinter Group and for which a charge of $2.00 or 8 IRCs is made. Make your claim at the same time as you send in a contest log. Holders of existing QCA awards will automatically have any new additional countries added to their records.

Continued on page 60

CALENDAR

*Mar 4-5	ARRL DX Contest – Phone
Mar 4-5	YL-OM CW Contest
*Mar 18-19	ARRL DX Contest – CW
Mar 25-26	CQ WW WPX SSB Contest
Mar 25-27	BARTG Spring RTTY Contest
Apr 1-2	TENN QSO Party
Apr 1-3	QRP QSO Party
Apr 8-9	Open ARRL CD Party – CW
Apr 11-12	DX to W/VE YL CW Party
Apr 15-16	ARRL CD Party – Phone
Apr 22-23	Zero District QSO Party
Apr 25-26	DX to W/VE YL Phone Party
Apr 29-30	PACC Contest
June 3-4	IARS/CHC/FHC/HTH QSO Party
June 10-11	ARRL VHF QSO Party
June 24-25	ARRL Field Day
June 24-25	First REF Ten Day
July 4	ARRL Straight Key Night
July 8-9	IARU Radiosport Competition
Aug 19-20	NJ QSO Party
Sept 9-10	ARRL VHF QSO Party
Oct 14-15	ARRL CD Party – CW
Oct 21-22	ARRL CD Party – Phone
Nov 4-5	ARRL Sweepstakes – CW
Nov 18-19	ARRL Sweepstakes – Phone
Nov 18-19	Second REF Ten Day
Dec 2-3	ARRL 160 Meter Contest
Dec 9-10	ARRL 10 Meter Contest

* = described in last issue

RESULTS

RESULTS OF THE 1977 OHIO QSO PARTY

Ohio State Winners:

W8KIC (WB8MZZ operator)	82620 points	(trophy winner)
WB8JBM	79299	
WB8OFR	53475	
K8MR	34103	
WB8SVN	32488	

Out-of-State Winners:

W4VF	8410 points	(trophy winner)
WA4QIT	6880	
K3HXS	6733	
WA1UWR	5588	
WA1FCN	4181	

New Products

NEW ASTATIC 877L OMNIDIRECTIONAL DYNAMIC MICROPHONE

Astatic's new 877L public address and paging microphone is engineered for quality performance, styled for contemporary appearance, and priced for economy.

The omnidirectional dynamic desk microphone has a smooth peak-free wideband frequency with a slight rise above 2000 Hz for natural highly intelligible sound. Frequency response is 50 to 12,000 Hz; nominal impedance is 400 Ohms.

Built for years of trouble-free service, the 877L features a long-life DPDT leaf switch with easy push-bar control and locking capabilities. The rugged high-impact molded housing withstands abuse. The 877L also has environmental resistance.

Supplied with seven feet (2.1m) of four-conductor two-shielded cable wired normally-open for relay control, the attractively styled microphone is available in black, white, and beige.

For more information on the 877L public address and paging microphone, write *The Astatic Corporation, Commercial Sound Division, Conneaut OH 44030.*

THE MODEL C6500 GENERAL-COVERAGE COMMUNICATIONS RECEIVER

The model C6500 synthesized, general-coverage communications receiver is a new "Standard" in high-quality, low-cost performance that will please the most critical listener. Reception capability is provided for AM, CW, USB, and LSB. Unusual stability is achieved by utilizing a synthesized, drift-cancelling first mixer injection system giving 30 tunable ranges, covering the entire broadcast band from 500 kilohertz through 30 megahertz, from a single 10 MHz crystal oscillator, thus ensuring the frequency stability necessary for excellent SSB reception. Dial accuracy is better than 5 kHz readout, which is sufficient to locate and identify stations with known frequencies. There are two separate detectors, product and diode, to provide excellent performance for both SSB and AM signals. A mode switch provides wideband reception for AM and narrowband for SSB signals. The sideband filter is used to copy CW. A peaking preselector allows the user to manually achieve maximum sensitivity and interference rejection. Completely solid state in design, the Standard C6500 operates off both ac mains as well as eight internal type "D" flashlight battery cells. Automatic switchover to battery operation, internal or external source, is accomplished if the ac power should fail. For information, write *Standard Communications Corp., P.O. Box 92151, Los Angeles CA 90009.*

VERSATILE LOGIC MONITORS SEE INSIDE ICs

Continental Specialties Corporation offers a very nice way to peek inside the black box of digital DIPs: 16-channel clip-on logic monitors. An LED at each pin indicates the state of that pin by lighting or remaining dark.

One of the biggest problems in troubleshooting modern digital systems is that there is virtually no practical way to directly monitor the performance of both the inputs and outputs of individual gates, or of the packages of gates.

By monitoring an entire 14- or 16-pin DIP at once, CSC's logic monitors reveal the action of the package as a whole, permitting easy and often instant insight into its behavior or misbehavior.

The model LM-1 logic monitor tests DTL, TTL, HTL, and CMOS logic families. It automatically seeks out the highest positive and lowest negative voltage levels and draws its power from the IC under test. Individual comparators at each pin (100,000 Ohm input impedance) drive individually labeled LEDs "on" for a high, and "off" for a low logic level. It carries a suggested resale price of $74.95.

The model LM-2 logic monitor includes a fully isolated line-operated power supply to eliminate test circuit loading. Clip leads ride the supply rails of the circuit under test to derive the proper comparator levels. A switch selects RTL, DTL, TTL, HTL, or CMOS family operation. Suggested resale price is $129.95 for standard 117 V ac 50/60 Hz operation, 10% more for 220 V ac 50/60 Hz operation.

Application of these logic monitors has been compared to the use of a 16-channel oscilloscope. CSC logic monitors are elements of the digital troubleshooting family CSC calls The Logical Force™.

Information about CSC logic monitors and The Logical Force is available from CSC dealers and distributors, or from *Continental Specialties Corporation, 70 Fulton Terrace, New Haven, Connecticut 06509, (203)-624-3103, TWX (710)-465-1227.*

NEW SERIES OF MFJ ANTENNA TUNERS

MFJ Enterprises introduces a series of three brand new antenna tuners that uses efficient air-wound coils to give less losses than a tapped toroid for more Watts out.

The versatile, top-of-the-line MFJ-941 Versa Tuner II features built-in swr and dual-range wattmeter (300 and 30 Watts full scale), antenna switch for selecting two coax-fed antennas, random wire or balance line, tuner bypass, and a 1:4 balun for balance lines. It handles up to 300 Watts of rf output power and matches dipoles, inverted vees, random wires, verticals, mobile whips, beams, balance lines, and coax lines continuously from 1.8 through 30 MHz.

This beautiful little tuner is housed in a deluxe eggshell white Tea Tec enclosure with walnut grain sides and is a compact 8 x 2 x 6 inches.

SO-239 coax connectors are provided for transmitter input and all coax-fed antennas. Quality five-way binding posts are used for balance lines (2), random wire (1), and ground (1). Included are mobile mounting brackets.

The MFJ-941 Versa Tuner II sells for $79.95.

The MFJ-901 Versa Tuner also uses an efficient air-wound coil, handles up to 200 Watts, and has a built-in 1:4 balun for balance lines. It matches all types of transmission lines (coax, balance lines, random wire) and virtually all types of antennas continuously from 1.8 through 30 MHz. It is an ultra-compact 5 x 2 x 6 inches, uses SO-239 coax connectors, and quality five-way binding post for random wire and balance lines.

The MFJ-901 Versa Tuner sells for $59.95.

The MFJ-900 Econo Tuner is the same as the MFJ-901 Versa Tuner except that it does not have the built-in 1:4 balun for balance lines. Price is $49.95.

The MFJ-941 Versa Tuner II, MFJ-901 Versa Tuner, and the MFJ-900 Econo Tuner are all available from MFJ Enterprises, and have a 30-day money-back trial period. If you are not satisfied, you may return them within 30 days for a full refund (less shipping). MFJ also provides a one-year unconditional warranty.

To order, call toll-free (800)-647-8660, or mail the order to *MFJ Enterprises, P.O. Box 494, Mississippi State MS 39762.*

NEW CDE ROTOR FOR SUPER ANTENNAS

Cornell-Dubilier Electric Company has introduced a new heavy-duty rotor, the Tail Twister™, to handle antennas with up to 28 square feet of wind load area. A new control box was designed for the rotor to complete the system.

The rotor incorporates the highly successful Ham II design with a new thicker cast aluminum bell housing. Wider reinforced webs of the housing permit easy support of the largest antenna. On this model, the upper mast support is predrilled to have a bolt-through installation for positive locking. Also new is a three-ring ball bearing assembly to provide increased side thrust control and vertical load-carrying capacities.

The motor is a new design with an automatic coast-down prebrake action and a metal pinion gear to guard against stripping.

The control box features a full metered indication of the antenna direction with front panel control for calibration and brake. A separate on/off switch is provided for instant antenna location and brake operation. LEDs provide a positive signal for rotational power and brake operation. The unit is attractively housed in a black satin case. Low voltage control assures safe operation for the user and installer.

The Tail Twister™ system is designed for tower mounting as required for most "super" communications antennas. Weighing slightly over 18 pounds with a height of 14-1/16 inches and a diameter of 9-5/16 inches, the unit is secured with six 5/16-inch bolts provided. The mast diameter is a hefty 2 inches.

For further information, please contact Mr. W. Carlson, *Cornell-Dubilier Electric Co., 150 Avenue L, Newark NJ 07101; call (201)-589-7500.*

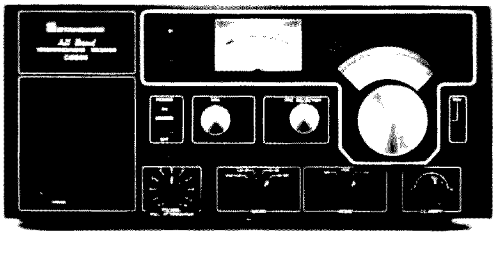

Standard's model C6500 general-coverage receiver.

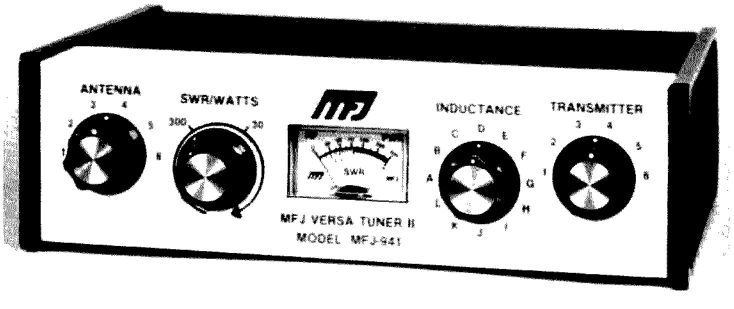

The MFJ-941 Versa Tuner II.

RTTY Loop

Marc I. Leavey, M.D. WA3AJR
4006 Winlee Road
Randallstown MD 21133

If you spent the winter in your shack and have done much RTTY operation, you may have discovered one stunning truth about this mode: It generates reams of material! A good deal of this information has some retention value, and preservation of certain items may be legally required, as in the case of third-party traffic. The next few columns will deal with information storage and retrieval for the RTTY station.

There are several factors you need to concern yourself with when you consider information storage systems. They include:

1. Ease of entering data into storage;
2. Ease of inspecting stored data;
3. Ease of editing stored data;
4. Ease of removing data from storage;
5. Viability of storage form;
6. Cost and availability of techniques;
7. Interchangeability between users.

The ideal storage medium would optimize all these factors. Such a medium, of course, does not exist, although many come close. You might find, however, that, by using complementary techniques, the gaps can be filled with a minimum effort. But wait, I am getting ahead of myself. First, let's look into just what each of these criteria involves.

You are faced with converting a stream of incoming Teletype® data, marks and spaces fleeting by in millisecond tempo, into a static record. This record must be flexible enough to accommodate one character or one hundred pages. Initiation of recording should be as uncomplicated as possible. There is little use for a system dependent upon the conjunction of the full moon and vernal equinox. The simplest, least prone to failure, system would be best.

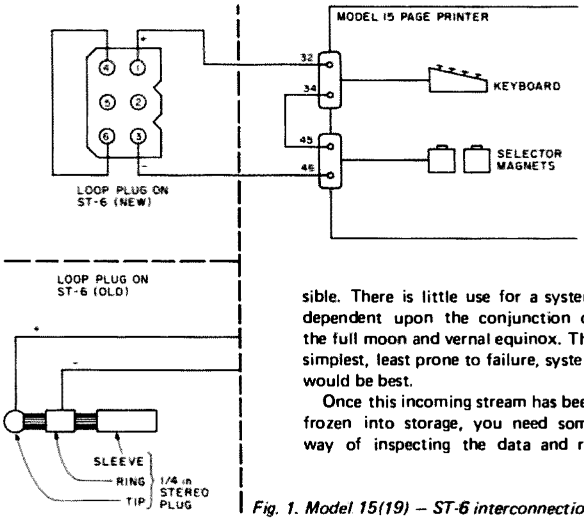

Fig. 1. Model 15(19) – ST-6 interconnection.

Once this incoming stream has been frozen into storage, you need some way of inspecting the data and revising or editing it. Such inspections should be nondestructive, i.e., the act of looking should leave the original record intact, and editing should be painless with revised data available for immediate use.

Transmission of this stored information should be accomplished with the same facility as recording it. As with the storage, the transmission link should operate at the maximum speed of the system.

Whatever the system, the records, once produced, should be as permanent as possible, with little chance of accidental loss of data. The system should be cheap, with all components readily available to the amateur from several sources. And it should be a system which would permit exchanges of data in the recorded form, as through the mail or at meetings.

Sounds like a lot to order, doesn't it? Well, it is, but there are systems around now which can neatly fill the bill. Next month, I will begin a detailed look at those techniques. Right now, let's turn to some readers' questions.

Johnny Carr, of Rockmart, Georgia, needs information on hooking up a model 19 and an ST-6 demodulator. Johnny, the model 19 set consists of the model 15 page printer and a paper tape reader called a transmitting distributor (TD). You need four power sources to get this machine up and running: 115 V ac for the motors; 60 mA loop for the selector magnets; and dc supplies for the tape punch and TD clutch. You indicate that you have the tape punch supply, and I will bet that the TD clutch is also taken care of. If you refer to the side diagram of the model 15 in the September, 1977, edition of this column, you will find that these same contacts can be found on your model 19. Instead of a separate loop supply, the ST-6 has a built-in supply which is available at the rear skirt. Newer versions of the ST-6 use a six-pin molex connector for the loop, while older models used a ¼-inch phone plug. Just hook the loop leads from the machine to the appropriate terminals on the ST-6, and you're off and running. Fig. 1 is a diagram to show you how.

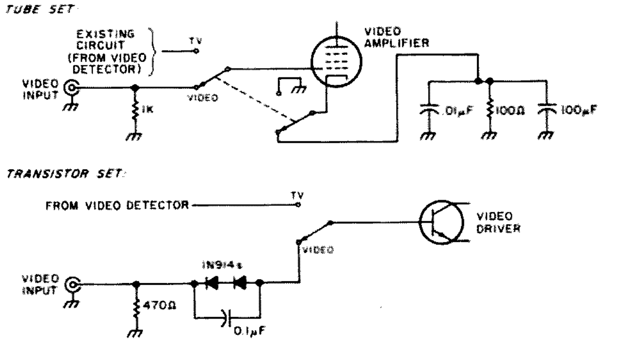

Fig. 2. Modifying a TV set for video input.

Velio Buccicone W9IIL passes along the information that he is attempting to receive RTTY using an Infotech M75 and a video monitor. He wants to know how to hook the two together. I can refer you to what is probably the best book around for information along that line, the *TVT Cookbook* by Don Lancaster. Fig. 2 shows two ways of coupling the video to the i-f stage of a standard TV, depending on whether the TV is tube or transistor. One major caution to anyone contemplating such a hookup, whether for RTTY or computers: Make sure the TV is transformer-powered and *isolated* from ground! Failure to do so can easily put 115 V ac on the ground bus of your system. Another way to do it, and the only way if you have an ac/dc TV that is not isolated, is to use any of the small rf modulators available. Less then ten dollars can buy one from any of several sources, several of which advertise in this magazine. Just feed the video in and the rf out to the antenna terminals. You lose some fine resolution, but, for RTTY, it is entirely adequate.

I look forward to receiving your questions, and try to answer as many as possible here in the pages of *73*. If you want a personal reply, a self-addressed stamped envelope is a must. This goes not only for me, but also for most authors whose writing you enjoy. Also welcomed are suggestions and questions to be used as springboards for future columns. Some topics now in development include having fun with RTTY and the use of computers in the shack.

Oscar Orbits

FINDING OSCAR

The listed data tells you the time and place OSCAR crosses the equator in an ascending orbit for the first time each day. To calculate successive orbits, make a list of the first orbit number and the next twelve orbits for that day. List the time of the first orbit. Each successive orbit is 115 minutes later (two hours less five minutes). The chart gives the longitude of the first crossing. Add 29° for each succeeding orbit. When OSCAR is ascending on the other side of the world, it will descend over you. To find the equatorial descending longitude, subtract 166 degrees from the ascending longitude. To find the time it passes the North Pole, add 29 minutes to the time it passes the equator. You should be able to hear OSCAR when it is within 45 degrees of you. The easiest way to do this is to take a globe and draw a circle with a radius of 2480 miles (4000 kilometers) from the home QTH. If it passes right overhead, you should be able to hear it for about 24 minutes total. OSCAR will pass an imaginary line drawn from San Francisco to Norfolk about 12 minutes after passing the equator. Add about a minute for each 200 miles that you live north of this line. If OSCAR passes 15 degrees from you, add another minute; at 30 degrees, three minutes; at 45 degrees, ten minutes. Mode A: 145.85-.95 MHz uplink, 29.4-29.5 MHz downlink, beacon at 29.502 MHz. Mode B: 432.125-.175 MHz uplink, 145.975-.925 MHz downlink, beacon at 145.972 MHz.

Oscar 7 Orbital Information

Orbit	Date (Mar)	Time (GMT)	Longitude of Eq. Crossing °W
15050 Abn	1	0023:01	62.1
15063 Bbn	2	0117:18	75.7
15076 Bbn	3	0016:38	60.5
15088 Abn	4	0110:56	74.1
15100 Bbn	5	0010:16	59.0
15113 Bbn	6	0104:33	72.6
15125 Abn	7	0003:54	57.4
15138 Bbn	8	0058:11	71.0
15151 Bbn	9	0152:28	84.6
15163 Abn	10	0051:49	69.4
15176 Bbn	11	0146:06	83.0
15188 Bbn	12	0045:27	67.9
15201 Abn	13	0139:44	81.4
15213 Bbn	14	0039:04	66.3
15226 Bbn	15	0133:22	79.9
15238 Abn	16	0032:42	64.7
15251 Bbn	17	0128:59	78.3
15263 Bbn	18	0026:20	63.2
15276 Abn	19	0120:37	76.7
15288 Bbn	20	0019:58	61.6
15301 Bbn	21	0114:15	75.2
15313 Abn	22	0013:35	60.0
15326 Bbn	23	0107:53	73.6
15338 Bbn	24	0007:13	58.5
15351 Abn	25	0101:30	72.1
15363 Bbn	26	0000:51	56.9
15376 Bbn	27	0055:08	70.5
15389 Abn	28	0149:25	84.1
15401 Bbn	29	0048:46	68.9
15414 Bbn	30	0143:03	82.5
15426 Abn	31	0042:24	67.4

FCC Math

John F. Leahy WB6CKN
P.O. Box 539
Gonzales CA 93926

By the completion of the last installment in this series, we had purchased just about all the math tools we need to survive FCC exams. In this and the following, we'll put these tools to work in order to gain the experience which alone will assure success on those exams.

Let's start by applying some algebra to that inductive reactance formula, $X_L = 2\pi fL$, we saw last time. Suppose we know the reactance of a particular coil is 700 Ohms at 3.725 MHz. Can we use our formula to determine the coil's inductance? We sure can!

We know that X_L is 700 Ohms, f is 3.725 MHz, and π is, as always, about 3. Putting these into our formula, we have: $700 = 2(3)(4 \times 10^6)L$, where the parentheses show we are multiplying. Note that we've rounded the frequency, 3.725 MHz, to 4×10^6 (mega, remember, means times a million, times 10^6). We're after inductance, L. How the dickens do we get L by itself on one side of the equation, with everything else on the other?

This brings us back to playing around with numbers. $120 = 2(3)4(5)$ — again, parentheses around the 3 and 5 are enough to indicate that what we have here is multiplication and not the number two thousand three hundred forty-five or something — is a true equation in the same form as $X_L = 2\pi fL$. The 5 is in the same place as L. Can we get 5 by itself and still have the same five numbers in a true equation? Because whatever technique works with this *number* equation (to isolate the 5 on one side with everything else on the other) will no doubt work with the *letter* equation, to isolate L by *itself*. After a bit of playing around, you may notice that $120/2 = 3(4)5$, and $120/[2(3)] = 4(5)$, and finally $120/[2(3)4] = 5$ (120 divided by 24 equals 5). Voilà! 5 by itself! We've done it! By moving everything that was with the 5 down to the bottom of the other side, we have a true equation and have isolated 5 by itself. That must mean that we can move the things with L in our reactance equation down to the bottom of the other side to get L by itself in a true equation. Doing just that gives us: $X_L/2\pi f = L$. And we can quickly use this transposed formula to solve our problem, $L = 700/[2(3)(4 \times 10^6)]$, which is $(7 \times 10^2)/(24 \times 10^6)$. 24×10^6 rounded is $2 \times 10^1 \times 10^6$ or 2×10^7, so we have $(7 \times 10^2)/(2 \times 10^7)$, or about $3 \times 10^{2-7}$ or 3×10^{-5}, 30 microhenrys. (Can you change that to millihenrys and nanohenrys? Answer below.*) Incidentally, the calculator gives 29.9 microhenrys. Look how close we come with these relaxed, rounded-out computations — plenty close for FCC exams! The answer tells us that it is a 30 μH inductor which will give us 700 Ohms resistance to a 3.725 MHz current.

Notice that we can just as easily take that final number equation, $120/[2(3)4] = 5$ and work backwards to get, for example, $120/[2(4)] = 3(5)$ and all kinds of other combinations, as long as we put what's on top of one side of the equal sign on the bottom of what's on the other side.

That's another important tool! Whenever there's just multiplication and/or division in an equation or formula (no additions or subtractions), we can (with complete freedom) move what's on the top of one side to the bottom of the other and vice versa. This little device allows one to change a great many formulas into alternate forms which are necessary in solving electronics problems, as we shall see in a few seconds.

And the logic of it is quite simple. What we're really doing is just multiplying and dividing both sides of an equation by the same thing. If we start off with numbers that are equal and then do the same thing to both numbers, doesn't it seem logical that we'll end up with numbers that are still equal? Let me illustrate. $120 = 2(3)4(5)$. Divide both sides of that equality by 4: $120/4 = [2(3)4(5)]/4$. What we didn't see earlier was that division on the right-hand side. 4 into 4 is 1, and 1 times something is just that something. So the 4s disappear on the right, and we get a 4 on the bottom of the left (which, of course, I can divide into the 120 if I want to). The same holds for letters. $X_L = 2\pi fL$. Divide both sides by 2 and π and f: $X_L/2\pi f = \cancel{2\pi f}L/\cancel{2\pi f}$. The $2\pi f$s on the right divide out and disappear, but there's nothing for them to disappear into on the left, so they stay (until they're changed into numbers in a real problem and can then be divided into the number on top). What's left after the division is a *changed* formula, but it's still a *correct* one because everything was done on the up-and-up, with flawless logic!

In the above, we *divided* both sides by the same thing. As I indicated, we can also multiply. Remember our capacitive reactance formula, $X_C = 1/(2\pi fC)$. Suppose we wanted to know the frequency at which a 12 pF capacitor had a reactance of 1 MΩ. Here we're after f, the frequency, so we want to get it by itself, *on top*, on one of the sides. We already have the rule that what's on top on one side can be put on the bottom of the other and vice versa. And we must remember that anything that's by itself on one side is *on top*. You can think of it as being on top of an invisible 1. Thus in this case we move X_C from the top of the left side down to the bottom of the right, and f, frequency, which is what we're after, up from the bottom of the right to the top of the left, giving us: $f = 1/(2\pi X_C C)$. Now we just plug in numbers: $f = 1/[2(3)(1\ M\Omega)(12\ pF)]$, which, with powers of 10, is $1/[2(3)(1 \times 10^6)(12 \times 10^{-12})]$. 12×10^{-12} is $1.2 \times 10^1 \times 10^{-12}$, which, rounded, becomes 1×10^{-11}. So the bottom of the fraction is $2(3)1(1) \times 10^{6+-11}$, which is 6×10^{-5}. Change the 1 on top to 10×10^{-1}, and the fraction becomes $(10 \times 10^{-1})/(6 \times 10^{-5})$. 6 into 10 you might guess to be about 1.7, which can be simply rounded to 2. And since we're dividing, we subtract exponents of 10. -1 - -5 is -1 + 5, or 4. Hence the answer is about 2×10^4, 20 kHz. The calculator gives 13 kHz. These rounded out calculations are somewhat off, but still in the right ball park. If you need more accuracy, you can have π be 3.1 and leave the 1.2 for capacitance (instead of rounding to 1). That'll give 7.4 into 10 instead of 6 into 10, and you'll be right on the money. Again, you determine how accurate your computations have to be by looking at how close to each other the multiple-choice answers are in the actual FCC exam.

We're now ready for an exercise with which we'll finish this installment. It's a long exercise introducing many of the formulas you need for FCC exams. Consequently, even though it may be a bit painful, I recommend you go through it quite carefully (and leisurely, if possible). Work and answers can again be checked at the end.

EXERCISES

In each of the exercises that follow, a formula will be given to you with a brief explanation of the letters used. Following that, you will be asked to solve for one of the letters (get it by itself on one side of the equation) and then use this transformed formula in an actual computation using values given.

(1) $P = I^2R$, where P is power in Watts, I is current in Amperes (the I^2 just means we have I x I, so the formula could be written: P = I x I x R), and R is resistance in Ohms.

(a) Solve for R.

(b) Find the resistance where the power is 250 Watts and the current is 300 mA.

(2) $P = E^2/R$, where again P is power in Watts, E is volts, and R is again Ohms.

(a) Again, solve for R.

(b) Find the resistance where E is 950 V and P is 125 W.

(3) $E_s = (n_s/n_p)E_p$. This is a transformer formula. E_s is primary volts, E_p is secondary volts, n_s is the number of turns on the secondary winding, n_p is the number on the primary winding.

(a) Solve for n_s.

(b) How many turns should the secondary have if the primary voltage is 120 V, the secondary is 12.6 V, and the primary has 100 turns?

(4) Q = X/R, where Q is the quality factor of a coil or capacitor in a *series* circuit, called, simply, the "Q" of the coil or circuit. X is the reactance in Ohms of the coil or capacitor, R is the resistance in Ohms in series with the coil and/or capacitor.

(a) Solve for X.

(b) If R is 27 Ohms and Q = 78, what is X?

(5) $2\pi fL = 1/(2\pi fC)$. This is the formula for resonance of a coil/capacitor combination. You've seen both sides of this formula before. The left side is the reactance of a coil (X_L) and the right side is the reactance of a capacitor (X_C). What this formula says, then, is that at resonance the two reactances are equal, $X_L = X_C$. You already know what each letter stands for.

(a) Solve for C.

(b) What is the capacitance of a resonant circuit where the frequency is 7130 kHz and the inductance is 8 5 μH?

(6) T = RC. Here T is the time constant (the time in seconds it takes for a capacitor to charge to 63% of the full emf with a resistor of R Ohms in series with it). C is the capacitance in farads.

(a) Again, solve for C.

(b) If R is 800 Ohms and T is 0.2 seconds, what is C?

(7) T = L/R is a like formula for a *coil* and resistor in series, only this time T is the time (in seconds again) it takes for *current* (not voltage) to reach 63% of its final value. L is inductance in Henrys.

(a) Solve for L.

(b) If T is 0.003 seconds and R is 35 Ohms, what is L?

(8) Bandwidth = f_o/Q. Here bandwidth is the "half-power" or "3-dB-down" bandwidth of a resonant circuit. The center frequency is f_o and Q is the Q of problem 4.

(a) Solve for Q.

(b) What is the Q of a circuit whose center frequency is 1 kHz and bandwidth is 80 Hz?

(9) $Q = E_{out}/E_{in}$. Another Q formula, frequently quite useful! E_{out} is the output voltage (of course) and E_{in} is the input voltage to a particular circuit.

(a) Solve for E_{in}.

(b) If Q = 60 and E_{out} is 18 mV, what is E_{in}?

(10) $Q = Z_t/X_L$. Yet another Q formula (gads!), this time for a parallel resonant circuit, and again quite useful. Z_t is the impedance (in Ohms) across the parallel circuit and X_L is the coil's reactance in Ohms.

(a) Solve for X_L.

(b) If the Q is 35 and Z_t is 50 kΩ, what is X_L?

(11) $\mu = \Delta e_b/\Delta e_c$. This is a tube amplifier formula. μ (the Greek letter mu, the

Continued on page 139

*$3 \times 10^{-5} = 30 \times 10^{-6}$ (30 microhenrys) $= 0.03 \times 10^{-3}$ (0.03 millihenrys) $= 30{,}000 \times 10^{-9}$ (30,000 nanohenrys). Good practice!

S. M. Allen K4JEM
308 Victoria Ave.
Fort Walton Beach FL 32548

The New, Improved "Best Keyer Yet"

—updating MINI-MOS

When I became the owner of a brand new TS-520D, I became somewhat ashamed of my Radio Shack straight key. I looked around at several different keyers and decided that the best I had seen, by far, was the MINI-MOS by WA6EGY.[1] I left fingerprints all over the article for quite a while, and then Santa Claus delivered a beautiful new HK-1 dual-lever squeeze paddle from Ham Radio Center.[2] I was now forced to quit fingering the pages and start building.

Now, being the type of person I am, I can't leave a perfectly good design alone, even one as beautiful as the MINI-MOS. After much searching, I was finally able to make two changes that, I think, add the icing to the cake. The two changes are independent of each other, so both, either, or neither can be incorporated.

Photos by Jim Gerritz WA4FMA

Final happy combination: MINI-MOS+, HK-1 squeeze paddle, and TS-520D.

Mod. 1 is quite simple. In the original keyer, the base of the paddle, if an external paddle is used, is not at ground but at -9 volts. If you are as violent on CW as I am, or if your shack is as messy as mine, there is a very real possibility that the paddle base could come in contact with ground, vastly reducing battery life. By replacing the cross-coupled NAND gates used for dot and dash storage with a dual type D flip-flop, used for set-reset, the paddle base is now at $+V_{dd}$, which is chassis ground. The only thing that is not obvious is the fact that, with both the set and reset inputs to the 4013 flip-flop high, both the Q and $\bar{Q}$ outputs go high. This feature is necessary to make the keyer work as originally designed.

Mod. 2 is a little more complex. One thing I had noticed when working CW is that, as the speed goes higher, character spacing seems to disappear. I hoped that my CW didn't exhibit this phenomenon, but I wanted to be sure. I wanted automatic character spacing. I also decided that I didn't need, or want, the built-in sidetone oscillator, since there was already one in the TS-520D. This freed up two 2-input NOR gates and one 2-input OR gate for other uses. By adding one quad 2-input NAND gate (4011), I could get my automatic character spacing.

Now for those of you who may have forgotten, the MINI-MOS does not just generate dots and dashes, but dot/space and dash/space pairs. When U3A is set, an element two dot lengths is sent, first a dot (1 dot length) and then a space (1 dot length). When U3B is set, an element four dot lengths long is sent, first a dash (3 dot lengths) and then a space (1 dot length). In order to get a character space (3 dot lengths), a space 2 dot lengths long had to be added to the end of the element being sent

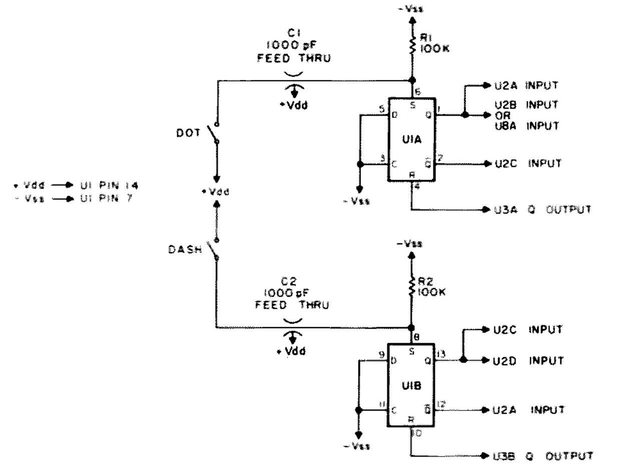

Fig. 1. Mod. 1 to place paddle base at chassis ground (+ V_{dd}). Second U1A Q output goes to U2B if Mod. 2 is not incorporated or to U8A if Mod. 2 is incorporated. U1: 4013.

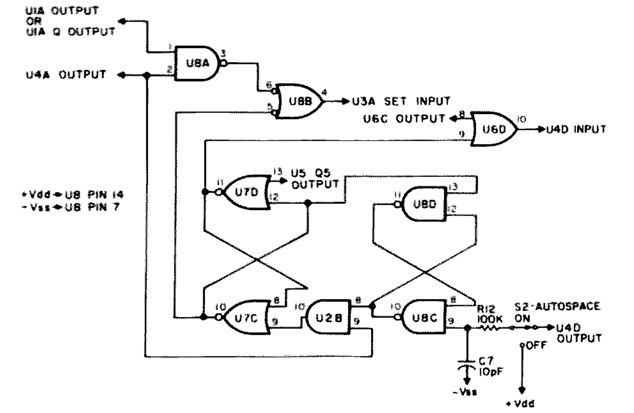

Fig. 2. Mod. 2 to add automatic character spacing (also removes sidetone oscillator). U8A and U8B replace U2B in the original circuit. Pin 1 of U8A comes from U1A Q output if Mod. 1 is incorporated. U6D is inserted between U6C output and U4D input. U8: 4011.

at the appropriate time. This is done by telling the keyer to send a dot element, but inhibiting the output.

Referring to Fig. 2, the operation is really quite simple. Whenever an element is sent by the MINI-MOS, the output of U4D goes low. This is fed to a set-reset flip-flop consisting of U8C and U8D. This flip-flop sets with the first element sent and remains set until it is reset by the initiation of the character space. This flip-flop says, "Something has been sent, and a character space needs to be sent." The output of this flip-flop is sent to AND gate U2B. The other input to U2B comes from the output of U4A, the clock control line. As long as a dot or dash element is being sent, this line is low, but, when all elements have been sent, it goes high. Therefore, the output of U2B says, "Something has been sent, and the sending is over. Start a character space." The output of U2B sets another set-reset flip-flop formed by U7C and U7D.

When this flip-flop is set, several things happen. First, the low output of U7C goes through U8B (which, along with U8A, has replaced U2B in the original circuit) and sets U3A, starting the dot element sequence. Second, the high output from U7D goes to U6D (which has been inserted between U6C and U4D in the original circuit), inhibiting the dot that would normally be sent at this time. Third, the low output from U7C is also sent to the U8C/U8D flip-flop, resetting it. Now, after one dot length, the Q5 output of U5 goes high, indicating that a dot was sent (except that we inhibited it at U6D) and that a space is now being sent. This signal is used to reset the U7C/U7D flip-flop. When U5Q5 goes back low, the sequence is complete, and normal operation may now proceed. The auto space can be disabled by removing the set input to the U8C/U8D flip-flop. This is done with S2.

If you wish to retain the sidetone oscillator, you'll have to add another IC, as shown in Fig. 3.

As you can see from the photographs, I built my MINI-MOS+ using wire-wrap. I was not particularly interested in making it very small. I used mine for a while just

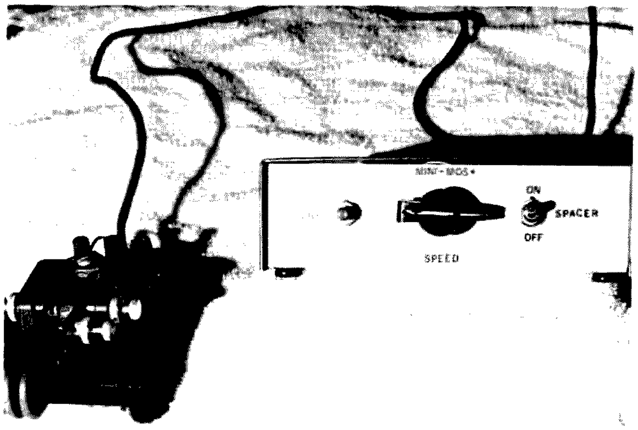

Front panel view. It's nice and uncluttered. Note the lack of power switch.

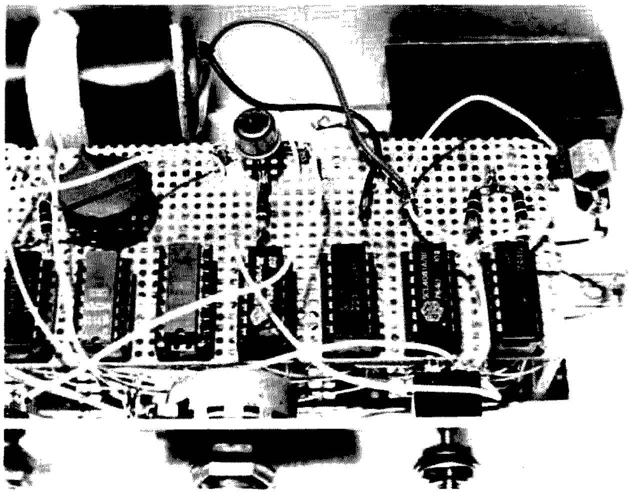

Inside view. MINI-MOS+ was built mostly with wire-wrap. IC sockets were glued to the perfboard and flea clips were used for discrete components. U1 is on the right, and U8 is out of the picture on the left. The little box in the right rear is an rf filter made of single-clad circuit board and 1000 pF feedthroughs on the dot, dash, and key lines. Battery is at the left rear, wrapped in foam.

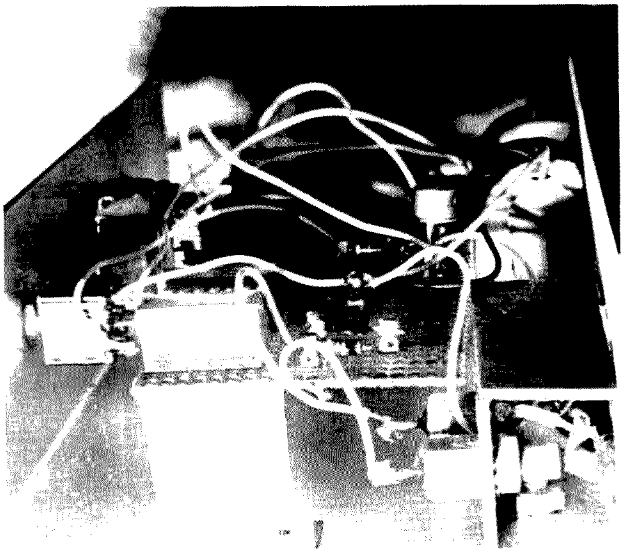

Close-up of perfboard mounting and rf filter. Perfboard was mounted using 3/4-inch squares of Plexiglas™ glued to the perfboard and chassis.

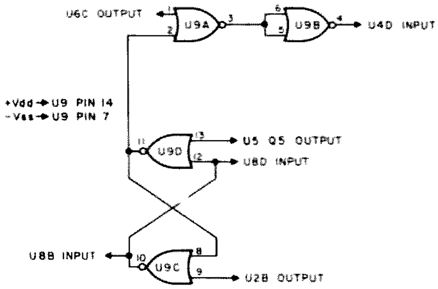

Fig. 3. Change to Mod. 2 if sidetone oscillator is to be retained. A second new IC (U9) must be added. U9: 4001.

loose on the desk and had no trouble with rf, except occasionally on 10 meters. Once in the metal box, no problems were encountered. For you guys with sharp eyes, the 16-pin IC is a 4020 that I used in place of the 4024 in the original circuit. I just happened to have a 4020, and there is no difference in the operation.

Operation is straightforward with no glitches. The only idiosyncrasy is that only a dash may be stored while the keyer is sending a character space. This is because the keyer thinks it is sending a dot while sending a character space. The automatic character spacing forces you to use the squeeze paddle properly. Not only does it do what it is designed to do, force proper spacing between characters, but, if you allow a little extra time between elements, it will throw in a character space. Sending MARMI instead of QRZ during a contest is embarrassing. However, if you persist with the automatic character spacing, you will notice a dramatic improvement in the quality of your CW.

With these two minor mods, the MINI-MOS+ will do anything any other keyer will and will do it cheaper and with much less power consumption. Build one — you'll like it. ■

References

[1] Erich A. Pfeiffer WA6EGY, "MINI-MOS — The Best Keyer Yet?", *73*, Aug., 1976, page 38.

[2] Ham Radio Center, Inc., 8342 Olive Blvd., St. Louis MO 63132.

The Powerful Grounded Antenna

—thrives on poor soil

H. Warren Lufkin W0SII
1219 Racine St.
Aurora CO 80011

The Beverage, or wave antenna,[1] has been around for a long time and, over the past several decades, has been employed by commercial, military, and, to a lesser extent, radio amateur users.[2] The Beverage is basically a specialized antenna system which is normally utilized at low frequencies or on the lower part of the high-frequency spectrum.

The Beverage belongs to the family of longwire antennas and can be considered a cousin of antennas such as the longwire, V-beam, rhombic, and fishbone. The characteristic that makes the Beverage different from its "cousins" is the way that it operates. These differences become apparent when one considers its unusual wave-generating properties, rather than its physical makeup.

At first glance, the Beverage seems to be nothing more than a longwire with a resistor at the far end. (See Fig. 1.) Examination of its electrical properties reveals that this longwire-type antenna can be excited or fed the same way as any other antenna with a similar feedpoint impedance. So what we have here is an antenna that looks similar to and can be driven like any other array of similar physical and electrical properties.

So far so good, but Mr. H. H. Beverage and a couple of his colleagues modified the antenna to operate in a manner quite different from the normal longwire. Let's have a further look at this antenna to see just how different it really is.

First, the antenna, positioned horizontally over the ground on Earth, transmits not a horizontal wave, but a vertical wave.[3] Secondly, this antenna does not rely on good earth conductivity for efficient operation, as do other antennas, but quite the opposite. In other words, the poorer the earth's conductivity, the better the Beverage works. For example, dry, sandy, or rocky earth under the antenna produces good results, and, conversely, moist or swampy ground or sea water produces poor results. The theory of operation of the Beverage antenna is that the wave traveling down the antenna wire moves faster (further) in a given time frame than the wave in the earth under the antenna,[4] causing the wave front to tilt forward toward the terminated end. This wave tilt produces a low vertical angle or radiation, which, of course, enhances its DX capability. When the antenna is used for both transmission and recep-

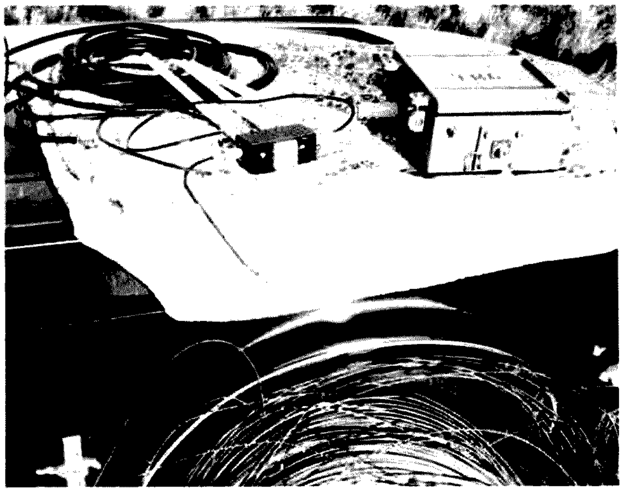

Some of the bits and pieces for the Beverage.

Installing the 1 kW broadband balun on the feed pole. The first two poles of my rhombic are used to support the beverage. The remaining poles are 20' long.

Fig. 1.

tion, the low vertical angle is, as might be expected, fully reciprocal.

Amateurs using the Beverage on the low-frequency bands, such as 160, 80, and even on 40 meters, have found the antenna's low vertical wave angle very beneficial in bringing in low-angle DX signals and, at the same time, attenuating the "local" or high-angle interference. (See Fig. 2.)

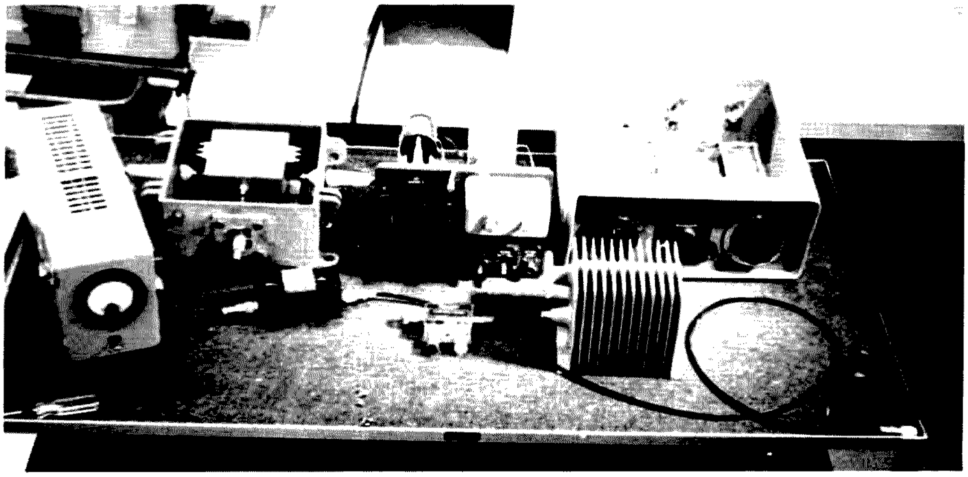

Left to right, front row — wattmeter, vswr meter, wattmeter coupler, and dummy load. Second row — balun, commercial single-wire tuner, and home-built transmatch.

The Beverage will give good performance with a length as short as one wavelength. As with the standard longwire, V-beam, or rhombic, the more wavelengths, the greater the gain, up to a point. That is to say that extremely long Beverage antennas exhibit a drop-off in gain. The best height for the antenna is from about 12 feet (3.7 meters) to 15 feet (4.6 meters) above ground. Below 12 feet, the gain falls off rapidly, and above 15 feet, there is little increase in gain.

The characteristic impedance of the single-wire antenna is approximately 500 Ohms. Two- or three-wire models can be employed, with a corresponding reduction in antenna impedance. Inasmuch as the antenna is terminated with a noninductive resistor of a value equal to the characteristic impedance, it is nonresonant and therefore is efficient over a very wide frequency range. The terminating resistor need dissipate only about one-third of the power fed to the antenna. The antenna can be fed in a number of ways, some of which are shown in Fig. 3.

How well does the Beverage perform? It does unusually well when operating on the lower frequencies. For example, a four-wavelength Beverage, operating on 80 meters, outperformed a Doublet 200 feet (60 meters) above ground, when I operated them in a recent DX contest. For the city-dwelling amateur,[5] the length of even a one-wavelength Beverage may prove a bit of a squeeze, but there may well be some ways to overcome this problem, such as the "loan" of some extra space by a friendly neighbor. Put up a Beverage if you can; it is a fine antenna. ■

References

1. H.H. Beverage, C.W. Rice, and E.W. Kellogg, "The Wave Antenna," *Trans. A.I.E.E.*, Vol. 42, pp. 215-266.
2. *The ARRL Handbook*, 13th Edition, Chapter 16, p. 294.
3. The wave front is actually elliptical because a small amount of the horizontal component is out of phase.
4. Not just the surface soil, but also the earth to a considerable depth under the antenna contributes to the conductivity.
5. My Colorado QTH is urban, but the Wyoming QTH is 5,000 acres, allowing almost anything in the way of antennas and towers.

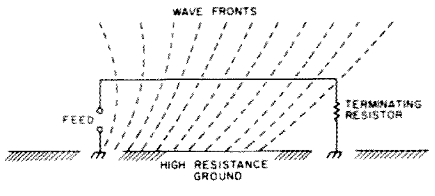

Fig. 2.

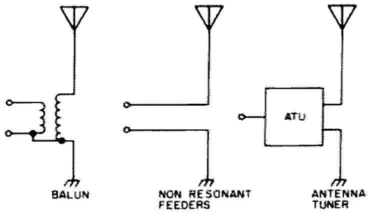

Fig. 3.

LETTERS

from page 12

batteries run down, and you may be sure it will be the same as the one I now have. No GE, even if free. I have written to *QST* on this, but have no knowledge that they ever passed it on. I am now using a Radio Shack 22-010 transistorized signal tracer. To use one, set it on rf, hold the clip on the lead about two inches below the left nipple, and hold the case firmly against the left ear, so as to get a good ground connection.

It is always a great pleasure to have a very good result from any product, and I want to say I am most happy with the Medtronic, and with their prompt answer to any question I have asked them.

Charles R. Green K4KBH
Englewood FL

SUPPORTING A SLEEPER

One of our members, Don Sleeper W1ONK, who has a future retirement home in Dennis, has appealed to the courts after losing his appeal to the Regional Historic Commission to keep his 68' Rohn 25G fold-over tower on that property.

Labeling it "visual pollution," the Old King's Highway Historic District Committee, on August 11, 1977, ordered the removal of the tower despite the fact that it fully complied with the Dennis zoning bylaw. When Sleeper asserted his constitutional rights to maintain his antenna in pursuit of his hobby, the Historic Commission ruled: "There is no such right where the structure involved is as grossly inappropriate as that under consideration."

Sleeper's appeal to the courts is a test of the authority of the local committee and the Regional Historic Commission. Losing the appeal could establish a detrimental precedent on the "appropriateness" of amateur towers in historic districts.

To date, the ARRL Legal Kit has been most helpful, and there is a

Continued on page 34

J. C. Chapel W9HDA
2349 Wiggins Avenue
Springfield IL 62704

How To Cut Costs On Power Supplies

—using Radio Shack components

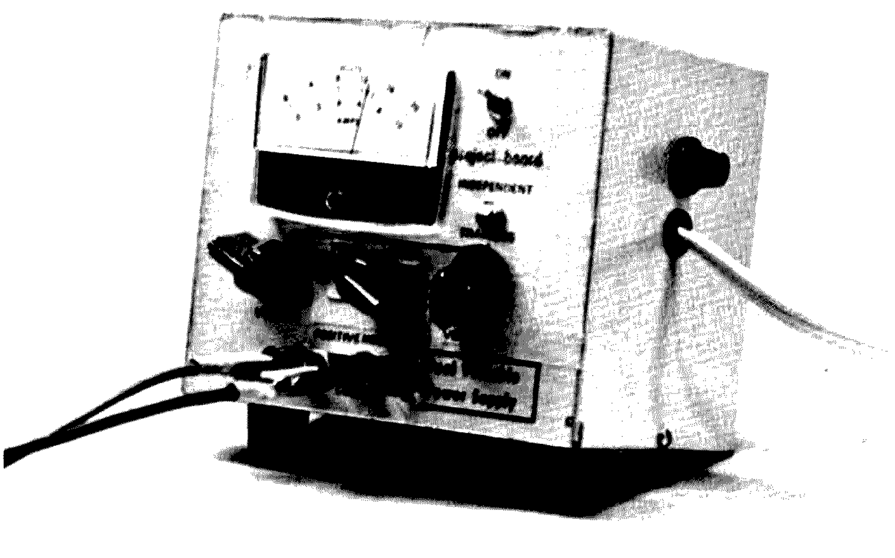

While at my local electronics department store (also known as Radio Shack), I discovered a new kind of kit that is available. The one in particular that appealed to me was the Dual Variable Power Supply, catalog number 277-112. The official listing in the catalog is 0-18 volts with plus or minus operation at 1 Amp. It also has variable current-limiting with dual or independent voltage tracking for the plus and minus supplies. Also, it stated, an optional 5-volt 1-Amp fixed output is available. The complete package, with all parts except hardware and case, sells for $77.17. However, the project board (PC board), front panel label, meter scales, and instructions can be purchased for $4.99. It is these latter items that were of interest to me.

Since I have been doing considerable experimenting with op amps and IC receivers, I decided to give the kit a try. The dual 12- to 15-volt range was badly needed.

The worst part of any home construction project is the etching of a circuit board. With the PC board already etched, drilled, and labeled, the worst part of the project is over.

Having a large junk box and not much ready cash like most hams, I proceeded to go through the parts list in the manual, locating all readily available parts that I might have. Most of the resistors except the low values, most capacitors except the large capacities, switches, pots, transformers, and hardware were located in the junk box. After a total expenditure of $23.47 plus sales tax, I had the remainder of the parts required.

1. Metering – see Fig. 1.
2. Current limiting – see Fig. 2.
3. Output transistors
   + supply – Q10 and R45 eliminated
   - supply – Q9 and R46 eliminated
   No wiring changes are required except to leave out parts.
4. Output terminals – see Fig. 3.
5. Output power transistors are mounted directly to heat sinks (collector). Sinks are attached to cabinet with nylon screws and nuts to provide electrical isolation.
6. Transformers T1 and T2 are wired the same but changed from 2 Amp to 1 Amp, 25.2 V ac output.

Table 1. Circuit changes.

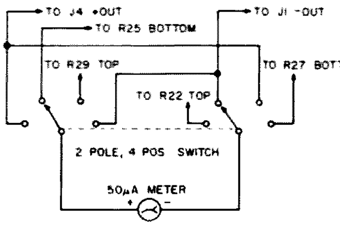

Fig. 1. Metering circuit changes. Arrangement: Pos. 1 – + voltage; Pos. 2 – - voltage; Pos. 3 – + current; Pos. 4 – - current.

Several items should be pointed out at this stage. If the existing parts are used, make sure that the part is good and really the value that you think it is. A switch I used from the junk box had badly burned contacts and caused no end of problems and burned-out transistors during the initial checkout. Parts can be substituted for the actual RS part number. Do make sure that the size of the substitute part is the same, or the holes will be wrong on the PC board. The transistors are readily substitutable, provided that the same type (NPN or PNP), power dissipation, and approximate gain are used. Mechanically, the transistors should also be the same, for reasons given above.

The assembly of the PC board is presented well in the manual, with each part listed and pictures of the board also included. There is plenty of room for the parts, and everything goes together nicely if the parts are the same or similar to those recommended. It took several hours to locate, check, and install all the parts on the board, but it is a professional-looking package when finished.

The meter used should be the same as listed, since the package contains a stick-on decal scale to convert from the existing microamps to volts and Amps. It is a little tricky getting the new scale under the meter needle, but the result is an immediately calibrated scale that really looks sharp.

A complete review of the circuit diagram revealed no place to add the so-called optional 5-volt supply. In fact, there is no provision on the board nor is anything mentioned in the manual in this regard. It appears that a design change was made along the way, and the correction was never made in the catalog description. Any 5-volt supply should probably be built separately anyway.

The major difference

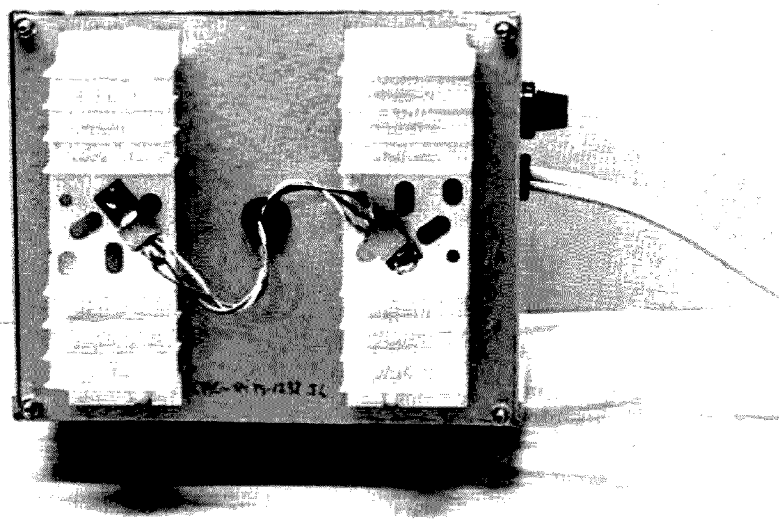

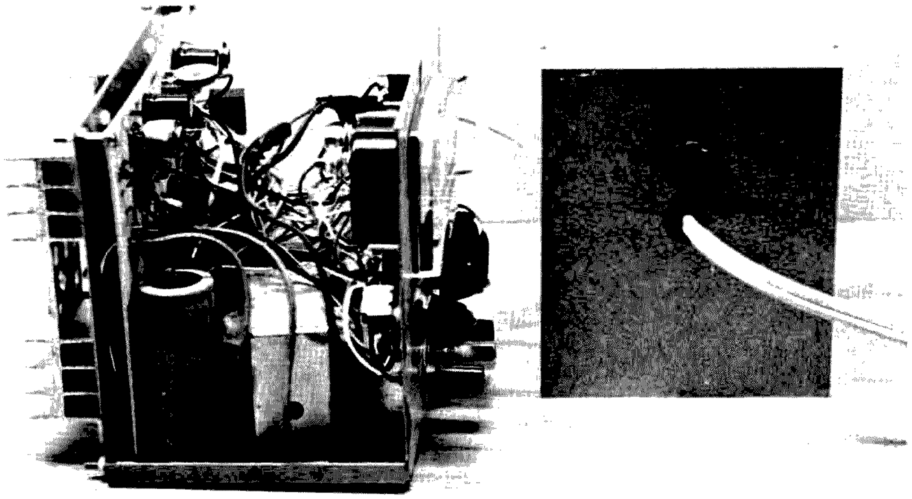

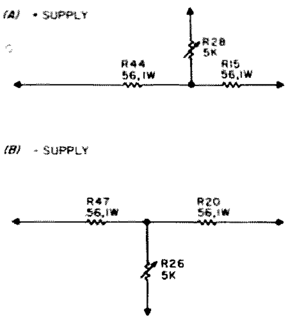

Fig. 2. Current limiting changes. Delete R51, R52, R53, R54, R55, R32, R33, R48, R49, and R50. (a) S6 is eliminated and replaced as shown. Values give current limiting at about 500 mA. (b) S5 is eliminated and replaced as shown, also 500 mA current limiting.

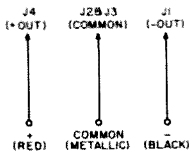

Fig. 3. Output terminal changes.

between this and other kits is that all of the mechanical parts except the board have to be done by the kit builder. The case and any of the other related parts have to be drilled, reamed, and lined up. Meter and switch holes do take some time and effort.

Being of the conservative and innovative type, several improvements occurred to me during the construction. Instead of two $8 meters, a single meter and a 99¢ 2-pole 4-position switch were used. This also eliminated the two volt-Amp switches. The two voltage and two current readings can be handled nicely by this switch change. The only drawback is the loss of simultaneous readings of voltage or current. Also, instead of several current-limit positions and related resistors and switches, a maximum current limit of about one-half Amp was substituted with a saving in size, current-limit resistors, and transformer rating. Instead of 2-Amp transformers, a 1-Amp was used in each supply. By reducing the available output current, the need for the second output transistor in parallel in each supply is eliminated. The binding posts were changed to red for positive output, metallic for ground, common for each supply, and, lastly, black for minus.

A 4" x 5" x 6" case was used to house the entire power supply instead of the high-price case listed. The final unit contains one meter, a voltage-current selector switch, and only one power transistor for each output. The front decal provided was modified with some cutting, trimming, and pasting over, but it definitely improved the appearance of the box.

After the early problems of the bad switch and blown transistors, the unit performed well. In fact, it has been used for four months without any problems. The checkout of the unit is easy, if good or new parts are used. The calibration is also easy, if any kind of a standard VOM or similar meter is available. The voltages are easily set, as are the current readings. Ripple voltage is almost unmeasurable, and the regulation is excellent.

That is about the whole story of the new kit. What is intriguing about this concept is that all of the parts or none of the parts can be provided from the junk box, and yet the result is the same. Also, changes can be made by the kit builder to better suit his requirements or pocketbook. The end result is a fine-performing power supply, with the actual cash outlay dependent upon the quality and quantity of available parts. The power supply design is excellent. The remaining question is: How well stocked is your junk box? Or, how well stocked is your pocketbook? The choice with this kit is yours! ■

Ralph R. Sergo
Americana Apts. #208
1701 Terrace
Killeen TX 76541

The Quicker, Slicker Transistor Checker

—diodes, too

The operating controls on oscilloscopes have become so complex that many technicians are reluctant to use them. It takes a great deal of encouragement to get them to approach the "beasts." Here is a very simple device that needs none of the synchronizing or delay features of an oscilloscope.

When used with a more complex oscilloscope, the device is connected to the vertical and horizontal inputs, and the amplitude or gain controls are set for approximately .25 to .5 volts per cm. The testing device has no controls and can be mounted in a small shielded box. The test leads are standard red and black, with the black lead grounded to the box. The box ground is common with the chassis of the scope.

Looking at Fig. 1., it is evident that, if the test leads are shorted, the vertical input of the scope is grounded, and the one-volt (rms) ac source appears across the 1000-Ohm resistor and is applied to the horizontal input. The result on the CRT screen is a horizontal line. If the test leads are not shorted (open), the vertical input sees the one volt, but the horizontal sees practically zero volts (because the only current through the 1000-Ohm resistor is leakage through the approximately one-megohm input to the vertical amplifier). Hence the result on the CRT screen is a vertical line.

Now, if a good diode is connected to the test leads, the picture on the CRT will be a combination of both open and short conditions, since the diode will conduct one way but not the other with respect to the ac test voltage source. This combination results in an L-shaped pattern. Its orientation depends on the polarity of the diode.

Reverse leakage or forward resistance in the diode will cause the lines to tilt from their normal vertical or horizontal orientation. The degree of this tilt, estimated against the CRT reference graticule, will give an idea of the severity of the leakage seen. Known values of resistance, placed across the test leads, can be used to calibrate the angles for reference purposes.

Diodes in a circuit can also be tested. The device in which the diode is mounted must be disconnected from all power and must be grounded. This is important, because the common ground is the chassis of the test device and the chassis of the oscilloscope. You must be free to place red and black test leads from the tester anywhere within the circuit being tested without interference from another ground.

When testing diodes already in another circuit, the horizontal line, if tilted, will accurately measure any forward resistance in the diode under test. Reverse leakage indications, however, are equivocal, due to unknown parallel resistances which may be in the circuit. If parallel capacity exists across the diode, the straight lines will become curved or will "open up" to show the more familiar Lissajous patterns obtained with out-of-phase conditions.

Transistors, of course, can also be tested, one diode section at a time. The results will immediately indicate leaky, open, or shorted transistors. When testing out-of-circuit transistors from emitter to collector, the usual reading on this device would be open.

Most technicians are familiar with the usual diode tests which use an ohmmeter. Once having used this device with a handy simple or not-so-simple oscilloscope, however, the technician is not likely to go back to the ohmmeter method. This is so much quicker, and the picture on the CRT is fascinating.

After a bit of practice with this device, the technician can quickly spot the polarity of diodes and can tell whether an unknown transistor is PNP or NPN and which lead is the base.

In summary, this device can be constructed for less than $10. It tests diodes and transistors quickly and safely, and immediately indicates shorts, opens, leakage, forward resistance, and polarity. And, most importantly, it is a painless inducement to get more people to use their oscilloscopes. ■

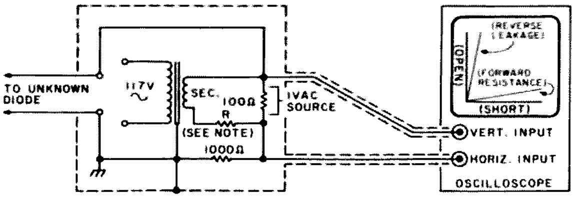

Fig. 1. Simple diode or transistor tester. Use any small filament transformer for ac test voltage source. Secondary must be isolated from ground. Value of R in Ohms equals [(sec. volts x 100) - 100].

Ralph E. Burns K2RB
43 North Ave.
Bloomfield NJ 07003

You, Too, Can Go Digital

—simple digital display for the HW-2036

Here is an easy-to-build digital readout for your Heath HW-2036. It features .8" displayed digits, timed display, and mode indication while transmitting.

The circuit uses five IC chips — four BCD-to-seven-segment decoder/drivers (7447) and one 74121 one-shot multivibrator — and the four seven-segment LED digits.

The 7447s, the 74121, and the common anode digits were obtained from James Electronics. I also found there a plastic instrument/clock case with red filter, which makes an ideal housing for the unit.

The circuit is shown in Fig. 1. The BCD data from the three thumbwheel switches is fed to three of the digit drivers. The 0/5 kHz toggle switch supplies logic information to the fourth driver.

Because the digits are only required at night and when changing frequency, they are normally blanked by the Q output of the 74121 one-shot. Depressing the push-button momentarily turns on the one-shot. Its period is 12 seconds, and the high on the Q output unblanks the display. The use of the digit blanking also reduces the power requirement from the HW-2036's +11-volt supply. The added 220 mA is only required during the unblanking period. The +5-volt supply has an added continuous drain of about 230 mA. However, as the normal load on this supply in the HW-2036 is about 220 mA, and the U7805 regulator is rated for 1 Amp, the total required 450 mA of +5-volt power is not a major concern.

In order to show the

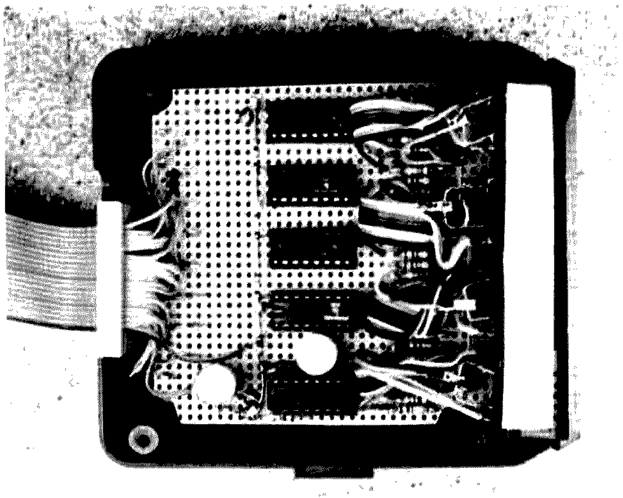

View of top side of perfboard. The four 7447 decoder/drivers are mounted in line behind the 1k Ohm, ¼-Watt LED segment current-limiting resistors. The 74121 one-shot is separated from the 7447s by the 220 uF timing capacitor. The 100 uF filter in the +5-volt supply lead is in the lower left-hand corner. The +5-volt bus runs directly behind the IC chips. A ribbon cable socket (with the pins removed) is clamped around the ribbon cable as a strain relief. The LED display units are held in line by a piece of masking tape.

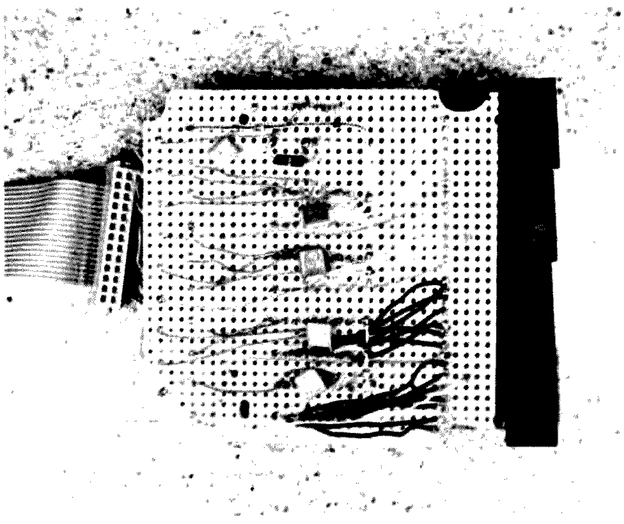

View of wiring side of perfboard, showing the ground bus running around the IC socket pins. All caps are .1 bypass, connected between the +5-volt IC supply and the ground bus. The resistor in the upper center is the 50k Ohm timing resistor in the 74121 one-shot circuit.

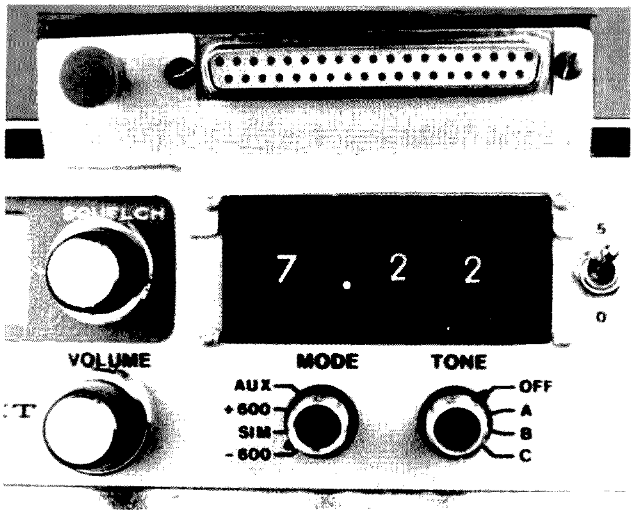

Mounting bracket attached to the HW-2036. The push-button and connector are in line. The parts projecting behind the aluminum bracket are covered with a housing glued to the top of the HW-2036 slide-on cover. The housing is made from copperclad circuit board and is sprayed with matching green paint.

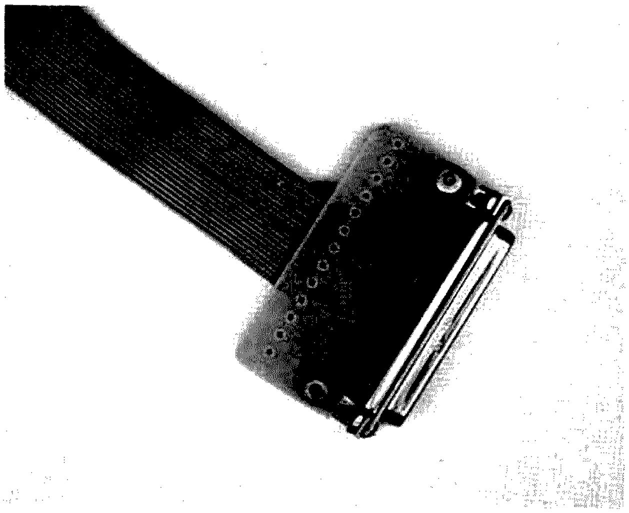

Close-up of the plug mounted on the end of the ribbon cable from the display unit. The clamp is constructed from a couple of pieces of epoxy circuit board bolted together through small brackets bolted to the plug.

transmitting mode, the available decimal points on the LED digits are used. By inverting the 0/5 kHz digit, the decimal point is now in the upper left-hand corner of the LED display. This is used as the +600 kHz indication. The decimal point of the next digit is wired as the -600 kHz indication, and the simplex indicator is the next decimal point. To turn on the mode indicator LED, the cathode of the DP is wired through a 1k Ohm resistor to the proper position of the mode selector switch. When the PTT button is operated, the selected crystal is enabled by means of a transistor switch. The ground thus supplied also lights the LED DP.

Construction

The construction of the display unit is straightforward and uncomplicated. As the photographs show, the IC chips are in line behind the row of 1k Ohm segment current-limiting resistors.

Buses for the +5, +11, and ground power leads are made using 22 gauge bare wire. All chips are inserted in sockets

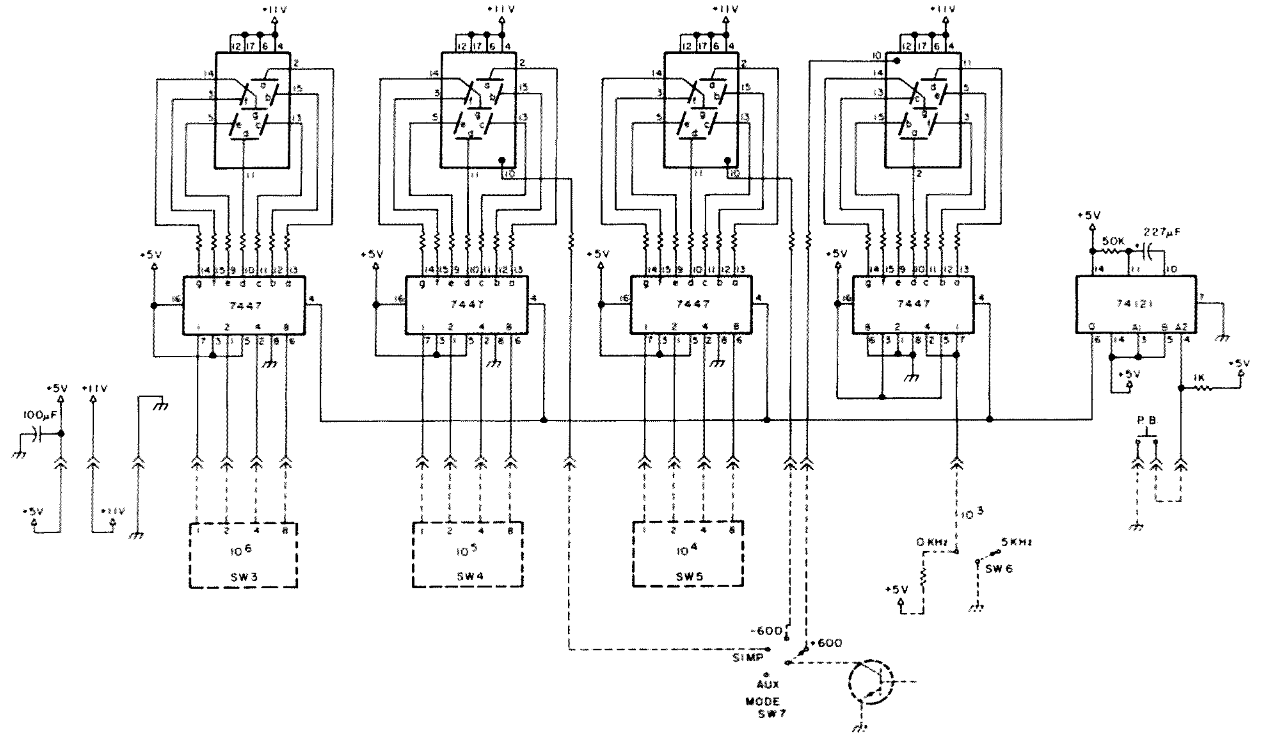

Fig. 1. Note: All segment resistors = 1k Ω ¼ W. Dotted lines indicate HW-2036 components.

View of completed unit connected to transceiver. For this photo, the display was turned on and the PTT button operated to show mode indication LED. The dot at the upper left corner of the 5 indicates +600 kHz mode. The unit is resting on top of the transceiver for the photo. In the car, the unit attaches to the dashboard by means of Velcro strips glued to the dash and the top of the display unit.

View of completed unit connected to transceiver. The dot in the lower center of the display between 5 and 1 indicates simplex mode.

mounted on .1" perfboard. The +5-volt supply requires a 100 uF electrolytic bypass where it enters the housing. Without this capacitor, the synthesizer goes out of lock. All chips are bypassed with a .1 uF capacitor.

The hardest job is the hardware. In order to avoid drilling in the front panel, I constructed an aluminum bracket with two ears spaced apart the width of the thumbwheel switch assembly. Inserting the top two mounting screws through holes in the ears holds the bracket to the front panel. It extends above the panel far enough to allow mounting a surplus multi-contact plug and the trigger push-button.

A slot cut in the front edge of the slide-on aluminum cover of the HW-2036 allows the flat ribbon cable from the plug into the interior of the transceiver. In order to connect the wires to the mode switch, it is necessary to completely remove the thumbwheel switch assembly. This requires removing the front panel.

The +5-volt supply is picked up from the output terminal of the 5 V regulator. The +11-volt power lead is soldered directly to the emitter terminal of the +11-volt regulator transistor.

As the 0/5 kHz digit is operated from the toggle switch, it is necessary to wire ground to the 2 and 8 inputs of the 7447 decoder/driver (pins 1 and 6).

The 1 and 4 inputs (pins 2 and 7) are paralleled, and they connect to the 0 kHz terminal of the toggle switch. Throwing the switch from the 0 to the 5 kHz position removes the ground on these two inputs, changing the digit from 0 to 5. (Attention must be paid to the segment pins on this digit, as it is inverted.)

The mating jack for the transceiver plug has a 20-conductor ribbon cable running to the display unit. A homemade clamp keeps any strain from the cable connections at the jack end, and the plastic housing is flexible enough to clamp down on the ribbon to keep that end in place. A plug and jack specifically designed for ribbon cable would have made a much neater installation, but they are expensive and hard to come by in single quantities.

A strip of Velcro™ glued to the top of the housing, with its hook mating surface glued beneath the dashboard, is all that's required for mounting the unit in the car. If desired, the transceiver can be hidden away under the front seat with just the thumbwheel and mode switches accessible.

Total cost for the unit was under $20. The convenience of changing frequency at night is well worth the effort expended in constructing this unit. ■

LETTERS

from page 27

possibility of some financial assistance from the ARRL should the case reach the Superior Court.

All this makes interesting reading, but the fact remains that, even if Don successfully defends his case, he will have sustained legal costs in his own defense which will run into several thousand dollars. Pretrial costs alone have already cost him nearly $3000. He can use financial help now!

The Radio Operators' Association of New Bedford (ROANB) is accepting contributions for the "ROANB-W1ONK Defense Fund." (Our 14-member club has already started the fund rolling with a $100 donation.) Any donations would be greatly appreciated. They can be made payable and sent to: ROANB-W1ONK Defense Fund, c/o Leland R. Crowell K1AIK, Bay Road, North Falmouth MA 02556.

Leland R. Crowell K1AIK
Radio Operators' Association of New Bedford
North Falmouth MA

COMMON SENSE?

Scanning the January, 1978, issue of *73*, I stumbled across F. J. Soxman's article, "Ham Shack Anthropometrics." I welcomed the article because it confirms my hypothesis that human engineers are specialists in using scientific principles and mathematical analysis to optimize the inefficiency and uselessness of a system.

In Fig. 5 of his article, Mr. Soxman sketches for us an anthropometrically-optimized ham station layout. The first thing that caught my eye is the teletypewriter (TTY) situated on the shelf above the linear amplifier. This is real handy:

1. You can stand up and lean over the desk to type at the keyboard.
2. Perhaps with the aid of a chair or stepladder you can read the copy as it is being printed.

Continued on page 50

Old Receivers— A Hidden Gold Mine

—updating those '40s receivers

Hank Olson W6GXN
P.O. Box 339
Menlo Park CA 94025

After I wrote an article on the resurrection of the Hallicrafters S38 (*73 Magazine*, Nov., 1976, p. 88), I was simply astounded by the volume of reader mail and general interest that was stimulated. It was apparent that nearly every ham who had been practicing the art in the period when S38s were available had owned one at one time or another. The same is probably true for several other less expensive receivers of the day, like the National NC57 and the Hallicrafters S40A. These two receivers represent a step up from the S38, in that they are transformer operated (not ac/dc) and also have rf amplifier stages. Referring to a 1949 copy of the *ARRL Handbook*, both the NC57 and the S40A are found in the advertising section, at the respective prices of $89.50 and $99.50.

The two receivers that I had to work with were obtained at ham auctions for nearly nothing. A nonworking receiver is only worth a few dollars at most ham auctions, since few hams seem to have the guts to dig into them and put them back into working order. My own motivation for buying and fixing old receivers is obscure, even to myself; it probably is my inherent sadness at seeing something once highly prized in such bad shape. (I also have three old Austin Healey sports cars that are slowly approaching original condition.) Also, there's the other consideration: What else am I going to do with that pile of tube-type components that I've been squirreling away for two or three decades?

The S40A was the first receiver that I had to work with, and its rebuilding reflects an earlier stage of semiconductor availability. This is not necessarily useless (to show one rebuilding job with a relatively obsolete circuit), since different areas of the country and the world have different parts availability. The S40A rebuilding job was started about 10 years ago and finished only recently. The NC57 was attacked only about two months ago. For reference, Fig. 1 shows the block diagrams of the two receivers. Note how very similar the two of them are. Both sets have nine tubes. (The total number of tubes in a receiver was an early figure for judging the "power" of a receiver, and such notions had some market value, even in the forties.) However, except for the slight stability advantage the OD3 voltage regulator

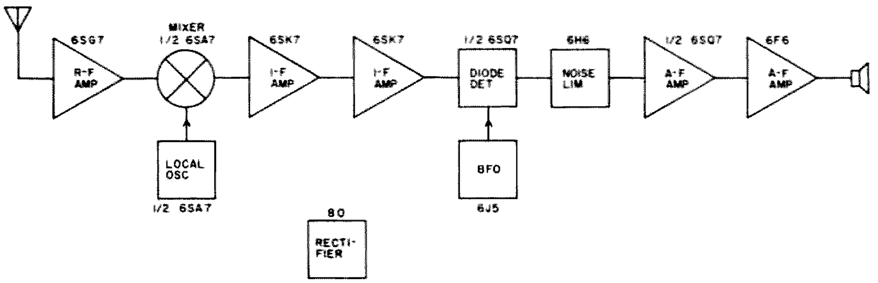

Fig. 1(a). Hallicrafters S40A.

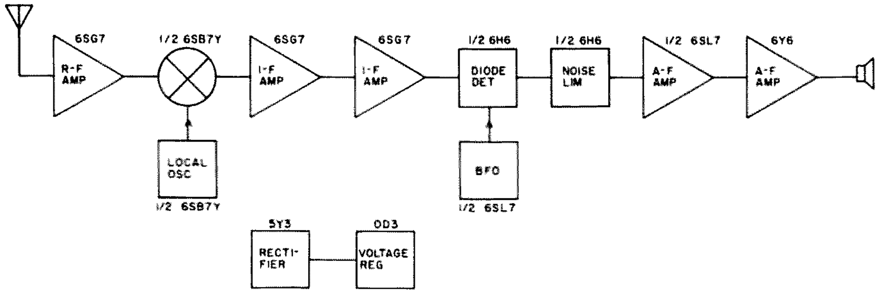

Fig. 1(b). National NC57.

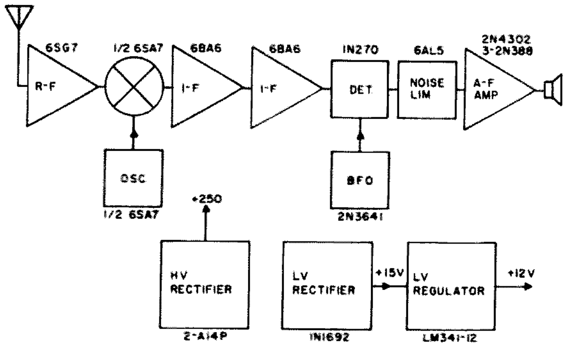

Fig. 2(a). Hallicrafters S40A, as modified.

gives the NC57, the two receivers are like peas in a pod.

The two receivers were in rather bad shape when I obtained them. The S40A had been essentially gutted, except for the front end coils and the front panel mounted components. The modification which had been started on it apparently called for sawing out the section of the original chassis that contained the i-f and af parts of the circuit. The NC57 had been worked over considerably, too, with plenty of haywire-style rewiring, all of it apparently done with a tinsmith's copper. An S-meter had been installed in the middle of the speaker grill, the hole apparently having been cut with a can opener. In both the receivers, unfortunately, no sign of the original power transformers could be found.

The aim in the rebuilding job was to get the receiver working again, in more or less the same shape as it had originally been advertised. Once one starts down the road of improvement, the options are endless, and finally one finds out that he should have started from scratch. So, the rf, i-f, and detector blocks of the receivers were left intact, with tubes and the avc loop undisturbed. The only thing done in this area was to replace all the old paper capacitors (mostly bypass capacitors) with newer ceramic disc or mylar types.

Since these newer capacitors are quite small, compared to their dripping wax and paper predecessors, this step really opens up a lot of room under the chassis. The decision to leave the rf, i-f, and detector block intact means that you're going to end up with at least a five-tube receiver. It also means that you're going to need the original high-voltage power supply or something equivalent to power the tube section. So save your HV supply transformer and choke, as they will be needed. The HV rectifier tube and filter capacitors will be replaced anyway, so it's not necessary to save them.

In my own particular case, since I had no HV power supply components, I had to make new supplies. The receivers' rf and i-f sections draw only about 60 mA, so modest sizes of power transformer and choke are required. The particular Triad R10A power transformers used were 525-volt secondary types (with center taps), so choke input filtering was used to obtain approximately the correct output voltages. The 90 mA rating of the R10A is larger than required (so is that of the Triad C5X choke), but I had to use whatever I had on hand. By using silicon rectifiers in lieu of rectifier tubes, considerable heat is taken out of the inside of the receivers, and the 5-volt rectifier filament windings of

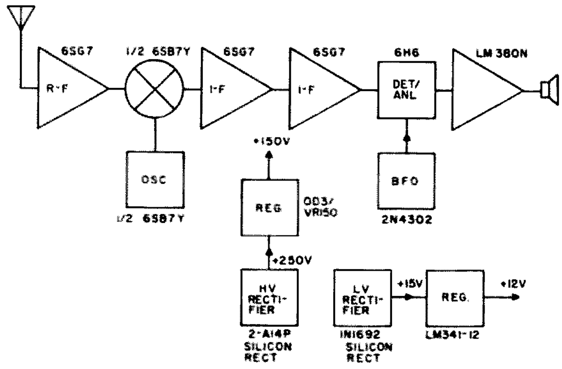

Fig. 2(b). National NC57, as rebuilt.

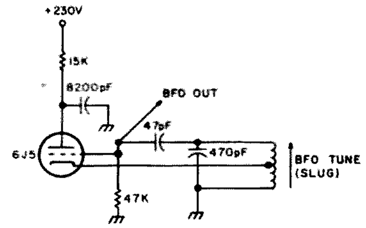

Fig. 3(a). Original bfo in S40A.

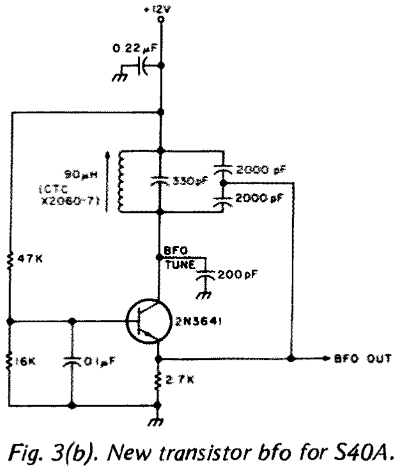

Fig. 3(b). New transistor bfo for S40A.

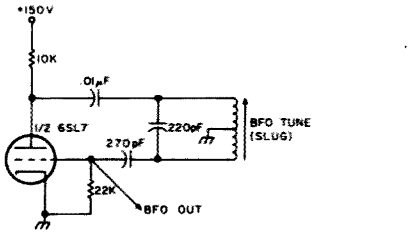

Fig. 4(a). Original bfo in NC57.

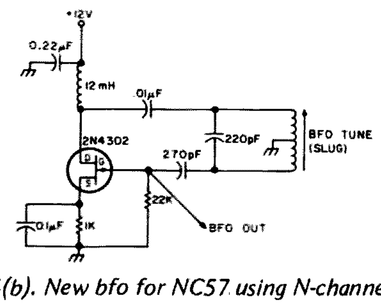

Fig. 4(b). New bfo for NC57 using N-channel FET.

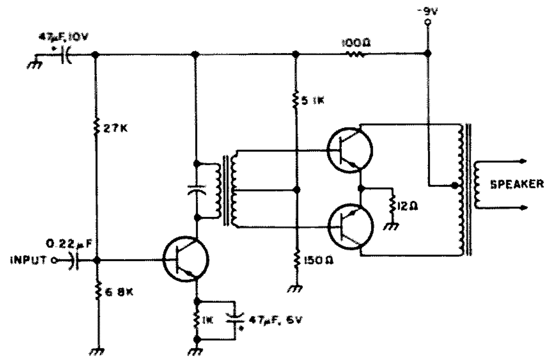

Fig. 5(a). Original audio amp from AM receiver. All transistors are original PNP germanium types.

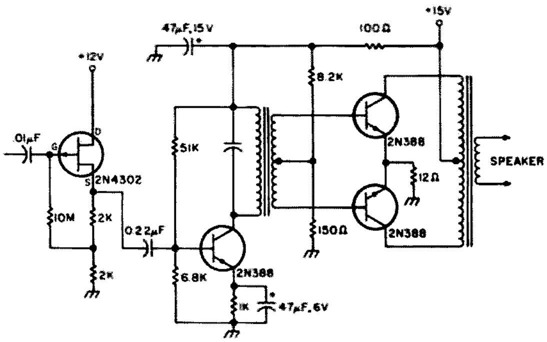

Fig. 5(b). Audio amp as rebuilt with added FET source follower.

the power transformers are made available to be put in series with the 6.3-volt heater windings for low-voltage dc supplies. Simple half-wave rectifiers produce +15 volts for the new solid state circuitry to be added and can be regulated down to provide +12 V or lower voltages, as required.

The S40A rebuilding was a bit more extensive than the NC57 job, simply because the entire i-f chassis area had been sawed out of the receiver. Since I had no i-f transformers or sockets, I had to build this area up from scratch. It turned out to be easier to use miniature tubes and i-f cans for the job (new holes had to be cut in the replacement chassis plate, anyway). I must stress, however, that this step improves the receiver in no way; it was simply necessary in my particular case. The 6BA6s and 6AL5 are merely the miniature equivalents of the replaced 6SK7s and 6H6. The only possible advantage of using these newer tubes is that they may be more easily procurable nowadays and in the future. Fig. 2 shows the modified block diagrams.

The S40A rebuilding was also complicated by the fact that the bfo control (a tapped coil with front panel adjustable slug) was missing. This meant a complete redesign of the bfo using the only kind of control readily available, a variable capacitor. The bfo circuits for the S40A are shown in Fig. 3; note that the new one uses a bipolar transistor, since we no longer need to duplicate the original tube impedances. Actually, the capacitor-tuned bfo turns out to be better than the original, because the threads on the slug-tuned bfo coil are inherently sloppy and had given a rather erratic frequency versus angular variation.

The bfo in the NC57 is almost exactly the same circuit as was used originally with the half 6SL7 (triode) tube. The tube section is replaced with an FET (N-channel), and a low-voltage (+12 V) supply is used to power it. In this way, the original bfo control coil and tuning capacitor can be retained without a major change in frequency. This is due to the FET having similar impedances to those of the tube that it replaces. The circuit of the new NC57 bfo is shown in Fig. 4(b).

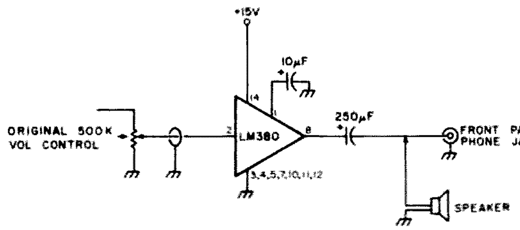

Fig. 6. New audio amplifier as used in NC57.

The solid state audio amplifier sections of the receivers are quite different, reflecting the 10-year difference in "starts of rebuilding." The S40A has an audio section that was taken from an old Japanese 5-transistor radio of the type that has virtually dominated small portable AM radio sales in this country. It originally had three 2SA-type PNP germanium transistors in the audio portion; these were replaced with 2N388 NPN germanium types to assure future replacements.

Minor circuit changes make it possible to operate the audio amplifier on the +15 V supply. Since the three-transistor audio amplifier, as removed from an existing AM receiver, is designed to have low input impedance, I had to add a high-impedance to low-impedance stage ahead of it. This allowed interfacing to the S40A circuitry directly, even using the original volume control. The source follower (2N4302), which is similar to a tube-type cathode follower, is used for this purpose. The complete schematic of the FET source follower and transistor amplifier is shown in Fig. 5(b).

The audio stage of the NC57 is very simple, consisting of a National Semiconductor LM380N and a couple of peripheral parts. The circuit is shown in Fig. 6. Note that the LM380N has high enough input impedance that it can operate directly from

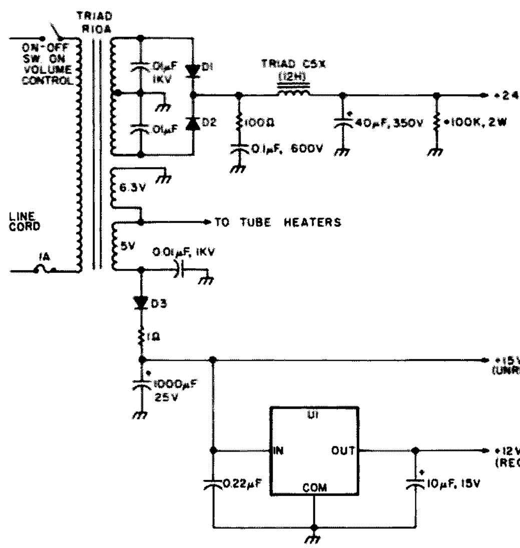

*Fig. 7. New power supply for NC57 or S40A. D1, D2 – Motorola HEPR0056; D3 – Motorola HEPR0051; U1 – Motorola HEPC6113P. *100k bleeder resistor not required in S40A.*

the NC57 circuitry.

The new power supply that was designed for use in either the NC57 or S40A is shown in Fig. 7. The 100k bleeder resistor is used in the NC57, but not in the S40A. This is due to the S40A using a 10k, 12k voltage divider across the +240-volt bus to get its +105 V line. The silicon rectifiers listed are the readily-available Motorola HEP types, but any 1000-volt, 1-Amp type could be used for D1 and D2. The 12-volt regulator (U1) is one of the newer three-terminal fixed-output types and could be replaced by any of the 7812 types as made by Fairchild, Lambda, Motorola, National, Raytheon, Signetics, or Silicon General.

Fig. 8 shows the S40A rebuilt i-f, Det, ANL section using miniature tubes in place of the original octal types. There is one correction here, where *Sams Photofact* (Set 33, folder #483-10) was in error. The difference is the avc line connects to the junction of the 2.2 meg resistor and the plate of one half of the 6AL5 or 6H6, instead of as it is shown in *Sams*. There is also another error in the *Sams Photofact* (Set 48, folder #14) on the NC57; the original bfo circuit should be as in Fig. 4(a).

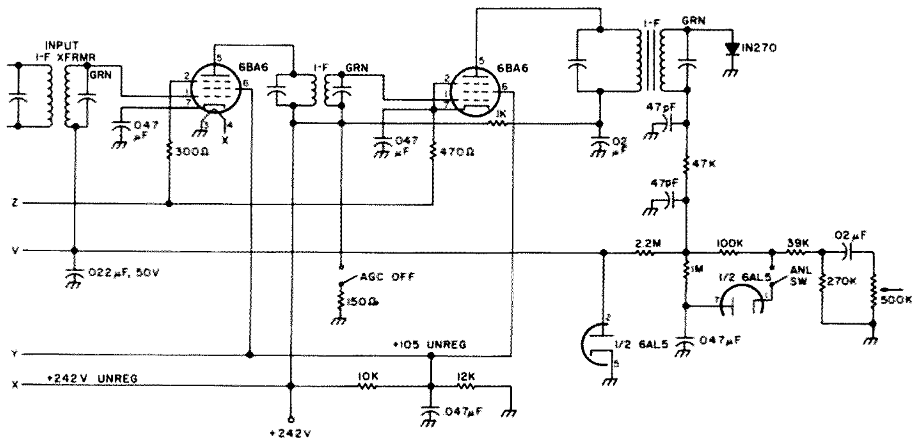

Fig. 8. I-f, Det, ANL from S40A after conversion.

Once all the circuit modifications and a check of voltages have been made, you should hear some life in the old receiver. The i-f should be aligned first, using an accurate 455 kHz generator. The bfo should then be set so as to give zero beat in the center of its tuning range. Finally, the rf section should be aligned as per instructions given in the appropriate *Sams Photofact*.

At this point, you should have a communication receiver at least as good as the one the original purchaser had back in 1949. The main difference will be that about 20 Watts of heat dissipation has been removed, more highly reliable components have been installed, and you have three fewer tubes to replace. Furthermore, you now have a general coverage receiver, an animal nearly extinct in these days of specialization. ■

Joseph J. Carr K4IPV
5440 So. 8th Road
Arlington VA 22204

Old Rigs Can Live Again!

—a guide to their resurrection

A few months ago, you received your Novice license and proceeded to go on the air. In the weeks between passing the test and actually receiving your license, you may have scrounged around hamfests, club auctions, local ham supply stores, and the basements of more seasoned veterans of the airwaves in order to locate and purchase a low-power transmitter of suitable design. In most cases, you would have dug up any of a dozen or more models popular with Novices and new Generals over the past twenty years or so. Suitable types include Heathkit models DX-60, DX-40, DX-35, and DX-20, Johnson's "Adventurer," the Eico 720, and even a Knight T-60.

And now, with that fresh license hanging on your wall, you decide to try your first contact – nothing – absolutely nothing – the old transmitter simply won't work! What do you do now?

After you recover from the jolt of disappointment, you could call another ham and ask for assistance. In fact, knowing the way hams are, it is a good bet that the help you need will be forthcoming. But how does "Tommy Troubleshooter" go about finding the cause of your problems?

The neophyte troubleshooter may watch the more seasoned veteran and marvel at the seemingly deep knowledge on display. Ol' Tommy sure knows some smoke about transmitters, doesn't he? Or does he? It may be that he knows only a little more than you and that your own grasp of theory is even better.

The level of knowledge required to troubleshoot the simple transmitter is about that required to pass the General/Technician class license examination. Of course, when dealing with high technology types of SSB transceivers, you might be right in saying that a somewhat higher technical savvy is required, but, for the present problem, any General or Technician class operator should be able to find the trouble. The only real difference between Tommy Troubleshooter and less experienced amateurs is that ol' Tommy has been nailed to the floor a few more times, figuratively speaking. Often as not, unless he makes his living in electronic servicing, he has picked up what he knows because he dared to troubleshoot his own equipment and was successful. Tommy's confidence stems from the fact that he knows that it is within the realm of possibility that he could fix something.

The MOPA Transmitter

Fig. 1 shows the block diagram of the basic *master oscillator power amplifier* transmitter design that forms the usual so-called "Novice" rig. The basic MOPA consists of two stages – a crystal oscillator and a power amplifier (also called the "final" amplifier). When the Novice of yesterday upgraded to General class status, he usually added an outboard variable frequency oscillator (vfo). An example is the popular Heathkit DX-60B transmitter coupled with their HG-10 vfo.

The crystal oscillator generates the signal using a quartz crystal resonant on the frequency of operation. This signal is then fed to the final amplifier, where it is amplified and passed on to the antenna. When a vfo is added, it simply replaces the crystal, and the oscillator circuit then acts as a buffer amplifier. Two other sections of the transmitter are the keying and power supply circuits. The keying circuit is used to turn the transmitter on and off by a telegraph key. The power supply does just that – it supplies power to the rest of the stages in the transmitter.

Fig. 2 shows a typical crystal oscillator stage such as those used for simple MOPA transmitters. In most such

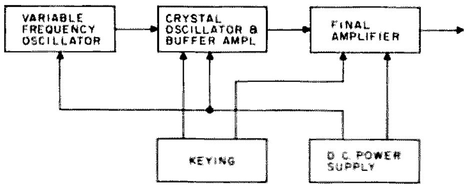

Fig. 1. Block diagram of a simple MOPA transmitter.

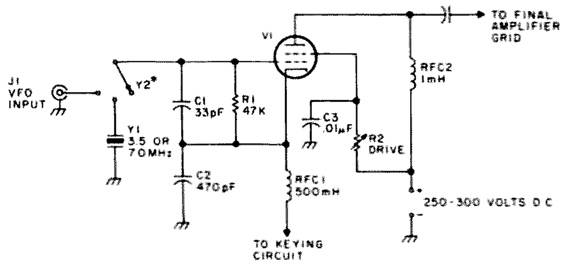

Fig. 2. Typical crystal oscillator circuit.

transmitters, a Colpitts oscillator circuit was used. The crystal switch will select from two or three crystals and the vfo input jack. In other designs, they did not use a crystal switch but, instead, mounted the crystal socket on the transmitter's front panel. Frequency changes meant removing the existing crystal and substituting another. When the vfo was used, a special plug that would fit the crystal socket was obtained. In some transmitters there was a "drive control" that set the amplitude of the signal applied to the grid of the final amplifier tube. This was merely a variable resistor in the screen circuit of the oscillator tube.

A typical final amplifier stage is shown in Fig. 3. The tube could be any of several popular types, such as the 6146, 807 (or military versions of same), and TV horizontal sweep tubes, such as the 6DQ6, 6CD5, etc. If you have to replace a tube, it is good practice to use the original type. Of course, you can replace them with others that are equivalent, but know what you are doing. You will see some tubes with the same prefix letters and numbers, but a different suffix. The rule of thumb (and it is often violated) is to replace a tube with only those with the same or later suffix letter. For example, you may use a 6146B to replace the 6146A or 6146. Try to avoid using a 6146 or 6146A to replace the 6146B. In some cases, the change in tube design that spawned the change in suffix is irrelevant, but, in others, it could be important.

All components in the final amplifier were put there for a specific purpose. Capacitors C1 and C6 were used because they will keep dc potentials out of the antenna and V1 grid circuits, respectively. Capacitor C10 resonates the coil L1 to tune the grid circuit of the final amplifier tube. Similarly, C2 tunes the plate of the tube, and C3 is the antenna loading control. Meters M1 and M2 are used to monitor dc currents in the plate and grid circuits. In actual practice, though, meters are expensive, so one meter is used for both functions. A switch labeled "grid plate" or something similar will select the current being monitored. It is also true, in many cases, that the plate meter will actually be in the cathode circuit. The cathode current is actually the sum of the plate and screen currents, but the error is small. Placing the meter in the V1 cathode circuit would avoid placing the entire plate voltage on the meter and meter switch. Resistors R3 and R4, in conjunction with capacitors C8 and C9, and rf choke RFC3 form a filter to reduce or, hopefully, eliminate key clicks.

Keying a Novice-type transmitter is usually accomplished by using one of two popular methods. In Fig. 3, the cathode keying method is used. In that type of circuit, the telegraph key acts as an SPST switch to complete the path to ground for the final amplifier and oscillator tube cathodes. This is easy and low cost, but it can result in having a relatively high voltage placed across the key terminals when the key is up – and that can deliver a nasty shock if you accidentally come in contact with the telegraph key terminals.

The alternate method is to use "grid-block" keying, such as is shown in Fig. 4. This circuit requires a dc supply that is negative to ground, often called a "C supply." When the key is in the up position, the negative bias from the C supply is applied through resistors R1 and R2 to grids of the final amplifier and oscillator circuits. This cuts off those stages and prevents their operation. When the key is down, the switch is closed, and the C supply is shorted to ground. In this condition, the stages operate normally and a signal is transmitted.

There is actually one other form of keying based on the grid-block technique. It is called "differential keying" and will use a timing circuit to turn on the oscillator a split second before the final amplifier. This will allow the oscillator to stabilize before connecting a signal to the antenna.

A typical power supply circuit is shown in Fig. 5. Although some more recent designs, or the modifications of previous owners, use a solid-state rectifier in place of the vacuum-tube type shown, most rigs will have the tube. Most transmitters in the 50- to 75-Watt class used rectifier tubes, such as the 5U4GB, the 5R4GTB, etc.

The filter section is almost always capacitor input on this class of transmitter and may or may not have a choke. In those transmitters which do not use a choke, then a resistor will take the place of L1 in Fig. 5. There may also be no voltage regulator tube in many designs.

Some low-cost transmitters do not have a fuse, incredible as that may seem. If you own one of those which does not, then install one. For about 50¢ you can obtain a good quality chassis or rear-apron-mounted fuse holder. Or you could buy one of those special line cord plugs that will accept type 3AG fuses. In fact, they will not pass current unless the fuse is in place! I personally prefer the type that mounts on the rear apron. They have a cap that comes off with a twist or two, allowing easy fuse changing.

The circuits presented thus far are considered representative of those found in the Novice transmitter. If you do not know exactly how they work, let me refer you to the ARRL publication, *The Radio Amateur's Handbook*. These circuits may or may not be the ones used in your transmitter, so obtain a circuit diagram before attempting to troubleshoot the beastie. If a letter to the manufacturer does not bring results, then try other sources. A few, very few, will be found in old

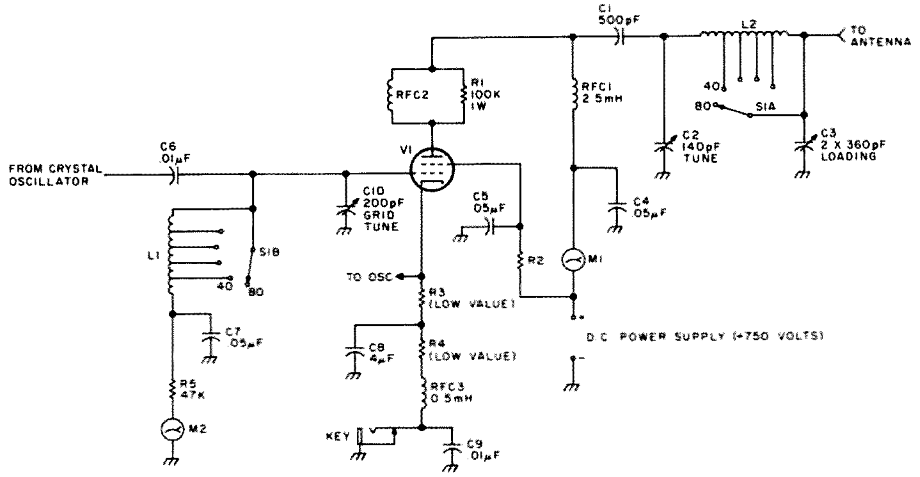

Fig. 3. Typical final amplifier circuit.

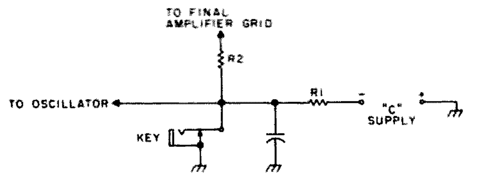

Fig. 4. Grid-block keying circuit.

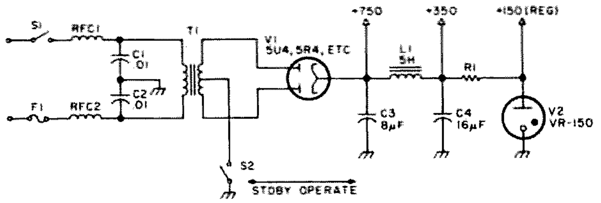

Fig. 5. Typical power supply circuit.

issues of the Howard W. Sams and Co., Inc., *Photofact* folders. Or you could bug the service or PR people at local and national amateur equipment dealers. Alternatively, there might be a local ham who owns or owned the same model. In any event, should you not be able to locate an original that you can keep, then borrow one and photocopy it at the local library or superfast print shop. It is good practice to keep service manuals for all of your ham equipment on file – just in case.

Test Equipment

Before proceeding with several actual case histories, let me offer a quick note on test equipment for MOPA service. It is not necessary to have a multikilodollar laboratory to make simple transmitter diagnoses. One item that should be available, though, is the volt-ohm-milliammeter (VOM). Although some prefer one or more of the various electronic multimeters (VTVM, FETVM, DVM, etc.), I do not like them for transmitter work. In other types of service, I not only use the electronic voltmeter, but prefer it. But, in transmitter service, there are high rf fields surrounding the meter, and that can cause many problems. The EVM class of multimeters require special probes or adapters before they will work satisfactorily in a transmitter. Low-cost imported VOM instruments can be had for something on the order of $20 to $50. Lower cost types are also available, but they tend to be too small or of inappropriate ranges for this application. The one I use was purchased for about $29 at a local ham store and is made by Calectro.

One other necessary piece of equipment is the dummy load. This takes the place of the antenna, but does not radiate power. It is discourteous, and downright illegal, to troubleshoot a transmitter while it's connected to an antenna. Some amateurs will use a 100-Watt light bulb as a dummy load. The bulb is connected to a short length of coaxial cable that is also connected to the antenna jack on the back of the transmitter. This works, but only poorly. For one thing, the bulb does not present a proper load to the transmitter. Another thing is that it is possible for that "dummy load" to radiate. Several times I have worked stations across town (5-10 miles away) which were connected to a light-bulb load. A low-cost alternative is the Heathkit Cantenna, which, as an added advantage, has a little detector circuit built in that delivers a dc voltage proportional to the rf power applied to the load.

In the desirable-but-not-essential category are several other instruments. The swr bridge/rf wattmeter (e.g., Heath's HM-102) is a low-cost example. A dip oscillator and absorption wavemeter are also good items to have. Of course, at the risk of seeming to "blue sky" too much, a wideband oscilloscope is a fine idea.

Some Case Histories

John was an enterprising fellow who camped out all night before George Washington's birthday to be first in line to buy a pile of Novice transmitters that would be sold for $1. He actually got three of them, but none of them worked, which is why they were selected to sell for $1 each. One of them would not work on 40 meters, another blew fuses as soon as the power switch was turned on, and the third produced a "T-nothing" buzz instead of the expected CW "beep-beep."

The first transmitter was fixed quickly. A little thinking goes a long way in cases like this, as do some quickie observations. It was found that the transmitter would work properly on every band except 40 meters. This kind of information will usually excite the seasoned servicer, because he knows that everything is alright except something common only to 40 meter operation. In the simple MOPA-type transmitter, it could only be something in the bandswitching or tuning inductors. We know that the oscillator is working because the upper bands work. The oscillator frequency for most transmitters in the 20, 15, and 10 meter bands is 7 MHz, the same as for 40 meters. Besides that, we can confirm that the oscillator works on 40 meters by listening to our communications receiver. The oscillator signal will appear when the key is pressed.

In this particular case, it was noted that the grid current was almost nonexistent and would not peak up. This almost entirely exonerates the plate tank and bandswitch, but it points to the grid tank. The actual problem was a poor solder connection (see Fig. 6) at the switch terminal going to the 40 meter inductor tap. This is not an unusual occurrence, actually. In fact, it may have gone unnoticed for several years, since the transmitter was assembled from a kit. Even though the original builder had failed to solder this point, it probably made good contact until corrosion took its toll and prevented the connection from passing current. To the owner, it probably looked like a "sudden" fault, so the rig was unloaded, fast.

The fuse-blowing problem could have come from any of several sources. One of course, is the power supply, but you should also be ready to consider the final amplifier tube or loss of drive from the oscillator.

Before attempting to troubleshoot a power supply, give it a looking over – eyeball it. Look for signs of damage. Potential spots might be the filter capacitors, chokes, and resistors. In the case of the capacitors, look for swelling or the leakage of inside material. Although this material may be a thick liquid, it is usually a brownish-grayish powder on the end caps of a tubular capacitor or insulator of a can type. In other components, look for signs of charring or burning. Look at the paper insulation on the chokes for charring of resistors. If this inspection fails to reveal the way to go, then it is necessary to become a little more clever.

If the fuse blows immediately when the set is turned on, then it is permissible to use a handful of sacrificial fuses as a troubleshooting technique. I know this sounds very inelegant. In fact, to some purists, it may seem kind of crude in a supposedly scientific technical field. But, while they are being pure, we will fix the rig and go back on

the air!

Remove the rectifier tube from its socket, or disconnect any solid state rectifiers. Replace the fuse and turn on power. In this last respect, let me caution you to not use the power switch, but physically unplug the set when working on the chassis. Turning it on then becomes a matter of plugging it in. If the new fuse blows with the rectifier removed, then you know for certain that the problem is on the transformer side of the rectifier. Referring to Fig. 5, disconnect capacitors C1 and C2, the rf bypass capacitors. Replace the fuse, and then plug the set back into the ac power. If the fuse blows again, then you can be certain that the problem is the power transformer. If it did not blow, however, then the trouble is either C1 or C2. An ohmmeter will tell which.

If the fuse did not blow when the rectifier was out of the socket, then the problem is on the dc side of the rectifier. At this point, I want to reiterate the fact that, though these transmitters may be low power, potentially lethal voltages lurk on that chassis. As the ARRL keeps saying, "switch to safety." When you work on a high-voltage dc power supply, there is a possibility that you will come in contact with a high dc voltage stored in the filter capacitors. This voltage may stay around for some time after the set is turned off, despite any bleeder resistors that may (or may not!) be in use. It is best to assume that the bleeder is defective and use an alligator clip lead to discharge them. Connect one alligator clip of the lead to chassis. Then connect the other end (using an insulated tool) to the positive side of the filter capacitors. Leave it there for about ten seconds and move on to the next capacitor. If you are working on a rig that has a negative power supply, or positive supplies with two or more filters in series, discharge each filter separately. I hope it doesn't have to be mentioned that it is safe to discharge filters only after the power is turned off – the plug pulled from the wall.

Before digging out the voltmeter or ohmmeter to find out where the short is located, it is necessary to try one more divide-and-conquer routine. Remove the final amplifier tube from its socket, after going through the proper discharge procedure. When the final amplifier tube is out of its socket, replace the fuse and reapply power. If the fuse does not blow, then you have found the problem. Replace that tube with a known good type. In the case of John's transmitter, a new 6146 cured the problem. In that case, the filament had sagged against the cathode and created a short circuit. This is especially likely if the transmitter had not been used for some time. In the case quoted, it was even more likely, because the tube was operated in a horizontal, rather than vertical, position. This type of defect will cause the fuse to blow immediately when the power is applied, and it may not depend upon whether or not the transmitter is in "standby" or "transmit." In some cases, though, the filament supply might not normally be grounded, so the defect does not show up until the telegraph key is depressed.

In a few cases, you will find that the problem only appears to be associated with the final amplifier tube. When the final tube is removed from its socket, the fuse blowing stops. This could be caused by a loss of drive from the oscillator. Most low-cost MOPA transmitters use grid-leak bias rather than fixed bias. If the drive signal should fail, the tube becomes unbiased, and a high plate current will flow. In most instances, though, the fuse will not blow immediately, but will take a few seconds. You will be able to see the plate *current* milliammeter rise or the tube glow red hot.

A new troubleshooter might be tempted to troubleshoot his MOPA by replacing all of the tubes, one by one. Although I could be burned at the stake by my professional colleagues for saying so, this is a technique used by many of them. It is called "shotgunning the problem." All amateurs should make it their habit to keep one each of every tube type used in their equipment – new tubes, not hamfest specials of uncertain parentage.

The last transmitter had a CW note that was T-nothing-minus. It sounded like raw ac on the plates. Although you may hear your own note on a receiver, it is possible that your first indication of trouble will be a love letter from the feds, or an ARRL "official observer." That notice of violation from the FCC may at first snap your mind clean out of its socket, but fear not – a cure is at hand.

Even if your receiver note normally sounds like about T6 because of overload, it is still possible to hear a clean note. Operate the transmitter into a dummy load, turn off the receiver avc, and turn down the rf gain. If your note sounds less than T9, then look to the filter capacitors. One of them is probably open. Bridge a known good filter capacitor across each power supply filter in turn. If the note cleans up when any particular capacitor is bridged, then that is the one; replace it. Of course, turn off the power and discharge all of the filters before making each connection with the bridging capacitor. Also, remember that the bridging capacitor also contains a charge, so it must be discharged, too.

Rules, Rules, Rules

It would not be decent of me to convince you that it is possible to fix your own MOPA transmitter without also giving you some appropriate words of wisdom and warning: That transmitter can

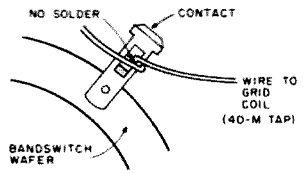

Fig. 6. No solder on the 40 meter tap killed this transmitter.

kill you! It contains lethal potentials, so be very careful, please. You would be surprised how many times I have heard some malarkey from supposedly knowledgeable people about "alleged" safety problems. One person made the comment that the ac mains power could not kill you, because it is too low a voltage, and, besides, it takes current to kill, not voltage. That reasoning can get him killed. Most electrocutions every year in the U.S. are from 110-volt mains power! Another false, and very dangerous, idea is that the +750-volt supply is harmless because it is dc. It can kill, make no mistake about that – it is a perfectly good widow(er)-maker.

A Few Simple Rules

1. Before touching anything inside the transmitter, (a) disconnect the ac power plug – do not depend upon the switch – and (b) use an alligator clip lead to discharge the filter capacitors in the power supply.
2. Never work alone. Even if your partner isn't an expert in cardiopulmonary resuscitation (CPR), he can at least pull the emergency switch and call for an ambulance.
3. Use only insulated tools and test equipment.
4. Never work when fatigued.
5. Work on a neat bench; otherwise safety could get lost in the shuffle.
6. Use a proper schematic.

One last note: Whenever a rectifier is found defective, test the power supply and final amplifier for shorts. It is possible that the rectifier didn't give up the ghost, but it was pushed by a short circuit. ■

Novices, Paddle Your Way To Happiness

—super deluxe Novice keyer

Rev. Michael Windolph WØOGX
218 W. 2nd St.
Chaska MN 55318

The Novice just getting into ham radio is often overwhelmed by the amount of equipment that is available and the high price for that equipment. It is no longer possible for the beginner to make his own receiver unless he has a ham friend to help him. Even then, he would probably settle for the regenerative beginner's model only until he could afford or borrow a better one.

It is still possible to build your own transmitter (also with a little help from a friendly ham) as long as you are going to work CW only. But going sideband is just out of reach, unless you can get your hands on a commercial rig.

Even the experienced ham today usually depends on commercial or kit receivers and transmitters, except for CW, and does his building and experimenting with other ham gear, gadgets to improve the shack or make operating more convenient, etc. Among these extra items, and one that the Novice might easily dream of graduating to, is a bug, or, even more high class, an electronic keyer.

The one described here is a good electronic keyer, one a Novice can build and get working, and even one that he can afford. The only parts you will have to buy (providing you have dismantled a few TV sets or have a supply of resistors, capacitors, wire, etc.) will be the four cheap ICs (integrated circuits), sockets for same, and a piece of perforated board (which could be made at home, if necessary). Add to these a half-dozen transistors and a couple FETs (field effect transistors), if you want the deluxe version, and you can probably buy all the parts for less than the price of a good hand key, which will cost up to $8.00.

I call it a deluxe keyer because it has touch control — which even your ham friends probably don't have unless they spent a lot of money on their keyers or are pretty good ham experimenters. Although you should have no trouble making a regular paddle

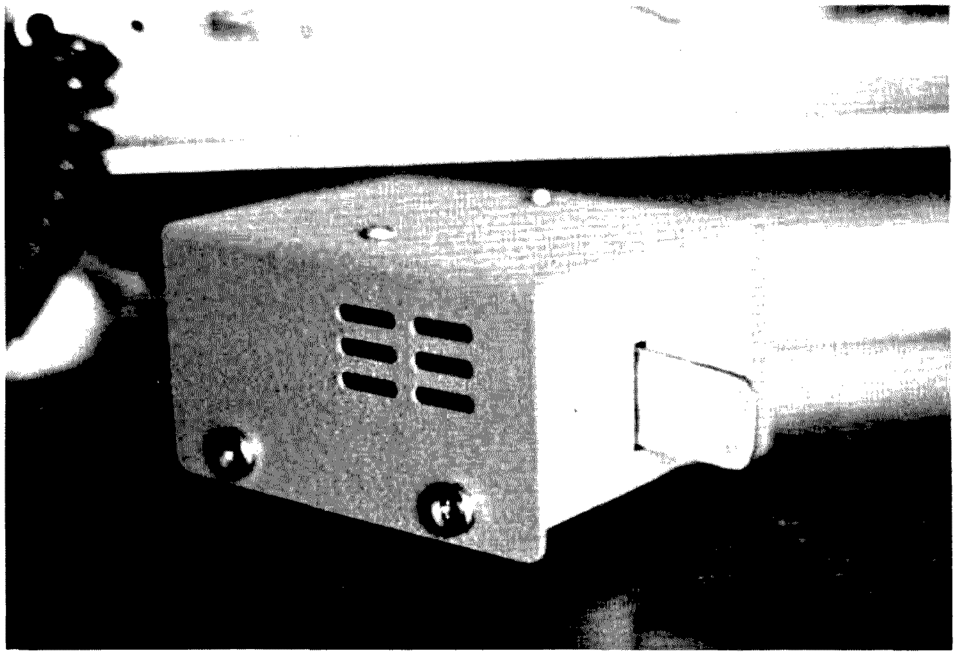

(much, much cheaper than buying one), it is even easier to make the solidly-mounted paddle for the deluxe version, as it needs no pivots or contact points — no moving parts at all. All you have to move are your finger and thumb to work this keyer. There's no paddle to push or squeeze — just a touch will do it.

The Novice, of course, has learned code at the rate of five words a minute. But it is often pretty sloppy code (witness the Novice on the air). With this electronic keyer that you can build yourself, you can learn quickly to send perfect code and take pride in that accomplishment. Anyone who has some knowledge of soldering (with a soldering pencil) and an ability to read and follow diagrams can build this keyer. It requires no printed circuit board, and all the parts can be bought very economically by mail from ads in *73 Magazine* or from your local Radio Shack.

A good feature of an electronic keyer like this is that you can set the speed of the characters at about thirteen words per minute and still send as slowly as you wish by your spacing between letters and words. This is recognized as a better way to learn the code than learning it by sending slow dits and slower dahs. Sending each character at a thirteen word-per-minute rate and slowing down only the spaces prepares you for increasing your code speed without the learning plateaus that will slow up progress to your higher class license.

There is a special feature to this keyer: It uses ordinary transistor logic, TTL, which is cheap and readily available by mail. I could have used CMOS chips and the keyer would use less current. But one big disadvantage of CMOS chips is that they are very sensitive and can easily be burned out just by handling! After zapping a few of them myself, I decided that that was just not the way to go.

Also, because the newcomer (and a lot of us old-timers too!) isn't into making printed circuit boards, I used point-to-point wiring. It might seem more time-consuming (unless you count the time making the printed board), but the equipment works just as well once it is finished. It also provides for the possibility of changing wiring, changing parts for bigger or smaller parts, etc., which you can't very well do with a printed circuit. Sockets for the ICs are, however, recommended. This makes it much easier to change chips in case one or the other gate in one IC is bad. They don't go bad often, but they are cheap, so it's better to be on the safe side.

The whole keyer can be made quite small, smaller than some of the kits on the market. I put mine in a 3 x 4 x 2 inch cabinet. If you want to include the power supply, you might want it a bit larger, however. If you make a wooden cabinet, it would be a good idea to make it in such a way that you can add some shielding (ordinary window screening) in case the rf from you rig affects the keyer. Use shielded leads from the keyer to the transmitter for the same reason, if you can find any. I had no shielding problems with my SB-104 transceiver, but you have to remember that, with the touch paddle feature, this keyer is more sensitive than other keyers. You have to be careful about what you touch — even the power leads have to be left "untouched." Touch the paddle only.

Building the keyer is made quite simple by the fact that all the parts can be anything close to the value given. There is a good 50% tolerance allowable, and the keyer will still work. So, if you don't happen to have the value that is called for on the diagram, just try something that is as

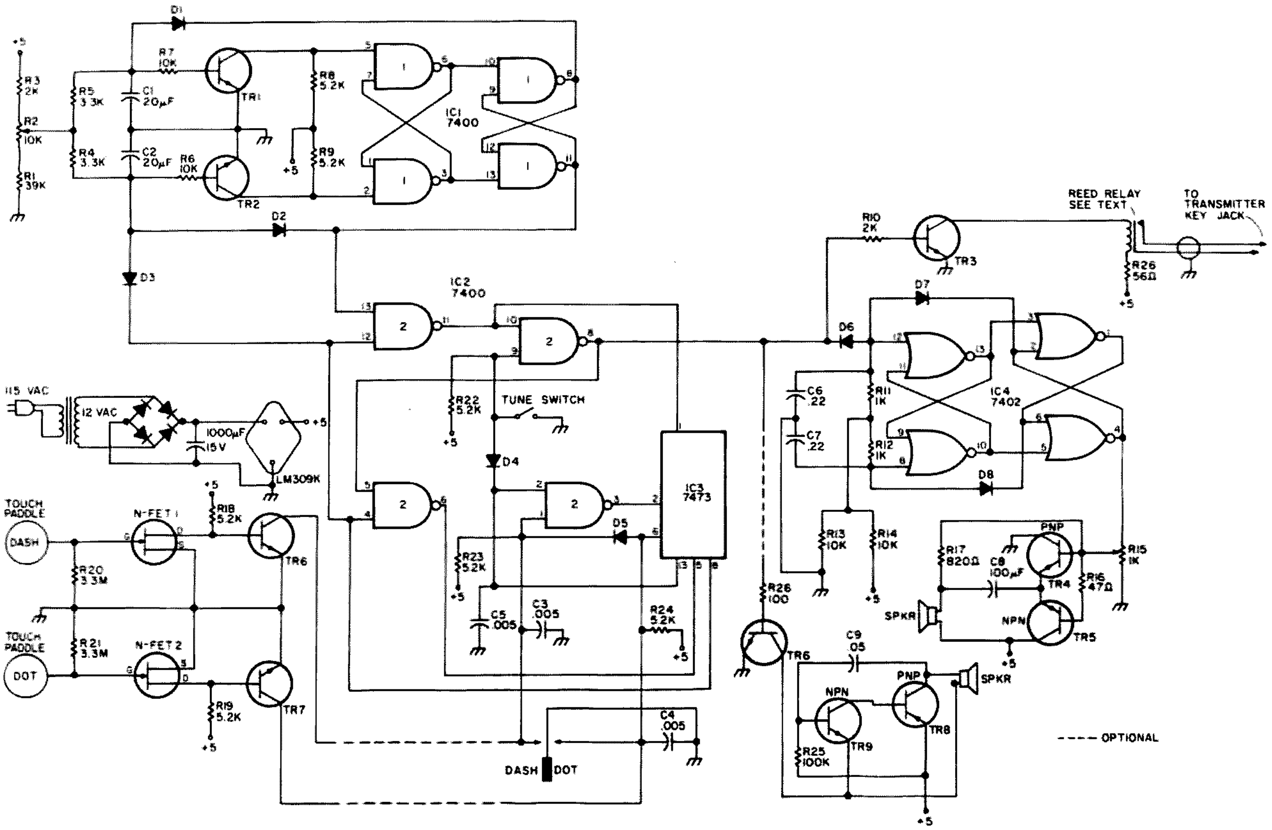

Fig. 1. Super deluxe Novice keyer. Power connections: IC1 — connect 7 to ground and 14 to +5 V; IC2 — connect 7 to ground and 14 to +5 V; IC3 — connect 11 to ground and 3, 4, 7, 10, and 14 to +5 V; IC4 — connect as IC2.

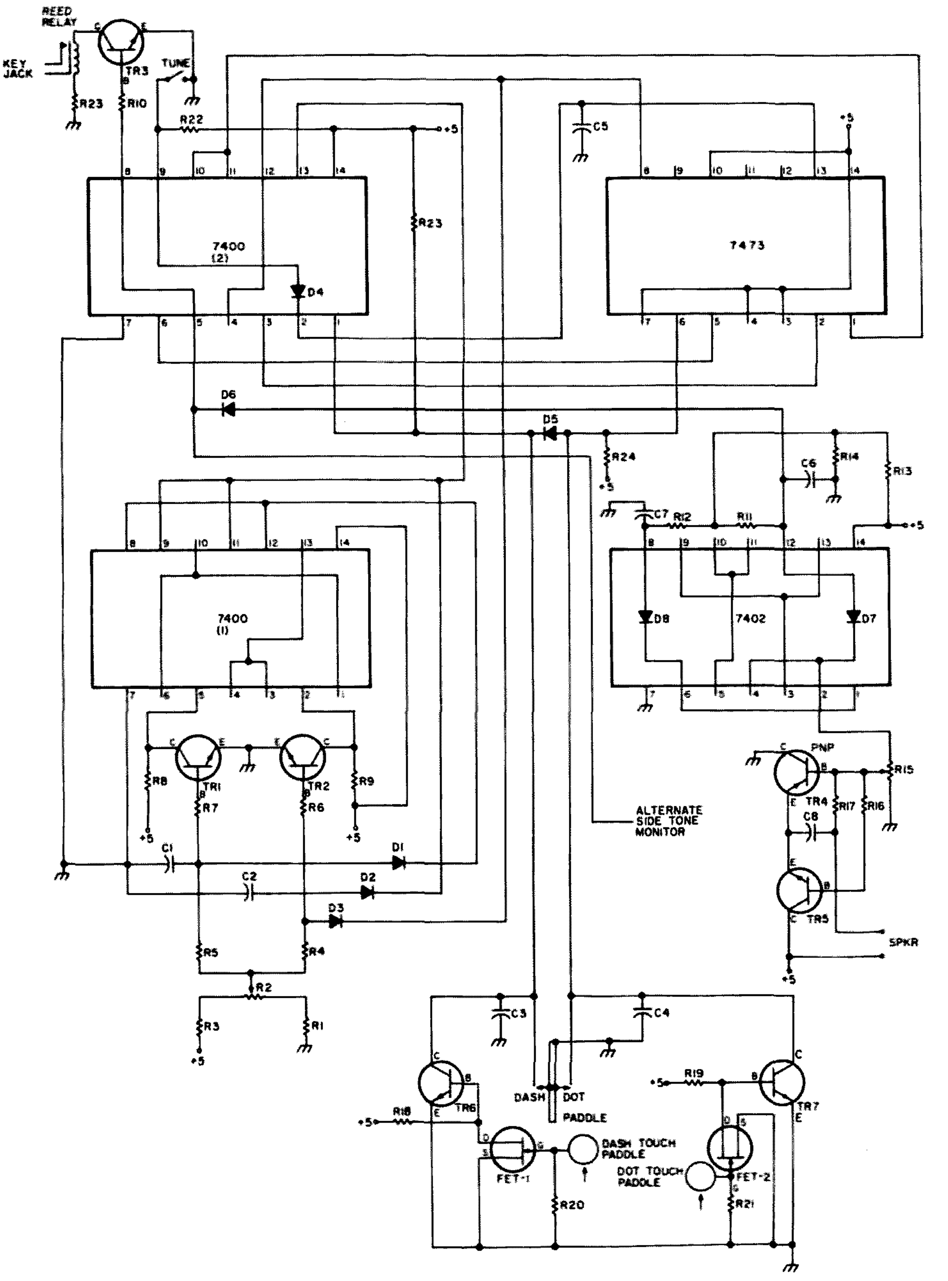

Fig. 2. Deluxe keyer wiring layout.

close as you have. It is fun to vary the parts, too — for instance, you could change the timing resistor (R2) and capacitors (C1 and C2) to get various rates of keying. Different values of resistance in the tone control (R13 and R14) also can give you a tone that you like. Use any NPN transistors you happen to have (gain is not particularly important) and, also, any PNP transistors for TR4 or TR8. This goes for the diodes used, too. I got mine by stripping computer boards. They were all FD10 types (whatever that might mean!), but any small signal diode should work well. Just be sure you install the diodes with the right polarity, as indicated on the diagram. The rectifier diodes, however, have to be capable of 500 mA, so don't use ordinary signal diodes here.

The reed relay is a mini relay sold by Poly Paks. Find the thinnest magnet wire you have around, say #34 or so, and wind about 800 turns around the glass-enclosed relay. For R26, try a couple different resistors, until you find one that gives a good closure of the relay on keying. Or skip the resistor altogether, if you don't mind drawing a little extra current.

The whole keyer, with sidetone at high volume, should not draw more than 250 mA. Of course, this will be lessened if you use the optional sidetone monitor shown on the diagram. And, of course, you will draw even less current if you skip the sidetone feature altogether and depend on an rf keying monitor on your rig for monitoring. The keyer, as good as it is, is still just a simple three-IC keyer, so it can be reduced to these first three ICs, if you wish the basic keyer alone.

The sidetone monitor, as given, is coupled directly to the last IC in the keyer itself (IC2), so the tone might change with a change of volume. If this is undesirable, you could add another IC and use two or three gates as buffers, or, preferably, find a transistor output transformer and skip the OTL (output-transformer-less) circuit used. I used it to increase the volume, as I didn't happen to have an output transformer available at the time. I've included another sidetone circuit which skips the last IC altogether — you'll have to experiment, however, to get the volume you want.

The paddle is homemade, constructed from a piece of plastic that is fairly stiff. Cut two pieces of thin aluminum to the shapes shown, one for each side of the paddle, and glue them on each side of the paddle. Note that the bolts are offset from each other. These bolts are used for mounting — using any kind of bracket you can think of — and they are also used as contacts for the paddle. One bolt contacts one piece of aluminum, and the other bolt contacts the aluminum on the other side. Then from the bolts come the leads that go to the gates of the FETs on each side of the paddle. If you don't use the touch feature, you can fabricate a paddle out of a piece of stiff aluminum or iron (like a table knife blade) by bolting the far end onto the keyer ground and putting contacts (small bolts through brackets) at the front end just inside the keyer enclosure, close to each side of the paddle. After a little use, you will find that you want the contacts very

close to the paddle so that you barely have to move the paddle between dots and dashes.

I power my keyer from my SB-104 transceiver 5-volt supply, but I've included the diagram of a simple power supply consisting of a twelve-volt transformer, rectifier bridge, capacitor, and an LM309K voltage regulator. This last insures you will get only five volts on the keyer. The ICs are not very tolerant of much higher voltages. Don't try to use a six-volt transformer, as you will have to use much more capacitance, and the keying will be erratic.

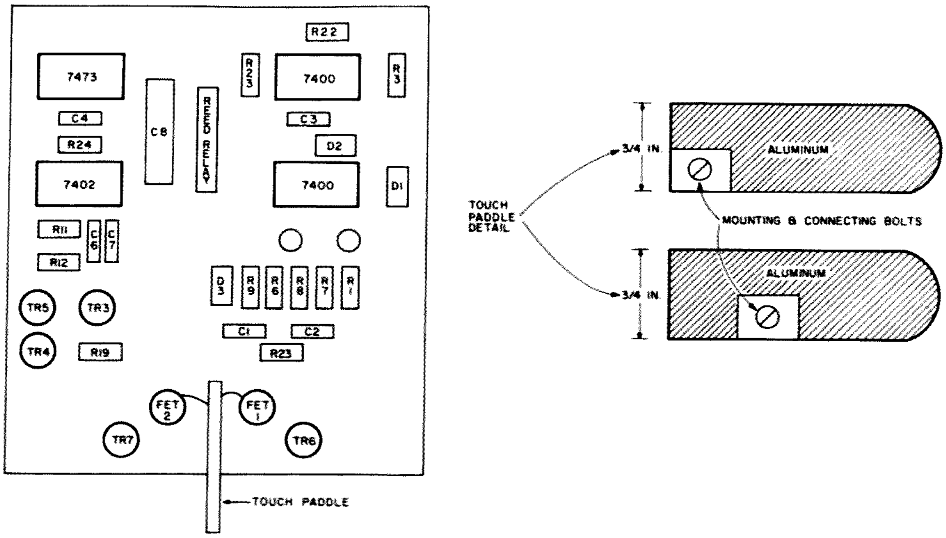

Fig. 3. Deluxe keyer parts layout.

The complete diagram of the keyer is given in Fig. 1. Fig. 2 is perhaps even more important, as it gives you the actual wiring layout to wire the parts on the board. A parts placement I used for the top of the board is given, but placement is mostly up to you. What is not indicated above chassis (board) is put in somewhere below. Don't crowd the parts. Bring out wires from the IC sockets and place the parts well away. Parts placement is not at all critical, and leaving plenty of room will make it easier to check voltages, etc., for debugging.

After wiring comes the debugging. If you go about this in a systematic way, you will have no trouble. Of course, if the keyer works as soon as you put it together, all you have to do is put it in a cabinet, and that's it. But it's possible there will be some part wired wrongly or forgotten.

First check out your input wiring. Is it really 5 volts or close to it? Then check that all the ICs are actually getting this 5 volts on all the pins listed for 5 volts. If some IC doesn't have five volts where it should, trace down your wiring till you find where the five volts disappear — it may be a capacitor that is shorted, or it may be that you forgot to wire that particular pin on the IC. After making sure of the power to all ICs, check voltages, as given in the debugging chart, for the rest of the pins with the power connected but, at first, without touching the paddle. See if the pins are high (close to 5 volts, that is, anywhere between 3.5 V to 4.5 V) or low (less than 2 V). If these are not as the chart indicates, again check the IC itself (by substituting another one, if you have one, or by begging one off some ham friend), perhaps by having a ham friend who has worked with ICs check it out for you.

If you have to check out the ICs yourself, there have been a number of good articles on ICs in *73 Magazine* that you would do well to study. Once you know about gates and flip-flops, it isn't hard to make simple checks to see if they are working or not. Remember that the IC has to have its five volts and ground connected before you can get a gate to work like it should.

Once the static condition of the keyer is checked out, you connect the paddle to ground or touch the touch paddle and check again according to the chart. On several pins, the voltages will fluctuate between zero and your full high voltage (close to five volts). However, your meter will be unable to indicate this at the keying speed. It will wobble around some intermediate voltage. This is what I mean by voltage varying with keying speed. Some pins, however, will change abruptly from high to low and vice versa, and, of course, the power connections will remain high.

The whole keyer is actually a lot simpler than the diagram indicates. I put together a demonstation model on a protoboard first, and it worked right off, even though it looked a big mess. If you leave yourself plenty of room to check it out, it will go together in a surprisingly short time. And it will make your keying sound very good once you practice a little and get to know how an electronic keyer works. Here's hoping I'll hear a lot of good CW on the bands very soon. ■

First: Check all pins that should be connected to +5 volts to see if the 5 volts are reaching these pins.

With power applied but key not contacting, check for the following:

IC1 — High (near 5 volts): pins 1, 2, 5, 6, 9, 10, and 11.
Low (near zero): pins 3, 4, 8, 12, and 13.
IC2 — High (near 5 volts): pins 1, 5, 6 (grounded when dot is sent), 9, and 13.
Low (near zero): pins 2, 8, and 12.

Power applied and either dot or dash paddle grounded:

IC1 — Pins 1, 2, 3, 4, 5, 6, 8, 9, 10, 11, 12, and 13 vary at an intermediate voltage while keying, depending on keying speed.
IC2 — Pin 1 goes low on dash.
Pins 4 and 12 go high and remain thus while keying.
Pins 5, 6, 8, 10, 11, and 13 vary at an intermediate voltage while keying.
IC3 — Pins 1 and 5 vary in voltage with keying speed.
Pin 6 goes low when dot is sent.
Pin 8 goes high and remains there while keying.
Pin 9 goes low and remains there while keying.

Table 1. Debugging chart for super deluxe keyer.

Parts List

R1	39k
R2	10k pot
R3, 10	2k
R4, 5	3.3k
R6, 7, 13, 14	10k
R8, 9, 18, 19, 22, 23, 24	5.2k
R11, 12	1k
R15	1k pot
R16	47 Ohm
R17	820 Ohm
R20, 21	3.3 megohm
R25	100k
R26	56 Ohm
C1	20 uF
C2	20 uF
C3, 4, 5	.005 uF
C6, 7	.22 uF
C8	100 uF 10 V
C9	.05 uF

Steve Shields WA0ZCR
15 Silverwood Cr., Apt. 6
Annapolis MD 21403

How Many pF Is That Capacitor, Really?

—build this simple PLL C-meter

Tucked away in our junk box someplace, most of us have jars, boxes, paper bags, or whatever of surplus capacitors – capacitors that are perfectly usable but not particularly useful because we can't decipher the color code or numbering system that designates their value. Many of us have also had occasions when we wished to twist up a "gimmick," or check the value of an unmarked air-variable, or determine the exact value of a ceramic disc before we install it in a particularly critical circuit. The more sophisticated tinkers may recall a time when they wanted to measure the stray capacitance between the leads in a wire bundle or between the foils on a printed circuit board. If any of the above situations sound familiar, read on, because here is a project to help you out of all those dilemmas. When completed, it will provide you with the capability to measure any value of capacitance between 0 pF and 1 uF by merely pushing a button and reading a meter. Not only that, the cost is reasonable, construction is quick and easy, and the parts are available from your nearest Radio Shack or mail-order parts supplier if they aren't already in your junk box.

The circuit is an adaptation of an old principle which, simply stated, says that the ac current flow through a capacitor is dependent upon the voltage applied, the frequency of the waveform, and the value of the capacitance. In this case, use of a square wave allows the capacitor to charge to its full potential and permits measurement of current flow as a linear function of capacitance.

In operation, depressing the read button applies the regulated 15-volt output of the LM78L15 to the LM566 phase locked loop voltage controlled oscillator (VCO). Regulating the Vcc input to the VCO insures that the calibration of the capacitance meter will be stable as long as the battery voltage remains above approximately 16 volts. The frequency at which the VCO oscillates is determined by selection of the proper RC combination (R1/C1, R2/C2, etc.) with the rotary switch. The square wave output from pin 3 is fed directly to the unknown capacitor whose value determines the current flow and subsequent meter reading. Rectification and filtering are provided by diodes D1 and D2 and the 30 uF electrolytic capacitor. The switch selected RC combinations provide six linear scales: 0-10 pF, 10-100 pF, 100-1000 pF, 1000

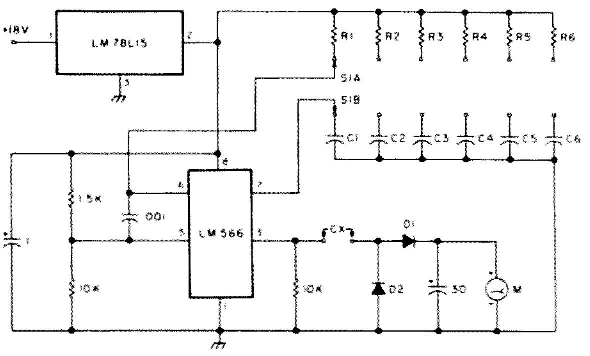

RANGE	R	C	
x1 pF	10k var.	100 pF	(C1)
X10 pF	"	.001	(C2)
x100 pF	"	.01	(C3)
x.001	"	.1	(C4)
x.01	"	1	(C5)
x.1	"	10	(C6)

Fig. 1. Note: All capacitance in microfarads unless otherwise annotated.

Parts List

Bakelite box – 6-¼" x 3-3/4" x 2"
Rotary switch – 2-pole, 6-position
Momentary switch – SPST, NO
*Precision panel meter – 100 microamps
Knob
Binding posts – red & black
LM566 – 8-pin DIP VCO IC
LM78L15 – 15 V regulator, TO-92
8-pin IC socket
Small signal diodes (2)
Printed circuit trimpots, 10k (6)
100 pF
.001 uF
.01 uF
.1 uF
1 uF
10 uF
} C1 through C6 — Mylar, polystyrene, or silver mica preferred; however, good quality ceramic disc will suffice
1 uF ceramic disc/electrolytic
.001 uF ceramic disc capacitor
30 uF, 16 V electrolytic capacitor (20 uF-50 uF suitable)
1.5k ¼ W resistor
10 k ¼ W resistors (2)
Circuit board (available from author for $5.00)
9 V batteries (2)
9 V battery clips (2)
9 V battery holders (2)/double-sided tape/Super Stuff/etc.
*Note: A 50 or 150 microamp meter can be substituted if desired.

pF-.01 uF, .01-.1 uF, and .1-1 uF. Accuracy, dependent primarily upon the tolerance of the meter and the capacitors used for calibration, is approximately ±5%. If a high quality meter is used and 1% tolerance capacitors are available for calibration, an accuracy of ±2% or better is possible.

For the most part, component selection is non-critical. The values of frequency-determining capacitors C1 through C6 may deviate from those specified by as much as 50%, but should be as stable as you can find to insure that the accuracy of the instrument is maintained under changing environmental conditions. The prototype used an aluminum electrolytic for C6 and ceramic discs for the remainder. After a night in the car at 15°F, the .1-1 uF scale read 10% low and the other scales were in error to some lesser degree until the instrument warmed up to room temperature. Diodes D1 and D2 can be either silicon or germanium, and the value of the 30 uF electrolytic can vary from 22 to 50 uF. The higher value will provide better filtering action at the low operating frequency of the .1-1 uF range, but slows the meter response when the circuit is activated. For R1 through R6, the fancier multiturn trimpots are nice and ease calibration, but the cheaper single-turn variety are more than adequate and are what the circuit board was designed for. If you're going to splurge anywhere, capacitors C1 through C6 and the meter movement are where quality counts most in this project.

Construction is accomplished by referring to Figs. 1 through 3 and the suggested front panel layout. Begin by drilling and lettering the front panel. For professional-looking results, the panel can be roughed with a stainless steel pad, or, if you prefer, sprayed with the background color of your choice.

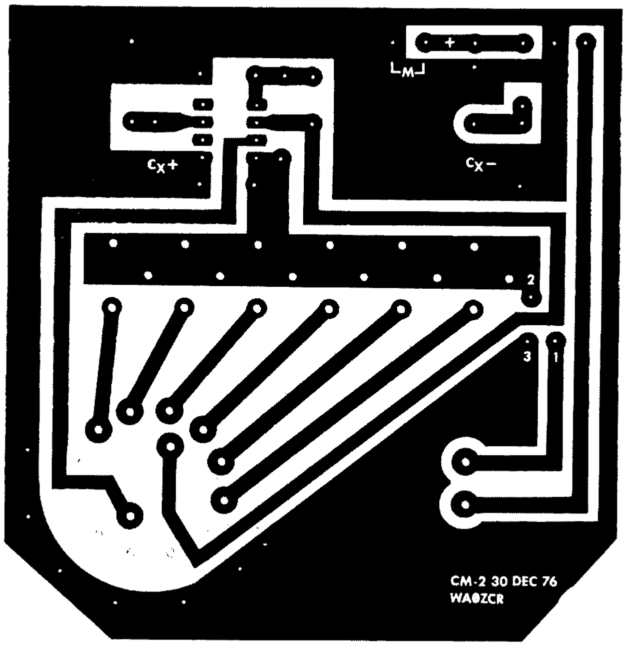

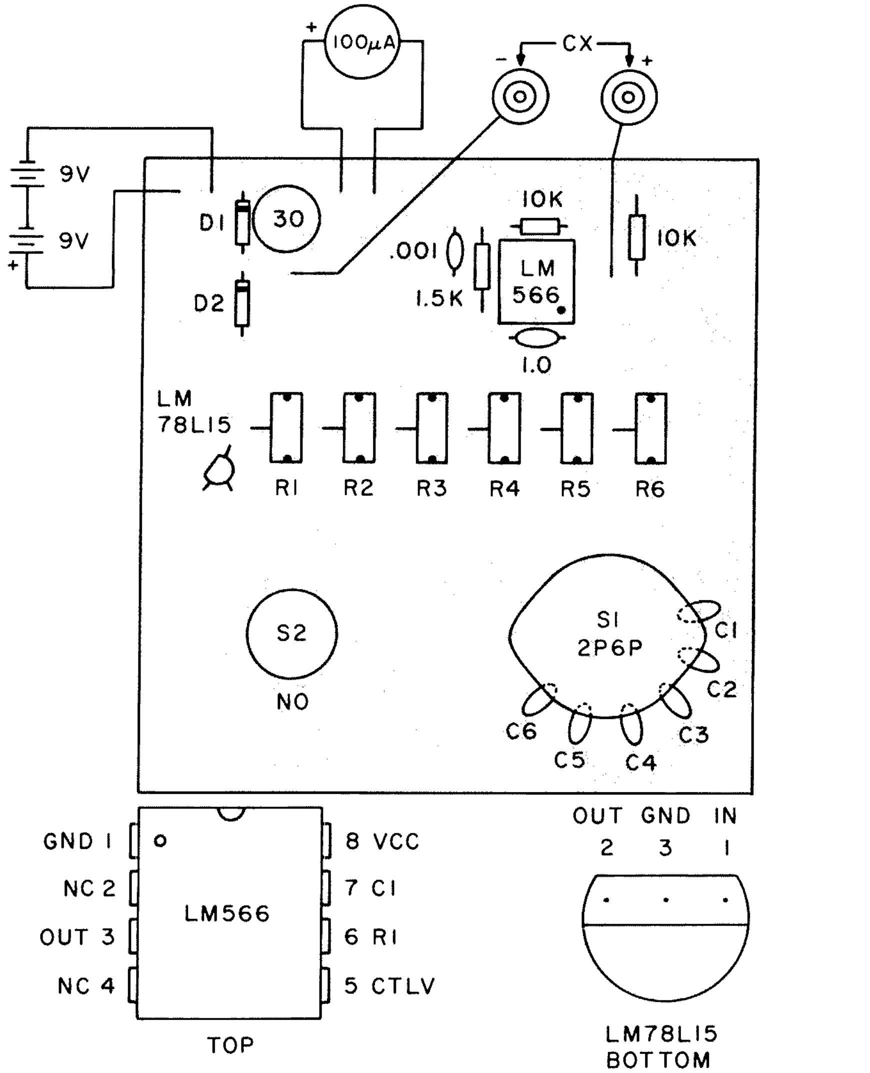

Fig. 2. Component placement. R1 through R6 and C1 through C6 mount on foil side of board, all other components on reverse.

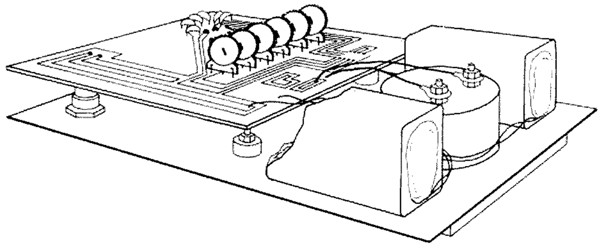

Fig. 3.

Lettering is most easily accomplished using "Dri-Transfer" letters available from Radio Shack, stationery stores, and other sources. For durability, the lettering should be sprayed with a clear protective coating such as Krylon. After lettering, install the meter, binding posts, and push-button switch, and then put the case aside for the moment.

Next install the remaining components, including the rotary switch, on the circuit board. R1 through R6 and C1 through C6 mount on the foil side, the remaining components on the reverse. The circuit board is supported by the switches and the leads from the binding posts. Solder a short length of solid conductor (a clipped-off resistor lead will do fine) directly to the tip of the screw end of each five-way binding post. Fit the board into position over the binding posts and push-button switch terminals and install the nut on the shaft of the rotary switch. Solder the leads from the binding posts and lugs from the push-button switch to the board. Connect the meter leads to the points indicated and connect and install the batteries using double-sided tape or "Super Stuff" to hold them in position next to the meter.

After admiring your handiwork, you're ready for calibration. Use the most accurate capacitors available and begin with the x1 scale (0-10 pF). Connect the calibration capacitor to the terminals and adjust R1 for a meter reading that matches its value. When you have completed this procedure for the other five scales, install the completed instrument in the case and grab a handful of those previously unusable capacitors out of your junk box. Fun, isn't it? What's really interesting, though, is to measure some that are clearly marked with the value they are supposed to be.

When measuring values of less than 10 pF, stray capacitance can be a problem, so connect the capacitor leads directly to the terminals if possible. If not, plug in a set of extension leads with banana plugs on one end and alligator clips on the other. Position them as they will be when you are making the measurement and check the stray capacitance. Subtract this reading from the indicated value of the unknown capacitor to obtain the actual value. If extension leads of more than two inches are required, the same procedure should also be used on the x10 (10-100 pF) scale.

There it is — hope you enjoy building and using it as much as I have. Now, if I could just measure inductance with it . . . ■

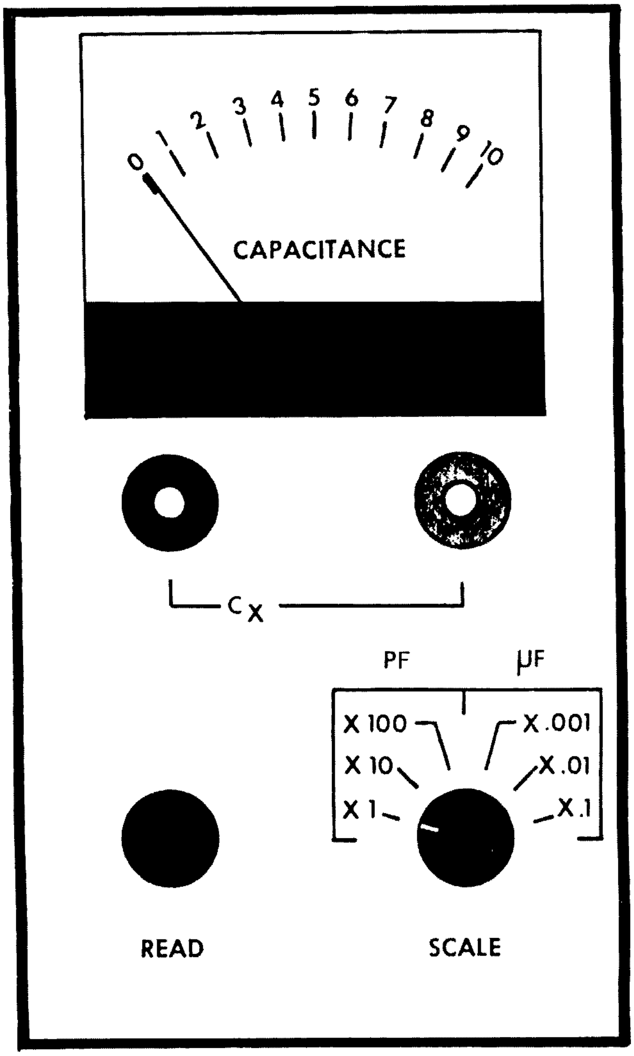

Fig. 4. Suggested front panel layout.

LETTERS

from page 34

3. The fact that there is no room to hang the chad box is no problem, because the linear amplifier is an ideal receptacle for oily chad.

Perhaps Mr. Soxman intended just to store the TTY in that location and move it to the operating surface when needed. A good idea for keeping in shape . . . an ASR-33 only weighs about 80 pounds.

I also notice that the linear amplifier is placed at the opposite end of the console from the transmitter. The fact that these units are used together functionally is no excuse to put them together physically. After all, lazy hams need to stretch their bones every now and then. What better way than to stretch out across the console while adjusting the drive to the linear amplifier?

Mr. Soxman provides us with a very interesting formula for laying out a man-machine interface. Unfortunately, a vital term has been omitted from the equation: common sense.

William L. Mahood
Falls Church VA

HERESY

As a Novice, I presume I should be seen and not heard. However, I will risk bringing the QRM down around my head by proposing additional use of CB transceivers on ten meters.

While all you good old Elmers are trying to get more activity going on ten and find a use for all the good transceivers lying around, why not carry your frequency allocation proposals a little further than 28.965, 28.255, etc., etc.?

I would propose an expansion of the ten meter Novice frequencies to include 28.2-28.4 as crystal control, 10 Watts max. input, AM phone operation. My reasoning for this proposal is based upon my belief that it would create additional activity on ten and thereby possibly ward off loss through WARC rulings. It would provide addi-

Continued on page 55

Exorcising Power Supply Demons

—what to do when Murphy visits

Joseph J. Carr K4IPV
5440 So. 8th Road
Arlington VA 22204

It seems absurd that most novice troubleshooters will usually overlook the power supply as a source of trouble, especially if it is producing a dc output. The truth is, however, that the dc power supply is implicated in a majority of the faults found in most classes of electronic equipment, which includes equipment found in most amateur stations. Most of us take the power supply for granted, especially if it is producing dc, and will try looking elsewhere for the trouble. But if we take the trouble to look at the supply waveforms with an oscilloscope — and know what we are looking for — we can solve many of the troubleshooting problems that previously seemed difficult.

Modern electronic equipment is operated from voltage-regulated power supplies far more often than was true of the vacuum tube equipment of yesteryear. One of the most useful features of such supplies is that the ac ripple component normally encountered in rectifier circuits is almost completely suppressed by the regulator. Even those unregulated supplies which have a large filter capacitor will not hold a candle to "less-well-filtered" supplies that have lower value electrolytic filters but do have a regulator section.

Fig. 1 shows the block diagram of an electronically-regulated power supply. The regulator circuit might be any of several well-known multi-device circuits, or it might be a three-terminal IC regulator, such as the LM309, LM323, LM340, or 7800-series devices.

The waveforms to be found at points A and B are shown in Fig. 2. We can legitimately compare these voltages, because the oscilloscope was a dual-trace type, and the vertical amplifiers were adjusted to have the same sensitivity (vertical volts/cm).

The top waveform in Fig. 2 shows the ripple waveform present at point A in Fig. 1. This is the output of the bridge rectifier, although the same waveform is also found with regular full-wave rectifiers. The bottom waveform in Fig. 2 shows the ripple component at the output of the regulator circuit. This is the waveform of the voltage actually applied to the circuits being served by this power supply. Note that, on the same voltage scale, this waveform appears to be very nearly pure dc. Of course, if we increased the amplification of the vertical amplifier on the oscilloscope, we would see some ripple. It is, though, so low as to be almost ineffectual in most applications. This phenomenon is the basis for the claim by some manufacturers that they have an electronic circuit in their power supply that acts like a very large capacitor. One power supply used extensively as a battery eliminator by mobile servicers was touted as having the "equivalent of one farad of filter capacitance," but what they really had was a very effective voltage regulator circuit!

Whether IC or discrete components are used, it is usually the case that most low-cost regulators use a series pass transistor with its base contolled by a zener diode. If the regulator were to become defective because the series pass transistor shorted or the zener diode opened up, then we would find a high ripple component at both points A and B. Also, the dc voltage at point B would be excessive. The symptoms this causes will vary, depending mostly upon the type of equipment the supply serves and the nature of its circuitry.

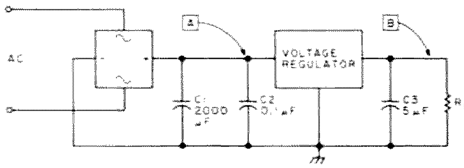

Fig. 1. A block diagram of an electronically-regulated (voltage) power supply typical of most modern solid state equipment.

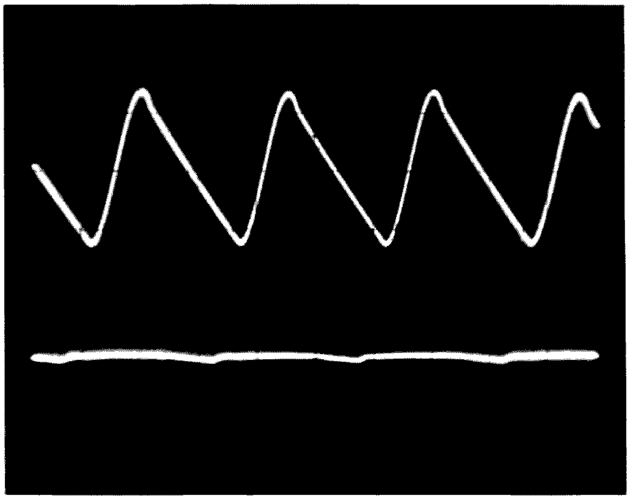

Fig. 2. Waveforms produced by the circuit in Fig. 1. The top waveform shows the ac ripple component at point A in Fig. 1. The lower one shows the ripple waveform at B, after the regulator.

In a receiver, for example, you might notice an audio hum in the output or a shift in dial calibration, because the local oscillator was "pulled." In a TV receiver, there might be one or two black "hum bars" slowly rolling up the picture. A sideband transmitter might produce out-of-calibration output for the same reason, or there might be hum on the modulation. On other types of equipment, there might be any of a wide variety of symptoms too numerous to catalog here. The one underlying common ground for many of them, though, is that they are weird and seem unexplained by the failure expected of standard parts in the circuits themselves. For this reason, it is recommended that the power supply be checked first. I keep service records on medical electronic equipment and have found, for a full year's work, that the power supply was the culprit in over half of the cases!

Another set of gremlins appears as a result of power supply turn-on and turn-off. We should be very interested in just what happens to the power supply at the instant of turn-on, because it is a very dynamic time for many electronic circuits. The turn-on waveform often reveals some very difficult-to-locate problems.

Fig. 3 shows the normal rising waveform of a positive power supply that is mostly resistive (little filtering). Fig. 4, on the other hand, shows the damped waveform to expect when turning on a high-capacitance power supply that has a high time constant. This particular waveform was taken in a supply that used a 3000 uF capacitor and a 68-Ohm resistor (in place of the choke).

Ordinarily, this type of information is of little interest, but occasionally we see a piece of equipment or a circuit where it becomes an important factor. Two different types of problems are involved here: latch-up on t/on and intermittently blowing certain solid state devices. Such circuits generally use dual-polarity power supplies and may have operational amplifiers or other linear IC devices. In other cases, though, the performance of the IC version is approximated by a discrete circuit of diodes and transistors.

The root source of the problem is having two opposite-polarity power supplies, one of which lags a little bit behind its companion at either turn-on or turn-off. An open capacitor will substantially reduce the time constant of a power supply. Figs. 3 and 4 show the rise characteristics of resistive and capacitive power lines, respectively. Ordinarily, power supplies for solid state circuits will more likely resemble the latter, unless the power supply capacitor is open. This type of problem can be diagnosed best on an oscilloscope, preferably a dual-trace type with one input on each of the two supplies. Examine the rise times to see if they are approximately equal.

Similarly, you should also consider what happens at turn-off. This is especially true in dual-supply IC circuits; in fact, it is often critical.

Most IC devices have PN junctions between the active transistors and other components of the device and the substratum of the IC on which it is built. In normal operation, these PN junctions (in effect, diodes) are reverse biased, so they are inert in the circuit, save for a minute leakage current, if any.

In certain IC circuits, particularly those with dual-polarity dc power supplies, certain conditions can cause this PN junction, or diode, if you prefer, to become inadvertently forward biased. Under this condition, if sufficient current flows, the IC will be destroyed.

A common type of linear IC circuit configuration is shown in Fig. 5. Device U1 is any of a number of IC amplifiers or signal processor devices. For purposes of this discussion, though, we will not worry which it is, because the problem is generic to a large class of circuits and devices that uses dual-polarity supplies.

In this particular circuit, there are three sources of rather substantial current flow: Vcc (+), Vee (-), and the charge stored in capacitor C1. If the Vcc and Vee supplies decay unequally, then there might exist a brief moment in which the voltage between one power supply terminal and the top of C1 is opposite its normal relationship. In most cases, especially op amp circuits, the particular failure mode seen most often is reversal of the relationship of the Vee-C1 voltage. This may forward bias the substratum diode and allow a current to flow that is great enough to destroy the IC. In this type of failure, the probability of damage is directly related to the decay-time lag and the value of C1. Large values for C1 mean that more charge can be stored and will be discharged more slowly. This type of problem is seen most often in those circuits in which either Vcc or Vee is a lot less loaded than the other supply. An

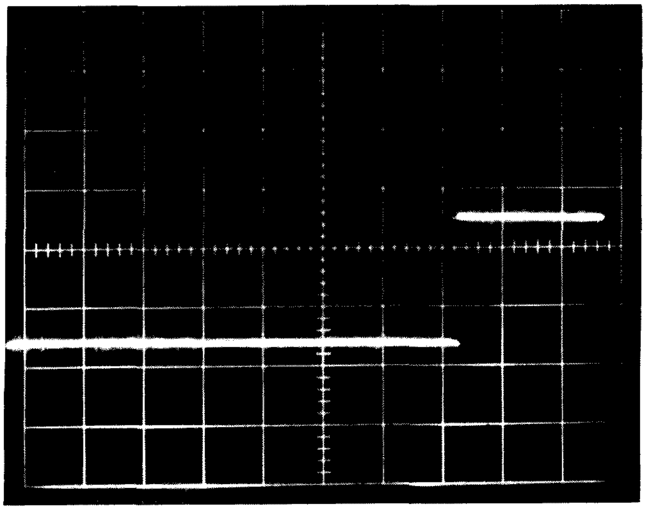

Fig. 3. Normal waveform of a positive power supply with a short time constant.

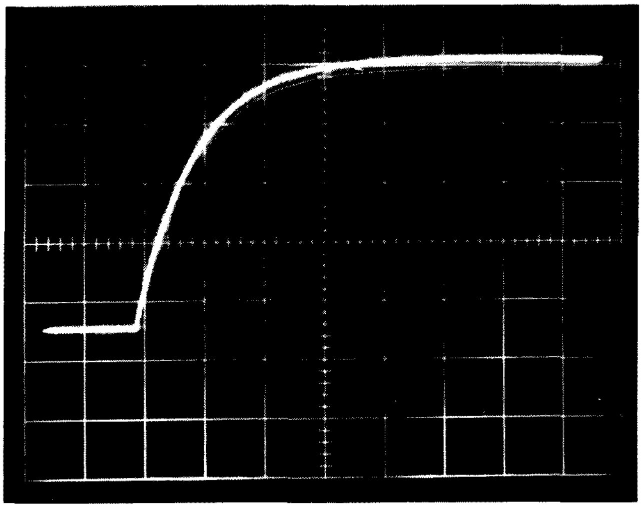

Fig. 4. Waveform of a power supply with a long time constant, as might be found in most circuits.

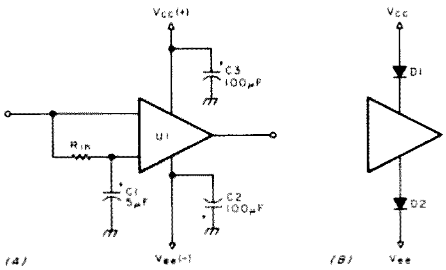

Fig. 5. (a) Common type of linear IC circuit configuration. (b) Diode protection against reverse current flow if Vcc or Vee decay too slowly relative to the other. D1,D2 – any of the 1N4000 series.

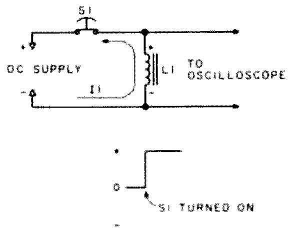

Fig. 6(a). When S1 is closed, current I1 flows through L1, creating a magnetic field around the coil.

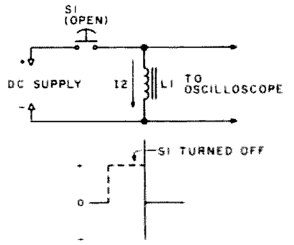

Fig. 6(b). When the switch is opened, the field around L1 collapses and a reverse current flows, creating the inductive kick spike.

example, of course, might be microprocessors that use ± 12 V dc supplies and load the -12 less.

If an oscilloscope examination reveals substantially different power supply rise or fall times, especially the latter, then suspect this as a possible cause of recurrent IC failure.

The best cure for the problem is to find out exactly why the two supplies decay in an uneven manner. In normal operation, we can reasonably expect both supplies to decay more or less equally. A defect in an electronic regulator circuit or an open filter capacitor may tend to upset this balance.

Another cure may be to modify the circuit to prevent the reverse current flow through the IC. It is, after all, that current flow that causes the damage. This may be especially appealing if there is nothing wrong with the supplies and it is suspected that the uneven decay is due to either their respective designs or an unbalanced load requirement. The particular modification is shown in Fig. 5(b), and consists of two solid state diodes connected with their polarity arranged so that only current of the correct polarity can pass. If you inspect the circuits of many pieces of equipment using dual supplies with either operational amplifier or discrete circuitry, you will often see diodes that seem about as effective as a block of wood, because they are reverse biased in normal operation. It is precisely this type of thing that those diodes are used to guard against.

Now let us look at one last class of gremlin that can arise from either the power supply, electromechanical devices in circuit, or from situations where a squarish blast of current is applied to an inductive component such as a TV receiver yoke or power supply choke.

A phenomenon called by some "inductive kick" is shown in Figs. 6(a)-6(c). Consider a series circuit consisting of an SPST push-button switch (for rapid, pulse-like action) and an inductor. This circuit, as shown in Figs. 6(a) and 6(b), is connected across a dc power supply. When switch S1 is closed, a current, I1, will flow, and this builds up a magnetic field around L1. But when S1 is released, as in Fig. 6(b), the current flow ceases, and a reverse current is found to flow in L1 that creates a large voltage spike across L1. This is not the fault of the CEMF, for, by Lenz' Law, the CEMF will oppose the decay, so it is series-aiding. The voltage spike is of opposite polarity, so it is due to the fact that electrons had tended to pile up at the inductor's upper end while the dc power was applied. When the power is removed, these electrons seek to reestablish neutrality, so they rush through the coil in the opposite direction from the initial current flow. Since the voltage is equal to L (dI/dt), and the rate of change (dI/dt) is typically very high, then the voltage is also very high. An oscilloscope photograph of the circuit action is shown in Fig. 6(c). I used a heavy 5 H choke for L1. Note the voltage spikes on the trailing edge of each pulse.

Next let's consider the type of circuit shown in Fig. 7. This is essentially the same as that of Fig. 6, except that a capacitor is in parallel with the inductor, and that complicates matters a little. Keep in mind that the coil in these examples could be a relay coil, solenoid, or other electromechanical device, or a TV monitor flyback transformer hit by horizontal deflection

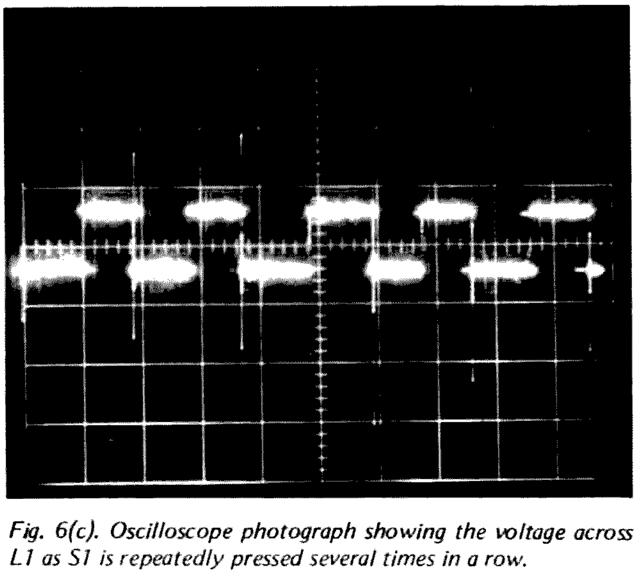

Fig. 6(c). Oscilloscope photograph showing the voltage across L1 as S1 is repeatedly pressed several times in a row.

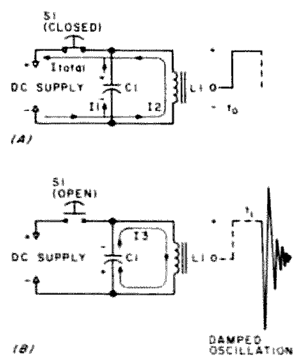

Fig. 7. (a) When S1 is closed, we have the same action as in Fig. 6(a), but the capacitor also charges. (b) In addition to the inductive kick, we get a damped oscillation on the trailing edge of the waveform.

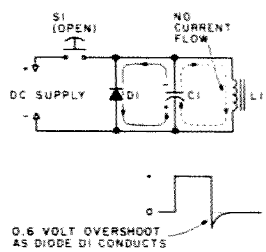

Fig. 8. A diode is used to suppress the inductive kick spike.

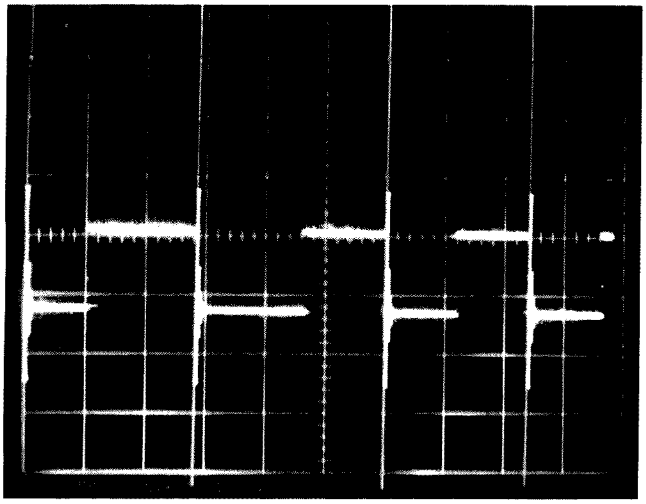

Fig. 9(a). Waveform produced if D1 (Fig. 8) is open or missing.

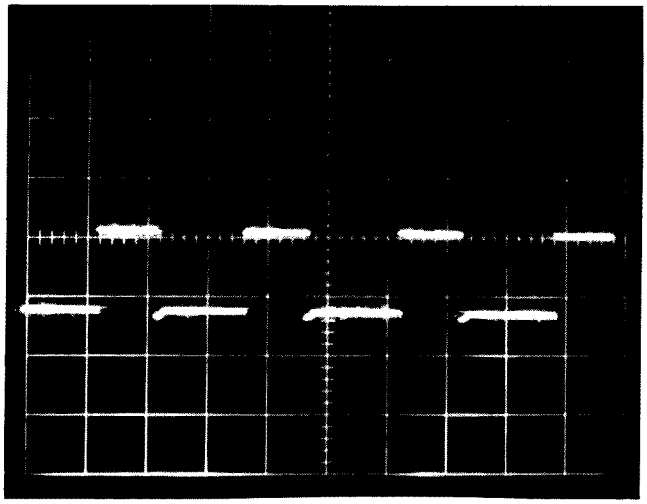

Fig. 9(b). Normal waveform when D1 is doing its job. The spikes produced in (a) will reset flip-flops, increment counters, and may destroy some IC and discrete semiconductor devices.

pulses.

In Fig. 7(a), the switch S1 is depressed, and the current is turned on. The applied voltage charges capacitor C1 and creates a magnetic field around L1. The output voltage at this point is the battery voltage. The waveform occurring at the instant of turn-on is shown in the figure.

In Fig. 7(b), the switch is released and the current from the supply is turned off. The capacitor C1 discharges, and the magnetic field around the coil collapses. The combined current from the coil's collapsing field and the capacitor discharge will conspire to produce not only the inductive kick phenomenon, but also a brief damped oscillation.

A diode (D1 in Fig. 8) is usually placed in such circuits to eliminate or suppress the so-called inductive kick. If the diode were to open (and that does happen), the spike would be allowed to get into the circuit, because it is not suppressed. This could easily create a "glitch" that scrambles the brains of finicky high-frequency digital circuitry and may destroy some types of solid state devices. In the digital case, we find the spike getting into, and resetting at inopportune moments, flip-flops and counters. In other cases, especially where MOSFETs or CMOS chips are used, the device might be destroyed. The spikes shown in the waveform photographs only appear to be about 50 volts, but this is deceiving because the Polaroid film I used would not "write" fast enough to capture the whole spike amplitude. In actuality, it was over 200 volts! This could easily destroy unprotected CMOS or MOSFET devices.

In Fig. 8, a diode (D1) has been added to suppress the spike. Now when the switch is released and the current is turned off, the capacitor discharge and inductive kick will forward bias the diode. Once the spike voltage gets to approximately 0.6 volts, the diode will start to conduct and effectively clamps the voltage. The waveform produced by this action is also shown in Fig. 8. Actual oscilloscope waveforms produced by a circuit such as that described are shown in Fig. 9. In each case, the push-button was pulsed on and off a few times while the scope swept across the screen once. Note that the leading edges are missing, but this is due to the rise time of my elderly Tektronix plug-in and the speed of the film emulsion. Fig. 9(a) shows what is seen if diode D1 were open, or missing, while Fig. 9(b) shows the waveform in a normally operating circuit.

At this point, let me point out that these problems are real-life, not textbook, problems which I encountered in my day-to-day work. They are also very difficult, perhaps almost impossible, to find without an oscilloscope. Mine is only an old 650 kHz model, so no high-technology, multi-kilodollar investment is required. For this reason, let me nudge you toward ownership of such an instrument — even if only in partnership with another amateur or your local club. ■

LETTERS

from page 50

tional incentive, as in "incentive licensing," provide practical application of theory vs. appliance operation via the reworking of low-cost available equipment, and provide valuable training in the fine art of proper phone operation!

Now that I have voiced unmentionable heresy, I will dismantle my antennas, pull my finals out of the old B&W, and hide in the basement until the wrath of my peers hath dissipated.

By the way, Wayne, you and the *Drum* look to be in pretty good shape.

Bill James WDØAUU
Denver CO

EXTEND 20

With regard to your idea to extend the 20 meter phone band to 14.1, I am for it 100%.

I have done considerable operating from Gibraltar as ZB2CS. Much to my surprise, I found most Europeans and Africans above 14.2, and very light activity in 14.1/14.2. In trying to work other DX, the main problem was powerful Italians and Germans dominating the frequencies — not Americans. I would like to see the American section extended to 14.125, and 14.100 to 14.125 reserved for low-power split DXpedition operation and "rest-of-the-world" types who don't want W/K breakers. Most of the "rest of the world" is talking to W/K a lot of the time, anyway, and the variations in propagation provide a curtain of privacy at other times. I would be glad to serve as an originator of a petition for this purpose and receive mail in support of the idea.

Ronald C. Williams
1147 N. Emerson
Indianapolis IN 46219

BETTER FROGS

My two *73* articles concerning the Yaesu FRG-7 receiver have drawn considerable mail, indicating a wide-

Continued on page 87

Ronald Starr K0OXB/5
12309 Split Rail Parkway
Austin TX 78750

Meet the Plastic Wonder

—*quad antenna*

Why not glue your next antenna together? The cubical quad antenna uses a quick and easy method of construction that provides an almost ideal quad structure, yet bypasses traditional materials and metalwork altogether. Cubical quad antennas offer a combination of DX performance and economy of construction that's hard to beat, especially at modest antenna heights. The use of plastic water pipe and fittings is the key to an antenna of exceptional performance, long life, and a construction cost of less than $25.00, using readily-available materials from any lumber yard or building supply.

A new QTH provided the challenge to design an efficient HF antenna system from scratch, yet stay within a total outlay of $100. From a review of current antenna literature, especially Bill Orr's excellent work on quads,[1] it seemed a dual-band 10/15 meter quad offered the best compromise between physical size, cost, antenna height, and expected performance. Quad construction articles usually suggest two alternatives to the crossarm problem — bamboo or fiberglass. Since both materials were unavailable locally, I decided to adapt common polyvinyl plastic pipe, known as CPVC, to fashion a sturdy framework. A check with the local building supply revealed standard 10-foot lengths were less than $1.50 per section and that a complete assortment of fittings to fashion any desired configuration was available. PVC boasts many useful characteristics for antenna construction, including excellent strength and dielectric properties. Its only drawback is a lack of rigidity in very long lengths.

I chose half-inch PVC for the prototype antenna as the best compromise between weight and rigidity. Crossbraces constructed of T-fittings on each arm provide the key not only to achieving the extra crossarm length, but also to a rigid and sturdy structure. Standard quad dimensions were used, as indicated in Fig. 1, with a boom spacing of 5 feet chosen to coincide nicely with standard lengths of PVC stock. See the parts list for the materials I selected.

Construction is quick and easy, since no metalwork or fabrication is involved. In fact, this quad is literally glued together with PVC cement — a joint that is extraordinarily strong. Construction begins by sawing the stock to proper length with an ordinary hacksaw. Saw two 10-foot sections in half, and lay them aside as four crossarm braces. Saw eight 4-foot sections from four 10-foot sections, and lay them aside for end extensions. Saw the 10-foot section of conduit in half, and save a 5-foot section for the boom. Carefully mark the center of the four remaining 10-foot sections of PVC, and drill 2¼-inch holes corresponding to the TV mast clamp U-bolt ends and straddling the center line. These sections will be the basic crossarms and are attached perpendicularly to the boom and one another.

Carefully study the quad diagram, Fig. 2, once more, and visualize how the structure will appear when finished. Once the gluing begins, mistakes are tough to correct, because PVC cement is quick and permanent. All rough saw cuts on the PVC ends should be smoothed with a file and knife to avoid interference

	Side dimension	Point of loop attachment (from boom center)
10 meter director	8'8"	6'2"
10 meter reflector	9'1"	6'5"
15 meter director	11'8"	8'3"
15 meter reflector	12'3"	8'7"

Boom length is 5', allowing a few extra inches on each end to accommodate clamp attachment.
Holes for passing quad tie loop anchors through the crossarms should be drilled approximately 2" beyond the dimensions given above for points of loop attachment to allow for loop straightening and tension adjustment.
The reflector dimensions above are for a closed-loop reflector — once the loop is stretched in place on the crossarms, the wire ends should be joined with a securely soldered joint.

Fig. 1. Dual-band quad construction dimensions.

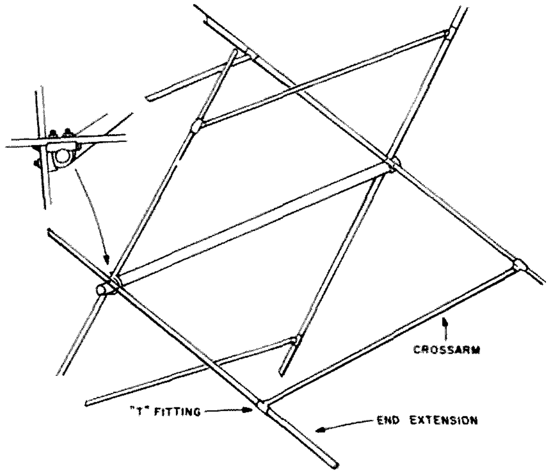

Fig. 2. Quad assembly via glued T-fittings.

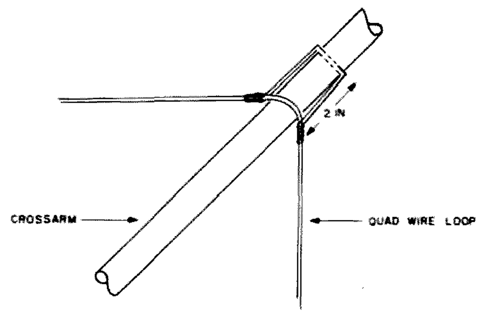

Fig. 3. Suggested method of loop attachment to crossarm.

and possible misalignment during the gluing process.

Begin the actual assembly by bolting the director and reflector crossarms to each end of the conduit boom, keeping each arm in the same plane as its opposite counterpart and perpendicular to the others for quad symmetry. Snug the TV clamps tight enough to prevent rotation, but don't overdo it – the plastic pipe can be split.

With a 5-foot crossbrace in hand, glue the center opening of a T-fitting to each end of the pipe, remembering to keep the straight-through openings in line with each other. Otherwise, misalignment here will ruin final quad symmetry. Follow cementing directions on the can, and don't overdo it, as the cement truly welds the pipe and fittings together.

Each crossbrace is then glued to join opposite ends of the basic quad framework, forming two large intermeshed rectangles. Finish the structure by attaching the eight 4-foot extensions to the remaining opening in each T-fitting.

Suggested measurements for points of wire attachment are noted in Fig. 1. The quad wires are attached to the frame by a length of solid copper wire passing through a small hole drilled through the crossarm and tightly wrapped as shown in Fig. 3. If the quad loops for director and reflector are premarked for points of attachment, it's easy to lay the loop on the frame, snug up the loop evenly with the wire attachments, and then twist the loop anchors snugly when things look symmetrical. No soldering of the quad loops is necessary, as a firm twist of the loop anchor provides all the security required.

After using various methods of feeding the director loop, I've settled on tying the 10 and 15 meter loops together via a W2AU balun and using a single 52-Ohm coax feedline. Although gamma-matching through separate feedlines is the preferred method, the extra expense and bother are not justified by the increase in efficiency. The swr bridge is happier, to be sure, but actual on-the-air signal reports show absolutely no difference between the two methods.

The light weight and small wind load area characteristic of quads become important advantages when a supporting structure is considered. In my particular installation, only a 50-foot telescoping TV mast and light-duty rotator would allow me to stay within the proposed $100 budget. Since the quad configuration will not allow guying any closer than 6 to 7 feet from the mast top, don't try to gamble on the strength of the mast top section. Rather, telescope the top two sections together, pin with a bolt, and rest assured that proper and secure guying will keep the antenna in place in anything short of a hurricane. The quad boom is attached to the rotator shaft via a ¼-inch drilled iron plate mating to a 1¼-inch pipe flange welded to the rotator shaft top and joined by two TV mast clamps. If the stark white color of CPVC is bothersome, various types of spray paints do stick well to a clean surface. It would be wise to avoid the metallic pigment paints – no sense introducing

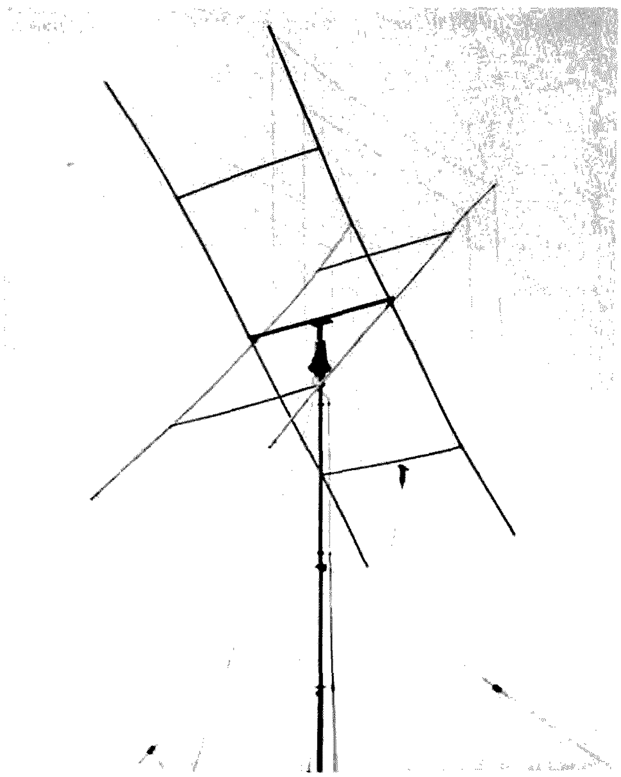

Parts list

10	10-foot lengths of 1/2-inch CPVC pipe
1	10-foot section of 1½-inch electrical conduit (known as EMT) for the boom
8	1/2-inch PVC T-fittings
1	small can of CPVC cement
4	TV mast clamps (Radio Shack clamps at $.69 each do the job well)
167	feet of heavy-gauge stranded (preferred) or solid copper wire for the quad loops
10	feet of heavy-gauge solid copper wire to anchor quad wires to the crossarms

any electrical headaches or possible compromise of performance at this point.

So, how does the project work? After being a confirmed beam fan for many years, the performance of this simple design has been most gratifying. Barefoot operation with a Kenwood TS-520 has provided the fun of DX operation on a limited budget – if only 10 meters were open more often! Sure, it's necessary to stand in line when the band is open, but now the stations heard are also worked as well. Using appropriate dimensions, there is no reason why a triband 10-15-20 meter quad could not be built using the same basic design. Such a structure would, however, require a stronger support and heavier rotator as well as several eager assistants during both construction and erection. As it stands, the dual-band quad can be handled by one man – just make sure you pick a calm day to do the antenna juggling. Since the climate here in south-central Texas is moderate year round, survival of this antenna under conditions of severe icing and high winds has not been tested. It could pose a problem, especially since PVC becomes increasingly brittle as the temperature drops. An obvious solution might be construction using larger diameter PVC and fittings. I can vouch for the sturdiness of 1/2-inch stock in two years of use surviving 65 mph winds and temperatures occasionally in the teens with no deterioration of strength. So, if the prospect of weatherproofing bamboo poles or fabricating a metal quad spider has kept you from experimenting with this popular and efficient antenna, follow these construction ideas and join the multitude of satisfied quad users. ■

Reference

[1] William Orr, ***All About Cubical Quads***, 2nd Edition, 1976.

CONTESTS

from page 15

If any contestant contacts stations on 2-way RTTY with all six continents and the BARTG Contest Manager receives contest logs from the operators in those six continents, a claim may be made for the WAC Award issued by the *RTTY Journal*. The necessary information will be sent on to the *RTTY Journal*, who will issue the WAC award free of charge.

DIPLOMA DES NATIONS FRANCOPHONES (DNF) AWARD RULES

The DNF award was created by the Reseau des Emetteurs Francais and issued by the F-DX-Club. Its purpose is to extend radio amateur activity with countries using French as their "official" language or in which French is the main dialect.

The DNF may be claimed by any licensed radio amateur who can submit proof of the required number of contacts, or to any SWL who can submit evidence of having heard the required number of stations. QSOs since January 1, 1960, are valid and any mode may have been used for the contacts.

Applications may be for only one band or mode or mixed bands/modes.

In the case of any dispute concerning the rules, the decision of the Award Manager will be final.

There are 2 parts for the DNF: Part 1 is to any amateur who can submit evidence of 30 2-way contacts with "Francophones" nations; Part 2, "Excellence," is to any claimant who can submit evidence of 45 2-way contacts with "Francophones" nations in 6 continents.

Same rules apply for SWL applications. For VHF, Part 1 is issued for 4 contacts and Part 2 is issued for 5 contacts. The continents counted for the purposes of this award are: Asia, Africa, Europe, Oceania, North America, South America, and Antarctica. It is not necessary to send QSLs with application. A list certified by 2 other licensed amateurs is sufficient. Each application must clearly indicate the name, call, address, and mode or band. The list of QSLs must show the nation and continent. The fee is 12 IRCs. Send applications and fee to: Monsieur Rene Duret F9TE, Villa La Vergnade, 15190 Condat en Feniers, France.

List of "Francophones" nations: C3, CN8, DL5/DA, F, FB8W, FB8X, FB8Y, FB8Z, FC, FG7, FH8, FK8 (ea), FL8, FM7, FO8 (ea), FP8, FR7, FS7, FU8/YJ8, FW8, FY7, HB, HH, LX, OD5, ON, TJ, TN, TR, TT, TU, TY, TZ, VE2, VQ8, XT, XU, XW, 3A, 3V8, 5R8 (ea), 5T5, 5U7, 5V, 6W8, 7X, 9Q5, 9U5, 9X5, TL, OR4, 4U1, FQ8, D6, 3X.

REPEATER, WHERE ART THOU?

One of the reasons why there are still some errors in the *73 Repeater Atlas of the World* is that a few repeater owners don't bother to let us know what they are doing. Repeater users and clubs are requested to send in lists of all area repeaters with the location (town) of the repeater, call, and frequencies. It's fun to find all of the repeaters in your area . . . the next step is to send in your list for us to coordinate with our computer.

You can make amateur radio more enjoyable for visiting hams by getting all of your repeaters on our list. The *73 Atlas* is by far the most complete listing of repeaters available . . . let's try to make it as perfect as possible.

Send repeater lists and info to: *73 Magazine*, Repeater Atlas, Peterborough NH 03458.

RESULTS

RESULTS OF THE 1977 YLAP

Phone – YLRL		*CW – YLRL*	
K6KCI	11,943.75 points	VE7DTO	761.25 points
WA9TVM	11,433	YV5CKR	570
WA3HUP	11,316	W8YL	531.25

Corcoran Award – WA9TVM – combined 11,523 points
Hager Award – VE1AMB – combined 8178 points
HB9ARC – combined 5481 points

Non-YLRL Winners:

Phone		*CW*	
W1WS	10,809 points	W1GAI	440 points
WA6HEL	5,916		
G4GAJ	5,880		

Adam L. Keller K9SGZ/W9EF
354 Southwood
Michigan City IN 46360

Don't Miss the Excitement of QRP

—HW-8 mods let you have a ball

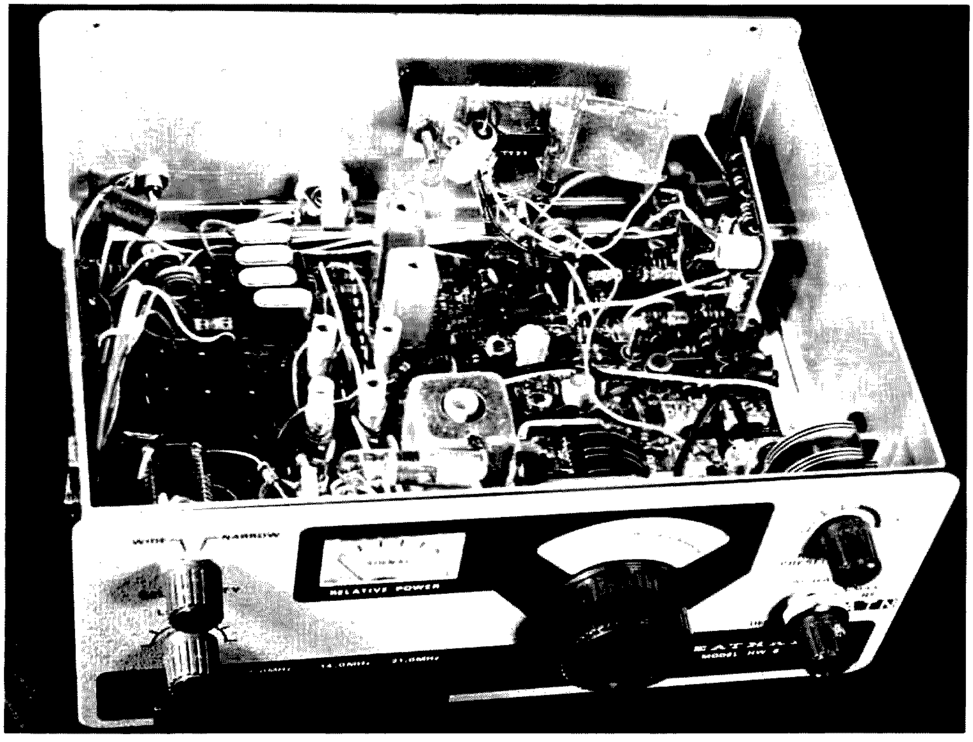

Photo A. Top view. The metal fin on the af IC is a piece of galvanized sheet metal soldered to the heat sink tab on the IC for a heat sink. The switch shown in Fig. 1 was not in place when the photo was taken.

I'd like to tell you about some changes I have made to my little QRP kW, the Heath HW-8. It seems that lots of people are deciding that it doesn't take a QRO kW to get across the big pond any more, and I am one of them. Having fond memories of a little 100 mW rig on 80 meters that I had back in 1962, I recently decided to try some QRP operation again. The HW-8 seemed to fit the bill, so Heath took some of my green stamps, and I took delivery of a very fine little CW transceiver. Nine construction hours later, there I was, banging away on 40 meters, when it became apparent that the little rig needed some things that it didn't have if I was ever to get across the pond again. So off went the 12-volt power supply, out came the old soldering iron and schematic, and on went the thinking cap.

First of all, I like to hear those CW signals ringing out of a good-sized speaker (when the XYL and harmonics are away from home) rather than on phones. The HW-8 has headphone audio only, so, after looking around for some way to get a speaker hooked up, I decided that it was maybe time to try one of those newfangled integrated circuits. After a short trip to the parts store, I came home with something by Sylvania called an ECG717 af output IC. The man there said that it will drive a speaker as long as I keep it at at least 8 Ohms or more. Since that seemed reasonable, I decided to give it a try. (See Fig. 1.)

After haywiring it together and using a time-honored cut-and-try method of resistor selection, lo and behold, the thing really worked! I then cleaned up the mess of haywire and mounted the whole thing on the back panel. An SPDT phone jack was mounted near the board, and a sort of dummy-load resistor was added to keep some load on the chip when the speaker was unplugged

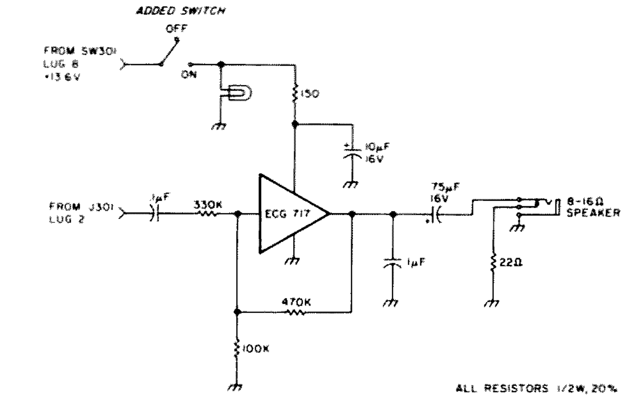

Fig. 1. Audio output stage.

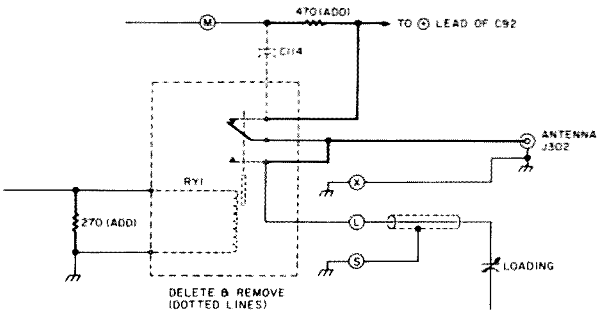

Fig. 2. Relay circuit modifications. Parts shown in heavy lines are to be added after removing the relay.

(see photos).

At this point, several beers went by the board, and some good stateside DX was worked on 40 meters. In fact, I made coast-to-coast the first evening with the little peanut whistle. More beers and congratulations were in order, until I realized that the one thing that I really missed was QSK (full break-in). The Apache-75A1 combination worked well — why not this little thing? After all, an old-timer who remembers 872A rectifiers should be able to do a simple thing like make the HW-8 switch from transmit to receive faster!

Well, back off went the 12 volts, out came the schematic and soldering iron again, and the neat little HW-8 got its first real taste of a determined home brewer in action. First of all, it was apparent that, no matter what else happened, the mechanical relay would have to go, or the noise would drive me batty. Also, there should be an easier way to switch the antenna than that thing. So, for starters, I removed the relay and threw it in the junk box. Also, I removed the short piece of yellow wire connecting the relay to the output coax connector and threw the wire in the junk box next to the relay. Now that the antenna no longer had any connection, it had to be hooked somewhere. I found the PC pad on the relay socket which is connected to hole "L" on the PC board, and connected a wire from that pad to the center conductor of the antenna coax connector. That connected the antenna permanently to the transmitter portion of the transceiver. I added a 270-Ohm 1/2-Watt resistor to ground from the relay pad connected to hole "J." This replaced the relay coil.

I seemed to recall a scheme of coupling used on an old rig of mine, using a small value of coupling capacitor right off the plate of the output tube, going to a high-impedance point in the rf stage in the receiver. Since this rig uses an FET as the rf stage, the input tuned circuits to the FET should be fairly high impedance. I wondered about finding a high-impedance point in the transmitter matching network and coupling right to the input tuned circuits. I decided to try 80m first, since the lower frequencies are normally easier to goof with. After several values and points were tried, it seemed to work the best by connecting an 8.2 pF disc capacitor from the junction of C95 and L26 over to terminal 4 on input coil L1. (See Figs. 3 and 4 and Photo B.) When sensitivity was measured, I found it to be essentially the same as before the modification. When I tried the transmitter, it also loaded up the same as before, and the power output was the same as before modification. Adding a couple of 1N914 diodes from the gate of Q1 to ground should protect the FET from stray rf. I placed these on the bottom side of the PC board.

Using the same technique, 40 meters (8.2 pF from junction of C99 and L28 to terminal 4 of input coil L2) and 20 meters (5.5 pF from junction of C103 and L31 to terminal 4 of input coil L3) were

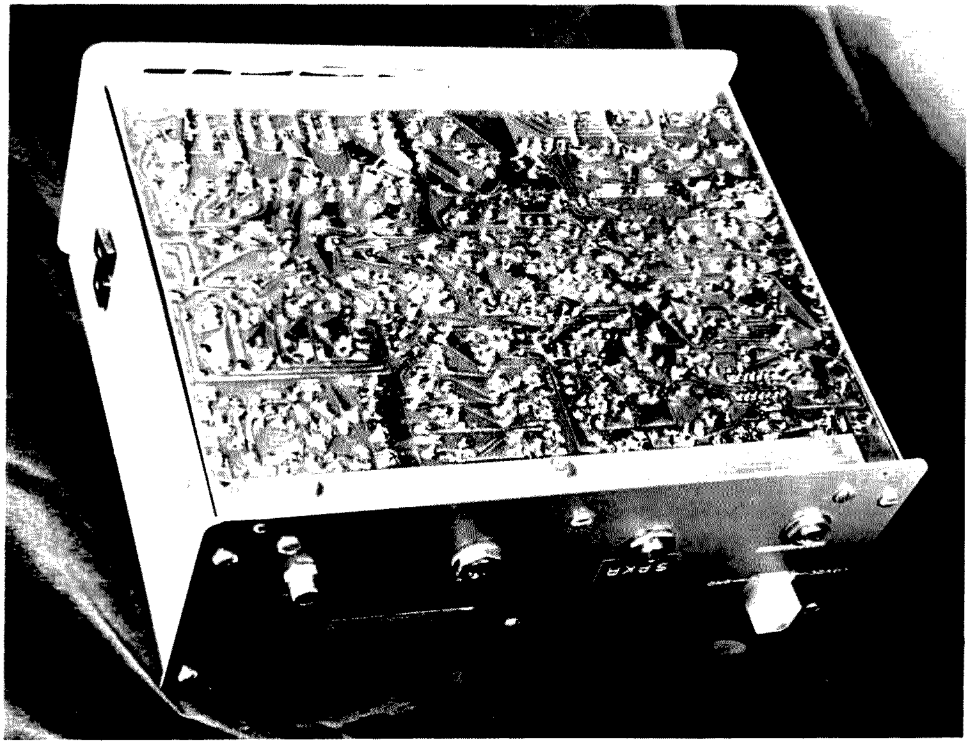

Photo B. Bottom view. Note the placement of four coupling capacitors and the placement of C13. The diodes added to the rf stage are mounted next to C13 on the bottom of the PC board.

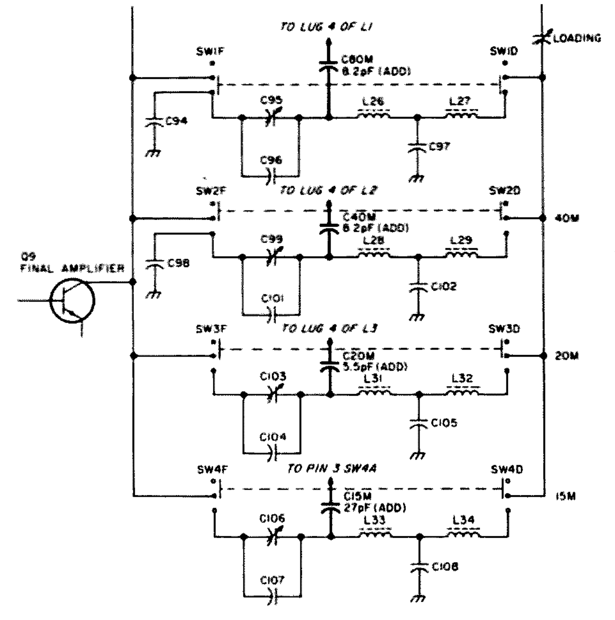

Fig. 3. Modifications to rf output stage. Components shown in heavy lines are added.

modified.

All was well, until I tried this technique on 15 meters. No matter what value of coupling capacitor I tried, the loading control would not peak at the same point on transmit as it did on receive. In fact, if the transmitter was tuned up for normal operation, the receiver sensitivity was degraded by 15 to 20 dB. This was definitely not a desired condition, so another method was arrived at for 15 meters. By connecting a 27 pF capacitor from the junction of C106 and L33 to the primary of input coil L4 (via terminal 3 of switch SW4A), the transmitter and receiver peak on the same setting of the loading control, and the receiver sensitivity is essentially the same as before modification.

It is advisable, at this point, to repeat the entire alignment procedure in the manual. The transmitter power output should be the same as before modification, also. A small instability on the 15m receiver was cured at this point by adding a 50 uF 6-volt capacitor in parallel with C13. I put C13 on the underside of the board and the 50 uF unit in C13's old holes, (+) lead to the source. By this time, I was feeling pretty good. The next task of speeding up the transmit to receive switchover looked like it would be duck soup.

The manual says that the delay time from transmit to receive is determined by the value of C92, which is 10 uF in the factory version. I wanted it to be really fast, so, I decided, why not take out the capacitor completely? To make a long story short, I soon found out that it needed *some* capacity there to prevent the clicks reported to me by W9EIU in Sister Lakes, Wisconsin.

A value of 0.47 uF for C92 was arrived at after some more cut and try, and that seemed to eliminate the clicks. The recovery time of the audio was still quite long, however, and I finally traced that to the time constant of R27 and C39. Reducing the value of R27 from 1 megohm down to 270k Ohms caused the audio to recover slightly later than the rest of the switching that takes place, making for almost "pop-free" audio. The sidetone is still used in this scheme, so that good feature is retained.

Another problem became apparent, once the rig was fired up on 40 meters in the evening. When the relay was removed, it killed the action of the rf gain control. An rf gain control is a must on 40 meters, so one had to be added. Since there was already an rf gain control on the front panel, it was merely a task of figuring out how to use it. First, the coax cable which goes from the rf gain control over to pins 2 and 4 of SW4A was removed at the SW4A end *only* and pulled out of the tie-wrap. Also, at this time, all of the yellow jumper wires connecting the #2 pins of SW1A, SW2A, SW3A, and SW4A were removed and discarded.

Now that the cable was loose, I had to decide what to do with it. First, I lifted the ground end of R6, the Q1 source resistor, out of the board. Then I connected this free end to the center conductor of the coax from the rf gain control. I connected the ground braid of this coax to the hole that R6 was removed from. This added the resistance of the rf gain control to the source of Q1. As this, by itself, was not enough additional biasing for Q1, some positive voltage was added. This was done by removing capacitor C114 (next to the old antenna relay) and replacing it with a 470-Ohm 1/2-Watt resistor. One end of this resistor was connected, via the PC board, to one of the PC pads of the old relay. I ran an insulated wire from this PC pad over to the + end of C92. This put 12 volts across the combination of the new 470-Ohm resistor and the rf gain control. The rf gain control worked. True, it worked backwards, but it worked! Interchanging the two outside leads on the rf gain control made the control work in the right direction. Be sure to move the ground of the volume control along with the ground of the rf gain

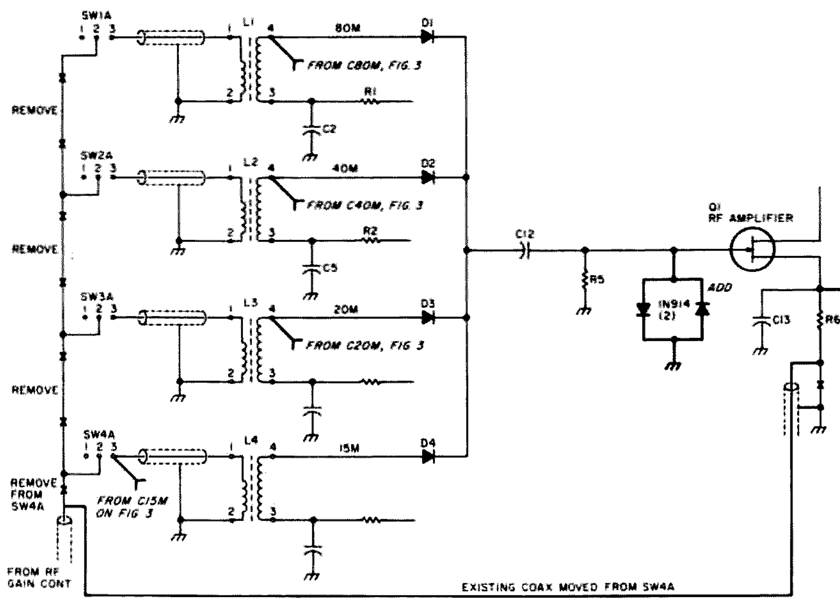

Fig. 4. Receiver rf stage modifications (shown in heavy lines).

control, or the volume control will be inoperative. In my case, that seemed like a lot of extra work, so I just relabeled the front panel to read "rf attenuation" instead of "rf gain."

Another problem which popped up after some on-the-air time was the fact that the vfo shift during transmit was too great with the 6 pF capacitor furnished with the kit for C55. I changed that capacitor to 3.3 pF, and found that the shift was just about right for the majority of other ops.

One last refinement was added – a dial light on the "relative power" meter. (See Photo A.) I like lights to tell me when something is turned on. To keep the low current drain for battery operation, I added a small toggle switch to the rear panel to switch off the 12 volts to the light and the af output IC. (See Fig. 1.) This allows minimum current drain for battery operation, even though headphones must be used.

The QSK is really not quite full QSK, since you cannot hear between dots. Any slight pause, though, however small, will cause the receiver to be active, and the QSK is just as good as my old Apache-75A1 combination ever was, due to the receiver overload on the A1.

After completing these mods on a Saturday morning, I worked G4, VP2, DJ6, EA6, and ON5 on that Saturday and the following Sunday afternoon. These contacts were made on 20 meters through the kWs and no more-satisfying contacts were ever made by this station!

I heartily endorse QRP operation as the answer to the bored amateur who is tired of the same old thing. It is great sport to "dig" the big guns about how much air conditioning must be required to cool off the shack with all those big old bottles glowing. You should really try QRP sometime. ■

Corrections

In reference to my article, "How Do You Use ICs? – part VIII," *73*, December, 1977: I have received a letter from Jim Willis WA4CCA pointing out what may be a serious design mistake in my article concerning LEDs used with TTL LCs.

For convenience, I had the LED indicators hooked to ground (Fig. 1). This appears to be poor practice and may, as I said, damage some TTL ICs. His letter pointed out that connection to the voltage source was far better – and safer for the devices.

The basic problem is contained in the statement that TTL logic is designed to sink current, not to source it. This really does not tell it right. When hooked up as in Fig. 1, the LED draws its current from the 7400 (or other 7400 series IC). Thus this IC must supply (source) the current for the LED. Hooked up the other way, as in Fig. 2, the current is supplied by the Vcc source and is merely handled by the IC. The device can dissipate (sink) the current without problem. The TTL's problem is that it has rather husky transistors to dissipate, or sink, the current, but its other transistors are not built to supply or source that much current.

Once that is explained, it goes a long way toward explaining why, even though the specs call for so much current, some ICs got blown when tied to the LEDs. They just couldn't take the current demand.

This also put me on the track of another error that got in. I said that with my hookup, the LED was lit when the output was high. This is not correct. The only time the 16 mA IC current was available was when it was in a low state. If the switching rate is slow enough (as it was with my test circuit), it can be checked with a voltmeter. My meter showed clearly when the IC changed state. With my hookup, the meter went high as the LED went off and low as the LED lit. Thus the LED was the reverse of the logic state of the IC.

So there are other advantages to the Vcc hookup besides safety. Using the Fig. 2 hookup, the logic state and the LED are in phase. The LED is lit when high and off when low. That's as it should be. This also appears to be the correct LED hookup for the other TTL ICs shown, and should allow for more of the outputs than the one I chose to be displayed without damage.

There is another consideration. When using the Fig. 1 hookup, the current is rather marginal. The IC is straining. Not so with Fig. 2.

This affects the output voltage swing of the IC, too. When you drag down the IC input with a current load, you also drag down the output voltage. The voltage measured on the high output, even though the LED was off, was not as high a peak on the meter as the Fig. 2 hookup was.

While a dc meter may not be the last word at measuring a peak square wave voltage, it still means there is not as much voltage available at the output. This does not matter so much when the termination is just an LED indicator, but if you are also driving another IC at the same time, you may not have enough actual high voltage to reliably key the IC. If you are riding at a marginal point on the IC's ability to switch at that voltage, you may have all sorts of erratic switching operation. There is only a slight difference in the hookup – not enough to be really confusing – so go for the best.

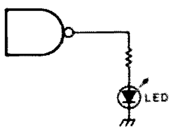

Fig. 1. Incorrect way to connect LED to TTL IC (may damage IC).

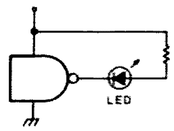

Fig. 2. Correct way to connect LED to TTL IC.

While it has been a long time since I did the article and all is not clear about what I did at the time, I do not see any reason why this change will seriously affect the material in the article. Some of the specific phase or polarity info will be off, but your meter will show you what is what. The circuit's operation will still be visually apparent, and that was the basic purpose of the article.

To restate the corrective action as a simple pragmatic rule, LED output indicators should be connected in the correct polarity between the desired TTL output pin and the Vcc pin or voltage source.

Don't forget the series dropping resistor. Without it you can blow the diode and the IC.

I would like to thank Mr. Willis for his letter pinpointing the error and the specific technology behind it – now we have one more safety rule to keep our ICs healthy and perking away like they should. I hope my error has not caused trouble for readers trying the circuits.

Alexander MacLean
WA2SUT/NNNØZVB
Denville NJ

In addition to an address change, please note a few corrections to Fig. 3 of my article, "Clean Up Your Touch-tone™ Act," which appeared in your February issue. "TO SOLID STATE SW. Q2" should read "TO SOLID STATE SW. Q1". "AUDIO IN" should be "AUDIO IN FROM PAD". Also, the +12 V line should be +13 V.

E. Doren WA6THG/KH6GSA
58 Manaolana Place
Hilo HI 96720

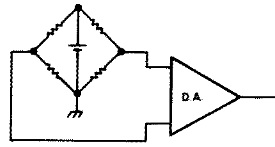

Revised Fig. 9: "The Op Amp Encyclopedia – part II."

In part II of my article, "The Op Amp Encyclopedia" (February, 1978), the Wheatstone bridge in Fig. 9 is incorrectly drawn. It should be shown as in the accompanying Revised Fig. 9.

Joseph J. Carr K4IPV
Arlington VA

Several small errors managed to creep into my article in your January, 1978, issue ("Tune Your Tower To 80/160"). First, the tubing was joined as shown in Fig. 2, not as in Fig. 1, as stated on page 119. Also, 3/4-inch PVC materials are used in Fig. 3 – not ½-inch as shown. Finally, the radials are not buried 2 to 4 feet underground, as stated on page 120, but 2 to 4 *inches* underground.

Evan P. Rolek K9SQG/8
Dayton OH

Ham Help

Does anyone have any information on how to use the Model 33 as a "stupid" teleprinter? It should include TU and some memory, as my typing speed exceeds 60 wpm.

Nico de Jong OZ1BMC
Halls Alle 9
1802 Kobenhavn V
Denmark

I need information on a model 77 signal generator, date of manufacture unknown, but with data plate marked "Wireless Egert Engineering, Inc., New York City; type No. 99, S/N 350." It appears to have been self-contained (battery-powered), with two pair of pin-jacks on the front for audio frequency output and radio frequency output; range switch (rotary) marked 1 through 7; pot marked "microvolts"; with off position, plus markings 80/150/300/600/1200/2500/5m/10m/20m/40m/80m.

John W. Asherbranner
6101 E. 147th St.
Grandview MO 64030
(816)-331-2590

Is Your Repeater Up-To-Date?

—several ways to modernize your repeater

E. E. Buffington W4VGZ
2736 Woodbury Dr.
Burlington NC 27215

The April and June, 1977, issues of *73 Magazine* had articles of mine concerning autopatch and building a repeater. I was not satisfied with the design in a couple of places, so this article will clear up some of the problem areas that have developed.

The Touchtone™ Control Circuit

The circuit suggested in the April issue and given without a PC board layout is presented here with a few changes.

I found that (*) on the phone line would trigger a disconnect on phone com-

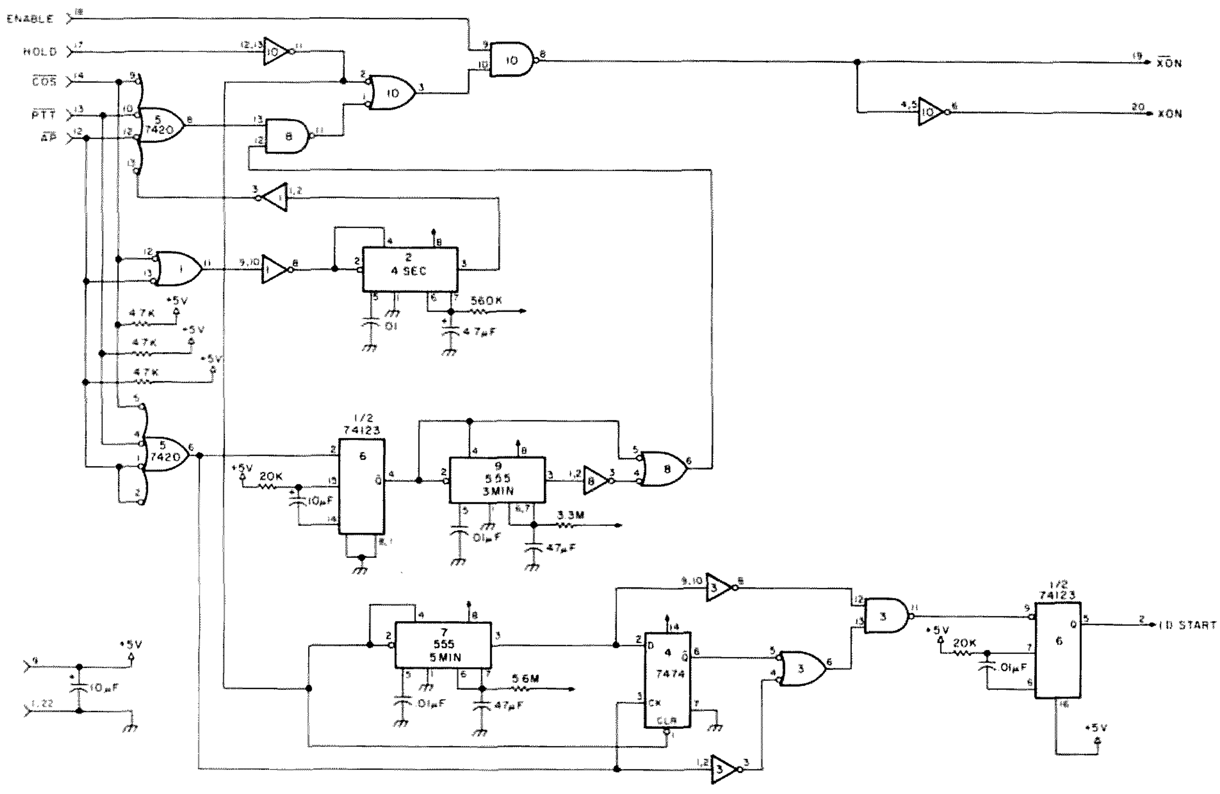

Fig. 1. Timer. This circuit boasts resettable timers and improved identifier control.

pany equipment, so the logic was implemented to connect to the phone line after the (*) button was released. This change and other circuit simplifications were made in my final version.

The operation of the circuit is as follows:

Depressing the (*) button causes the (*), (R4), and (C1) inputs to be low. IC4, pin 9 will be low before the row-column match is sensed (as a high level at IC4, pin 10), due to the 1.5-millisecond debouncer delay. This means that (*) or (#) will not be recognized as digits. After depressing (*) for a time greater than one second, IC6-8 will go low, starting the 3-minute timer and clearing the J-K flip-flop IC7. If the first digit is a (1) or (Ø), the 3-minute timer will be reset, and the phone will disconnect. If the first digit is not a (1) or (Ø), then a row-column match will clock the J-K flip-flop, causing IC7-13 to go low and remain low during subsequent digits.

The old circuit had some drawbacks. The timers would not reset 100%, and too many IDs could be generated.

This new timer circuit has overcome both these drawbacks. The timers reset 100%, and the ID comes on at the beginning and IDs 5 minutes later (with no IDs closer than 5 minutes). This new board will not plug into the same socket as the old board. I tried, but the number of jumpers required to do this was ridiculous.

The operation of the 4-second "tail" timer and the 3-minute "timeout" timer are pretty straightforward. The single-shot 74123 is used to generate a reset pulse for the 3-minute timer, and, while the 3-minute timer is being reset, the single-shot pulse is fed forward to keep the transmitter enabled.

The operation of the ID logic is not so easy to explain in a step-by-step fashion. First, note that the 5-minute timer is triggered by the ID hold command, which also clears the type D flip-flop ($\bar{Q}$

Parts List

Touchtone control	
1	7420
5	7400
1	74121
1	74123
1	74123
1	555
1	7473
3	.1 uF 10 V disc ceramic
3	47 uF 10 V tantalum
1	1 uF 10 V tantalum
1	.01 uF disc ceramic
2	33k ¼ W
1	2.2k ¼ W
1	2N3904
1	relay C. P. Claire MR3MF 1008
1	220 ¼ W
1	3 meg ¼ W
1	1N4001
1	10 uF 10 V dipped tantalum
New timer	
4	7400
3	555
1	7474
1	7420
1	74123
3	4.7k ¼ W
1	3.3 meg ¼ W
2	20k ¼ W
1	5.6 meg ¼ W
1	560k ¼ W
4	.01 uF disc ceramic
2	10 uF 10 V dipped tantalum
1	4.7 uF 10 V tantalum
2	47 uF 10 V tantalum

Circuit boards and parts can be obtained from Stafford Electronics, 427 South Benbow Road, Greensboro NC 27401, (919) 274-9917.

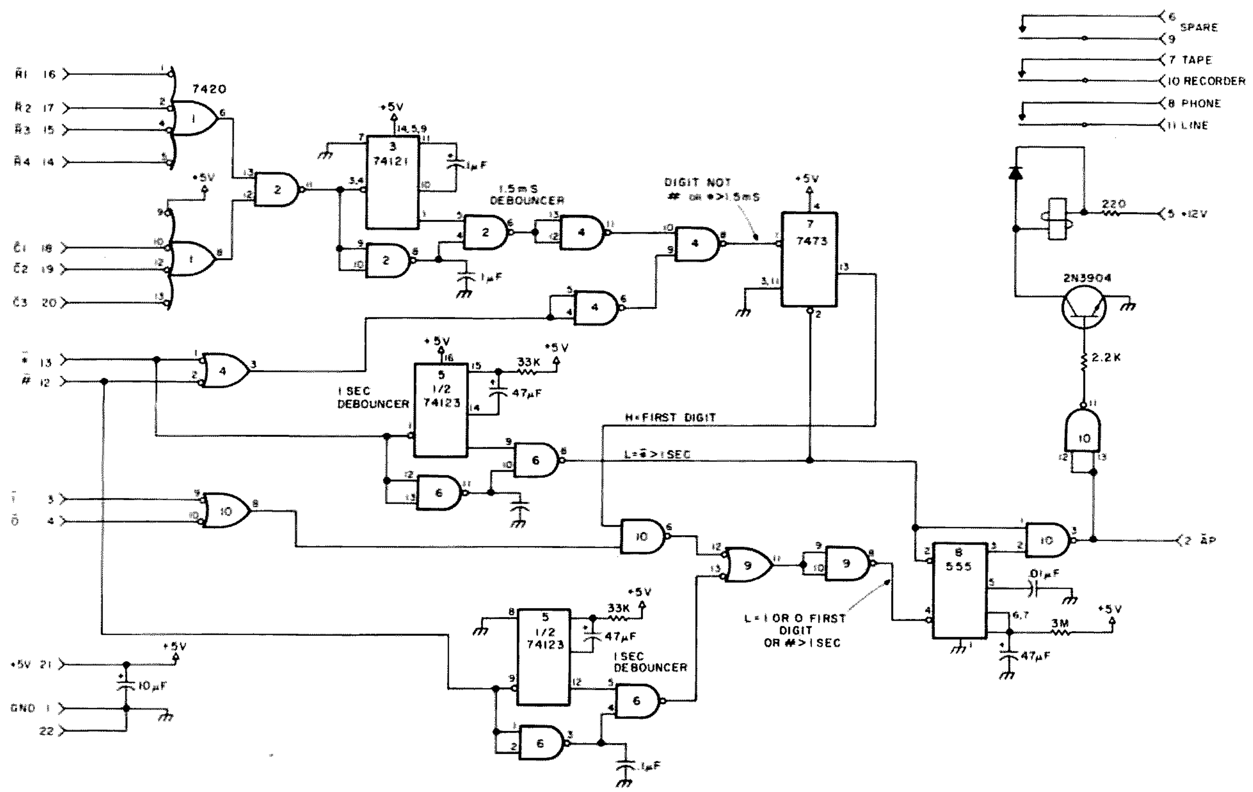

Fig. 2. Touchtone control. Single digit access and disconnect with lockout of toll calls.

= H). Now, if at any time during this 5-minute period the transmitter is commanded on ($\overline{\text{COS}}$, $\overline{\text{PTT}}$, or $\overline{\text{AP}}$ going low), the D flip-flop will clock data at IC4, pin 2 inverted to the output pin 6. Now, whenever the 5-minute timer runs down, an ID will be generated. Conversely, if no command for transmitter on was made during the rundown of the 5-minute timer, then no ID would be generated.

Some had trouble with the repeater control (shutdown) board. One complaint was that dial pulses were detected by the ring detector. The cure for that is to put a .1 uF capacitor across the neon and increase the series resistor to 100k Ohms or so.

Another problem was that the fourth column touchtone signaling would not clock the J-K flip-flop. The clock input would not go low enough. This condition was fixed by a 4.7k Ohm resistor connected from ground to the clock

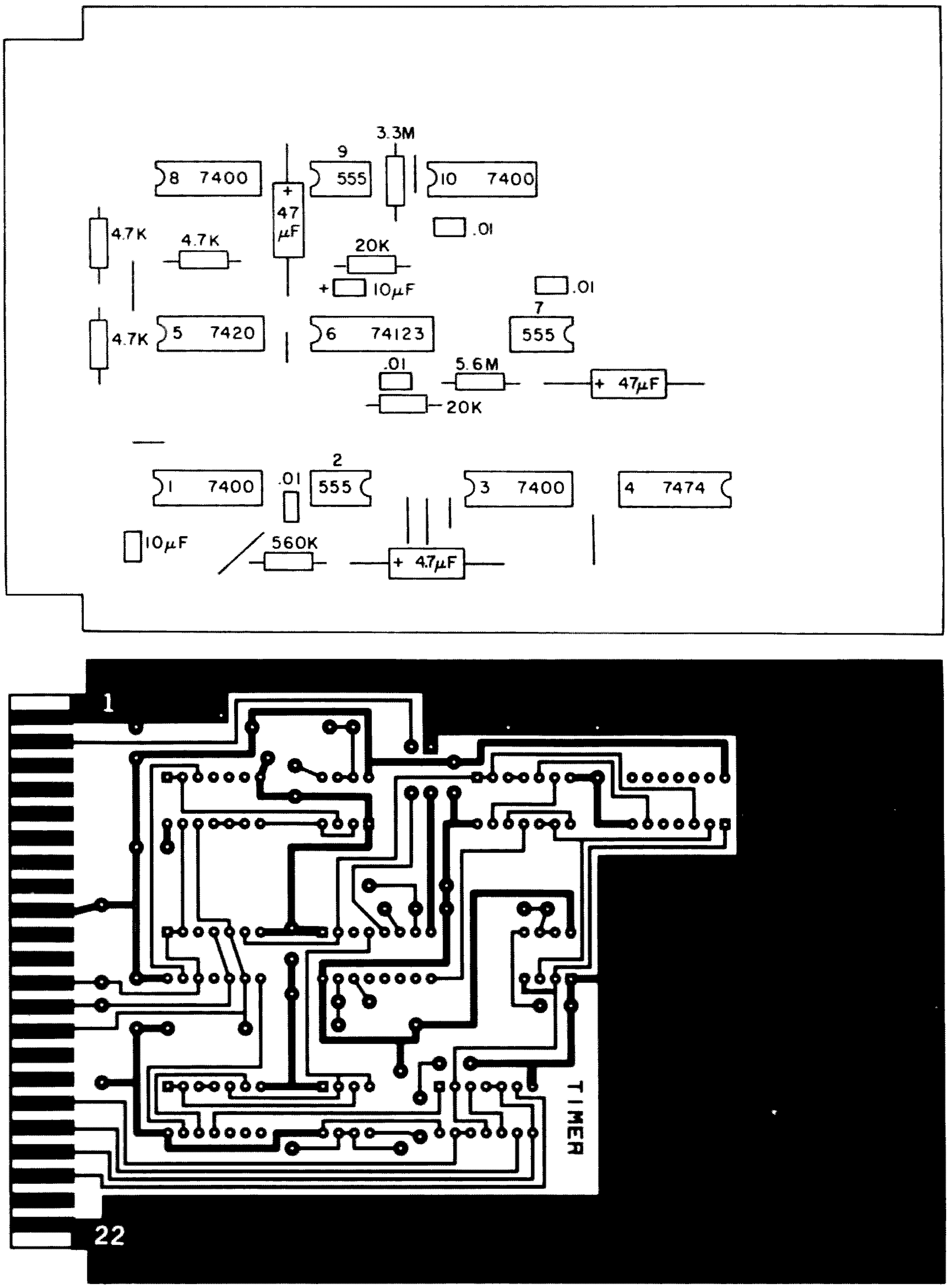

Fig. 3. Timer PC board.

input (collector of Q1) to pull down the quiescent voltage to slightly less than 3 volts. Others reported their ring had a shorter interval than I found locally. Changing the 47 uF to 22 or 10 uF will fix that.

Others reported phone line loop current of 60 mA, instead of the 20 mA I found on the few lines that I checked. This will weld the contacts of all but the most hardy of reed relays. I recommend dc isolation of the coupler, if this is a problem. Fig. 5 shows isolation with a 2 to 4 uF nonpolarized capacitor and a resistor as the dc load for the phone line. This resistor should be adjusted for 20 mA of loop current.

Some have reported that they need more or less gain from the audio board. The audio board was designed for 20 dB gain from the receiver to the transmitter. You can change the feedback resistor on the op amp to do this, as the stage gain varies directly

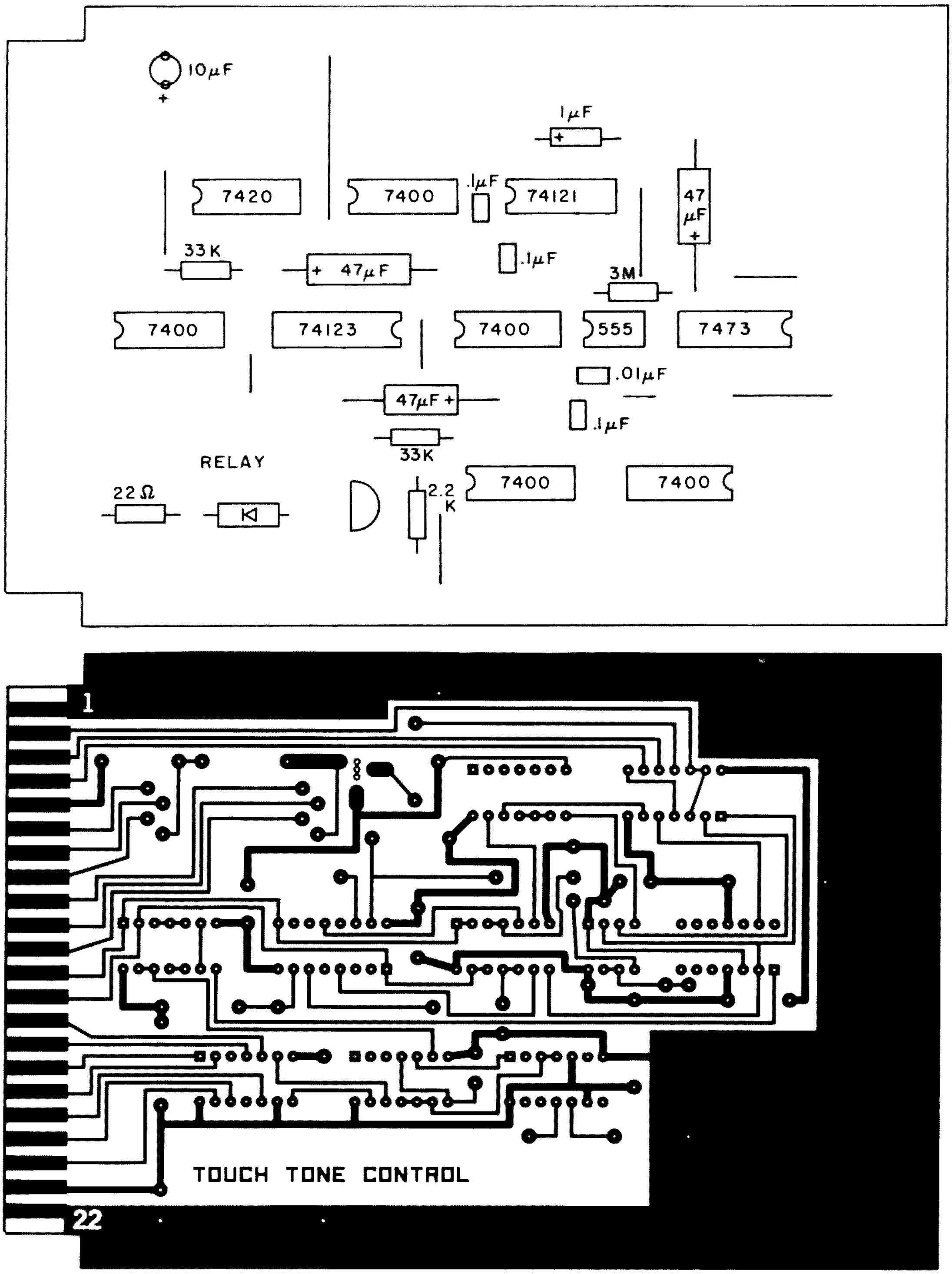

Fig. 4. Touchtone control PC board.

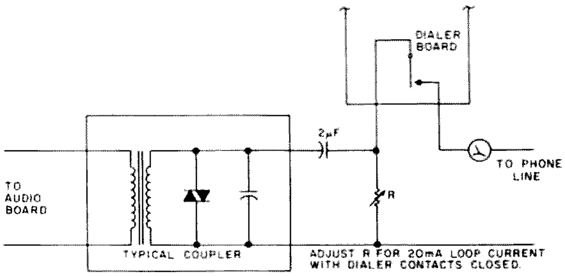

Fig. 5. Dc isolation and reduction of loop current.

with this resistor. For a gain reduction of half the present gain, you should reduce the feedback resistor to half its present value.

There are two 220 MHz repeaters in this area that have been built using this system of circuits. These fellows have taken Clegg FM-76 rigs and removed and remounted the transmitter and receiver boards in separate boxes. After interfacing with this system of circuits, they have a very fine repeater. The ease with which this can be done is just fantastic!

Future Goodies

A three- or four-tone sequential control system is high on the priority list. With this you could key a recorded message for new repeater users. You could select preset squelch (COS) threshold levels for those times when the band is open. You could switch a 6 dB pad in the receiver for those repeaters that are troubled by intermod from time to time. You could set up links with other repeaters to increase your range. Okay, there's the next project — a sequential tone decoder. ■

Bill Hoisington K1CLL
c/o 73 Magazine

1220 MHz — Use It Or Lose It!

—simple gear you can build and enjoy

This article, for the genuine amateur radio and electronics experimenter, details the construction of a crystal-controlled exciter, an oscillator, a tuned diode detector, and an eleven-element beam covering the amateur band of 1215 to 1300 MHz. In these days of "store-bought" rigs on lower frequencies, there is a particular fascination in working with circuits which cannot be found down on "Radio Row."

This particular amateur band is about the last one, going up in frequency, on which a Yagi beam is still useful. At 2400 MHz, almost any kind of a dish is better, but, here on 1220, long Yagis will still give plenty of gain — like close to 20 dB. And, look at the low cost! A piece of PVC tubing, a chunk of no. 12 bare copper wire cut into little pieces, some Elmer's glue, and you've got it.

Of course, finding the lengths and spacings of each one of those elements is very important, but I've already done that part for you.

The tuned circuit itself, for 1220 MHz, can be made out of copperclad and brass sheet, although spring copper or beryllium copper make better sliding contact springs, of course.

First there's the ¼-wave open-ended circuit. I have made some of these operate on 1220, but you're right on the end of nothing as far as a decent tuned circuit goes. Fig. 1 shows a tuned diode detector dircuit which is good up to about 800 MHz. Actually, this one is about all through at 1000 MHz, so don't try to use it for 1220 unless you want to just play around.

Then there's the ½-wave "double-short" circuit. This one, shown in Fig. 3(a), works fine on 1220. I've even used it right up to and including X-band (10,000 MHz), although there it really needs a ¼-inch i.d. cavity with a one-eighth-inch center conductor, but that's another story.

As in Fig. 3(a), the ever-useful copperclad forms the baseboard, with another piece one inch wide for L1 fastened down at both ends with insulation. I made the sliding shorts out of brass sheet, although spring copper is better. It is also supposed to work better if silver-plated (and, of course, it will, at least a little). I have not

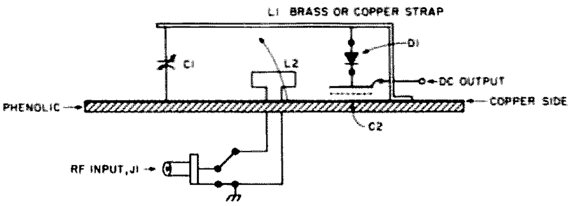

Fig. 1. ¼-wave circuit. Do not use above 800 MHz.

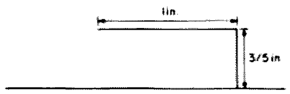

Fig. 2(a).

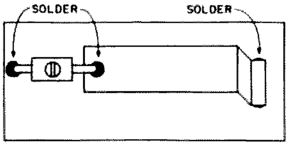

Fig. 2(b).

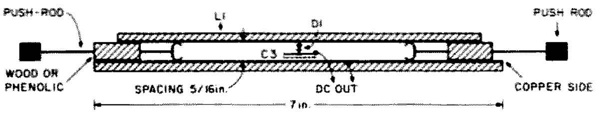

Fig. 3(a). Completed diode detector. Tunes 1000 to 1400 MHz. C3 — see Fig. 3(b).

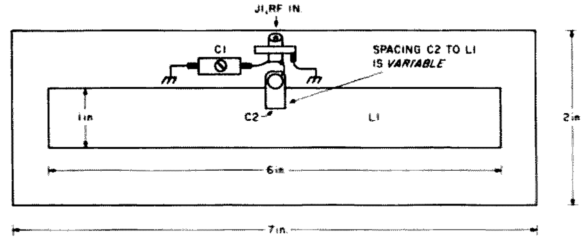

Fig. 3(b). Top view. C2 is variable (about ½ pF). J1 is a phono jack. C3 is 1 inch square, insulated from baseboard. Use nylon bolt to hold C3 to base.

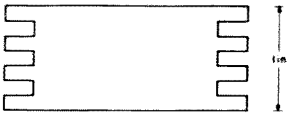

Fig. 4. Sliding shorts.

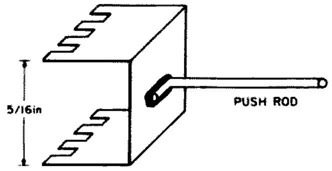

Fig. 5(a).

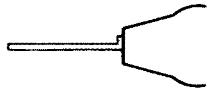

Fig. 5(b). Bending detail of shorts.

silver-plated mine yet. Just be sure to make the brass shine.

You will have to put a little effort into making the sliders, as shown in Fig. 4. I was doubtful at first about making them myself, but, after the first few you make, it's not so hard. They do work, if you handle them with care. In Fig. 3(a) I show handles on the push rods, but if you leave these off or make them readily detachable, you can take the sliders out quite easily and adjust them for a good fit, taking care to make the pressure on each finger as nearly equal as you can.

Fig. 4 shows the flat cut, with the fingers, before bending. Fig. 5(a) shows the finished shape, after bending, with push rod soldered in place. Fig. 5(b) shows details of the contacting surfaces bent for best contact operation.

Now that you have a tuned diode detector, you need something to detect, and the oscillator of Fig. 6 will give you just that, although you may wish to proceed directly to the crystal-controlled exciter. Figs. 6(b) and 6(c) give further details on the oscillator.

Good transistors begin to be a problem for 1220 MHz. I used the old standby 918, which must be at least ten years old by now. I found that tuning on 1220 is remarkably sharp as soon as you get things running at all well. An oscillator is a lot of fun and quite useful for certain purposes, such as tuning up beams (especially when followed by an amplifier for more power), isolation, and modulation. The crystal-controlled exciter is, of course, the unit to use for serious work on the air.

In order to make the multiplier tuning simpler and a sure thing, I decided to stick to doubling in the UHF and microwave stages. If you have had any experience with frequency multiplying at UHF and up into microwaves, you will be acquainted with the fact that the times-two harmonic (doubling) is always the most powerful.

You can start on 50.9 MHz, as in Fig. 7, triple to 152.7, double to 305.4, double to 610.8, and, finally, double to 1221.6 MHz in the amateur band. Note that tripling from 50 to 150 is not too hard, but from then on up, you should double only for the simplest and surest results. Of course, if you want to, using very high Q circuits and very careful attention to wavemeters, calibrated tuned detectors, and well-calibrated microwave receivers, you can do almost any amount of multiplying. For instance, I worked with a large company in New Hampshire in the late 1960s which was building X-band equipment for the ill-fated F-111 jet fighter. Someone had designed a little unit which was supposed to multiply by *ten*! At X-band! Needless to say, I advised elimination of that unit and came up with a Gunn diode oscillator on X-band. They had been using several X-band spectrum analyzers to find that elusive little tenth harmonic. So stick to doubling; you'll have fewer grey hairs!

You can start in this exciter with almost any good VHF transistor as the 50.9 MHz oscillator, using the well-tried and proven circuit of Fig. 7. Though tripling to 152.7 isn't too difficult, you will need to make up or borrow some VHF and UHF absorption wavemeters. Do not use a receiver to determine which harmonic you are on. Better are the tuned diode types shown in Fig. 1. They are also excellent for checking AM modulation with a small af amplifier and padded earphones, so you can hear your own modulation as it sounds on the air.

You will have enough to do getting a microwave rig and beams running for interesting DX tests without going to other than AM modulation, at least to start with, so be happy with it. It also works very well and gives you the same or better DX.

The doubler from 152.7 to 305.4 MHz is still easy enough, if you have some experience and frequency calibration available to help you. For the next doubler to 610.8 MHz, I had to use the old reliable 918, and, just to be sure of getting the doubling frequency harmonic on 610.8, I made up a lecher line quickie, as in Fig. 9. This one is really indispensable for checking frequencies over 1000 MHz. Couple J1 to the oscillator or stage under test with a short piece of RG-58/U cable, and observe peaks and/or dips as shown

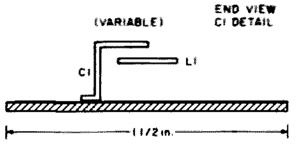

Fig. 6(c). Collector tap at ½" from end of L1.

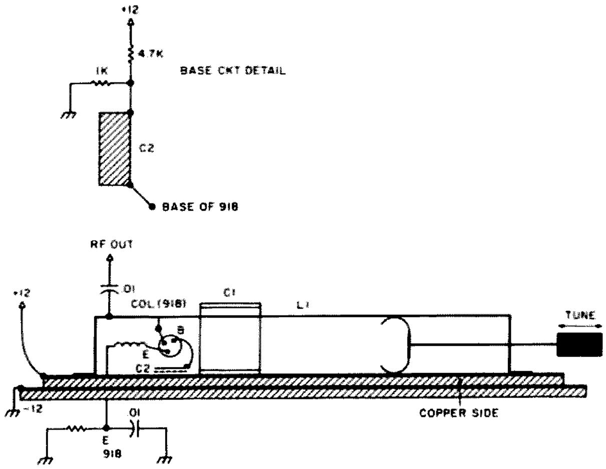

Fig. 6(a). Oscillator, 1220 MHz.

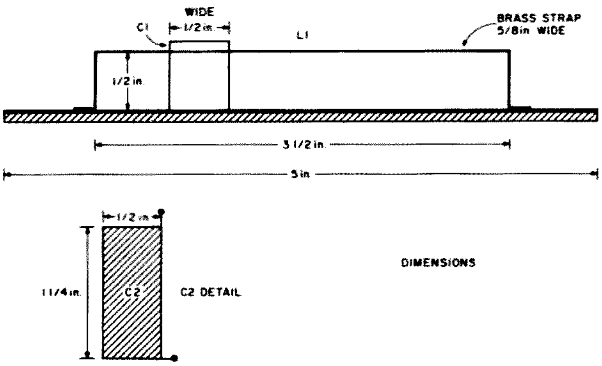

Fig. 6(b).

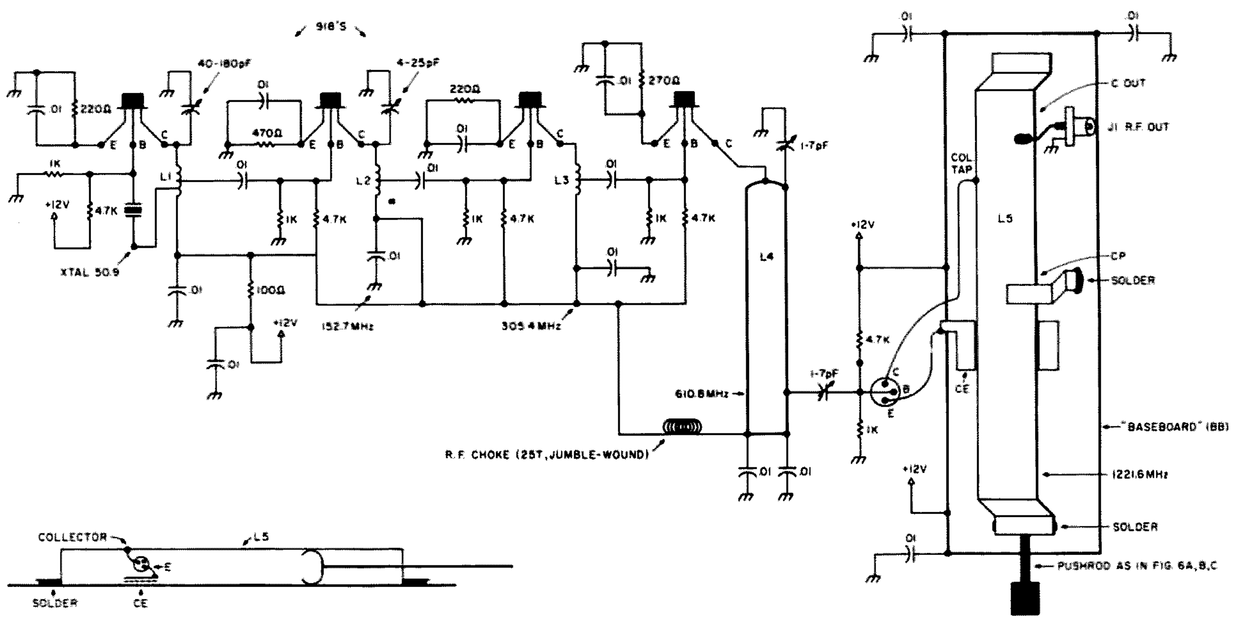

Fig. 7. Crystal exciter, 1220 MHz. Note that BB is connected to +12 V along with L5, as in Figs. 6(a), 6(b), and 6(c). (See lower left: L5 detail — 1220 doubler.) C out is placed 7/8" from end of L5 and is variable. The col. lead to L5 is only ¼" long. CE is also similar to the emitter cap of Figs. 6(a), 6(b), and 6(c). BB is 5½" long, 1½" wide, and insulated from ground. L1 = 4 turns no. 16 bare, ¾" long; tap at 1½ turns from cold end, 5/8 o.d. L2 = 4 turns, 7/16 o.d., output tap at ½ turn from cold end. L3 = 3 turns; tap at ½ turn. L4 = brass or copper strap, ½" wide, 1-7/8" long, output tap at ½" from cold end, spaced 3/8" from baseboard.

on the diode wavemeter. Fasten a ruler to the baseboard (be sure it has a centimeter scale), and, as you slide the short along the lecher line, take an average of several peaks. These peaks or dips are found at the half-wave points, so multiply by two for the wavelength. Easy-to-remember centimeter-to-MHz conversion points are 30 cm = 1000 MHz, 20 cm = 1500 MHz, 15 cm = 2000 MHz, and 10 cm = 3000 MHz.

I had to start using strapline circuitry here at 610.8 MHz, as shown in Fig. 7. Around 400 to 500 MHz is where you have to give up on coils. From then on up, shape begins to play an ever-increasing role in frequency determination.

The last stage of the exciter is where things get a little tricky if you are not used to half-wave double-short circuitry. However, once you get it running, you will find it tunes very sharply and provides you with good output on 1221 MHz. Note the small-value trimmers found between the base and ground of the last three doublers. These are quite important, as you will find, serving to match the base input impedance to the previous collector circuit, along with the tap-down on its inductance. There is also a parallel capacitor, CP, across L5, the 1200 MHz tuned circuit. This is the same as on the lower frequencies, only a great deal smaller. A certain amount of parallel C combined with the L gives the best Q for a given frequency. A few minutes of trial, varying the C against the length of L5, will show you that that principle still holds true even on 1220 MHz.

The collector connection is shown tapped down on L5, also as usual. Note also the use of +12 volts on the ground plane of L5. This method avoids the use of "zero inductance" capacitors at the ends of L5. Such capacitors do not exist in stores, although certain expensive coaxial types do attain quite low values of L in the "leads."

The emitter bypass, CE, uses the brass-plate method to achieve the desired low inductance for use at 1220 MHz. The oscillator, Figs. 6(a) and 6(b), shows more detail of this type of flat-plate cap. In those figures, it is labeled C2 and is used as the base bypass. Note that to make an oscillator, you "lift" the emitter off ground and ground the base (to rf, that is). To make an amplifier or doubler, you ground the emitter and use the off-ground base as the open input.

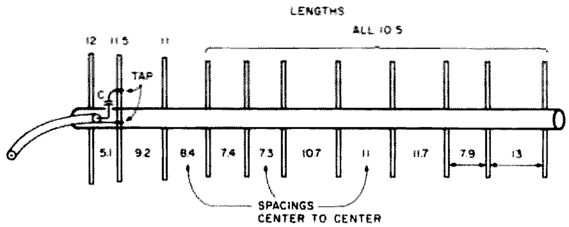

Fig. 8. 11-element beam, 1220 MHz. (All measurements are in cm.) Boom = PVC grey plastic tubing, 7/8 o.d. Elements = bare copper, no. 12. C = ½ to 1 pF. Tap, center to center = 19 mm. Spacing, C, and leads to element = approximately 2 mm. Elements fastened with push-fit and white glue.

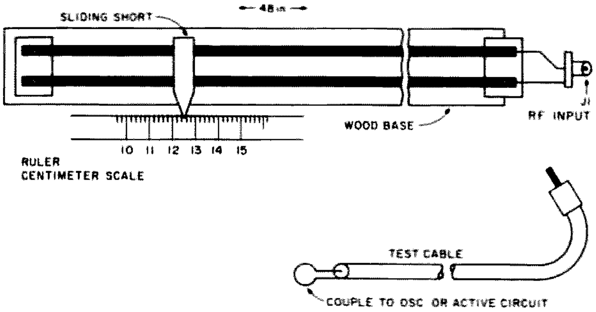

Fig. 9. Lecher line.

My usual method of tuning up a rig like this is to adjust each stage for maximum gain and output, making very sure of the frequency, before going to the next stage.

Low-Cost Yagi for 1220 MHz

The tune-up of a long Yagi for 1220 follows about the same procedure as on the lower frequencies, using a source (which in this case is the exciter of Fig. 7), a receiving beam, a tuned diode detector as in Fig. 3(a), a microammeter, and various tabletop beam-element-stand pieces of hardware (made out of wood this time). You won't need the latter, as I have already done this work for you. Just follow the dimensions given in Fig. 8, and it will work fine. The only item that may take a little experimenting with is the gamma match. The small-value C, the tap on the radiator, the spacing from the radiator of the leads, and the "dress" of the coax cable as it attaches to the radiator and the C are somewhat critical. Follow Fig. 8 as closely as you can, and experiment a little, and you should be okay. Just remember that most worthwhile things take a little time.

The beam itself, as shown in Fig. 8, is easy enough except for that gamma match.

Be sure to keep your eye on the receiver meter, with the receiving beam several feet away. When finished, mine worked across 10 feet of room, tabletop to tabletop, with the diode receiver. When a sensitive receiver is used, you can start hilltopping and get a first approximation of the range in kilometers for an "under 100-milliwatt" rig.

Then you can go on up from there, with more power, bigger beams, better receivers, and so forth, as your pocketbook and skill allow. ■

Arthur T. Roderick III WA4GIM
2023 Chancellor Ct.
Snellville GA 30278

New Protection For Your Car

—simple force field system

If you operate mobile, you face the problem of what to do to prevent the theft of your equipment. There is only one sure way to know that your rig will not be stolen – take it with you every time you leave your car. However, there will be times when this will be very inconvenient or impossible, and you will probably start leaving the rig in the car occasionally. To provide some protection when you do not take the rig out, you may consider an alarm system.

There have been a number of good articles on automotive alarm systems. It is not my intention to present another vehicle alarm system, but rather an idea for a device which is used with an alarm system to provide increased protection for what is inside your car. Since this device must be used with an alarm system, let's look briefly at the types of car alarm systems in common use.

There are two basic types of automobile alarm systems – those that require an external key switch to turn the system on and off and those that use some type of time delay with a switch hidden inside the car to turn the system on and off. The time-delay-type alarm is almost useless for protecting a radio in a car. The time required for a thief to steal a radio is so short that any delay in triggering the alarm cannot be tolerated.

Notice that, for either type of alarm, the goal is the same – to scare the thief away and to attract attention to the car. The alarm does nothing to prevent the thief from going ahead and stealing. The thief's fear of being caught is relied on for that.

What I wanted was an alarm system that would provide a physical deterrent to keep the thief from entering the car at all. I had not seen anything that would do this, except for a few contraptions that used high voltages and the like. I did not want to use anything like that because of the legal problems such devices can cause and because of the possible hazards they present.

I finally found a way to create an effective, yet relatively safe, "force field" that can provide the deterrent action I want. High-intensity sound is my force field. A very loud sound source located inside the car and activated by your alarm system can keep a thief from getting your rig. With the sound source inside the car, the power required to generate a sound level loud enough to cause the thief discomfort is relatively low, and the sound generator itself is protected by the high sound level.

Of course, this inside sound source is used in addition to my external noise makers. The inside source keeps the thief out of the car, while the outside siren calls attention to the vehicle.

There are several types of sound generators that can be used inside a car to produce the intense sound level desired. Perhaps the simplest

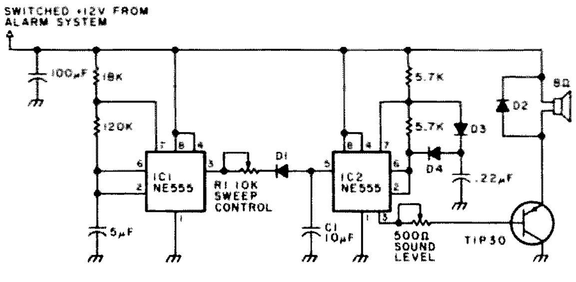

Fig. 1. Electronic siren. IC1 is the sweep generator, and IC2 is the audio frequency generator. All capacitors rated at 15 WV dc or more. D1, D3, and D4 are general-purpose silicon diodes. D2 is a silicon rectifier rated at 1 Amp, 50 piv or more.

source would be a good loud automobile horn. An old, but usable, automobile horn can be obtained from a junk yard quite reasonably. However, a horn of this type requires a lot of current, and that means running heavy wiring and using a heavy relay in the alarm system.

A mechanical siren is another possibility, but requires time to come up to full speed, can be jammed, and may not produce the most effective frequency.

The best sound generator for use inside the car is probably an electronic siren. These are available commercially for around $25, but a very effective siren can be built using two NE-555 integrated circuits and a PNP power transistor.

The circuit in Fig. 1 is a siren that I built. This circuit produces a square wave output that sweeps up and down in frequency, producing an effective deterrent sound. The operation of this circuit is straightforward. The first NE-555 timer (IC1) produces a very low-frequency rectangular output, which is shaped to a roughly triangular waveform by R1, D1, and C1. This signal modulates the audio frequency square wave oscillator formed by IC2 and associated components. Finally, the sweep frequency output from IC2 drives the base of a PNP power-switching transistor through a current-limiting potentiometer. The emitter circuit of the transistor has the speaker going to the positive supply with a flyback diode across the speaker. Don't be afraid to play with this circuit; in fact, I recommend it.

For best results, the circuit should be adjusted while in your car to produce the most effective sound. For testing at low volume, just omit the power transistor and connect the free speaker lead to the 500-Ohm pot.

If you live in a state that prohibits the sweep-frequency-type siren alarm on vehicles, the circuit in Fig. 1 can be converted to produce a two-tone (high/low) sound. All you have to do is remove C1. While I do not think this is quite as effective as the sweep sound, it is far better than nothing.

The most expensive part of the home-built siren is the horn speaker. You can sometimes find these on sale for $8 to $10, but, in any case, you need an efficient speaker, capable of handling 8 to 10 Watts. You can have a switch (well hidden) or a relay to let you use the speaker with your rig, if that will help you justify the cost.

Regardless of what type of horn or siren you use, there are some things you should do to make it and your entire alarm system as reliable as possible. First, you should have some way to lock the hood of your car, and you should wire the alarm system to sense the operation of the hood latch. This will provide some protection for the car battery and alarm wiring. However, you may also need a separate alarm power lead and ground from the car battery run so as to be inaccessible from outside the engine compartment. These precautions are for the more professional thief who notices the key switch and then tries to beat the system.

Also, there are some simple nontechnical things you can do to increase your protection. Try to pick your parking spot where your alarm will attract the attention you want and where there will be little time for the thief to try and find a way to beat your system.

Finally, remember that an alarm is not a perfect answer. There is only one sure way of protecting your rig — always take it with you. However, when that is not possible, and you recognize the risk, a loud siren or horn inside the car is the best protection I know of. ■

William Tucker W4FXE
1965 S. Ocean Drive, 18-S
Hallandale FL 33009

The Great Cover-Up

—a fiendish way to simplify schematics

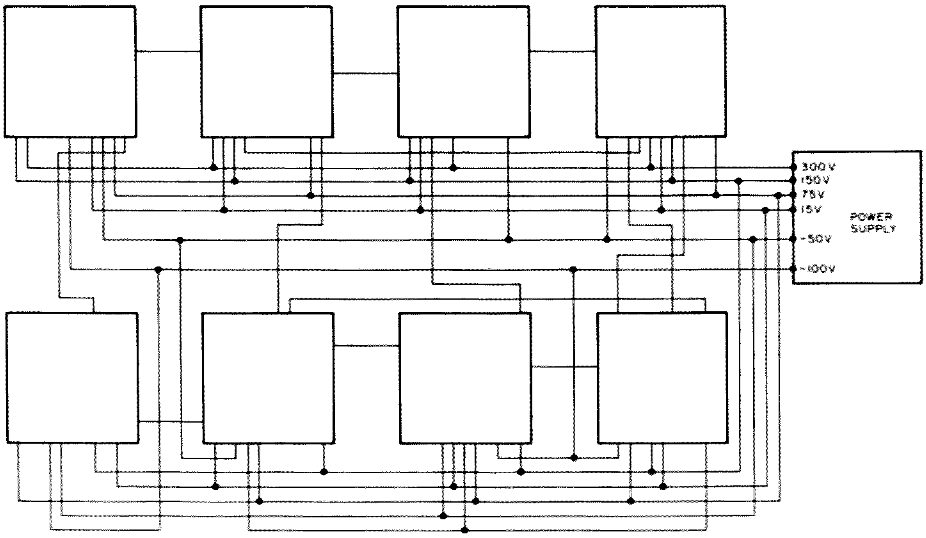

Fig. 1. Before.

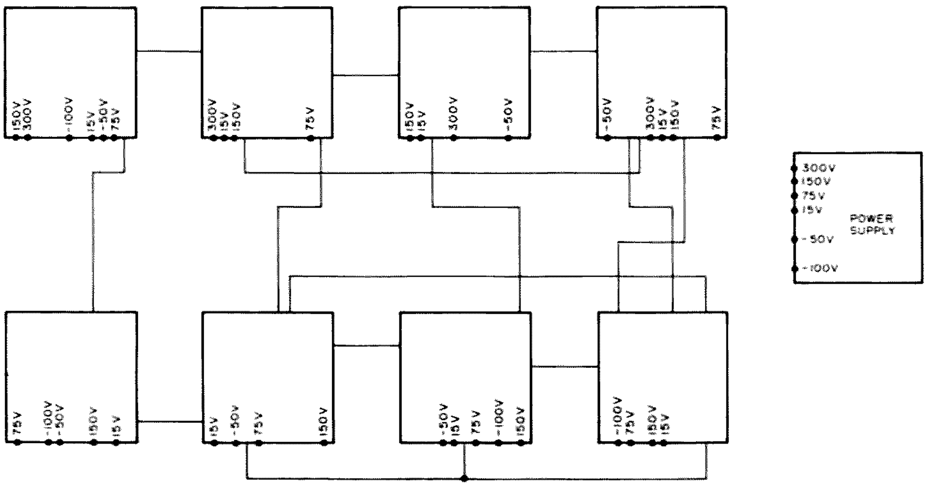

Fig. 2. After.

It is unfortunate that, over the years, not enough emphasis has been placed on the importance of a well-designed schematic diagram and its role in intelligent circuit analysis as a prelude to troubleshooting.

Since the beginning of multistage communication equipment, one of the most useful tools for the skilled technician has been the schematic diagram. However, too many schematics are improperly designed, representing an obstacle course and a time-consumer to the troubleshooter. The well-designed schematic diagram enhances the value of a piece of equipment to the user. With it, he can visualize the circuitry and see the signal paths with ease, which enables him to operate his equipment with a clear understanding of what is going on behind that beautiful panel. Also, he can appreciate better the unique features incorporated into his equipment . . . manufacturers, please take note.

There are a great many hams who have the technical knowledge and skills needed to service the rather sophisticated communication equipment available to them. These hams usually have a fine ac-

cumulation of test equipment and know how to use it, not only when repairs are necessary, but also for continuing checks on the performance of their rigs.

Such a ham quite often can take a studied look at a well-designed schematic diagram and, after digesting a few operational clues, can quickly localize trouble to a particular stage. In many cases, he can even pinpoint the specific component without the use of any test equipment other than his own senses.

It is surprising, indeed, that so many otherwise astute hams will tolerate a poorly-designed schematic and will tediously labor with it throughout the life of their equipment. They seem to be saying, "A schematic . . . is a schematic . . . is a schematic" (apologies to Gertrude Stein) and just letting it go at that.

A poorly-designed schematic diagram is one in which it is difficult to visualize the signal paths, voltage paths, and control paths. These schematics, correct in every detail as far as wiring is concerned, are needlessly cluttered with myriads of long lead lines from common voltage sources to the various stages, like railroad tracks in and out of a busy terminal. In addition, there are just as many wiring crossovers to contend with. Fortunately, chassis ground symbols are used extensively, and filament lines disappeared from most schematics many years ago. Otherwise, we would really have a mess.

More often than not, the draftsman is not at fault; he is drawing a wiring diagram that is correct. He is usually not technically qualified to design the schematic from a comprehensive analytical viewpoint. Proper guidance in these matters should come from the engineering department, where this type of know-how exists. Diagrams become further cluttered as the draftsman has to make changes, additions, and deletions as production progresses from model A to model B and so on. The draftsman looks for a clear spot on the schematic for that additional component, draws it in, and just runs long lead lines to it from its related circuit.

At this time, you may be asking, "What can I do about it?" Well, you can do quite a bit to that schematic to make it the useful tool that it should be. You can eliminate most of the clutter and use the resultant open space to relocate some of those remotely-placed components near their associated circuits. These revisions can be made leisurely, before the need for troubleshooting arises. As a bonus, the very act of uncluttering the schematic allows the ham to gain an intimate familiarity with the circuit, providing for greater appreciation and more enjoyment of his equipment.

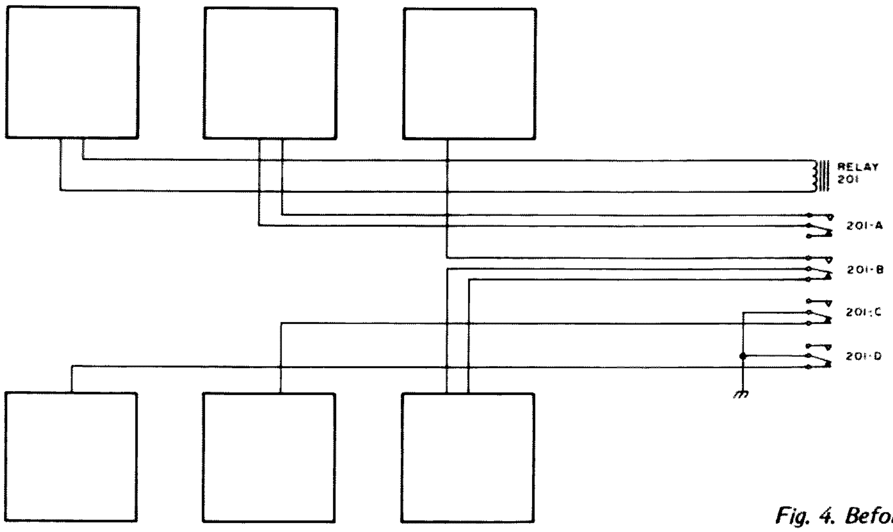

Fig. 4. Before.

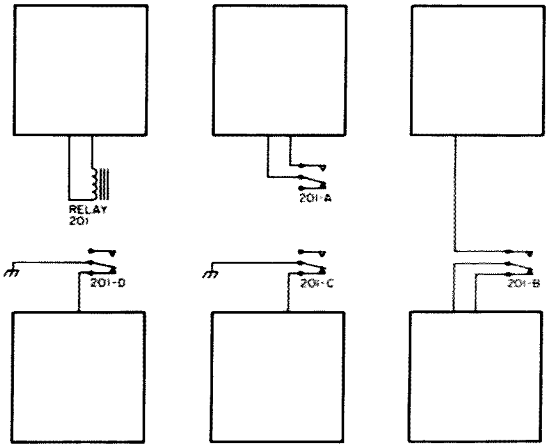

Fig. 5. After.

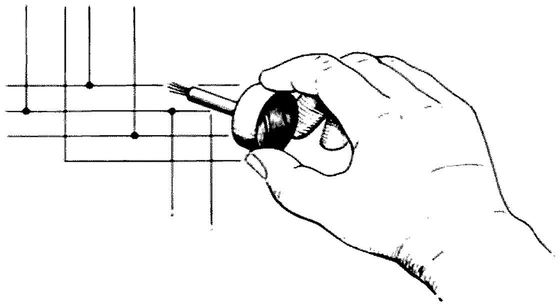

Fig. 3.

The first step in improving the visibility on the schematic is to erase all common-voltage bus lines. Starting with one voltage source at a time, carefully erase the lead lines, one at a time, and label the termination points with the appropriate voltage designation. This applies to all negative and positive voltages. Look around for other common bus lines, such as agc voltages, and erase them, too. When you are finished with the above, you will be utterly amazed to see all the empty space on the schematic, and you should now be able to see circuitry and interstage connections that were completely hidden in the maze before. Figs. 1 and 2 show an example of before and after, using block diagrams for simplicity.

I imagine that, at this time, a lot of eyebrows are being raised . . . "Erase those long lines on the schematic? Is this guy for real? How?"

Well, there is a simple and practical way of "erasing" those long lead lines — just cover them up with the white correction fluid used by typists to correct errors. It

comes in a small convenient bottle, with a fine brush attached to the lid. I use a product called Mistake Out, made by Liquid Paper Co. of Dallas. It has a water base and dries fast, so you can draw over it as if it was blank paper (Fig. 3). A fine-point black ball-point pen and a transparent straightedge do the trick nicely for such drawing.

Since the average schematic diagram supplied with today's complex equipment occupies several pages, it is convenient to mount the opened schematic on a large piece of corrugated cardboard while working on it. Also, it is wise to xerox copy the original for reference.

Getting back to the nitty-gritty, there are more long lines that you can eliminate to further improve the visibility on the schematic. For example: Multiple relay contacts are usually clustered together in a convenient place, and long leads are then run to the circuits they control. In this case, we just cover up the clustered assemblies and relocate them individually, close to their associated circuits. See Figs. 4 and 5 for a simplified before and after. Don't worry about having enough space, since the previous elimination of bus lines has left plenty of room available.

Relocating components serves two purposes – you not only cover up more long lead-line clutter, but also, by placing the component close to its related circuit, you provide for better analytical visibility. Of course, be sure to label items like relay contacts with the original letters and numbers.

An examination of the circuitry remaining after the major cover-up just completed will reveal that many leads that had to be detoured can now be routed directly through a shorter path, eliminating many crossovers at the same time. Fig. 6 shows an example of rerouting.

Now that a lot of clutter has been removed and some components relocated on the schematic, you might find that those two or three resistors scattered about really are part of a voltage divider and should be reunited.

Until now, I have dealt mainly with interstage items and have used block diagrams for illustration purposes. Now take a look at examples of

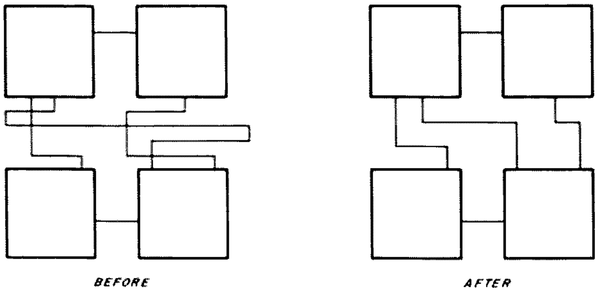

Fig. 6.

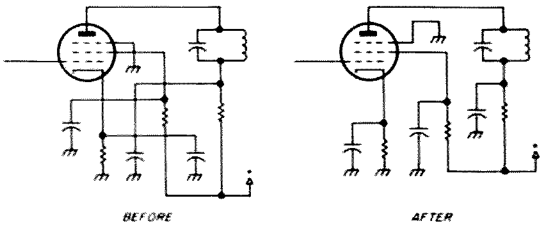

Fig. 7.

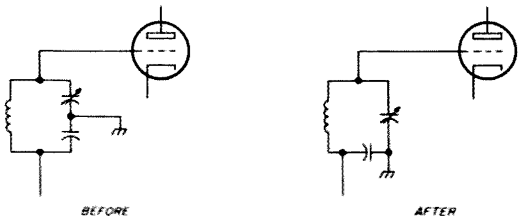

Fig. 8.

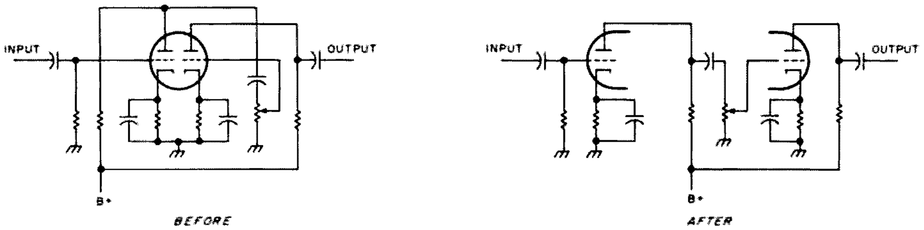

Fig. 9.

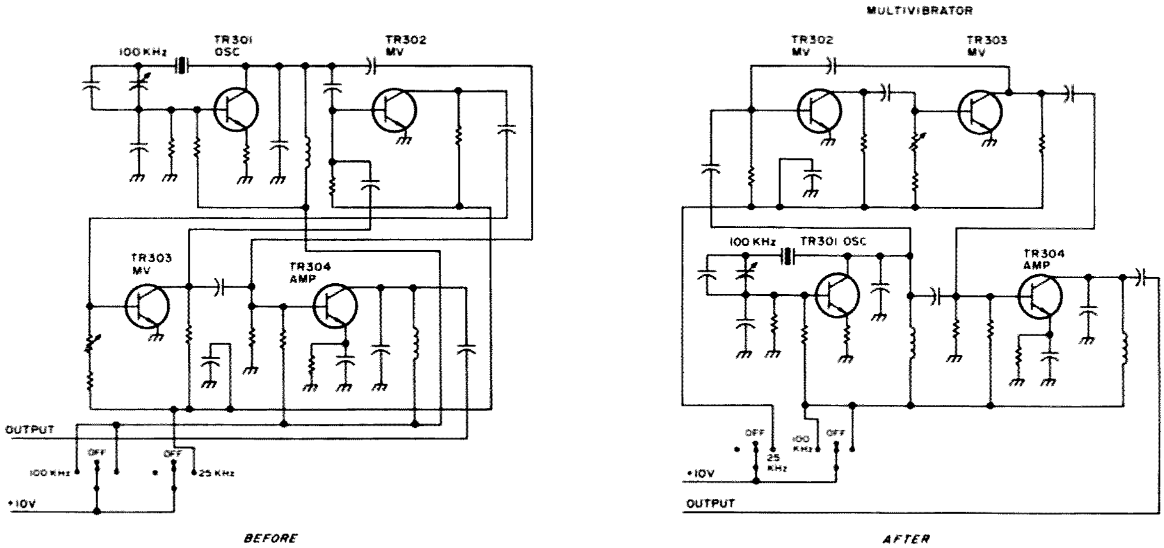

Fig. 10.

modifications that can be made to individual stage circuitry. Fig. 7 shows a typical mess that results when a draftsman pays no attention to the visual hazards of unnecessary crossovers. Sometimes part number lettering is in the way. That, too, can be covered up and redrawn. Improved visibility is the name of the game.

Fig. 8 shows a tuned circuit where the tuning capacitor is grounded, but not the coil. To complete the tuned circuit, a greater value fixed capacitor is used to place the coil at rf ground potential. It's a little easier to understand when redrawn as shown.

Fig. 9 shows a commonplace dual triode arrangement in a basic resistance coupled amplifier circuit, which can be made a lot easier to visualize by redrawing as shown.

Now, here is a rather complex modification: Fig. 10 shows a crystal calibrator as used in one of the popular transceivers. It uses a 100 kHz crystal oscillator feeding a buffer amplifier. When 25 kHz output is desired, voltage is applied to a multivibrator circuit consisting of TR-302 and TR-303 which is placed between the crystal oscillator and the amplifier. The original circuit can be fairly confusing until it is redrawn as shown, with the multivibrator untangled from the rest of the circuit. The same amount of space on the schematic is used. Note the reduction in crossovers.

As you progress through the circuitry, you will find that one simplification opens the door to another. When you finally compare your "great cover-up" to the xerox copy of the original schematic, you will wonder how you were ever able to cope with it. It is quite a revelation.

You now have a schematic diagram designed by an expert — YOU! ■

J. H. Everhart K3JE/2
313 Mason Rd.
Fairport NY 14450

The World Of Tone Control

—a virtual encyclopedia on the subject

Most active hams know of the widespread use of tone signaling in amateur radio these days. VHF FM and repeaters often require signaling other than voice or CW for repeater access, remote control, and autopatch functions. However, most of us think only of touchtone™ when we think of tone signaling. Undoubtedly, touchtone is the system most widely employed by hams. This is so because the encoders (pads) and decoders are fairly easy to build or obtain, and, more importantly, the number of different codes available is great. A single-digit system allows 12 signals (0-9, # and *), two digits gives 144 (ex. 12, 5#, 76, etc.), and so on. But in amateur usage, as in commercial two-way radio systems, this versatility is not always necessary. For simple control systems and for subaudible squelch, a single tone is adequate, allowing both encoder and decoder to become extremely simple. This article examines single-tone signaling and some simple high-performance encoder circuits.

Single-Tone Systems

As two-way VHF FM communications developed in the early 1950s, the need for a nonvoice signaling method on voice channels became apparent. A voice channel provided the vehicle for transmission of remote control information (for utilities, oil-pipeline companies, weather-monitoring equipment, and other unattended remote sites), or for selective calling (either paging or selectively calling one or more users of a radio system). Stripped down to fundamentals, the systems all relied on the transmission and decoding of predetermined highly stable tone frequencies throughout the audio spectrum, from approximately 50 Hz to 3 kHz.

The tones from 67.0 Hz to 250.3 Hz were standardized by the Electronic Industries Association (EIA) in their publication RS-220 for use in continuous tone-controlled squelch systems (CTCSS). These low-frequency tones are less audible to human ears than higher frequencies (and compatible receivers filter them out before the loudspeaker), so CTCSS is commonly referred to as subaudible squelch. Motorola's trade name is Private Line, GE's is Channel Guard, and RCA calls it Quiet Channel Squelch. CTCSS is frequently used on channels where several systems use the same channel or share a repeater. Each user has an individual tone, which is transmitted continuously while his transmitter is on the air. His own units respond to only his tone. Thus, the channel can be used by several groups, but only those who are being called will hear the calling station. Obviously, only one station can transmit at one time, but when other stations are on the channel, they will not be heard. Amateur repeaters with overlapping coverage area on the same channel can use different CTCSS tones on their input receivers, so adjacent area amateurs will not be retransmitted.

Tones above 250 Hz are used for a variety of purposes. Most are channelized, although the channels selected vary among different equipment manufacturers. The most common usage is for paging systems, which usually use two or more sequential tones and are not widely employed by radio amateurs. Finally, these higher frequency tones can be used for selective repeater access or for remote-control applications using tone bursts. The tone burst selective repeater access is like the CTCSS selective access. Each repeater recognizes a specific tone frequency and will not respond to signals with no tone or a different tone. The tone is sent as a short burst (100 ms to 1 sec) at the beginning of a transmission, which tells the repeater a valid user is present. The repeater will then operate with normal carrier access for a preset length of time. After this time period elapses, the burst must again be sent to "bring up" the machine. By this method, the burst need not be repeated for each transmission, and, once accessed, the repeater can be used by stations without the tone equipment.

Remote-control applications in commercial service are numerous. They occur whenever some action must take place at an unattended location where it is time-consuming or physically difficult to send a person. The most common amateur usage is for control of a remote base or repeater station from a separate control station loca-

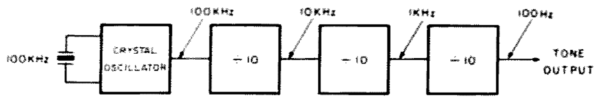

Fig. 1. Crystal-controlled audio tone generator.

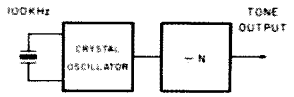

Fig. 2. Sophisticated crystal-controlled tone generator. For N = 100, f = 100.000 Hz; for N = 966, f = 103.519 Hz; for N = 933, f = 107.181 Hz.

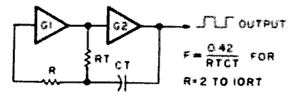

Fig. 3. CMOS gate astable multivibrator.

tion.

Frequency Control Techniques

In most single-tone signaling systems and in sequential multiple-tone systems, the tone frequencies are spaced only a short distance apart. Thus, good stability is required in the encoders, so they do not drift from one tone channel into the next. Similarly, the decoders must be very selective, so they respond to only the desired tone frequency. This high degree of performance must remain unchanged over wide temperature and power supply voltage variations and under severe shock and vibration conditions (in mobile and hand-held radios), and they cannot degrade with age. Commercial equipment designers found that the most practical means of obtaining good frequency stability and selectivity was by using resonant reeds in both their encoders and decoders.

So, 20 years ago, the tone systems were developed with reeds in mind. And, since the standards of operation were set then, tone systems now in use must be compatible with the older (and newer) reed systems. Recent equipment uses a variety of frequency-control devices, such as active filters, piezoelectric fork resonators, and crystal-controlled digital circuits, but they all are basically designed to operate to the same standards established for the reed-type systems. Circuitry using resonant reeds still is probably the simplest means of encoding and decoding tone signals in two-way FM service.

But reeds tend to be expensive (15-20 dollars apiece), and a new one must be used for each tone frequency. To the commercial user, $20 is not at all expensive, but to me, as a ham, it's bad, particularly since it's $20 per tone channel, per tone encoder/decoder. For hams, decoders aren't too bad, since few of us need them. Usually, they are used only at a repeater, for access or control, and, perhaps, occasionally at home. Most repeater groups can afford to use reeds for their decoders "on the hill." And, if an individual wants a decoder, he can afford one using reeds. It's nice to be flexible, though, for encoders, since they are more common.

With these considerations in mind, I decided to look for a relatively inexpensive way of building a reed-system compatible encoder. As a starting point, I set the following conditions:

1. The encoder must be fairly cheap.
2. It must maintain ±1% stability to be compatible.
3. Wide temperature performance is desirable, at least 0-50° C., -30 to +60° C preferable.
4. The encoder must not require extensive modification to operate on any audio frequency.
5. Power drain must be as low as possible.
6. The encoder should not use any expensive or hard-to-get components.
7. Critical component matching or selection must not be needed.
8. Output waveshape has to be sinusoidal.

So much for my "dream list." The next few paragraphs give some possible choices.

Reeds, of course, were discounted because of their cost and the need for a new unit for each tone frequency. Piezoelectric forks, made by Murata and Iwata, among others, are more difficult to ignore, if you can afford the minimum charge per order; they are less than $10 apiece. A local repeater group has bought several dozen Murata forks at a time, for control encoders and decoders. For a single frequency, this is fine, though it's awkward for small-quantity orders or for multiple-tone usage.

Another possible approach is to use an RC sine wave oscillator, such as a Wein-bridge or bridged-tee circuit. GE has used twin tee networks for their tone needs much more than they have used reeds. Others, such as Aerotron, Vega, Ferritronics, Johnson, Alpha, and Bell and Howell use either RC oscillators or active filters for tone equipment. For equipment manufacturers, this approach is fine, since the components are relatively inexpensive in large quantities, factory-made circuits are stable, and (in some cases) retuning is easy. Duplication by the home builder, though, is not so easy. Precision components are difficult and expensive to get when you only want a few. And, often, precision component matching or critical circuit adjustments are required. Well-equipped and experienced amateurs can duplicate the performance with these circuits, and many do. What I wanted, however, was simplicity, not headaches.

LC oscillators like the Colpitts, Hartley, Clapp, etc., are not at all attractive for audio frequencies. First, the inductors are large and expensive. Above 1 kilohertz or so, the 88 MHz Bell Tel surplus toroids work, and those with money can buy pot-core inductors. Even then, though, the required capacitors can be quite large. Careful component selection (temperature coefficient matching) is a confining requirement. Finally, frequency adjustment is difficult. The large values of capacitance (often .01 uF to 1 uF) preclude the use of trimmer capacitors. Pot cores are adjustable over about a 10% range, but they are difficult to get.

One extremely attractive way to generate precision tones is to do it digitally. Avcom and Communication Specialists both market tone equipment that does just that. They use a quartz crystal or ceramic resonator to generate a very stable signal somewhere above the audio range, usually between 100 kHz and 5 MHz. This signal is then passed through a digital circuit to bring the frequency down to the desired range. There are several ways to do this. One way is shown in Fig. 1. All amateurs should be familiar with the stability of 100 kHz crystals — most of us have used them as receiver calibrators. This highly stable source is fed to three digital dividers, each of which divides its input frequency by 10. Thus, the total division is 1000, and 100 kHz divided by 1000 produces 100 Hz. The output frequency stability (in percent) is identical to the crystal stability. Either CMOS or TTL frequency dividers can be used for a fairly simple circuit. This scheme suffers the same drawback as the reed encoders. For each different tone frequency, a new crystal is required. They are less expensive than reeds, but they are still a nuisance to use for more than a few frequencies.

A different approach can be used to get around this shortcoming. Fig. 2 shows how. Here, instead of changing the crystal fre-

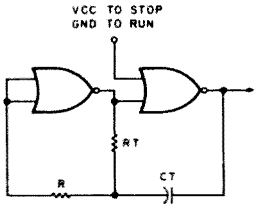

Fig. 4(a). NOR gate multivibrator with on-off control.

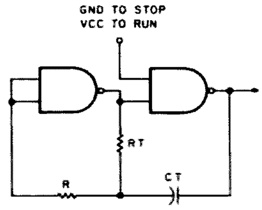

Fig. 4(b). NAND gate multivibrator with on-off control.

R_T	C_T	Frequency	R_T	C_T
102k	.082 uF	50 Hz	470k	.018 uF
108k	.039 uF	100 Hz	460k	9100 pF
105k	.02 uF	200 Hz	450k	4700 pF
102k	8200 pF	500 Hz	470k	1800 pF
108k	3900 pF	1000 Hz	460k	910 pF
105k	2000 pF	2000 Hz	450k	470 pF
117k	1200 pF	3000 Hz	424k	330 pF

Table 1. Calculated tuning component values.

quency, we can change the division ratio of the divider. Digital types call this a ÷ N circuit, where N is a programmable preset number. As shown, for N = 1000, we can get 100.000 Hz out. With N = 966, f out = 103.519 Hz, and N = 933 gives f out = 107.181. The desired CTCSS tones shown are 100.0 Hz, 103.5 Hz, and 107.2 Hz, but those shown are only about .02% away. By setting the crystal frequency high enough, N can be chosen to get any desired output frequency.

With increased circuit complexity, a more sophisticated frequency synthesizer can be made to generate virtually any audio frequency from a single crystal-controlled oscillator. The digital approach, though, is still a rather expensive means to build a tone decoder. Undoubtedly the semiconductor people will eventually change this, but for now, it's too complex and expensive for me. Incidentally, the above circuits still don't produce a sine wave, but a square (or rectangular) wave.

Some special-function ICs can be used as tone encoders – specifically, the Signetics NE566 and NE567. The 566 is the same IC chip that is used for the NE565 phase locked loop, but the 566 brings out only the oscillator pins. It generates both triangular and square waves and can be tuned over a 10 to 1 frequency range with a single potentiometer. However, it has several shortcomings. First, it requires at least 10 volts for its power source. This means that it is difficult to power from 12 volts using a voltage regulator. Secondly, current consumption is a little high – 6 to 10 mA at 10 volts. Third, the frequency stability with temperature (even with perfectly stable tuning components) can cause problems. Finally, the required capacitance is too large. Even at 1 kHz it needs at least a .01 uF capacitor. At 100 Hz, 0.1 uF would be needed, and .1 uF temperature stable capacitors are huge! The NE567, a tone decoder, is more useful, since it needs only 5 volts and is fairly temperature stable. But it, too, uses large value tuning capacitors. (Yes, I said it's a tone decoder, but it can also be used to generate tones).

Function generator ICs, such as the Intersil 8038 and Exar 2206, can generate sine waves directly. I discounted them, because they are relatively expensive, need at least 10 volts dc, and are current-hungry.

The NE555 timer can be used as an oscillator down to 5 volts with several advantages. It needs only a few milliamperes, and the tuning components can be chosen to use small value capacitors. Its major deficiency for encoder usage is its fairly poor temperature stability.

Now for the circuit I did use: When RCA Semiconductor Division published their ICAN-6267 application note,[1] they included a very interesting circuit, shown in Fig. 3. This circuit is basically a square wave generator, called an astable multivibrator. It is composed of two CMOS logic gates, G1 and G2, with timing components R_T and C_T to set its operating frequency, and another resistor, R. Resistor R affects operating frequency only indirectly, but, as described in the RCA note, it enhances the circuit's stability. Because of the CMOS gates' excellent characteristics, the multivibrator exhibits extremely good frequency stability. Its output frequency remains constant over wide temperature and supply voltage variation.

When I first saw the circuit, I had little use for tone encoders, but I did use it in lots of applications where I needed a good, simple, stable digital circuit frequency source. Then WA9VGS wrote an article for *73* using the same multivibrator in a tone encoder.[2] He also pointed out the quite desirable stability, as mentioned by RCA. Now then, let me expand on using the CMOS multi in tone encoders, lest you think this is just a rehash of WA9VGS's ideas.

Tone Encoder Pieces

To fulfill the goals set many words ago, I'll describe several building block circuits that can be used in combination to make a few different kinds of tone encoders. Naturally, the oscillator is the keystone to this project, so let's look at it first.

Fig. 3 is my implementation of the basic tone source. It is the same as RCA's and, thus, the one that WA9VGS presented. I've shown the

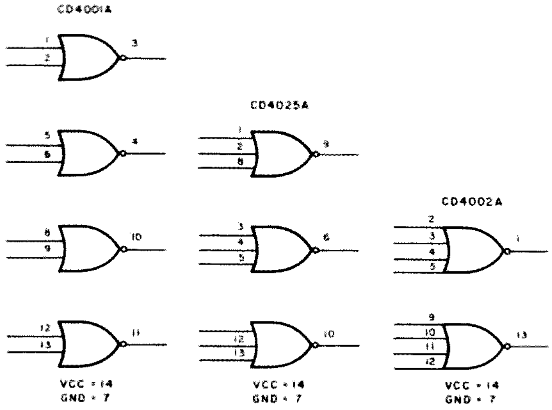

Fig. 5(a). CMOS NOR gate pinouts.

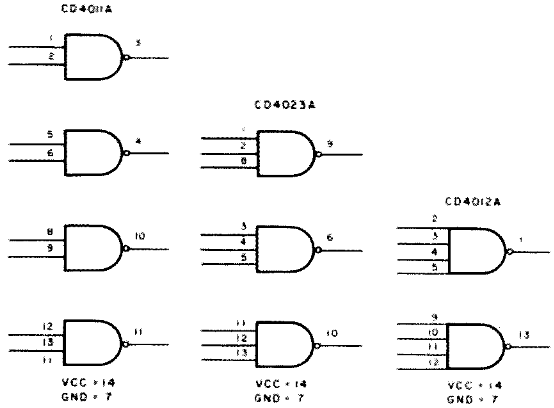

Fig. 5(b). CMOS NAND gate pinouts.

individual gates as inverters — more about that later. The multivibrator's output frequency is determined primarily by the timing components R_T and C_T. You can choose these components by using the formula $f = 0.42/R_TC_T$, which I have found to hold true to within 5 percent if resistor R is at least twice as large as R_T. R's value is not critical. I've used values of 2 to 10 times R_T with no difficulties, but be sure to keep to that range for best stability. Table 1 shows some typical values of R_T and C_T across the audio spectrum.

To retain the inherent stability of this oscillator, a few precautions are necessary in selecting the R_T and C_T components. Resistors should be temperature stable, such as the tin film precision resistors you see listed in the industrial electronics catalogs. The types with "RN" numbers are preferred, though the less expensive "RL" models are what I usually use. A little shopping around at hamfests and surplus houses can get you a good selection of these at low cost. The capacitors needed are slightly easier to get. Ideally, they should be NPO ceramics (zero temperature coefficient) or dipped silver mica. Polystyrenes are also suitable at lower cost. The Mallory SX series polystyrene capacitors are widely available at reasonable cost. Polycarbonate capacitors can also be used, if you are careful in selecting them. Mylar and paper dielectric capacitors are definitely not adequate for high stability over wide temperatures, but they can be used in room-temperature applications.

These restrictions on the types of components limit the resistance and capacitance range that can be used. Precision resistors are usually difficult to get higher than 470k, and stable capacitors are large (and expensive) above .022 uF. So I recommend that you use resistors between 100k and 470k for R_T and capacitors between 820 pF and .022 uF for C_T. If you have good components outside these limits, use them. The limitation is not due to the multivibrator, but component availability.

What I've shown as inverters in Fig. 3 can be any CMOS gates that include an inversion function. Thus, NAND and NOR gates, as well as inverters, can be utilized. There are several reasons for doing this. One might be that you have some NOR gates and don't want to buy inverters. Or, alternatively, maybe you have a circuit that needs a stable oscillator, and somewhere in your system you have a few free gates available. One big advantage to using a gate is that you can use one of the unused inputs to turn the oscillator on and off. WA9VGS used this function to generate a tone burst. It can also be used to make a dual-tone encoder.

Fig. 4(a) shows how to use NOR gates, and 4(b) demonstrates the NANDs. Be aware, though, that there will be a short "chirp" as the oscillator is turned on and off. Usually this causes no problems, but keep it in mind. Also, if you use gates rather than inverters, connect unused inputs together, as in Fig. 4.

Fig. 5 shows pin connections for various 4000 series gates that can be used. RCA's application note[1] gives some pertinent advice, particularly that the "B" series gates (including the inverter CD4069B) have different characteristics and may not perform as well as the "A" series devices shown. Also, they warn that the buffers such as the CD4009A, CD4049A, and CD4041A are *not* recommended for multivibrators, due to their higher power consumption. Devices from other manufacturers may also behave differently, so beware.

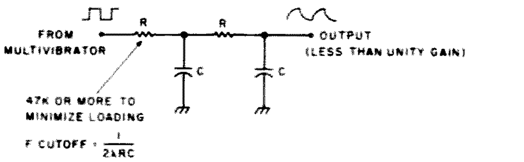

Fig. 6. Passive low pass filter.

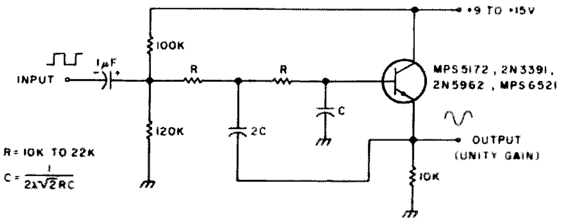

Fig. 7. Single-transistor active low pass filter.

I've used the "A" series RCA gates (not inverters) successfully, but a Japanese CD4001 was not as stable. Note that the availability of multiple gates can let you make more than one oscillator per IC package. Using a 4001 or 4011, you can generate two different frequencies. But don't use gates from different packages for the same oscillator, because the two chips may not have characteristics that track with voltage and temperature.

Now I've shown a stable frequency source, but it has a square wave output, so one of my criteria hasn't been fulfilled. To get a sine wave from a square wave, the harmonics must be filtered out.

If you're wondering why I want a sine wave, I'll tell you. In my applications, the tone encoder has been used with FM radio transmission. In the usual FM systems, the audio spectrum is shaped before transmission, then limited. This is called pre-emphasis, because the higher frequencies in the voice range are accentuated before clipping. At the receiving end, the higher frequencies are then attenuated to give flat audio response. At high deviation levels, the pre-emphasis causes a square wave's higher frequency components to predominate before going into a limiter, causing a loss of the low-frequency components. When this signal is received and reprocessed, the desired tone is then much weaker than its harmonics, causing severe distortion. And even at low deviation, an imbalance in pre-emphasis and de-emphasis can produce distortion. Additionally, in CTCSS or subaudible tone squelch usage, the harmonics from a square wave produce an annoying "buzz" at the receiving end.

I've used a few simple methods to "round off" the square waves' corners. The

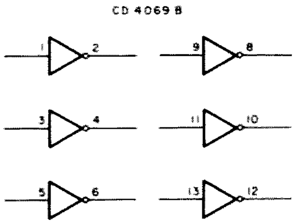

Fig. 5(c). CMOS inverter pinouts.

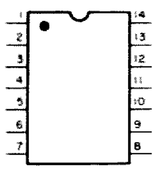

Fig. 5(d). Dual inline package — top view.

Frequency range	Capacitor C
50 to 100 Hz	0.1 uF
100 to 200 Hz	0.047 uF
200 to 400 Hz	0.022 uF
400 to 800 Hz	0.01 uF
800 to 1600 Hz	0.0047 uF
1600 to 3200 Hz	0.0022 uF

Table 2. Capacitor values for bandpass filter.

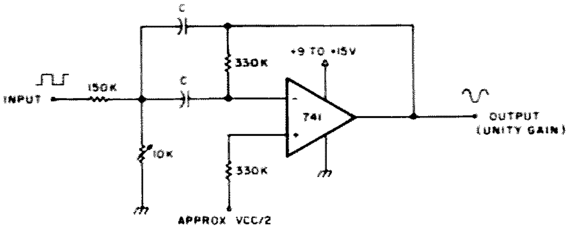

Fig. 8(a). Tunable active bandpass filter.

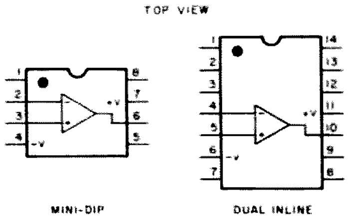

Fig. 8(b). 741 operational amplifier pinouts.

first and simplest way is to use an RC low pass filter, shown schematically in Fig. 6. The resultant output is not really a sine wave, but a rounded triangular waveform. Using a two-section filter gives better results than a single R and C, although even this is not the ultimate. Another low pass filter, using an active filter section, can improve the waveshape. See Fig. 7. Here, the attenuation of higher frequency components is improved at the cost of more components. The active low pass filter provides the added advantage of not attenuating the desired frequency as the passive version does. References 3 and 4 give more detailed data on designing simple active low pass filters. Either low pass filter can work over a 20 or 30 percent range without retuning.

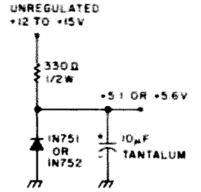

Fig. 9(a). Zener diode voltage regulator.

A more sophisticated means of converting a square wave to a sinusoid is to use a bandpass filter. In this case, a simple transistor circuit isn't enough. Fig. 8 is a multiple-feedback bandpass filter using one operational amplifier. Table 2 gives component values for the 50 to 3000 Hz range. Each set of components uses identical resistors; only the capacitors need be changed. A 10k potentiometer allows a 2 to 1 tuning arrangement for each set of capacitors. The bandpass filter does a much better job of filtering out harmonics, but has to be retuned to pass frequencies more than 5 to 10% apart. For design information, see reference 5.

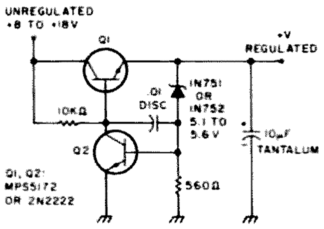

Fig. 9(b). Power-conserving voltage regulator.

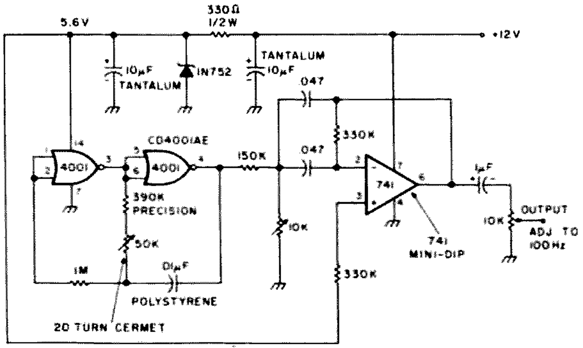

Fig. 10. 100 Hz CTCSS encoder.

The CMOS oscillator is relatively insensitive to power supply voltage changes, with less than a 1% frequency shift for a supply voltage change of one volt. But operation in portable or mobile service often means widely varying power supplies. The obvious way to handle this case is by using a voltage regulator. Fig. 9(a) is the simplest regulator, using only a current-limiting resistor, a zener diode, and a filter capacitor. The resistor should be chosen to pass at least 15 mA, to ensure proper zener action. The zener diode's breakdown voltage can range from 5.1 volts to 10 volts or so. My experience has shown that the best regulation and frequency stability can be gotten with a 5.1- to 6.2-volt zener. Noise from the unregulated voltage line and zener diode-generated noise are bypassed by the electrolytic capacitor. A 5 or 10 uF tantalum capacitor is ideal, although an electrolytic of the same value can be used if it is paralleled with a .01 to .1 uF disc ceramic. For somewhat better regulation and much less wasted power, refer to Fig. 9(b). This is a pretty basic regulator that will operate from at least 7.5 volts to 18 volts with no component changes and uses only a few mA. Integrated circuit regulators, such as the 78L series manufactured by Fairchild, can also be used, although they sometimes misbehave with loads drawing less than 5 mA.

Construction Tips

In general, component placement and wiring of the circuits in this article are the same as for most audio frequency circuits. Either perforated board or printed wiring techniques are adequate, so long as good components are used. CMOS integrated circuits do need careful handling to prevent damage from static electricity. I suggest that you read the handling recommendations in RCA's CMOS databook to avoid trouble.

For optimum encoder stability, high quality parts are needed for R_T and C_T in the CMOS multivibrator. To ease tuning, R_T can be made up of two resistors in series. One can be large in value, as a coarse adjustment. Then a lower resistance can be selected for the fine adjustment. If you want to use a potentiometer for the fine adjustment, a 10- to 20-turn cermet or wire-wound trimpot will ensure stability. Since precision is the goal, precise measurement of the encoder's operating frequency should be made with a frequency counter during initial setup.

The low pass filters shouldn't need any tuning. Just calculate the desired R and C values, and, if you're cautious, check the output waveshape with an oscilloscope. The bandpass filter is adjusted by setting its 10k potentiometer for maximum output. Filter components are not critical. Carbon composition resistors and mylar capacitors are fine.

Proven Examples

The building-block circuits described can be interconnected in several ways. Fig. 10 is the schematic for a CTCSS encoder. It operates

in the area of 100 Hertz, and I've installed it in a Motorola T-44 UHF transceiver. Power is taken from the 12-volt filament line with a simple half-wave rectifier and an electrolytic filter capacitor. Since power consumption need not be minimized, a zener diode regulator is adequate. The CMOS multivibrator uses a CD4001AE, because I had one. The low-distortion output, desirable for CTCSS operation, is provided by using a bandpass active filter. Total current drain is about 25 mA.

A portable tone encoder for remote control is shown in Fig. 11. It is intended to be coupled to a transmitter by holding its loudspeaker a few inches from the transmitter's microphone. I built it into the case of a transistor radio whose audio output stage and loudspeaker had been salvaged. Since the cheapest, easiest way of getting the amplifier is by cannibalizing one of these imported jobs, I haven't bothered to indicate the amplifier schematic. There are two separate oscillator sections at two different frequencies around 2 kHz which can be switched for two separate control functions. For simplicity and minimum power drain, the active low pass filter is used. To get low power drain, the two-transistor voltage regulator is used. Output level is set with the radio's volume control. The multivibrator sections draw about 300 uA each (only one is energized at a time), the active filter draws about 0.5 mA, and the regulator consumes about 2 mA. Total current drain is about 10 to 15 mA, primarily because of the current-hungry audio amplifier. To maximize battery life, I use alkaline 9-volt batteries, Radio Shack 23-553. They're $1.59 apiece, but it's nice to have a good, reliable battery when you need it.

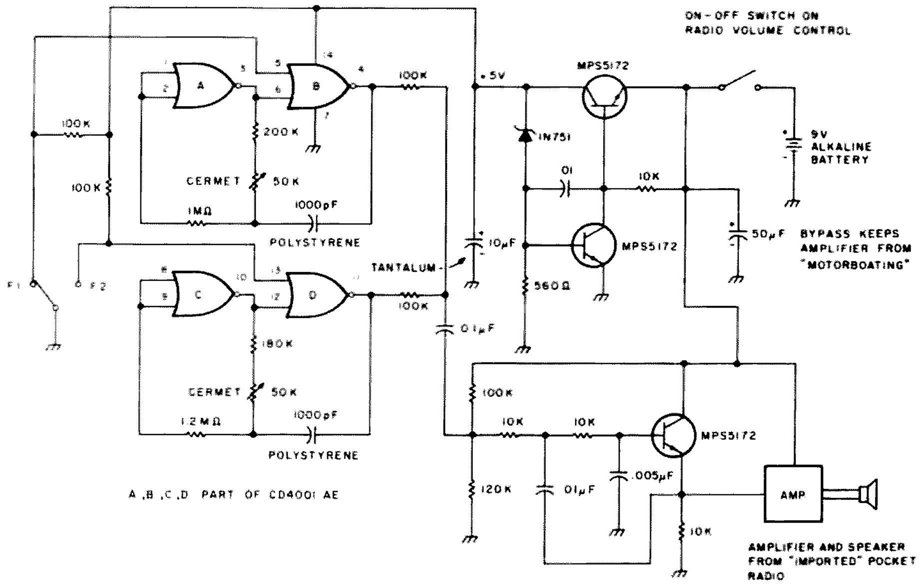

Fig. 11. Selectable two-frequency pocket "beeper" encoder.

Closing Comments

If my many cautions, warnings, and recommendations are taken into account, a good stable reed-compatible tone encoder can be built for much less than the cost of a single reed. I estimate maximum cost of either encoder described to be $10. Performance is pretty close to the desired goals mentioned earlier. I built and tested a number of these circuits, and the stability has been excellent. Encoders using polystyrene capacitors can hold ± 0.5% stability over a 0 to 50° C range and be within ± 1% over the -30° C to +60° C. range. NOP ceramic and dipped mica capacitors gave a total drift of 1% over the -30° C. to 60° C. range with almost all of my CMOS oscillators. Out of a dozen or so breadboarded encoders, one showed excessive drift at cold temperature. This was due to a screwy CMOS chip, and it went outside the specified range only past -15° C.

I've tried to be very conservative in design, in hopes of providing some guidelines for high-performance circuitry. Take me with a grain of salt, and have fun with good reliable encoders. ■

References

[1]ICAN-6267, "Astable and Monostable Oscillators Using RCA COS/MOS Digital Integrated Circuits," RCA Semiconductor Div., Somerville, N.J.

[2]Way WA9VGS, "The MOS Tone Encoder," *73 Magazine*, Dec., 1972.

[3]Hayward W7ZOI, "Simple Active Filters for Direct-Conversion Receivers," *Ham Radio*, April, 1974.

[4]Schmitzer DJ4BG, "Active Audio Filters," Part 1 and Part II VHF Communications, 1 (1969), Edition 4.

[5]Tobey Graeme and Huelsman, *Operational Amplifiers, Design and Applications*, McGraw-Hill, N.Y., 1971, Chapter 8.

LETTERS

from page 55

spread interest in that receiver and possible modifications to it. You might want to pass on to your readers some information as to where they can obtain versions of the FRG-7 that have enhanced capability of SSB and CW reception.

Gilfer Associates, Inc. (a *73* advertiser), PO Box 239, Park Ridge NJ 07656, sells the FRG-7 with a 4 kHz i-f filter installed for $308. With a 3 kHz filter, the price is $315. For those wanting even better selectivity, Radio West, 3417 Purer Road, Escondido CA 92025, will install a Collins filter and realign the FRG-7 for $85.

In neither instance is it specified whether these filters are switchable. Of course, for only SSB or CW, this would not be of importance, but, for those who would like to listen to shortwave broadcast programs, it would be desirable to be able to switch to the normal i-f bandwidth characteristic of the unmodified FRG-7.

Carl C. Drumeller W5JJ
Warr Acres OK

CONVERT TO GREEN

In addition to being a very active amateur, I am professionally an optometrist. Almost all of the new PLL LED readout equipment today is red. Almost without exception, red LEDs are difficult to read in bright ambient light. In addition, at night, all farsighted people (hyperopes) who do not have their glasses on or people who do not wear glasses and who show some hyperopia have great difficulty distinguishing red figures and letters. This is because red is at the far end of the visible light spectrum. The peak visibility area is yellow-green.

It would be most helpful if manufacturers realized this human limitation and converted to green or slightly blue-green readouts for all equipment.

J. H. Robinson O.D., F.C.O.V.D.
Creston IA

Joseph M. Fedock N3IE
324 N. Orange St.
Media PA 19063

Solve Those Parallel Problems

—HP-25 programs choose the values

Have you ever found yourself in the situation where, after collecting the parts for your favorite project and laying them out on the bench in anxious anticipation of the ritual of soldering and scenting the air with flux vapors, you find that you're short by one lousy resistor? A quick shuffle over to the junk box turns up only a couple of transistors from someone's pocket radio, and a few moldy-looking resistors that were probably last touched with electric current when Morse was busy trying to devise a more confusing code to foist upon an unsuspecting world. Of course, these old resistors couldn't possibly be the right value, could they? After all, when they talked about resistors in those days, they were talking about megohms and not a measly 1.2k. Okay. Sit back, relax, and try to reason this out like a rational being. "Let's see, those transistors seem to show a forward resistance of about six hundred Ohms, and there are two of them. Wonder what hours and hours of full-volume rock music has done to the resistance characteristic of these audio devices? Drats, too big to fit on the PC board. Oh, well . . . none of these resistors wants to add together in the right way, anyway. Hey! Orange-blue-red — gee, that looks pretty. Ah, yes, three point six . . . and the lowest value here is one point eight kilohms . . ."

Sound all too familiar? It

STEP	KEY	CODE
01	RCL 0	24 00
02	g $\frac{1}{x}$	15 22
03	STO 1	23 01
04	STO 2	23 02
05	g $\frac{1}{x}$	15 22
06	STO 5	23 05
07	1	01
08	STO +6	23 51 06
09	RCL 6	24 06
10	RCL 7	24 07
11	f x=y	14 71
12	GTO 17	13 17
13	RCL 1	24 01
14	RCL 2	24 02
15	+	51
16	GTO 04	13 04
17	0	00
18	STO 6	23 06
19	RCL 5	24 05

MEMORY REGISTER

* M 0	—	R	(resistance)
M 1	—	$\frac{1}{R}$	working register
M 2	—	$\frac{1}{R_n}$	incremented working register
M 3	—		FREE
M 4	—		FREE
M 5	—	R_T	incremented working register
M 6	—	n	incremented working register
* M 7	—	n	(number resistors in parallel)

Asterisk (*) denotes user-entered data in this register location.

STEP	INSTRUCTION	INPUT	KEY	OUTPUT
1	Key in program			
2	Store resistance value	R	STO 0	
3	Store number of resistors in parallel	n	STO 7 f PRGM	
4	Run program		R/S	R_T
5	Values of R and n can be changed after any run			

Program 1. $R_T = 1/[(1/R_1) + (1/R_2) + \ldots + (1/R_n)]$, where $R_1 = R_2 = \ldots = R_n$, n any whole number less than infinity, given R and n, to find R_T.

has happened to me more times than I care to remember. Of course, the moral of the foregoing story is to connect the 3600 and 1800 Ohm resistors *in parallel* to arrive at an effective total resistance of 1200 Ohms. The only trouble with this solution is that it is not intuitively obvious just what values in parallel will yield a desired total. Well, I sat down and pondered this problem for some time, with various and sundry possible solutions presenting themselves. None possessed the necessary features of being quick and easy to use, while demanding a minimum of preparation and bothersome detail to execute.

Then one day a friend of mine dropped by to show off his newly-acquired "toy," an HP-25 pocket programmable calculator. To make a long story short, the calculator proved to be just the tool needed to remove the mask of unfamiliarity from the parallel resistor combination. This article will hopefully provide you with the programs necessary to be able to solve some fairly complex parallel problems in your own everyday electronic work.

The first two programs are rather straightforward treatments of simple combinations. Program 1 provides the total resistance when a given number of equal value resistors are paralleled. Program 2 provides for the solution of two to eight different value resistors in parallel. In these two programs, as in all the rest of them, the execution sequence is to first key in the program in write mode, switch to read, and store the appropriate variables in the designated memory registers. (Note the use of M instead of R to denote register locations, in order to prevent confusion with R signifying resistance.) While possibly taking a little more time than simply stopping the run and having the user key the necessary data into the display at critical points, this alternate process allows for repeated runs of the same program while allowing one variable to be changed at a time – a very convenient characteristic, indeed.

Programs 3 and 4 are really the essence of this collection, and are probably the most useful. To demonstrate Program 3, let's assume you want to build a dummy load for your transmitter and have a few handfuls of common value resistors lying around going unused. To find out how many resistors would be needed to present a 52 Ohm match, simply enter the value of one resistor in memory location 0 and the desired total resistance (52 Ohms) in memory 6. The program operates by adding resistors in parallel one at a time and comparing the total resistance arrived at after every addition to your desired total. When the actual total becomes less than the target total, the program stops the addition process, subtracts one resistor, looks at that total, and compares the two. It then displays the number of resistors that will give a value closest to the desired one. Pressing the Run button again displays the actual resistance you would get from connecting this many resistors in parallel. If you are indeed solving a dummy load problem like this one, or a termination problem of some kind, you can add the Swr Tag onto the end of the program. Then, when you hit Run yet a third time, the display will show the swr caused by the use of that actual total resistance rather than the ideal one.

Program 5 is actually the core of Program 4, simply pulled out and set aside by itself to handle the very straightforward problems that do not require the complexity of Program 4. Such a case would occur when you know the total resistance desired and the value of one of the two resistors to be used to arrive at that total. However, when you don't know either of the two values, as in the situation of our opening episode, then Program 4 can

STEP	KEY	CODE
01	RCL 0	24 00
02	g $\frac{1}{x}$	15 22
03	RCL 1	24 01
04	g $\frac{1}{x}$	15 22
05	+	51
06	RCL 2	24 02
07	g x=0	15 71
08	GTO 37	13 37
09	g $\frac{1}{x}$	15 22
10	+	51
11	RCL 3	24 03
12	g x=0	15 71
13	GTO 37	13 37
14	g $\frac{1}{x}$	15 22
15	+	51
16	RCL 4	24 04
17	g x=0	15 71
18	GTO 37	13 37
19	g $\frac{1}{x}$	15 22
20	+	51
21	RCL 5	24 05
22	g x=0	15 71
23	GTO 37	13 37
24	g $\frac{1}{x}$	15 22
25	+	51
26	RCL 6	24 06
27	g x=0	15 71
28	GTO 37	13 37
29	g $\frac{1}{x}$	15 22
30	+	51
31	RCL 7	24 07
32	g x=0	15 71
33	GTO 37	13 37
34	g $\frac{1}{x}$	15 22
35	+	51
36	GTO 38	13 38
37	x $\gtrless$ y	21
38	g $\frac{1}{x}$	15 22

MEMORY REGISTER

- M 0 – Enter R values
- M 1 – starting at M 0
- M 2 – and proceeding up.
- M 3 – Be certain
- M 4 – no values are left
- M 5 – from previous
- M 6 – calculations
- M 7 – in upper registers.

STEP	INSTRUCTION	INPUT	KEY	OUTPUT
1	Key in program			
2	Store resistances	R_1	STO 0	
3	Store resistances	R_2	STO 1	
4 to 9	Store resistances	etc.	etc.	
10	Run program		f PGRM	
			R/S	R_T
11	Program reads linearly up registers from M 0 to M 7 and stops at the first register containing 0.			

Program 2. $R_T = 1/[(1/R_1) + (1/R_2) + \ldots + (1/R_n)]$, *where* $R_1 \neq R_2 \neq \ldots \neq R_n$, $n \leqslant 8$, *given* R_1 *and* n, *to find* R_T.

become just the cure the doctor ordered. Basically, all you need do is enter your desired total resistance in memory 0 and a search increment in memory 1. When you push Run, the calculator will happily sit there, purring along, just churning out various possible combinations of resistances that will give the desired total. It does this by looking at the R_t you specified, adding delta, the search increment, onto R_t and then using this value as R_2 to arrive at a corresponding value for R_1. It then goes back, takes this new value of R_2, and, adding delta to it again, continues on. Since this program is written as an endless loop, if you forget about hitting Stop after starting it, our faithful little servant, the calculator, will eat its heart out (i.e., deplete its batteries) trying to provide you with a combination you'll like. Please don't be cruel. Just remember to always stop when the display is showing the value of R_1 (signified by three pauses, which appear in the display as three blinks) and you won't encounter any difficulties. If you want to hold any two values, enter Go To 21 and Run. The display will show R_2 and stop. Press Run again to get the corresponding value of R_1 to hold in the display. The program shows values of R_2 normally incremented upwards in value, while the corresponding R_1 values increment downwards. This can be changed, and the program run backwards, by going to step 26. The values of delta and the resistance value used as the starting point for the search can be changed after any stop command, by carefully following the execution instructions printed with the program.

And there you have it — the solution I have been using to try to get a grasp on these slippery parallel problems that crop up every now and then in my electronic endeavors. At this point, your only complaint is probably that it just takes too long to load a program into the calculator every time one of these problems comes up. If only you had a fancier, card-programmable one. You most likely have the equivalent and you may not even know it. It's called a cassette tape recorder — those little demons that have been turning up everywhere someone wants to put something on tape. No, no special circuits are needed to read and write, either. Just sit down with the programs in front of

STEP	KEY	CODE
01	RCL 0	24 02
02	g $\frac{1}{x}$	15 22
03	STO 1	23 01
04	STO 2	23 02
05	g $\frac{1}{x}$	15 22
06	STO 5	23 05
07	1	01
08	STO + 7	23 51 07
09	RCL 6	24 06
10	RCL 5	24 05
11	f x=y	14 71
12	GTO 19	13 19
13	f x<y	14 41
14	GTO 19	13 19
15	RCL 1	24 01
16	RCL 2	24 02
17	+	51
18	GTO 04	13 04
19	RCL 7	24 07
20	1	01
21	–	41
22	STO 4	23 04
23	RCL 1	24 01
24	X	61
25	g $\frac{1}{x}$	15 22
26	STO 3	23 03
27	RCL 6	24 06
28	–	41
29	RCL 6	24 06
30	RCL 5	24 05
31	–	41
32	f x<y	14 41
33	GTO 40	13 40
34	0	00
35	STO 7	23 07
36	RCL 4	24 04
37	R/S	74
38	RCL 3	24 03
39	GTO 00	13 00
40	RCL 7	24 07
41	R/S	74
42	0	00
43	STO 7	23 07
44	RCL 5	24 05

MEMORY REGISTERS

*	M 0 — R	(resistance)
	M 1 — $\frac{1}{R}$	working register
	M 2 — $\frac{1}{R_n}$	incremented working register
	M 3 — R_T at n-1	working register
	M 4 — n-1	working register	ter
	M 5 — R_T at n	incremented working register
*	M 6 — R_T	(total resistance desired)
	M 7 — n	incremented working register

STEP	INSTRUCTION	INPUT	KEY	OUTPUT
1	Key in program			
2	Store resistance	R	STO 0	
3	Store total resistance desired	R_T	STO 6	
4	Run program		f PGRM	
			R/S	n or n-1 whichever gives R_T closest to R_T desired.
5	Run again		R/S	R_T actual at n or n-1.
6	Values can be changed after any run, but, note well, the R/S button is pressed twice to complete one run			
7	If differences between R_T's at n and n-1 are equal, program opts for n-1, i.e., the least number of resistors			
8	Can add Swr Tag to program to compute swr caused by the use of R_T actual instead of the ideal R_T desired if appropriate.			

	STEP	KEY	CODE
Change	39 to GTO 45		13 45
Add	45	R/S	74
	46	RCL 6	24 06
	47	f x≥y	14 51
	48	x≷y	21
	49	÷	71

STEP	INSTRUCTION	INPUT	KEY	OUTPUT
9	To execute Swr Tag, press R/S again after keying in step additions and changes		R/S	Swr Ratio

Program 3. $R_T = 1/[(1/R_1) + (1/R_2) + \ldots + (1/R_{n-1}) + (1/R_n)]$, where $R_1 = R_2 = \ldots = R_{n-1} = R_n$, given R and desired R_T, to find n (and R_{T_n}) or n-1 (and $R_{T_{n-1}}$), whichever is closest to R_T desired.

STEP	KEY	CODE
01	RCL 0	24 00
02	RCL 1	24 01
03	+	51
04	STO 2	23 02
05	f Pause	14 74
06	RCL 0	24 00
07	X	61
08	RCL 2	24 02
09	RCL 0	24 00
10	–	41
11	÷	71
12	STO 3	24 03
13	f Pause	14 74
14	f Pause	14 74
15	f Pause	14 74
16	RCL 4	24 04
17	$g\ x \neq 0$	15 61
18	GTO 28	13 28
19	RCL 2	24 02
20	GTO 02	13 02
21	RCL 2	24 02
22	R/S	74
23	RCL 3	24 03
24	R/S	74
25	GTO 16	13 16
26	1	01
27	STO 4	23 04
28	RCL 2	24 02
29	RCL 1	24 01
30	–	41
31	GTO 04	13 04
32	0	00
33	STO 4	23 04
34	GTO 19	13 19

MEMORY AD

MEMORY REGISTER

- * M 0 – R_t (total resistance)
- * M 1 – Δ (incremental change in resistance)
- M 2 – R_2 incremented working register
- M 3 – R_1 incremented working register
- M 4 – direction flag
  - forward = 0
  - reverse = 1
- M 5 – FREE
- M 6 – FREE
- M 7 – FREE

STEP	INSTRUCTION	INPUT	KEY	OUTPUT
1	Key in program			
2	Store desired total resistance	R_t	STO 0	
3	Store incremental change	Δ	STO 1 f PRGM	
4	Run program. Display will pause on R_2 for 1 blink, then pause on R_1 for 3 blinks.		R/S	(R_2) (R_1)
5	Stop program run on 3 blinks. If want to hold the values just seen (i.e., see them again without running program), key in		GTO 2 1	
6	Push run and will hold R_2 until Step 7		R/S	R_2
7	Push run again and will hold R_1 until decide on Step 8 or Step 9		R/S	R_1
8	If decide R_2 to increment up once more, go to Step 4			
9	If decide R_2 to increment backwards (over values just seen), Press and Run		GTO 2 6 R/S	incremented backwards (R_2) (R_1)
10	Can hold while counting backwards by going to Step 5. If want to continue going backwards after hold, push Run again after Step 7		R/S	
11	Can turn around and count up again by stopping run, pressing and going to Step 4		R/S GTO 3 2	
12	Can change value of Δ at any time by entering new value after stopping run and going to Step 4 or Step 9	new Δ	R/S STO 1	
13	If desire not to start count from R_t but rather from a higher value, enter value in display, push and go to Step 4		GTO 0 4	
14	Do not run backwards to point where R_2 is smaller than R_t			

Program 4. A controlled endless loop program that runs through the possible resistor parallel combinations that give the desired total resistance. $R_1 = R_tR_2/(R_2 - R_t)$, where $R_t < R_1$ and $R_t < R_2$, given only R_t and Δ (delta — incremental change in R_2 for every run) but not given R_1 or R_2.

you and read the programming steps (just the steps, one after the other, sequentially) into the mike. Now, note the marking on the tape counter at the beginning, file it, and you're ready at a moment's notice to load the program. With practice, you can load a 49-stepper in under a minute (two at the outside, if you're not used to doing it).

Last but not least, has anyone figured out an easy way of doing problems of this nature on a slide rule? No, don't laugh! I don't own one of those little calculators yet, but I must admit to constantly trucking on down to my friend's house with an armload of problems and a pocketful of programs on assorted cassette tapes! ■

STEP	KEY	CODE
01	RCL 0	24 00
02	RCL 1	24 01
03	X	61
04	RCL 1	24 01
05	RCL 0	24 00
06	–	41
07	÷	71
08	STO 2	23 02

MEMORY REGISTER

- * M 0 – R_t (total resistance)
- * M 1 – R_2 (one of parallel resistances)
- M 2 – R_1 (calculated value of second resistance)
- M 3 – FREE
- M 4 – FREE
- M 5 – FREE
- M 6 – FREE
- M 7 – FREE

STEP	INSTRUCTION	INPUT	KEY	OUTPUT
1	Key in program			
2	Store total resistance	R_t	STO 0	
3	Store value of one of parallel resistances	R_2	STO 1 f PRGM	
4	Run program		R/S	R_1
5	Can change R_t and/or R_2 at the end of any run			

Program 5. $R_1 = R_tR_2/(R_2 - R_t)$, where $R_t < R_1$ and $R_t < R_2$, given R_t and R_2, to find R_1.

George Young WB6JYK
Sierra High School
Tollhouse CA 93667

At Last! An RFI-free Computer!

—report on the Cromemco Z-2

I volunteered to put together a Cromemco Z-2 for the express purpose of doing a review of it for *73*. I picked up the unit one day from Mike Sannes at the Byte Shop in Fresno. The unit was ready to go back down the hill to Mike the next afternoon. That should tell you something about how it went together.

The Cromemco Z-2 is a computer system. The portion of the system that I assembled would be called the mainframe. The mainframe of a computer is the power supply, the mother board (a bus in which all the plug-in cards plug into sockets), and the cabinet that houses these assemblies.

When you pick up the boxes (there are two — the power transformer is in a separate box), your first thought is going to be, "How am I going to get that big box into the car?" It is big, but it will go in. Don't drop the small box on your toes; you won't hurt the transformer very much, but you will have a very sore, or broken, foot.

One way to get an idea of the value of a product is to note how it is packed by the manufacturer. The more the manufacturer thinks of his product, the better he packs it for shipment. When you open the big box, you are going to find a smaller box inside floating on styrofoam. You get your first inkling of the quality that is coming at this point. Not only does this manufacturer think a lot of his product, but he has gone to no little effort to see that when you get it, it will still be in the same condition that it was when it left the factory. Everything is wrapped and protected from *everything* and *everybody*.

I have an area about 4 feet by 6 feet that I use to shoot photos on. I had difficulty getting everything into this area, in order to get a shot of the kit contents. The photo doesn't really do the kit contents justice. Everything is big and heavy — heavy, thick aluminum panels, rails, and side panels. No wonder the big box is so heavy.

When you open the power transformer box and fish the rascal out of the packing in that box, you are going to see quite a power transformer — 600 Watts of iron!

Assembly starts with the construction of the power supply on the rear panel. The machine work is superb. Everything fits. The manual is not Heathkit style, but it is good and very easy to follow. You can do the whole thing if you can read and follow directions, even though nobody tells you what a KEP nut is. (It's a nut that has a serrated lock washer attached to it. I figured this out, so you should be able to, also.)

The mother board is assembled next. Cromemco calls this a Blitz Buss and it's really neat. They just barely etched the board. Almost all the copper is still on the board. This places a shield around every interconnector on the bus system, and it is probably why their computer can run at 4 MHz without problems. However, because they removed the bare minimum of copper from the circuit board, you will get to see just how well you really can solder. I think you'll find out that it presents a real challenge. Use a heat-con-

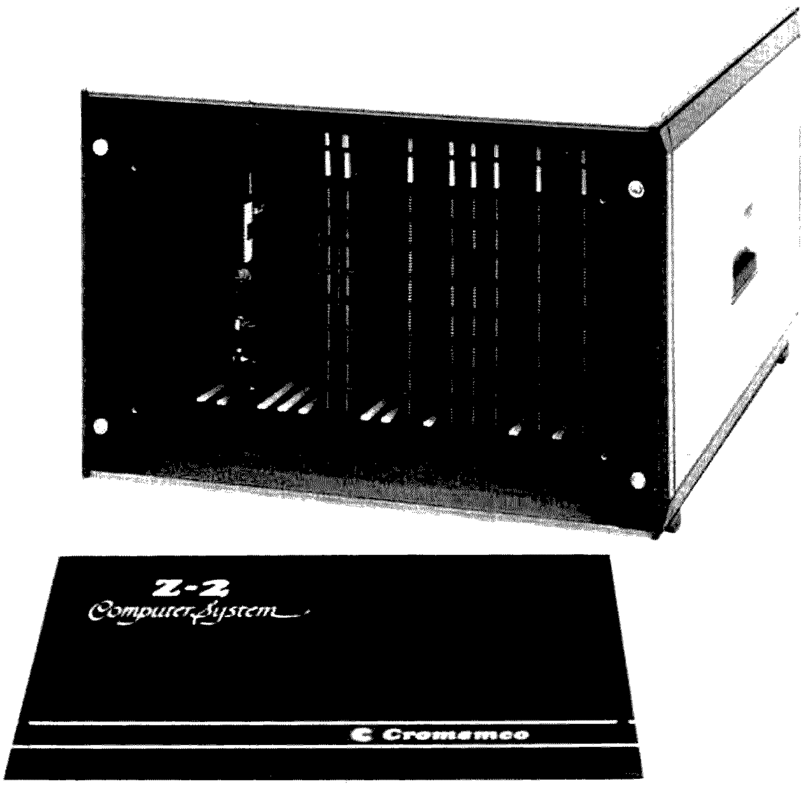

The completed Z-2. Photo courtesy of Cromemco.

trolled iron with a small point, and do the job very carefully. The manual suggests ohmmeter tests after every solder connection. I used the Squawker ("Kilobaud Klassroom," *Kilobaud*, October, 1977, p. 70). It's much faster for this purpose than an ohmmeter.

One thing that probably should be mentioned here is computers and RFI. The digital logic circuits in computers use lots of fast square wave pulses. Square waves are *very* rich in harmonic content. Keeping this radiation under control is of primary concern to hams. The Blitz Buss and the tightly enclosed metal box go a long way toward containing this potential source of RFI.

Cromemco goes even one step farther in this respect. A very substantial line filter is "bonded" into the system to keep the potential RFI inside the metal box and off the ac lines. Cheers to Cromemco for this foresight!

Assembly

Assembly proceeded smoothly, with the metalwork sliding together as if it had silicone lube on it. I like quality workmanship. At this point, the assembled mainframe looks like something you find only in the military. The cabinet work is extremely rugged and good-looking.

Now it's time for the initial tests. Everything is okay so far. But where's the line cord? I don't even remember seeing it. It's not listed in the parts list, either, that I can find. This has to be an oversight. Nobody would put out this kind of quality and leave out a line cord. But the line cord off my spouse's comptometer fit, and the power supply checked out.

The mainframe is all assembled now. Another test of a product is how it looks after it is assembled. Does it really look like the photos in the ads? This one does. In fact, the real thing looks even better than the ads.

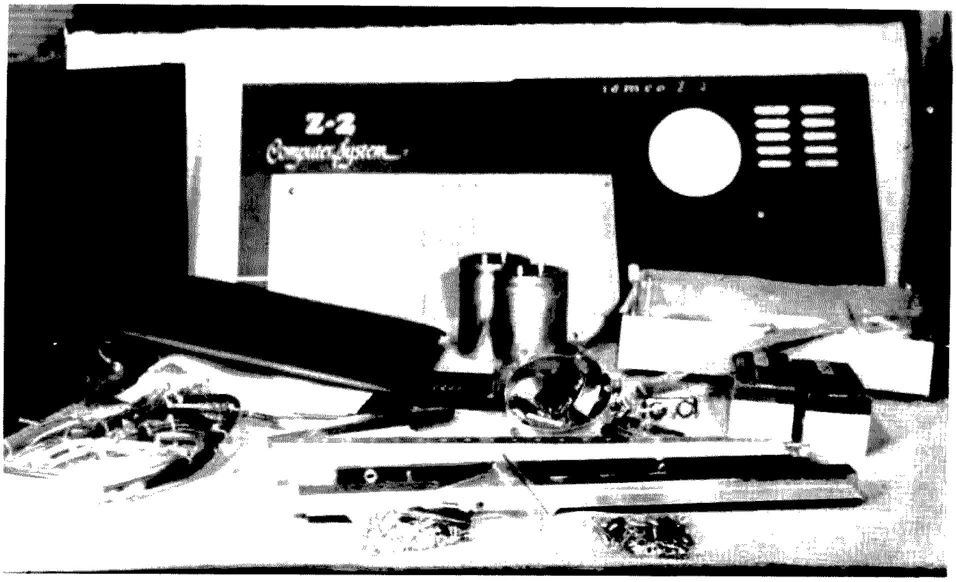

The kit contents unpacked.

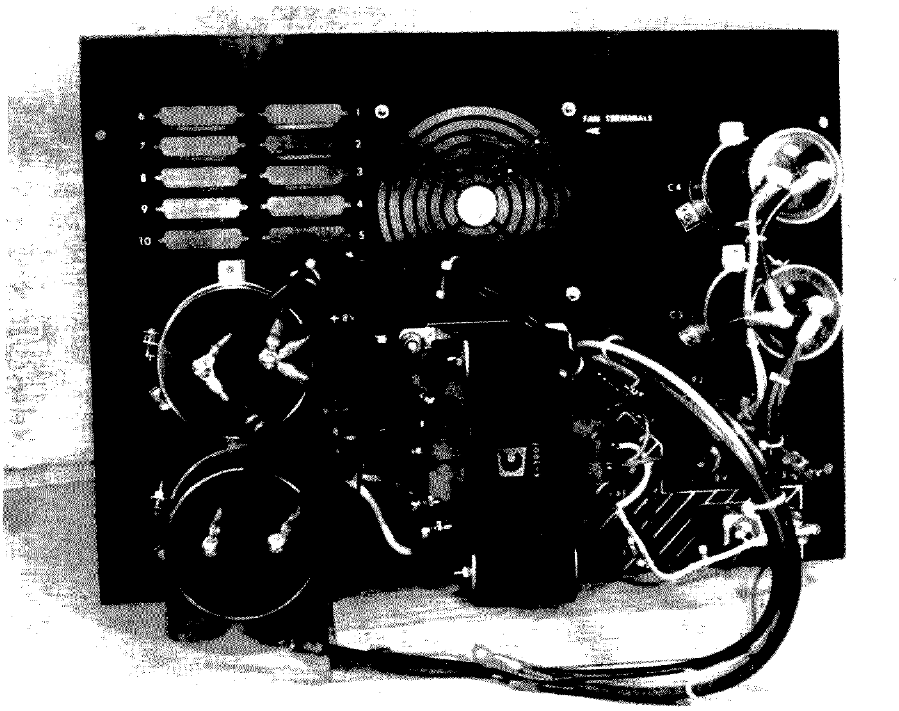

The completed power supply on the rear panel.

The processor board is next. The manual says it's an evening's work. Either I got lucky, or the manual is wrong, because 2½ hours later the board was complete. Again, your soldering skills will be taxed. Things are really compact on the board, but, with reasonable care, the job can be done. There was only one problem here – one IC has no markings on it. When all the ICs are inserted in their sockets (everything is socketed), the empty one is 7400.

How Does It Work?

Darned if I know. When you only have a mainframe and a processor board, you are a long way from having a computer. You still need memory, you need an input device, and you need an output device. This is what is meant by a computer system. What we have here is a beautiful and rugged cabinet, a very husky power supply, and a microprocessor board. This is the foundation upon which to build your system.

I sometimes wish that I wasn't such a die-hard home brewer, because this would be the foundation that I'd use to build my system. ■

Another Approach To the ASCII/Baudot Headache

—marriage between a Model 15 and an SWTP system

Garry O. Caudell K4HBG
3125 Robin Lynn
Ashland KY 41101

One Saturday afternoon, my friend Doug WA4ZVI and I were on 52 doing some "microprocessoring." We normally get off the local repeater for this, since we tend to get carried away and bore our local hams to death when we get off on computing.

Doug and I have nearly identical systems for information exchange purposes (SWTPC 6800, CT-1024, KC Standard tapes, Model 15 hard copy).

We had just received the latest SWTPC program (co-resident editor assembler) and we were trying to figure out how to patch the program to give hard copy on our old Model 15 Teletypes (ham radio compatible).

Southwest Technical had given us some places to look, but it turned out that they were largely in error.

After we spent quite a considerable time dumping program listings and searching

Fig. 1. Search program.

```
                                NAM    SEARCH
      2000                      ORG    $2000
                                OPT    0
                          'THIS PROGRAM SEARCHES ANY BLOCK OF MEMORY
                          'FOR A TWO BYTE STRING
                          'STARTING AND STOPPING ADDRESSES ARE ENTERED
                          'FROM THE KEYBOARD'" G.O. CAUDELL JUN 77
            E0            BADDR   EQU    $E047
            E0            OUTS    EQU    $E0GC
            E0            OUT4HS  EQU    $E0C8
            E0            PDATA1  EQU    $E07E
            A0            ASTART  EQU    $A002
            A0            ASTOP   EQU    $A004
            A0            ASEARC  EQU    $A000
            A0            PADDR   EQU    $A006
            A0            ASTRNG  EQU    $A000
      2000  CE    204E    SEARCH  LDX    £PSTART
      2003  BD    E07E            JSR    PDATA1      'PRINT START MESSAGE
      2006  BD    E047            JSR    BADDR       GET START ADDRESS
      2009  FF    A002            STX    ASTART      STORE START ADDRESS
      200C  CE    2055            LDX    £PSTOP      PRINT STOP MESSAGE
      200F  BD    E07E            JSR    PDATA1
      2012  BD    E047            JSR    BADDR
      2015  FF    A004            STX    ASTOP       STORE STOP ADDRESS
      2018  CE    205B    NEXT    LDX    £PSEARCH
      201B  BD    E07E            JSR    PDATA1      SEARCH FOR MESSAGE
      201E  BD    E047            JSR    BADDR       GET TWO BYTE STRING
      2021  FF    A000            STX    ASTRNG      STORE STRING
      2024  FE    A002            LDX    ASTART
      2027  A6    00      REPEAT  LDA A  0,X         GET CHARACTER
      2029  B1    A000            CMP A  ASTRNG
      202C  26    16              BNE    TESTX
      202E  A6    01              LDA A  1,X
      2030  B1    A001            CMP A  ASTRNG+1
      2033  26    0F              BNE    TESTX
      2035  FF    A006            STX    PADDR       STORE PRESENT ADDRESS
      2038  CE    A006            LDX    £PADDR      PRINT PRESENT ADDRESS
      203B  BD    E0CC            JSR    OUTS
```

```
                                    NAM    PATCH
                            'THIS PATCHES THE SWTPC CO-RESIDENT
                            'EDITOR/ASSEMBLER FOR HARD COPY ON
                            'BAUDOT TELETYPE
                            'G O CAUDELL     JUNE 77
00FE                                ORG    $00FE
00FE    1C                          FCB    $1C,$80      MAKE ROOM FOR CONVERSION
00FF    80
17A2                                ORG    $17A2
17A2    BD    1BF0                  JSR    $1BF0        BAUDOT INITIATE
17A5    01                          FCB    $01,$01,$01,$01,$01,$01,$01,$01
17A6    01
17A7    01
17A8    01
17A9    01
17AA    01
17AB    01
17AC    01
1A83                                ORG    $1A83
1A83    7E    1BFE                  JMP    $1BFE        BAUDOT OUTEEE
                                    END
TOTAL ERRORS 00000
```

Fig. 2. Patch program.

through with Mikbug,* we were not getting anywhere. It occurred to me that we should be making our computers do at least some of this work for us.

*Mikbug is a registered trademark of Motorola.

About this time, Doug had to go off and do some chores, so I proceeded to write a search program (see Fig. 1).

Although I would really like to have a search program that searches for any length string, I decided to write a simple search program that would search for a two-byte string. Once I got that working, I would complicate it later.

As it turned out, the simple program worked so well that I never saw fit to add to it. It first asks for a starting address, then a stop address, and then what to search for. Response is almost instantaneous for my 12K of memory. All addresses at which the string appears are displayed (don't clear memory and then ask for 0000 unless you have a lot of time). It will then ask you what to search for with the same memory limits as before. In fact, if you want to look at an area of memory, type a non-hexadecimal character when it asks what to search for and you will go to Mikbug (I find an M appropriate). Examine memory with Mikbug, and then you can return to the search program without having to set new limits simply by typing G.

Armed with the above, things started falling out right and left. To prove it works, I am including the patch for the co-resident editor assembler. Both of these programs were listed on the Model 15 Teletype.

The Teletype acts the same as SWTPC intended the PR-40 to work. That is, the Teletype only works after a "Print" command.

The hardest thing to find was the $00FE location, which is the top of the SWTPC program. By changing this location, it makes room for my Baudot/ASCII and allows the entire program to be one block ($0000-$1C7F). See Fig. 2. ■

```
203E    BD    E0C8            JSR    OUT4HS
2041    FE    A006            LDX    PADDR     RESTORE PRESENT ADDRESS
2044    BC    A004    TESTX   CPX    ASTOP
2047    27    03              BEQ    DONE
2049    08                    INX
204A    20    DB              BRA    REPEAT
204C    20    CA      DONE    BRA    NEXT
204E    53            PSTART  FCC    /START /
204F    54
2050    41
2051    52
2052    54
2053    20
2054    04                    FCB    $04
2055    53            PSTOP   FCC    /STOP   /
2057    4F
2058    50
2059    20
205A    04                    FCB    $04
205B    0D            PSEARC  FCB    $0D,$0A
205C    0A
205D    53                    FCC    /SEARCH FOR /
205E    45
205F    41
2060    52
2061    43
2062    48
2063    20
2064    46
2065    4F
2066    52
2067    20
2068    04                    FCB    $04
A048                          ORG    $A048
A048    20                    FCB    $20, 00
A049    00
                              END

TOTAL ERRORS 00000
```

Al Gerbens K7SBK
1038 E. 6th Place
Mesa AZ 85203

Programming Coil Design

—*at last . . .* *a use for computers!*

The next time you're faced with winding a small coil needed to add inductance to your pet project, why not put your microcomputer to work as an assistant? Make sure your BASIC interpreter is resident, and then load the coil design program described here. Sit back and start designing single layer, close-wound coils, using enameled copper (magnet) wire.

Program Execution

Let's work our way through a typical run, and I think you'll wind up (pun) agreeing it's a pretty useful design tool.

Inductance or Reactance?

The designing of a coil begins with a need for a specific quantity of inductive reactance. This program will accept either required inductance in microhenrys or required inductive reactance at a specified frequency. If you select the latter, then the program simply calculates the inductance in microhenrys, which will result in the reactance you require.

Coil Form

Next you're asked to select a coil form. Composition resistor bodies are excellent small coil forms, with consistent diameters and a built-in set of leads to solder to. Coil form options, therefore, include 1/4, 1/2, one and two Watt resistor bodies, as well as a fifth option called "other form." Select it and you can enter the diameter of any form you intend using. Incidentally, if you choose a resistor body as the coil form, keep the value of the resistor as high as possible.

Wire Size

Now enter wire size in gauge. The program handles any wire size from 12 to 40 gauge. The section of the program which handles the gauge to diameter conversion is easily modified to expand or reduce capability. The diameter of the wire obtained from the appropriate "If-Then" statement determines the number of close-wound turns of wire per inch of coil length.

Design Output

Your computer now performs a few mathematical manipulations and outputs:
1. A recap of wire size for your information.
2. The diameter of the coil form in inches (even if you chose a resistor body as a form).
3. The number of turns of wire required to yield the desired inductance.
4. The length of the single close-wound layer of turns in inches.
5. The length to diameter ratio.
6. Any recommendations which are appropriate.

If the length to diameter ratio is less than one or greater than ten, you will receive an error message, recommending a change in either wire size or coil form diameter. If the coil is too long to fit on the body of a resistor you have selected, then this information will be displayed at this time. You're then asked if you would like to select another coil form and/or wire size combination.

Program Discussion

I thought about incorporating a recommendation for wire size and form diameter to yield an optimum length to diameter ratio. This is certainly possible, and you may want to try it. Most people won't have the large selection of wire sizes or even standard-size coil forms required to implement the recommendations. Therefore, I left the wire size and form diameter inputs up to the operator. Look at line sixty-eight. The variable H represents the required inductance in microhenrys. This is increased by twenty-five percent in line sixty-eight. If you find that the coils wound using this program yield a relatively high inductance, just change line sixty-eight to read, perhaps:

H = 1.15 * H,

and vice versa for the other way around.

In line eighty-six, note the function ASC (string name). This returns the ASCII code of the first character in the specified string. In our case, the string is only one character long, and, if A$ is equal to A, then T will be set equal to 65. If you don't have this function, simply delete lines 86, 88, and 90, as they represent only a check to assure validity of the input in line 84.

System Requirements

The program occupies approximately 2.5K of RAM, not counting the BASIC interpreter. I have it running on an 18K, Z-80 Digital Group system, with thirty-two characters per line video display. The latter is the reason for line twenty-six, which is just a loop to allow time to read the scrolled presentation.

Potential Changes

How about altering this program to allow the operator to input the coil forms and wire sizes he has available, and let the computer

output the best combination? It is also quite possible to expand the program to include "non-close-wound" coils by inputting turns-per-inch information. If you try this, watch out for that multiplier in line sixty-eight. It's probably too big.

This program will allow you to quickly optimize coil specifications using your microcomputer. It additionally incorporates readily available resistor bodies as coil form options. Even if you're not into home brewing equipment, I think you'll enjoy trying and expanding on this application of a microcomputer. ■

References

[1] *Mark's Mechanical Engineering Handbook*, 6th Edition, McGraw-Hill Publishers.

[2] "Graphical Coil Winding Aid," E.E. Palmer, *Ham Radio Magazine*, April, 1977.

PROGRAM LISTING

```
#= PRINT

10  FOR X=1 to 16:#"":NEXT
12  #"       SMALL COIL DESIGN"
14  #"":#"PROGRAM LIMITATIONS:"
16  #" 100 MICROHENRIES MAX. INDUCT."
18  #" WIRE SIZE 12 GAGE MAX."
20  #"              40 GAGE MIN."
22  #" RESISTORS USED AS FORMS MUST"
24  #" BE COMPOSITION TYPE."
26  FOR X=1 TO 1500:NEXT
28  #"":#""
30  GOSUB 254
32  #"WANT TO START WITH: ":#""
34  #" 1-REQUIRED INDUCTANCE"
36  #" 2-REQUIRED INDUCTIVE REACTANCE"
38  INPUT C
40  GOSUB 254
42  IF C=1 THEN 62
44  IF C>2 THEN 38: IF C<0 THEN 38
46  INPUT"WHAT IS THE DESIRED INDUCTIVE
    REACTANCE IN OHMS",I
48  INPUT"WHAT FREQ. IN MHZ. ",F
50  H=I/(2*3.14159*F)
52  #"REQUIRED INDUCT.= ";H
54  #"MICROHENRIES": IF H>100 THEN
    #"100 MICRO-H MAX. PLEASE REENT
    ER" ELSE GOTO 68
56  GOTO 46
58  FOR X=1 TO 16:#"":NEXT
60  GOSUB 254
62  INPUT"WHAT IS THE DESIRED COI
    L INDUCTANCE IN MICROHENRIES?",H
64  IF H>100 THEN #" 100 MICRO-H MAX.
    PLEASE REENTER" ELSE 68
66  GOTO 62
68  H=1.25*H
70  GOSUB 254
72  #"SELECT COIL FORM"
74  #"    A- 1/4 W RESISTOR"
76  #"    B- 1/2 W RESISTOR"
78  #"    C- 1   W RESISTOR"
80  #"    D- 2   W RESISTOR"
82  #"    E- OTHER FORM"
84  INPUT"?",A$
86  T=ASC(A$)
88  IF T<65 THEN 84
90  IF T>69 THEN 84
92  IF A$="A" THEN D=.090
94  IF A$="B" THEN D=.140
96  IF A$="C" THEN D=.220
98  IF A$="D" THEN D=.312
100  IF A$="E" THEN 102 ELSE 110
102  #"WHAT IS THE DIAMETER OF THE"
104  #"COIL IN INCHES?"
106  #"": INPUT"?",D
108  GOSUB 254
110 INPUT "WHAT GAGE ENAMELED WIRE
    IS TO BE USED?",G
112  IF G=12 THEN W=.081
114  IF G=13 THEN W=.072
116  IF G=14 THEN W=.064
118  IF G=15 THEN W=.057
120  IF G=16 THEN W=.051
```

```
122  IF G=17 THEN W=.045
124  IF G=18 THEN W=.040
126  IF G=19 THEN W=.036
128  IF G=20 THEN W=.032
130  IF G=21 THEN W=.0285
132  IF G=22 THEN W=.0253
134  IF G=23 THEN W=.0226
136  IF G=24 THEN W=.0201
138  IF G=25 THEN W=.0179
140  IF G=26 THEN W=.0159
142  IF G=27 THEN W=.0142
144  IF G=28 THEN W=.0126
146  IF G=29 THEN W=.0113
148  IF G=30 THEN W=.01
150  IF G=31 THEN W=.0089
152  IF G=32 THEN W=.008
154  IF G=33 THEN W=.0071
156  IF G=34 THEN W=.0063
158  IF G=35 THEN W=.0056
160  IF G=36 THEN W=.005
162  IF G=37 THEN W=.0045
164  IF G=38 THEN W=.004
166  IF G=39 THEN W=.0035
168  IF G=40 THEN W=.0031
170  IF G<12 THEN 110
172  IF G>40 THEN 110
174  N=((40*H*W)+SQRT(((4*H*W)*(4
     *H*W))+(4*D*D*D*18*H)))/(2*D*D)
176  N1=((40*H*W)-SQRT(((4*H*W)*(4
        *H*W))+(4*D*D*D*18*H)))/(2*D*D)
178  IF N>N1 THEN N2=N ELSE N2=N1
180  N2=(INT(N2*10))/10
182  FOR X=1 TO 14:#"":NEXT
184  GOSUB 254
186  #"WIRE SIZE = ";G;" GAGE"
188  #"COIL DIA. = ";D;" INCHES"
190  #"NUMBER OF TURNS = ";N2
192  #"COIL LENGTH = ";(INT(N2*W*100))
     /100;" INCHES"
194  R=INT(N2*W*100/D)/100
196  IF A$="A" THEN 242
198  IF A$="B"  THEN 246
200  IF A$="C" THEN 248
202  IF A$="D" THEN 250
204  #"THE LENGTH TO DIA. RATIO IS"
206  #R
208  IF R<1 THEN GOSUB 228
210  IF R>10 THEN GOSUB 236
212  FOR X=1 TO 5:#"":NEXT
214  GOSUB 254
216  INPUT"SELECT ANOTHER FORM?
     (Y OR N)",C$
218  IF C$="y" THEN 70
220 INPUT "DESIGN ANOTHER COIL?
    (Y OR N),B$
222  IF B$="Y" THEN 30
224  #"PROGRAM TERMINATED"
226  END
228  #"RECOMMEND THAT YOU USE EITHER"
230  #"LARGER WIRE OR A SMALLER COIL"
232  #"FORM."
234  RETURN
236  #"RECOMMENDED THAT USE SMALLER WIRE"
238  #"OR A LARGER COIL FORM."
240  RETURN
242  IF N2*W>.250 THEN #"COIL TOO LONG
     FOR 1/4 W FORM" ELSE GOTO 201
244  GOTO 214
246  IF N2*W>.385 THEN #"COIL TOO LONG
     FOR 1/2 W FORM" ELSE GOTO 204:
     GOTO 214
248  IF N2*W>.567 THEN #"COIL TOO LONG
     FOR 1 W FORM" ELSE GOTO 204:
     GOTO 214
```

```
250  IF N2*W>.678 THEN #"COIL TOO LONG
     FOR 2 W FORM" ELSE GOTO 204:
     GOTO 214
252  GOTO 214
254  #"-------------------------------"
256 RETURN
RUN

                SMALL COIL DESIGN
PROGRAM LIMITATIONS:
 100 MICHOHENRIES MAX. INDUCT.
 WIRE SIZE     12 GAGE MAX.
               40 GAGE MIN.
 RESISTORS USED AS FORMS MUST
 BE COMPOSITION TYPE


--------------------------------

WANT TO START WITH:
     1- REQUIRED INDUCTANCE
     2- REQUIRED INDUCTIVE REACTANCE
? 2

------------------------------
WHAT IS THE DESIRED INDUCTIVE RE
ACTANCE IN OHMS  1500
WHAT FREQ. IN MHZ 14.230
REQUIRED INDUCT.=16.776712
MICROHENRIES
------------------------------
SELECT COIL FORM
   A- 1/4 W RESISTOR
   B- 1/2 W RESISTOR
   C- 1   W RESISTOR
   D- 2   W RESISTOR
   E- OTHER FORM

?_B

WHAT GAGE ENAMELED WIRE IS TO
BE USED? 30
-------------------------------

WIRE SIZE = 30
COIL DIA. = .14 INCHES
NUMBER OF TURNS = 270.1
COIL LENGTH = 2.70 INCHES
COIL TOO LONG FOR 1/2 W FORM
-------------------------------
SELECT ANOTHER FORM? (Y OR N) Y
SELECT COIL FORM
   A- 1/4 W RESISTOR
   B- 1/2 W RESISTOR
   C- 1   W RESISTOR
   D- 2   W RESISTOR
   E- OTHER FORM
?E
WHAT IS THE DIAMETER OF THE
COIL IN INCHES?
?1.5

WHAT GAGE ENAMELED WIRE IS TO BE
USED ? 30

WIRE SIZE = 30 GAGE
COIL DIA. = 1.5 INCHES
NUMBER OF TURNS =  17.7
COIL LENGTH = .17 INCHES
THE LENGTH TO DIA. RATIO  IS
.1 1
RECOMMEND THAT YOU USE EITHER
LARGER WIRE OR A SMALLER COIL
FORM.
------------------------------
SELECT ANOTHER FORM? (Y OR N) Y
------------------------------

SELECT COIL FORM
   A- 1/4 W RESISTOR
   B- 1/2 W RESISTOR
```

```
C- 1   W RESISTOR
D- 2   W RESISTOR
E- OTHER FORM
?D
WHAT GAGE ENAMELED WIRE I S TO BE
USED? 32
-----------------------------
WIRE SIZE = 32 GAGE
COIL DIA. = .312 INCHES
NUMBER OF TURNS = 69.4
COIL LENGTH = .55 INCHES
THE LENGTH TO DIA. RATIO IS
1.77
------------------------------
SELECT ANOTHER FORM? (Y OR N) N
DESIGN ANOTHER COIL? (Y OR N) N
PROGRAM TERMINATED
READY
```

Keith R. Smith WA6JSF
4590 Ensenada Drive
Woodland Hills CA 91364

Outstanding Computer Bargain Exposed

—a novice builds the BYT-8

Have you seen the BYT-8 on display in the Byte Shops? This little machine, with its rather plain black and beige aluminum cabinet with wraparound top, is not much larger than a portable typewriter case, measuring approximately 15" wide, 7" high, and 11" deep. Inside it contains a 10-slot, S-100 bus mother board and has a 10 Amp power supply (+8 V dc, ±18 V dc) and an MWRITE logic circuit. It uses an optionally provided fan. The front panel is uncluttered, having a start/restart switch and an LED to indicate that the power is on. The power master switch is located on the back panel to lessen the temptation of curious switch flippers who may visit the computer room.

At first glance the kit appears simple, so putting it together should be a snap, even for the novice. However, the manner in which the assembly instructions are written makes it more of a challenge. If you can spare the time, I'll tell you all about it.

My BYT-8 is the first of several building projects which I hope will provide me with a fully-operational home computing system in the near future. I must point out that I have not yet accumulated all the components necessary to get it operational, so that, at this point, it hasn't been fully tested. Therefore, all the comments made here relate strictly to my experience in selecting and building the mainframe assembly.

I was attracted to the BYT-8 initially because of its compactness and apparent simplicity. It affords one the opportunity to get started in this new hobby in a modular way without a large initial capital outlay. It also gave me some time to study various optional paths I might take while getting my feet wet in kit-building activity. Once I had taken the initial plunge, I was reasonably certain I would pursue the activity until I had a complete system. That first commitment, for me, was a difficult hurdle to overcome.

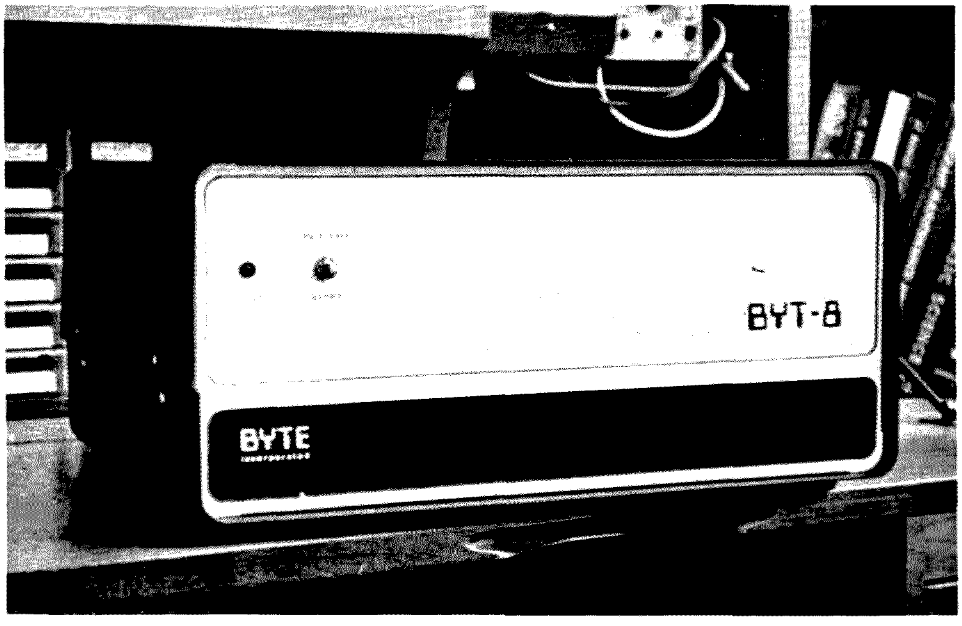

Photo A. BYT-8 cabinet. It's not fancy, but it's functional and nicely sized for tabletop operation.

The First Steps

Before making my initial selection, I suppose I did the normal amount of agonizing over the offerings of the many computer companies which advertise in the popular home computing magazines. I even attended two large home computer shows on the West Coast and hung out at the local computer shops. I joined a computer club at work. I read everything I could get on the subject; little did it matter that I understood only a small part of what I read. In the end I was confused and indecisive,

but I did know lots of buzzwords and could smile and nod knowingly when people spoke of such things as dynamic memories, EPROMs, machine cycles, and the like. By doing some home studying, I even got to know something about BASIC programming. I became aware of BASIC's general capabilities, though I still cannot claim any proficiency in the language. The point of this is that I began to look at the various systems offered in terms of both their hardware and software capabilities.

After considerable soul-searching, I finally narrowed my selection down to equipment offered by The Digital Group, Processor Technology, and Technical Design Laboratories. All of these systems appeared to best meet my basic objectives for a system, both from the standpoint of the hardware and from software availability. In the end, TDL's Z-80 CPU (ZPU), with its S-100 bus compatibility, won out over the others. However, this immediately posed another problem, since, at that time, TDL did not offer a complete package to house their card. I had to seek a solution to that problem.

At this point, I recalled having seen the BYT-8 at a nearby store, and I really became interested in it as a possible part of my system. I wondered if a 10-slot mother board would be large enough to meet my ultimate needs. The arguments of the Byte Shop people convinced me that it would do. I currently envision my initial system as comprised of the Z-80 CPU board supported by the TDL Z-80 monitor board (this contains 2K ROM, 2K RAM, 2 serial and 1 parallel input/output ports, plus a cassette interface). To this I plan to add a 16K memory board and a video interface. This should afford me plenty of expansion room, especially in light of the high-density memory boards which are currently available. Since most boards use one Amp or less per board, the 10-Amp power supply should be sufficient.

Before making the decision to buy the BYT-8, however, I looked at the possibility of purchasing an Imsai mainframe assembly without the front panel. I am convinced that the front panel is not needed for my application and is simply a source of additional trouble. It appeared to be cost-effective to eliminate the front panel if I could. The Imsai sans the front panel would have cost about $70 more than the BYT-8 (priced at $299). Since I had convinced myself that I only needed 10 slots, the larger cabinet and 28-Amp power supply didn't hold much appeal for me. The only other alternative was to pick up a mother board here and a power supply there and find a cabinet somewhere to mount it all in. Since I am new in the hobby, I wanted someone to hold my hand a bit, so I opted for the BYT-8 kit. I slapped down my Mastercharge card and walked out of the Byte Shop with the kit under my arm.

Now the Fun Begins . . .

Once I had the box home, I opened it and began to read the instructions. I was prepared for the worst, since I had heard from others that computer kits are a far cry from Heathkits. At this point I can say they were not exaggerating with respect to the BYT-8. (Since constructing the BYT-8, I have put the TDL ZPU together and found it to be almost Heathkit-like in its approach.) At this point, I want to make it clear that the criticism presented here is aimed principally at helping the novice builder – either directly, by giving him the benefit of my experience, or indirectly, by prompting the manufacturer to improve his assembly instructions to make them easier to follow. Those experienced in this field may feel I am nit-picking, but I feel this is not so. I have thrown out a number of lesser criticisms which I felt were too inconsequential to mention here, but which, in the interest of product improvement, should be considered. The kit manufacturer states early in his instruction manual, "For the most part, our discussion will be aimed at the Intermediate, but we will constantly give references and repeat things for the Neophyte and Novice." At times, the instructions fail to keep this promise. The manual defines five categories of builders, from the neophyte and novice through intermediate, advanced, and expert. By Byte Shop definitions, I should be classified as a novice.

My criticisms fall into two classes – those dealing with hardware design and those relating to documentation. I feel that those in the first class are not of a serious nature, if one is aware of them, and that those in the latter are mainly a nuisance which tends to take some pleasure out of the kit-building experience and could cause those unfamiliar with electronics to blow a few components if they are not careful and observant. The hardware aspects will be

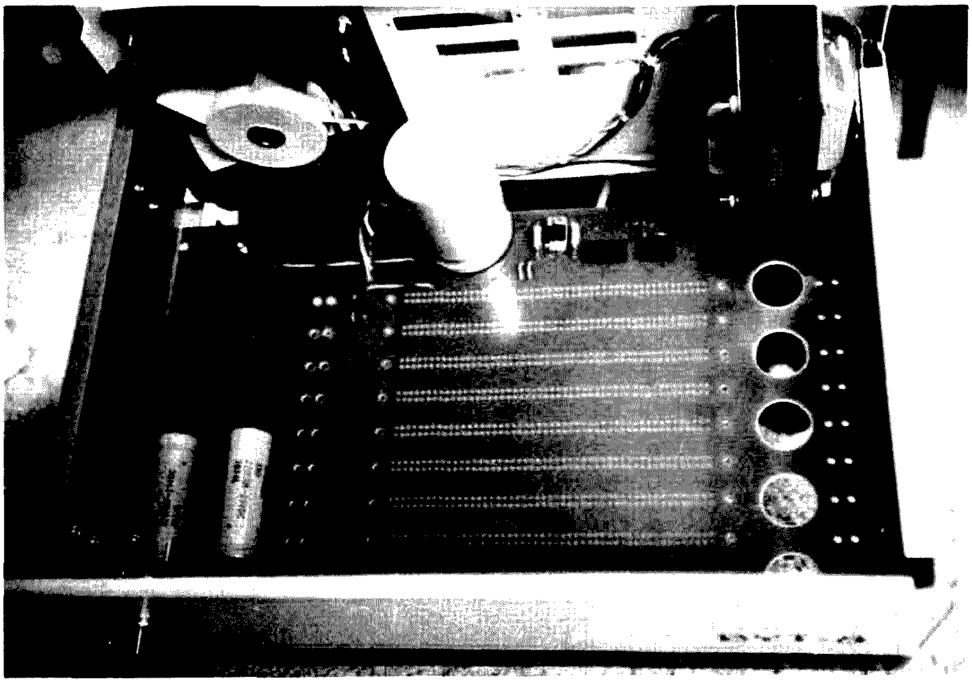

Photo B. BYT-8 top view. This shows the power supply and optional fan. MWRITE circuit consists of the two ICs and the voltage regulator between the power transformer and filter capacitor.

covered first, followed by the documentation deficiencies.

Hardware Shortcomings

The most serious hardware problem results from the manufacturer's recent change to a PC board which is twice as thick as that used in his original design. This change is noted in the errata sheet, where it is stated that the change was made to provide proper board rigidity without the use of supporting struts, since the struts were found to be a source of short circuits to the mother board. While the substitution appears reasonable, the manufacturer has not properly considered the consequences of this decision on the IC sockets provided. The pins on the sockets are too short to penetrate the board far enough for reliable soldering. It is extremely difficult to apply heat to these short pins to assure a good solder joint. Since the traces are on only one side of the board, the holes are not plated through, and solder does not tend to wick up the hole along the socket pins. This condition occurs only in the MWRITE logic portion of the board. If this optional circuit is going to be used, the builder should exercise care here or purchase wire-wrap sockets whose longer pins will easily penetrate the board. The pins on the 100-pin edge connector present no problem, since they are long enough to properly penetrate the board.

However, I should caution that the mother board requires the 100-pin connectors to have a lateral (across-the-connector dimension) pin spacing of 5/32 of an inch. This proved to be rather costly for me, since I found a ready supply of the 1/4-inch dimension connectors for only $3.50 each, but the only 5/32-inch connectors I could acquire cost $7.35 each! (Maybe I should have bought the Imsai! Half of my saving by not buying the Imsai went for the more expensive connectors.)

Apparently, when the new board was manufactured, two errors crept into the design regarding the connections to the power-on LED. The first of these is minor. The pads for the plus voltage supply, obtained through a dropping resistor, were changed to a new location, and the pictorials were not properly updated. The other problem results from neglecting to drill the hole for the LED ground return. This simple operation must be done by the builder.

One other design deficiency relates to the power-on LED. The BYT-8 design solders the two leads of the LED to wires running to the mother board without any terminal strip to provide proper support of the leads. The unsupported leads are subject to damage or shorting whenever one works in the chassis or inserts or removes boards. To eliminate this problem of hanging leads, I installed a two-lug terminal strip on a nearby chassis attach screw. (See Photo D.) This strip is close enough to the LED so that the leads would reach, and no additional holes were required in the chassis. Only one note of caution: One should take care that the solder lugs of the terminal used are not grounded through the terminal's mounting lug, in order to preserve the BYT-8's ground independent of the cabinet.

When it came time to install the top and bottom covers of the cabinet, I discovered that the top was about 1/32 inch too short! The top is a wraparound affair, and the curvature was slightly off, so two of the mounting holes for the attaching screw didn't quite line up with the threaded holes on the chassis side rails. I attempted to fix this condition by reaming the holes out slightly, but this failed to give enough relief to line the screws up with the holes. To have continued on this tack would have required holes too large for the screw heads and would have necessitated the use of large washers. Instead, I elongated the holes on one side, drifting them down and back with a small file. This made the top fit acceptably well, but still, there is a narrow gap along one side.

My final hardware comment is directed to the manufacturer. I recommend strongly that the mother board be solder masked to make it less likely that we novices will bridge the traces when we solder in the bus sockets. Those traces are really very close together!

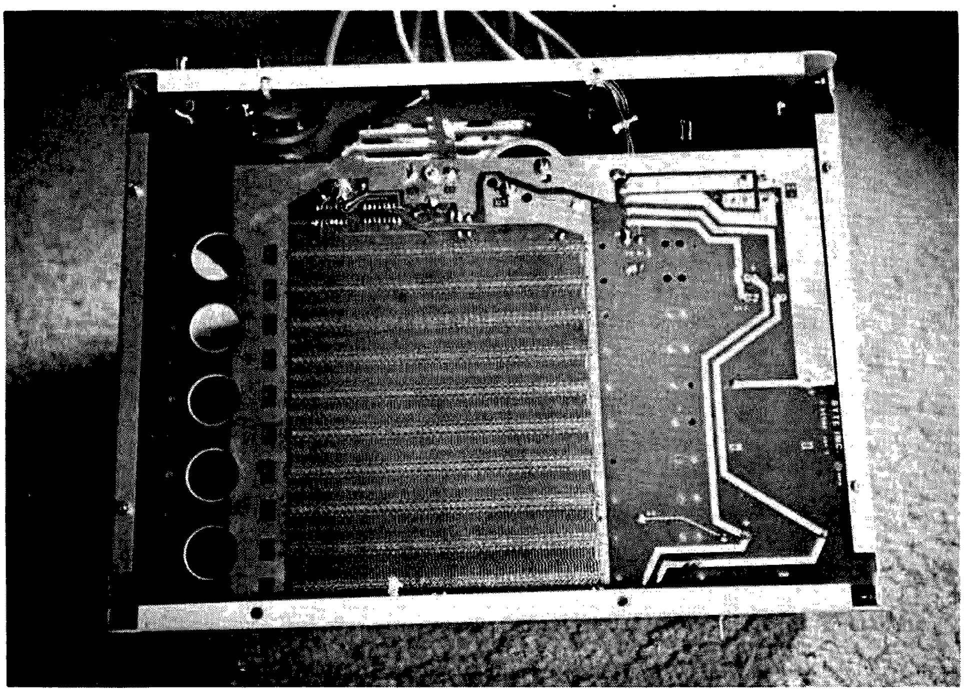

Photo C. BYT-8 chassis — bottom view of mother board.

Software Shortcomings

None of the documentation deficiencies cited below are considered highly critical, but, by being aware of them, the inexperienced builder may avoid time-consuming, if not costly, pitfalls.

The construction notes are contained in an attractive vinyl loose-leaf notebook. Unfortunately, the instructions are somewhat disorganized. The manufacturer should hire a programmer to write the assembly instructions, since programmers should be orderly in their thinking processes and would appreciate the need for logical progression in assembling the kit. The writer of the instructions provided apparently did not put organization very high in his order of priorities. The document contains much irrelevant text

and a number of meaningless photographs and sketches. These and a number of redundancies can be overlooked. However, some of the photographs needed for an understanding of the assembly are of poor quality, and proper highlighting of necessary details has been omitted. For example, the master diagram is a top view photograph of the mother board installed in the cabinet. Most of the components show up well enough in this view, but the jumpers blend into the background and are difficult to see. Small (less than 1/16 inch) labels are penned in, but even these are difficult to see – in some cases, they are black written on dark grey. This is one area that the manufacturer should seriously consider for improvement.

At this point, follow me as I flip through the pages of the instruction manual and point out some of the areas where problems may be avoided. Parenthetical numbers refer to the page numbers in my instruction manual. (Possibly, later editions will have different page numbers and will, hopefully, have clarified these points.)

The assembly instruction section has an overview which lists the steps from unpacking the kit through the final testing (ASI-4). This overview is important, since it is the only place where I found an unambiguous description of the construction steps required to assemble the kit. It was here, for example, that I found that I should have mounted the power transformer to the back panel before I assembled the cabinet. Unfortunately, I hadn't remembered that bit of wisdom at the critical point and proceeded to put the cabinet together first, as later instructions implied. This out-of-step assembly caused only a little difficulty in bolting in the transformer and making the solder connections that otherwise would have been easy. Therefore, I suggest to those building this kit that they take this list of steps out of the book and consult it for each major operation along the way.

Several pages in the overview of the assembly are devoted to explaining the electrical characteristics of a number of the components, such as capacitors, diodes, etc. (ASI-8). These pages may be of value to the neophyte kit builder, but they are not complete enough with respect to diodes, as I will explain later.

The expenditures for the two pictures showing how to unpack the kit could have been better used elsewhere to clarify construction steps (ASI-17 and 18).

The detailed installation pictorial (ASI-26) contains an error on the bridge rectifier polarity (BR2). This picture shows the BR2 plus pin as a minus. However, this should cause only minor confusion, as the PC board has the correct polarity printed on it, as does the pictorial on page ASI-25. Also on page ASI-26, the builder should be aware that the center tap of the 30 V ac winding of the power transformer (white/red) is inserted in the top-most hole on the PC board, while the 9 V ac and 30 V ac leads are installed below it in that order. This detail is not shown clearly anywhere in the instructions and only is apparent if one refers to the wiring schematic and compares it with the PC board. In the earlier discussion of diodes, the instructions failed to tell the neophyte how to identify the anode and cathode of the diode. When he comes to the point where he must insert it into the PC board, he has a 50-50 chance of being right. It would be helpful if he were told (back on page ASI-8) that the diode has a band on one end of its package which correpsonds with the straight bar (cathode) on the symbolic representation of the diode. One last comment about page ASI-26 – the document persists in saying that the transformer 30 V ac leads are orange, except for one place, the schematic of the transformer, where they are correctly identified as red.

On the next page (ASI-27), the voltage regulator circuit components are photographed and superimposed on the photograph as a schematic of the circuit. As so frequently happens in kits, components change in physical shape from time to time. In my kit, the 10-uF capacitors were not the same type as those shown in the pictorial. Instructions such as "caution polarity" are not very enlightening if one is unaware of what the polarity is supposed to be. It would be helpful if the polarity were indicated explicitly on the photograph. The schematic, while helpful to some, may be confusing to the uninitiated, since the relationships between the components in the photograph and those in the schematic are upside down.

Page ASI-28 is a photograph of the bottom of the mother board which is captioned "inspect and clean away residue." The text relating to this step (ASI-24a) is only slightly more informative than the picture. The builder should be told to thoroughly clean the resin residue and solder splashes from the board with alcohol and a small stiff bristle brush (acid brush obtainable at the local hardware store). The

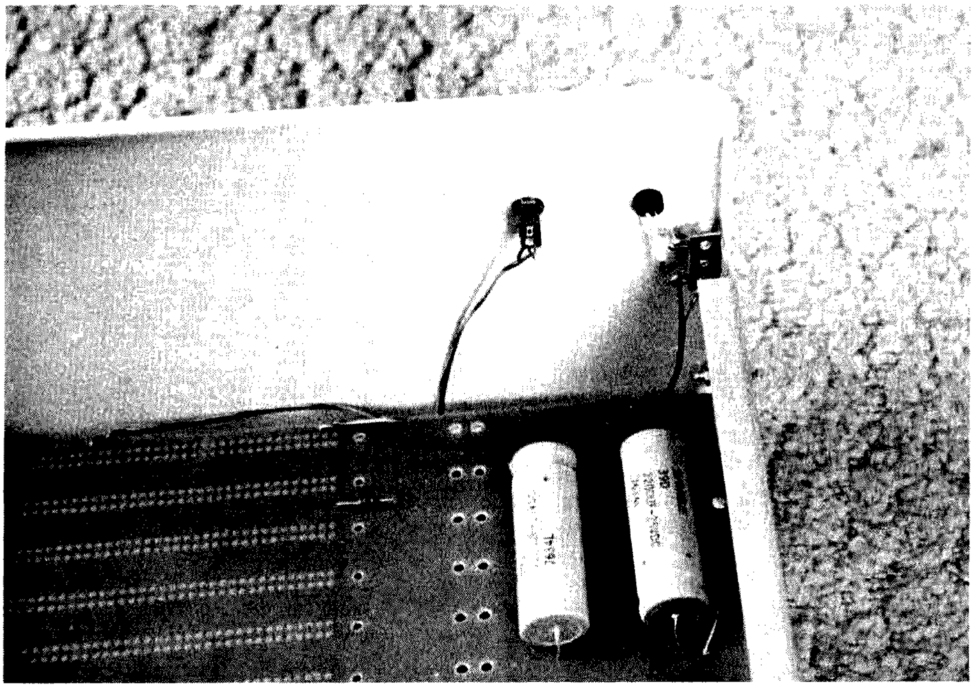

Photo D. Close-up of the power-on LED lead supports added (see text).

board should be wetted thoroughly with the alcohol in a small area and brushed until all resin is dissolved. Before the alcohol dries, the board should be blotted with a clean absorbent cloth. Several cleanings may be necessary to remove all residue. After cleaning, each solder joint should be inspected with a magnifying glass for solder bridges and cold solder joints. Cold solder joints may be identified as areas where the solder has a frosted appearance.

The transformer installation is indicated on page ASI-32. Here one gets the impression that the transformer is installed after the front and back panels are in place. This is wrong! This impression stems from a picture showing the back panel already in place.

After reading page ASI-33, the neophyte may have some trouble installing the power cord grommet/strain relief, if he has never installed one before. He should have a pictorial to go by and a bit of encouragement that the task is at least possible. Attempting to push the two parts of this grommet together with the heavy line cord between them and to insert the entire assembly in the hole in the chassis is almost like trying to put a one-inch-square peg in a ½-inch-round hole!

The schematic of the power transformer (ASI-34) should have a note to instruct the builder to scrape the paint away from the lug mounting screw hole so a good connection can be made for the ground wire of the line cord. This isn't made clear, and I imagine that some builders may wonder why there is no ground on the chassis when they come to that part of the checkout in later steps.

Page ASI-40 has a much better view of the jumpers that were installed earlier in the assembly process (ASI-25). The photo has increased contrast, and the details stand out more visibly. Here one realizes that the board has some changes in the location of the LED power connections from those pictured. Also on this page, one is instructed to connect the start/restart switch. The switch in my kit was a double-throw spring-loaded center switch. The picture doesn't make it clear whether the second connection to the switch is made to the top or bottom terminal. Since the function implemented here is the restart, and the front panel shows this in the "up" position, I reasoned that the connection should be made to the lower terminal on the switch. This means that the "start" position has no effect. Possibly this puzzle is the result of substituting a double-throw switch for what was originally a single-throw switch.

There is one last item. In providing instructions for the cabinet assembly, very little text is available; the manual relies almost totally on the pictorials. This is fine. However, it would be helpful if the size of the screws was specified in the drawings. I found that I used a wrong screw size when I later discovered that the remaining screws wouldn't work. Thus, I had to disassemble a few things and reassemble them with different size screws.

I Like It

One might gather from all the gripes above that I would hesitate to recommend the BYT-8 to my friends. This is not the case. In spite of the above, I feel that it is worth what I paid for it, and, for those forewarned of the deficiencies, it should pose no real problems. At this point, I have tested every part of the board that I can without the rest of the computer components, and it appears to work as advertised. But who knows what I'll find when I plug in all the other components? If I feel there is more to tell at that time, I'll let you know. In the meantime, happy soldering! ■

N. Richardson W4KFT
655 Caribbean Rd.
Satellite Beach FL 32937

Do Biorhythms Really Work?

HP-55 program you can use

Do you know what is meant by biorhythm? This article describes a basic method to compute the values for calculating your biorhythms. A flowchart and a program for the HP-55 programmable calculator are provided. You should be able to use this information, rewrite it for other calculators, or develop a program for your micro. If you haven't been exposed to this fascinating subject . . . hang in there, and I'll tell all!

The word biorhythm literally means movement characterized by regular recurrence of beat, or a pattern of this, in living things. In a more strict sense, it means the study of biological cycles of man. Proper understanding and use of these cycles may help you plan for future events and forecast good days and bad days. It is one of our newer scientific disciplines and concentrates on three natural cycles that influence our physical, emotional, and intellectual actions or behavior patterns.

Scientists state that our biological cycles are set in motion at birth. From then until death, we are influenced by these three cycles. (More are acknowledged, but biorhythm study seems to be limited to these three.) The physical cycle, requiring 23 days, is said to affect such things as strength, speed, resistance to disease, coordination, and other bodily functions. (It is easy to understand why this is one of the more popular cycles!) The emotional cycle has a period of 28 days and is given reign over our mental health, mood, creativity, sensitivity, and our perception of ourselves and others. Last is the intellectual cycle, which requires 33 days to be completed. It affects our ability to recall memorized facts, to learn, to be logical, and to analyze.

When the three cycles start at birth, they start at a zero reference, or baseline, and proceed on a positive slope on the positive half of the full cycle. Halfway through the cycle, they return to the baseline and enter the negative half of the cycle. At the end of the negative portion of the cycle, the zero reference line is crossed again, and the process will then repeat itself.

There are, therefore, three main parts to consider: the positive half cycle, the negative half, and the zero reference. The theory states that, during the positive portion, all capacities, energies, talents, and skills will be enhanced. The negative portion is described as a rehabilitation period during which all attributes of the rhythms are of reduced magnitude. When any cycle crosses the zero reference line, that day is referred to as a *critical day*. It is during this period that we are most likely to experience accidents, physical harm, arguments, depression, inability to learn, poor judgment, etc. All would depend on the cycle or cycles involved.

It is possible to have single, double, and triple critical days. Double critical days are to be approached with extra caution. Such days occur when two cycles cross the zero reference line on the same day. They may both be on a negative slope or on a positive slope, or one may be positive while the other is negative. So far as I know, there seems to be no evidence to indicate a need to differentiate between the three types. Triple critical days occur at birth and once every 21,252 days, when all three are on a positive slope. So you can expect to be "born again" every 58 years and 67 days. By the way, the number 21,252 is derived from the product of the three cycles.

Without going into detail beyond the scope and intent of this article, it should be noted that a great number of well-documented cases have been recorded to support the biorhythm theory. Airplane crashes, train wrecks, automobile accidents, and other tragedies have occurred in very abnormal numbers when the responsible people had critical days. Theory tells us to use extra caution, self-control, and restraint on critical days. Expect things to be subnormal on the negative half cycle. You may not beat world's records, but you will do your best during the positive half of the cycle, especially if two or all three cycles are so positioned. All other days will be "mixed." I'll get to more about these later in the article.

Now let's get to the program itself. The theory states that we complete a physical cycle every 23 days, an emotional cycle in 28 days, and our intellectual cycle requires 33 days. It also states that all three start in phase at birth on the positive slope. It is obvious that the three will immediately start to go out of phase with each other. Thereafter, the composite biorhythm situation will vary from day to day. Small numerical values for each of the cycles would seem to be the best method to appraise them.

In order to arrive at some suitable numerical value, we must first divide the total number of days alive (TDA) by the number of days in the rhythm cycle of interest. For

DISPLAY LINE	DISPLAY CODE	KEY ENTRY	COMMENTS
00.	//////	//////	(TDA Entered)
01.	33	Sto	TDA stored in memory
02.	01	1	# 1.
03.	34	RCL	"360" recalled from
04.	02	2	memory # 2.
05.	71	x	TDA & 360 multiplied
06.	33	STO	and stored in
07.	00	0	memory 0. (Deg. Product)
08.	34	RCL	"23" recalled from
09.	03	3	memory 3 & divided
10.	81	÷	into Deg. Product.
11.	31	f	Sin of resultant
12.	12	SIN	angle calculated &
13.	33	STO	stored in memory
14.	06	6	# 6.
15.	84	R/S	Physical Value Disp.
16.	34	RCL	Deg. product recalled
17.	00	0	from memory 0.
18.	34	RCL	"28" recalled from
19.	04	4	memory 4 & divided
20.	81	÷	into Deg. Product.
21.	31	f	Sin of resultant
22.	12	SIN	angle calculated &
23.	33	STO	added to memory
24.	61	+	# 6.
25.	06	6	
26.	84	R/S	Emotional Value Disp.
27.	34	RCL	Deg. product recalled
28.	00	0	from memory 0.
29.	34	RCL	"33" recalled from
30.	05	5	memory 5 & divided
31.	81	÷	into Deg. Product.
32.	31	f	Sin of resultant
33.	12	SIN	angle calculated &
34.	33	STO	added to memory
35.	61	+	# 6.
36.	06	6	
37.	84	R/S	Intellectual Value Disp.
38.	34	RCL	Sum of readings
39.	06	6	recalled from memory
40.	03	3	6 & divided by 3.
41.	81	÷	
42.	84	R/S	Avg. Reading Disp.
43.	01	1	1 added to the
44.	33	STO	contents of memory 1
45.	61	+	(TDA)
46.	01	1	
47.	34	RCL	TDA recalled from
48.	01	1	memory 1.
49.	-03	GTO 03	Program goes to line 3.

REGISTERS	
R_0	(Used) Deg. Product
R_1	(Used) TDA
R_2	360
R_3	23
R_4	28
R_5	33
R_6	(Used) Avg. reading
R_7	
R_8	
R_9	
$R_{.0}$	
$R_{.1}$	
$R_{.2}$	
$R_{.3}$	
$R_{.4}$	
$R_{.5}$	
$R_{.6}$	
$R_{.7}$	
$R_{.8}$	
$R_{.9}$	

Fig. 1. HP-55 biorhythm program.

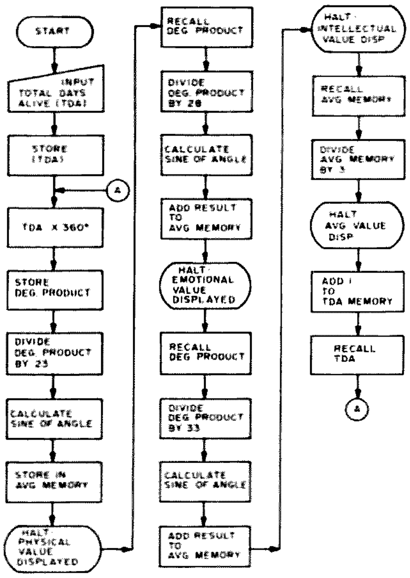

Fig. 2. Biorhythm flowchart.

1. Enter the program.
2. In the run mode, store "360" in memory register number 2.
3. In the run mode, store 23 in memory register number 3.
4. In the run mode, store 28 in memory register number 4.
5. In the run mode, store 33 in memory register number 5.
6. Enter total days alive (TDA) in the x operating register.
7. Press BST to place the program pointer to the start of the program.
8. Press R/S to obtain the physical value.
9. Press R/S to obtain the emotional value.
10. Press R/S to obtain the intellectual value.
11. Press R/S to obtain the average reading of the P, E, and I values.
12. For the next day reading and subsequent days, repeat steps 8 through 11. The program automatically increments the TDA value by 1 after each set of readings.

Fig. 3. The procedure. Note: If you forget what day you are reading, you may obtain the current TDA figure by simply recalling memory number 1. This may be done at any time without affecting the integrity of the program.

example, if the TDA = 10,000, and we are interested in the physical cycle (23 days), the result would be 10,000/23 = 434.78+. In this case, the person would have lived through 434 complete physical cycles and is into the current cycle by .78+. It is this fraction of a cycle that we are interested in. To convert this decimal number to degrees, we multiply it by 360, the number of degrees in one complete cycle. This yields approximately 281 degrees.

With this figure, we can see how far into the cycle we are, but the figure is awkward and, for some, would be hard to position in the mind. If, however, we now take the sine of that angle, we arrive at -.98. This final figure gives us magnitude and polarity in a very succinct way. By using the sine of the resultant angle, the numerical value will start at zero, increase to +1.00 at the top of the positive half cycle, decrease to zero at 180 degrees (a critical day), drop to -1.00 at 270 degrees (the negative peak), and return to zero at 360 degrees for another critical day and the start of another cycle.

The math may be simplified to: sine(TDA x 360/number of days in cycle). This is true because the sine of x degrees or any multiple of 360 + x degrees would give the same result. This method saves steps. Using this formula and the 10,000 TDA figure, the emotional value would be +.78 and the intellectual value +.19. These figures provide us with a mathematical evaluation for each of the three cycles for one particular day. They do not tell us whether the slope is positive or negative.

To find this out, we must take a second set of readings for the following day. In this case the TDA would be 10,001, the physical value -.89, the emotional value +.90, and the intellectual value +.37. If we compare these figures with the previous day, it becomes evident that all three are increasing in value. The P value is becoming less negative, the E value will reach its peak value of 1 in two days, and the I value is on the way to a positive peak. The program (Fig. 1) automatically increments the TDA value by 1 each time a set of readings is calculated with the above formula. With this program, you can obtain a set of readings for a given day and for succeeding days as far in the future as you like. A linear plot of these values will, of course, result in a perfect sine wave.

One additional "refinement" has been added to this

program. It is my personal opinion that it is the totality of all forces acting upon a person that best describes his situation. Which is to say that many factors in addition to biorhythms affect our overall well-being. Those factors are not to be dealt with here, but I felt that an average of the three values might be the best expression of this concept. For this reason, the program will also provide an average reading for each day, after the separate readings have been displayed. With the average reading, we can give a value to a "mixed day" and give it an overall rating. It is very interesting to watch the cyclic gyrations of these average figures. Unlike the other cycles, the frequency and magnitude are constantly varying and might deserve greater study.

As previously mentioned, the critical day happens when the cycle passes through the zero reference line. This will occur when the slope is negative (going from the positive half cycle to the negative half) and when the slope is positive. This should be indicated by zero, but on the HP-55 with this program, you get things like -3.18927540 x 10^{-9} and other weird figures close to zero but not absolute. This, I believe, is due to inherent limitations of accuracy. It should also be noted that a critical day occurs not only at the end of a cycle but also at the half-cycle point.

In the case of the emotional cycle, this would be at the 14- and 28-day points and doesn't cause a problem. The P and I values do, because half of 23 is 11.5 and half of 33 is 16.5. For this reason, on these two rhythms, every other critical day point will not be indicated by zero (or a figure very close to it), but rather will be indicated by two continguous days of low, equal-but-opposite polarity values. .14 and -.14 are good examples. How do we interpret this condition? For the moment, let us assume that birth occurred at 12 noon. Presumably, the critical point of each critical day would then be at noon. This is fine for the emotional cycle, but in the case of the other two, we are forced to assume that the critical time of the half-cycle critical day is positioned ½ day after the birth hour. In this example, that would be at 12 midnight, splitting two days. In any event, you may assume that the critical day, under these conditions, resides between the two low, equal-but-opposite polarity values.

One problem with this subject is the task of determining the TDA figure. You can do this by counting the number of days in your first partial year of life. To this add all the normal 365-day years and the 366-day leap years plus the number of days in the current year. Or you can use one of several "Days Between Two Dates" programs, such as the one in the HP-55 mathematics programs booklet. Texas Instruments also have a similar program for their calculators. However you calculate it, be sure to make a note of the date and TDA figure. For future calculations, you then need only add the intervening days.

A flowchart (Fig. 2) is included in this article in hopes that it will be of assistance to those of you who own microcomputers. I believe that, with proper graphics, you should be able to display each cycle for a month at a time and all three with colors to represent each. The flowchart should also help those with programmable calculators of divergent operations.

So there you have it – a rather uncomplicated procedure to obtain easily-understood numerical values for biorhythm cycles. For greater depth of interpretation, I suggest the local library or a small investment in one or more of the books available on the subject . . . which is to say – don't ask me; I just wrote the program! ■

Terry Johnson WB4POH
1403 Chambers Street
Rogersville TN 37857

From CB To Amateur Radio

—article for CB acquaintances

Out of the noise of channel 19 at rush hour comes:

"Breaker for local information."

Pause. Your radio emits a curious garble of voices, none of which seem interested in helping the breaking station.

"Breaker, 19, for local info."

Well, the noise level is about S9, but he's coming over it okay, so he must be close by. You squeeze the D104.

"Go ahead, local info breaker. This is KIY3470 base."

"Thanks for the comeback. This is KGY8 (garble) ... on the bypass near (squeeeeeel) ... of fuel. Can you lay a landline to a service st(HOWBOUT YE HODDOBBER! HOWBOUT THAT HODDOBBER ONE TIME! BREAKER BROKE!) ... if you will?"

Hmmmmm – you tell the mobile to stand by while you look for a clean channel. You try channel 9:

" ... and I'll talk on any channel I want to!"

So much for that. Try the mobile again on 19. You know he's coming back to you, but you're catching 40-channel bleedover from "Halfwatt," whose radio certainly is not two blocks away. Now you're getting steamed, but all you can do is call a service truck and hope for the best.

Sound familiar? You bet it does. Serious CBers have been grappling with such problems since the CB boom caught on a few years ago, and, with the new sunspot cycle beginning soon, no relief is in sight. Forty channels won't ease the situation much, either. What's the serious CB enthusiast to do? If you think I've got the answer, you're right.

The answer is ham radio. Now, hang on. Before you put down these hallowed pages and decide to watch a "Star Trek" rerun, reflect for a moment. Everyone knows ham radio operators are an elite group of electronic wizards possessing thousands of dollars worth of electronic gear, who magically read sense into a curious chirping known as Morse code. Right? Wrong.

I know hams who barely know one end of a diode from the other. But it's no matter; their interest is in communicating. And communicate one can. I confess to deriving not a little satisfaction from an incident a few weeks ago. I was chatting with a fellow in Knoxville about 60 miles away on 2 meter FM, and stopped at a gas station frequented by a lot of local CBers. The attendant, an old CB buddy of mine, got curious. I explained to a growing crowd that, sure, he was in Knoxville, and sure, he was running a 2-Watt walkie-talkie, and sure, I was running 10 Watts, and no, this is not unusual at all. I was even obliged to open the trunk to demonstrate the absence of a linear. (I considered making a phone call from the car, but one doesn't want to overdo it.)

OK, ham radio is great, you say, but the code . . .

Ah, yes, the code. The bane of every would-be ham since Marconi. Consider this: A five-year-old boy passed the five-words-per-minute code test last year. Even more incredible, so did I. Understand, I'm no expert at anything, just an old CBer who decided to get into ham radio. I did it. You can do it. A year ago the code sounded to me like it does to you – incomprehensible.

Radio theory? As a serious CBer, you have a good head start here. Granted, it takes some study of theory and regulations to pass the written test, but excellent help is available.

Actually, there are four hurdles to clear to become a ham. You just cleared the first by being interested enough to read this far. Then there are the code and the written tests. But, and I speak from experience, the most difficult hurdle, by far, is getting started. Decide to do it now.

In my opinion, your first goal should be a Technician ticket. It permits voice work as well as Novice code privileges on the HF bands. It requires the five-words-per-minute code test (remember the five-year-old kid?) and a multiple-choice test on general radio theory and regulations. Here's what you get in return:

1. All amateur privileges on 6 meters (50 megahertz) and higher frequencies. This includes the fascinating world of 2 meter FM and repeaters. A kilowatt is legal, but a few Watts will do fine.
2. CW (code) privileges on parts of 80, 40, 15, and 10 meters (250-Watt limit for all hams in your band segment). A few Watts will work the world.
3. Fun and friends. You will find a large number of people on the air, eager to help you with any problems. Incidentally, never have I felt put down or ill at ease since becoming a ham. You may have heard that hams look down on CBers; that's not true in my experience. Hams need you.
4. Lots more. Ham radio is forever new. New bands, new modes, new rigs, new technology, amateur TV, teletype, satellite communication, and more to come.
5. Satisfaction. Nothing helps the old ego like setting a goal and then reaching it.

OK, here's what to do. Turn to the rear of this magazine, and you will find that its editor, Wayne Green, has paved the way for your entry into ham radio. *73 Magazine* offers code and theory tapes at low prices to help you get your ticket. Now there's a right way and a wrong way to do anything. Thousands of hams learned the code the wrong way, including me. Believe me, these tapes will save you a lot of grief later on.

So get started. There's a wide world of fun out there in ham radio, and we need you to be a part of it. There are thousands of ham radio clubs conducting code and theory classes. Join one. Order your tapes. It sure beats putting a pin in old Halfwatt's coax. ■

Warren S. Fowler
253 North 171
Seattle WA 98133

How Much Power Does It Draw?

—build this simple ac wattmeter and find out

Have you ever wondered how many Watts of power a piece of equipment actually consumed? I have pondered this question many times in my career. The solution necessitates a relatively large outlay of money to get an accurate answer. In order to get a true answer, it requires the measurement of input voltage, input current, and power factor.

In none of my cases do I require the exact answer. A relative answer would serve my purpose. So, by utilizing a current transformer method and my junk box, I get a more-than-adequate answer, and it doesn't require any more effort than reading a simple meter scale.

The basic circuitry is as shown in Fig. 1.

The formula I used to determine the milliammeter range is: Watts ÷ line voltage ÷ 1.414 ÷ ratio = meter current in Amps.

To construct your unit, you will need to decide what are the minimum and maximum wattages you will want to measure. Since the meter scale is not a linear function, the meter scale will be compressed at the lower end. I settled on a multirange unit.

The fuse should be of the household variety, since the 15-Amp size of type 3AB is difficult to find, and the type 3AG will vaporize on the interior of the glass and provide no protection.

The bridge rectifiers can be made of type 1N4001 diodes, since they only supply the meter movement current.

To have a multirange instrument, you can use either multiple outlets, one for each range, or a heavy-duty (15-Amp) switch.

The current transformer is the heart of the instrument and must be wound to suit your desires, as it is not commercially available unless you want it custom made. To wind one yourself is not a big undertaking and only requires some wire, tape, and an old core. I used old speaker output transformers for my cores. The size is not too critical, since there is only miniscule wattage requirement of the meter movement. You should ascertain that you will have ample winding space. I wound my transformers with 604 turns of #36 on the secondary for 117 volts line voltage. If you have 120 volts, use 590 turns, and, for 115 volts, use 615 turns. The primary was wound as follows: 10 turns #18, tap, 6 turns #18, tap, 2 turns #18, tap, 1 turn #14, tap, 1 turn #14. This gave me a total of 20 primary turns which, with the secondary of 604 turns, resulted in the following ratios: 100 Watts = 604:20 or 30.2, 200 Watts = 604:10 or 60.4, 500 Watts = 604:4 or 151, 1000 Watts = 604:2 or 302, 2000 Watts = 604:1 or 604.

The meter used had a full-scale value of 20 milliamperes. A recalculation of turns ratio may be made to accommodate another meter range. A simple solution for the utilization of, say, a 0-1 milliammeter is to put a 100-Ohm trimmer pot across the meter movement and adjust it to read 100 Watts for full scale deflection.

To calibrate my units, I used several 25-50-100 Watt light globes to provide me with loads to calibrate the meter scale. By using them in parallel, I was able to acquire enough plot points to make a new meter scale. I made my meter scale on white paper, then inked the marks to suit and reinstalled it. I pasted the scale on the reverse side of the original scale using rubber cement.

An error of ± 5% can be expected, since the line voltage will vary by this amount. This error should not be objectionable, since the equipment will be subject to the varying line voltage in operation anyway. In order to lower the error rate, it would be necessary to utilize an electrodynamic meter movement, whereby the electromagnetic field of the meter could vary with the varying line voltages. ■

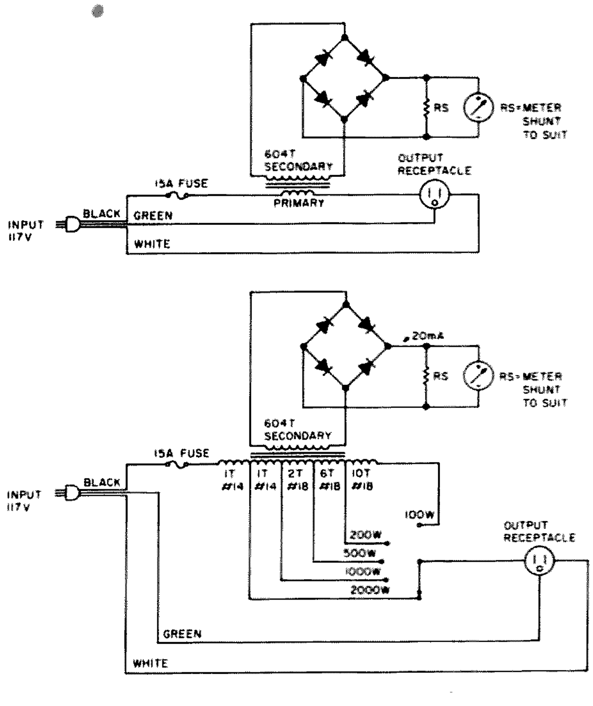

Fig. 1. Multirange circuitry.

Surprisingly Low-Cost Lab Supply

—an IC regulator does it!

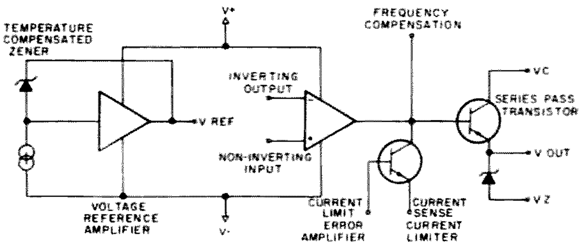

Fig 1.

Hank Olson W6GXN
P.O. Box 339
Menlo Park CA 94025

The μA723, as first introduced by Fairchild, is one of the oldest and most accepted regulator ICs in the industry. The μA723 is second-sourced by almost every linear IC house in the U.S. and still enjoys enormous usage. Thus, this IC has become about as inexpensive as a linear IC can be. The μA723 equivalent circuit is shown in Fig. 1.

Because V_{ref} (the internal reference voltage) is about 7 volts, the μA723 is usually configured in one of two basic circuits — one for output voltages below 7 volts and the other for output voltages above 7 volts. These basic circuits are shown in Fig. 2. The usual external current-increasing transistors are not shown here, in order to keep the circuits simple.

One of the linear IC houses which makes the equivalent of the μA723, Teledyne, has published an application note in which is shown a novel circuit that allows output voltages above and below 7 volts.[1] That basic circuit is shown in Fig. 3. This circuit has in it a correction that was made from the original (which would have prevented the "current limit" from functioning). A complete lab-regulated supply providing 2 to 20 volts dc with current-limiting at 300 mA is shown in Fig. 4, with an NPN power transistor to increase current capability. The IC pin connections in Fig. 4 are for the dual inline package version of the μA723 only; the "TO-5 can" packaged 723 would

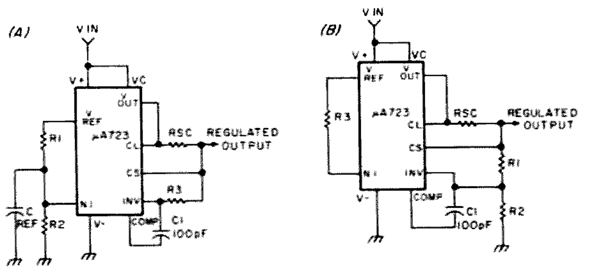

Fig. 2. (a) Basic low-voltage regulator (V_{out} = 2 to 7 volts). (b) Basic high-voltage regulator (V_{out} = 7 to 37 volts).

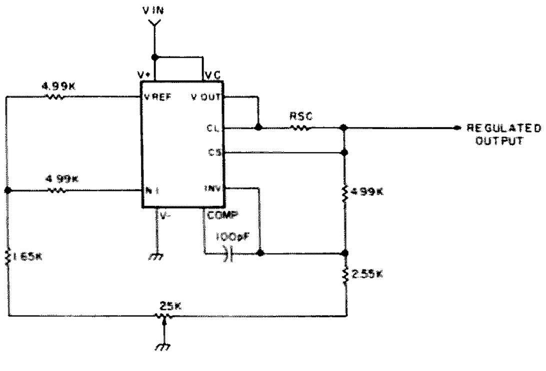

Fig. 3. Basic wide output voltage regulator circuit with 723.

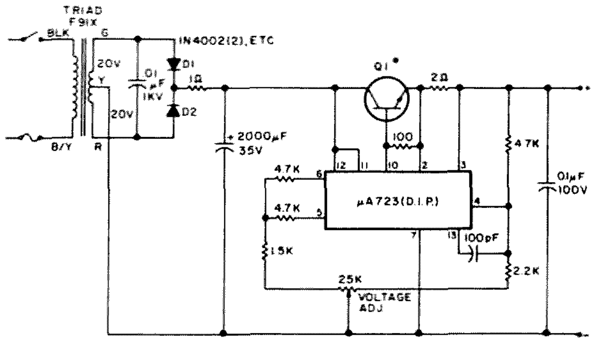

*Fig. 4. Regulated lab supply. D1, D2 = Motorola HEP R0051; Q1 = Motorola HEP S5000. *Heat sink with washer and silicone grease.*

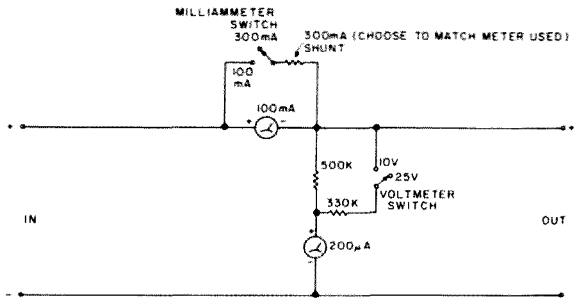

Fig. 5. Metering section.

work as well, but pin numbers would have to be changed. The rectifier-filter section utilizes a Triad F91X transformer and a full-wave rectifier with capacitor input. The rectifier diodes are Motorola HEP R0051s, but almost any two 1 Amp silicon rectifier diodes (1N4002s, for instance) could also be used. Q1 is a Motorola HEP S5000, but it has several equivalents – RCA SK3041, Sylvania ECG152, or 2N5191.

All the parts are board mounted, with the exception of the transformer, filter capacitor, and 25k voltage-control pot. In off-board mounting of the 25k pot (say on the front panel of one's own power supply cabinet), the lead lengths of the wires to the pot should be minimized.

It is intended that the ac switch, fuse holder, meters (if used), and binding posts also be mounted on the cabinet housing the circuit board. LMB and Bud each have a line of small box cabinets that would be suitable for making a finished bench supply using this circuit. The choice of which particular cabinet will usually be dictated by the meters one has on hand, because the circuit board is only 2 x 2½ inches. I used an LMB W1N box cabinet (10" x 4" x 3½"). The metering circuit, using meters that were on hand, is shown in Fig. 5.

For all its use of inexpensive or available parts, this regulated supply has more than proven itself on the bench. The 2-volt lower limit allows even RTL and low-voltage CMOS logic to be operated from the supply, and the 20-volt maximum output voltage allows for most other logic and linear IC circuits. ■

Reference

[1] Teledyne, *Linear Microcircuits Application Note 2: 723/823 Voltage Regulators*, 1971.

Karl T. Thurber, Jr. W8FX/4
233 Newcastle Lane
Montgomery AL 36117

Wireless Monitoring For the Bionic Ham

—be in touch all the time

I have always been intrigued with the fun potential as well as the practical value of the little home wireless broadcasters, from the earliest tube-type ("Hear your own voice from your radio") AM BC-band jobs to the newest solid state miniaturized modules.

Several solid state FM wireless mike PC board kits require nothing more than a source of low-voltage dc, a short antenna, and a microphone or other source of audio input. I evaluated several units for use as a general-purpose scanner rebroadcaster (among other things). By far, the most interesting of these is the Model SI-36 FM wireless mike kit, available from Sabtronics International in Dallas. This unit, which features a unique PC board layout eliminating the need for wire-wound coils, covers 50 MHz to 150 MHz with a typical power output of 100 mW using a 9-volt transistor radio-type battery.

The module I selected is the Sabtronics Mini-Kit. The 1.8" x 1.8" PC kit goes together in a few minutes, comes complete with all components and very good instructions, and, using a 9 V dc power source, will transmit to any nearby FM broadcast receiver up to 300' or more away. It has a sensitive 25k Ohm mike input which will accept practically any crystal, dynamic, or ceramic mike of medium-to-high impedance and runs on nine to 12 volts dc. That makes it handy to use a couple of penlight cells or a 9-volt battery as the power source or to tap off a convenient source of voltage from the transceiver or receiver with which it is to be used.

I built one of the Sabtronics units into a Radio Shack #270-251 miniature equipment case (3¼" x 2-3/16" x 4"), incorporating into the design such convenience features as a more-or-less standard four-pin CB-type mike jack on the front panel, a BNC external antenna jack and short whip inserted in an F-type connector on top, and provisions for external power on the rear panel apron. (The PC board is simply epoxied into place in the center of the case, using ¼" standoffs.) An SPST miniature toggle switch installed on the front panel serves as the on-off switch, and another SPDT miniature toggle allows selection of either microphone or external audio input.

The wiring of the mike jack can be selected to match the pin connections of whatever ham or CB mike happens to be conveniently surplus to current ham shack needs! In the schematic shown in Fig. 1, only the audio and ground leads are connected, the mike not being wired for PTT, which probably would serve no useful purpose. Depending on the mike used and its internal wiring, the PTT switch may have to be depressed to make it "hot." At W8FX, a 50k Ohm high-impedance Tempo mobile mike was used with good

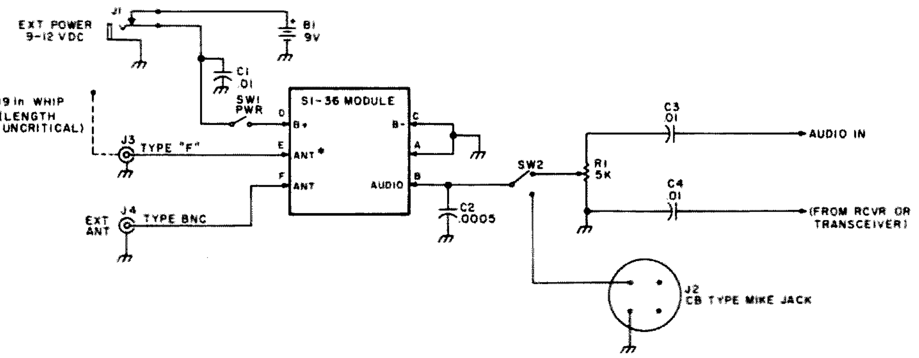

*Fig. 1. Using the Sabtronics FM module. Letters refer to wiring points on the PC board. All component values are nominal. SI-36 module sold by Sabtronics International, P.O. Box 64683-E, Dallas TX 75206. *An alternate antenna is a 3-foot length of flat TV-type twinlead connected to points E and F on the PC board, as recommended by the manufacturers, instead of the 19" whip I used. (Twinlead can be routed through a grommet on the rear panel.)*

results. Almost any mike could probably be used, as the audio gain of the two-transistor module is very high.

Note that the transmitted frequency is somewhat dependent on supply voltage. Therefore, switching from internal battery to an external power source will cause the frequency to change, and it may be necessary to readjust the trimmer condenser. Note also that the antenna affects transmitter output frequency, so any close movement next to it should be avoided.

Although I used the Sabtronics module, a similar module (limited to 88-108 MHz coverage and 100 mW maximum power) is offered by Ramsey Electronics, Rochester NY. This unit will operate off 3-9 V dc and can accommodate either a dynamic, crystal, or ceramic microphone. Alternate wiring connections for using the Ramsey module are shown in Fig. 2. I have built one of the Ramsey units, but I use the Sabtronics module in the wireless box of Fig. 1.

The extremely small size of the Ramsey minikit, 1" x 1" square, opens up additional possibilities, such as permanent internal installation inside a receiver or transceiver. In fact, the Ramsey module is small enough to mount in a plastic minibox along with a 9-volt battery or two AA penlight cells, with a phone plug installed in one end of the enclosure, allowing use with practically any receiver with an external speaker or headphone jack. It can even be connected to the audio output of a mobile 2 meter transceiver to take advantage of high-quality external speakers usually installed with the newer AM-FM car radios, transmitting an FM BC signal from the transceiver to the car radio. Similar ultracompact modules are available from Poly Paks, Inc., South Lynnfield MA, in both AM and FM broadcast band designs. The Poly Paks AM unit, Model WM-5, is designed for high-impedance input and runs off a 9 V dc power source. The FM version, Model FMM, requires 1.5 volts for operation and is available in both high- and low-impedance models. Similar modules are sold by Burstein-Applebee Co. and other large distributors.

I have found a number of interesting uses for the unit; individual constructors may want to modify the design somewhat, depending on the exact purpose intended. I will discuss some of the more readily apparent uses.

Scanner rebroadcaster — At my QTH, the unit is normally left connected to a Bearcat 101 synthesized scanner, which is programmed to receive eight of the local 2 meter repeater and simplex frequencies and eight local fire/police channels. The Bearcat has an accessory terminal strip which provides a source of 12 V dc on the rear panel apron, which can be used to power the unit. The wireless box can be left "on" whenever the scanner is operating, retransmitting whatever the scanner intercepts on the FM band. I find this particularly handy in monitoring local repeater channels around the house and find it works particularly well when used in conjunction with an FM receiver having afc, as there is a slight frequency drift. (If you plan to use the unit with the Bearcat, note that terminal strip TB1 on the rear of the cabinet has three terminals. Unswitched 12 V dc is available between pin 2 and pin 1, the latter being at ground potential.) Good results have been obtained using the Bearcat as a source of external power. If hum proves to be a problem, try connecting a 25-50 uF 15-volt electrolytic across the terminals. (On my Bearcat, pin 3 of TB1 provides a source of 12 V dc, which is available only when a signal is present which rises above the squelch threshold, for use with accessories sold by the manufacturer. I tried using this source of dc power, making the rebroadcaster something of a repeater itself; however, doing this was not practical, apparently due to insufficient current being available at the terminal. The possibilities are interesting, however, and deserve further experimentation.)

Wireless headphones — The little unit can be connected to the station receiver or transceiver and used in conjunction with one of the new lightweight FM radio headphones, allowing cord-free flexibility. Although I have not made use of this application with this particular unit, it has been done in the past using other wireless mikes and has been found to be a great convenience. One possible advantage would be in multi-op contest work, where a number of operators can listen in to what's being worked for logging, backup CW copying, etc., without being connected in to the usual rat's nest of cables around the rig. Of course, a set of radio phones would have to be available for each operator, though these are coming out of the novelty stage and are now fairly plentiful and inexpensive, being available in both AM and FM models.

General-purpose monitoring — The rebroadcaster can be connected to any receiver around the shack, such as a 2 meter receiver or transceiver tuned to a favorite repeater or simplex channel, to a VHF weather receiver, to the HF receiver tuned to a traffic net frequency, or even to a local CB channel. REACT CB team members might find this feature useful in monitoring channel 9. A small portable transistor radio tuned to the rebroadcaster FM channel will alert you if a call is received on your communications gear. Since the radio can travel with you, you're never far from the

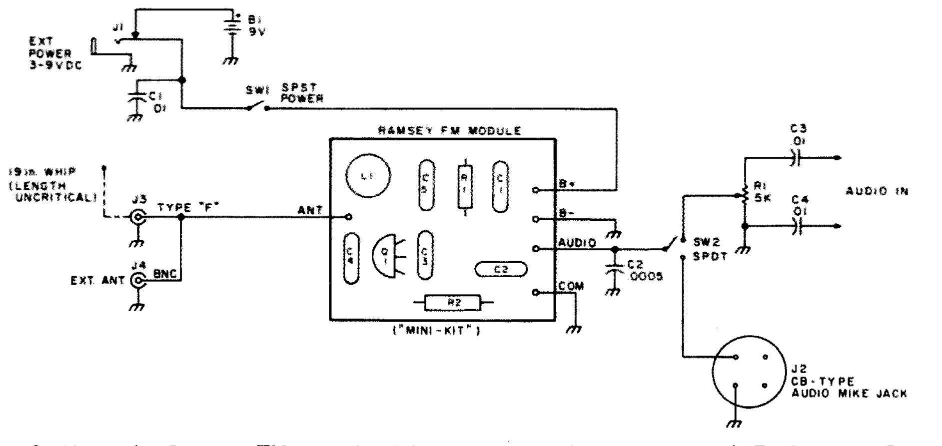

Fig. 2. Using the Ramsey FM module. All component values are nominal. Enclosure is Radio Shack #270-251. FM module sold by Ramsey Electronics, P.O. Box 4072A, Rochester NY 14610. As the PC board connectors are not numbered, this diagram indicates the orientation of the board (from top, looking down) and proper external connections.

shack, whether tinkering in the garage, in the yard, or mowing the lawn. The unit, as configured in Fig. 1 or 2, will work with practically any impedance equipment (low-impedance speaker outputs, medium-impedance tape outputs, etc.); just adjust the receiver that is to be used with the wireless box to its normal audio level and adjust the pot inside the rebroadcaster (while monitoring on an FM broadcast receiver) for a strong, undistorted transmission from the rebroadcaster. Fine adjustment of audio levels can be made using the audio gain control of the input receiver. I found a cheap Weathercube fixed-tuned weather monitor at a local discount store for $6.95, which is excellent as a monitor — the 162 MHz receiver can be readjusted easily to cover the FM BC band.

Test signal generator — Connecting an audio signal generator to the audio input of the unit, the 50-150 MHz range of my SI-36 module has been very useful as a wide-band VHF signal source for receiver peaking, etc.

For fun — The mike input feature, coupled with the portability of the unit, makes it suitable for children's use or in just about any other situation where an FM wireless mike might be useful. However, a word of caution is in order. Output levels may considerably exceed 100 mW and, as frequency excursions well outside of 88-108 MHz FM are possible with the unit, connecting it to a real antenna could wreak havoc with local TV, FM, aircraft, and even 2 meter communications, and as such, should be used very carefully to avoid serious RFI problems. Stay in the FM band!

Building this unit, which consists of off-the-shelf readily-available components, was truly a fun project and has been even more fun to use. ■

John P. Cranston, M.D. WB2DYU/2
202 Wall Street
Corning NY 14830

I Need A Contact!

—shooting for WAN/C

CQ, CQ, CQ ... still no answer. Try again ... CQ, CQ, CQ ... wonder if my antenna has fallen down again, or maybe my tubes have finally given up? CQ, CQ, CQ . . . is that an answer? Nope, still nothing. CQ, CQ, CQ . . .

Such is a rather typical evening for me, while playing at being a ham. I think that I may hold the record for more "N/C" (no contact) entries in my log than anyone since Marconi. And, somehow, it doesn't soothe my wounded pride in the slightest to read about some other fellow who just worked moonbounce with a .001 milliwatt rig that was powered by his pet hampster running on a treadmill, or learning that a six-month-old child just got his Extra class license. After reading such articles, I decided that it was time that someone told the other side of the story, someone who has tasted the agony of defeat.

Back to the beginning, though, and let's see if some of this doesn't sound rather familiar to you all. I've had a curiosity and interest in radio, TV, tubes (remember them?), and wires since I was old enough to stick my tongue into a wall plug. But, somehow, the process of learning the code and theory always seemed to be a bit too overwhelming to tackle. After putting it off time and time again, I was looking through the want ads in the local paper, and there, big as life, was an ad for a garage sale which featured "used ham radio gear!" With visions of a mint Collins rig being disposed of for $50 or $60, I argued to myself, "If I get the rig, that will force me to learn the code and get my ticket, so I can use the bargain that I'm about to buy." The circular reasoning of that logic escaped my notice, as I rushed off to find the bargain that awaited me.

Needless to say, there was no mint Collins rig. But, there *was* a Globe DSB 100 for only $25, a nonmatching and nonfunctioning vfo, and one out-of-Novice-band crystal. Being a sucker for a bargain, I began to dicker with the owner and finally settled on the price of $25 for the lot. Cradling the rig gently, I trotted home and set it reverently on my table.

Now, what do you do with a transmitter when you have no license to use it? You get a dummy load and play like it is really an antenna, just for the fun of watching "your rig" at work. A quick trip to Sears netted a dummy load, a porcelain socket, and a 50 Watt light bulb. Never has the feeble glow of a light bulb met with such excitement! But in my haste to illuminate, I forgot rule #1 — ground everything!

As I tuned the Globe with one hand, my other hand came to rest on my receiver, and the next thing that I remember was waking up on the other side of the room, lying on the floor. "I think something is wrong," I thought profoundly. A check with the voltmeter confirmed my suspicions, showing the case of the transmitter to be a bit warm, running 115 volts, in fact. This seemed to be a rather uncomfortable way to run a shack, so I felt some investigating was in order. There was no need to unplug the rig, as the power cord had been blown out of the wall socket, leaving its charred remains quietly smoldering. After deftly removing the chassis from the case, a quick and intense one-hour search pinpointed the problem; an rf bypass capacitor on the power line had been bent, shorting directly to the chassis. Conveniently, it was on the hot side of the fuse, so I was spared the 49¢ for replacing a blown fuse.

In spite of this inauspicious beginning, the ham bug had bitten, and that Novice ticket was inevitable, though not quick in coming. All sorts of minor delays kept cropping up, like job, new son, earning enough to keep everyone fed, etc. But, finally, the little slip of paper arrived, telling me that the FCC, in its goodness, had christened me WN2DYU. But that blasted piece of paper led to more and bigger problems. To wit, how do you string an antenna when you live in an apartment (no holes in walls or roofs), surrounded by trees carefully arranged to make it impossible to hang any wire longer than twenty

feet? Solution ... you hang twenty feet and try.

What I now realize is that I had stumbled onto a variation of the most frequently used and most underpublicized type of antenna, the diode antenna. Now I'm sure that everyone has had experience with this electronic marvel — you can hear anyone and everyone on it, but your signal is swallowed up into that wire, never to be heard from again. And so the N/C contacts began to accumulate in my log. My best (in fact, only) contact netted me a signal report of 349 on 80 meters, from a station literally within line of sight of my basement shack. But, so what . . . it was a contact, and my first!

Several months, and several pages of log sheets full of N/C later, a move to a new city was ordained. At last, I had a house with a backyard big enough for a *real* antenna! But it seemed that the power company had thought of that. They had carefully strung the power lines to the house diagonally across the entire yard, leaving me the choice of risking stringing an antenna where it would fall onto their lines or trying something new. Considering my past experiences with line voltages, I decided on the latter alternative and erected a beautiful (to me) 30-foot vertical (war surplus, $0.50 per 3-foot section). Look out, DX, here I come! So what if the guy wires looked like the workings of a psychotic spider, and my wife cringed every time she walked into the backyard . . . I had an antenna. The only catch was that I had built another diode antenna, and my only DX (and only contact) was one out-of-state station.

"It's obviously a problem with the swr," I said, as I pored over the *ARRL Handbook*, an antenna handbook, and other learned texts. So I whipped up a transmatch, wired it into the feedline, and succeeded in making the finals in the Globe glow a pretty, cherry red with a mismatch that can only be guessed at. More coils, more wiring, more variable capacitors, and more soldering only seemed to compound the problem. Then, an article appeared in *73*, and things began to clear up a bit. If I can summarize the article, whose author I don't remember, but to whom I am forever indebted, "If the rig loads up properly, forget the swr." Out came the transmatch, the coils, the capacitors, everything. And lo and behold, the finals stopped glowing and the transmitter stopped smoking, and all was right with the world . . . almost. I still got no contacts. Finally, I got a contact and a new, personal DX record of about 100 miles, and right in the middle of the contact, my antenna came crashing gracefully to the ground!

I will admit to a touch of discouragement at that moment, and publicly apologize to Mr. Marconi, Mr. DeForest, and the other founding fathers of amateur radio for the names that I called them and their invention.

Before another antenna could be erected, another move, to my present location, transpired, and, again, I was faced with the problem of space for my antenna. Why is it that everyone else has a backyard of 5 acres, complete with two towers spaced exactly one-half wavelength apart and 600 feet tall? For me, nothing comes that easily, and I am presently set up with the faithful Globe DSB 100 (by the way, to ease the suspense, it is a double sideband, with a nominal 50 Watt input) in my unheated and uncooled attic. The antenna is a random wire (that is the correct way to describe an assortment of copper, steel, aluminum, and heaven knows what other kind of scrap all soldered together into a mass that has a built-in knack for tangling itself into a huge knot at a moment's notice) that runs across the attic and out of a gable vent. From there it dangles across my yard, beside the ever-present power lines, to a "tower" of scrap lumber that is bent and ready to snap at the most inopportune moment. The rig *is* grounded, but that required another line out of the other gable, across the roof, down the side of the house, into a cellar window, across the cellar and, finally, to a cold water pipe.

Does it work? I don't know, as I have yet to hit the key and try it. But, to be quite honest, I'll be surprised, and somewhat disappointed, if it does.

Where does this all leave me? I still love radio, still am practicing my code to try for General, and still love the old Globe that started me off and is still serving well. And I still feel a tinge of jealousy when I see the photos and read the articles about other hams with their 1000 Watt, mega-dollar rigs, capable of contacts as far removed from me as intergalactic communication. But I also feel a little bit of pride and can't help feeling a little bit like a second pioneer on the threshold of the rediscovery of shortwave radio communication. Anyone can flip a switch, turn a knob, or whatever, and fire up a 2000 Watt PEP rig hitched to a 79-element 200-foot-high super squawk antenna and talk to the other side of the world. How many can claim the experiences that I've had or have gotten the fun and feeling of accomplishment that I've gotten in my brand of ham radio? All the N/Cs in my log are like purple hearts to me, and each one has a tale to tell and scars to show. And, at the present rate, I'll soon be eligible for WAN/C (you guessed it . . . worked all no contacts)! ■

FCC Math

from page 20

same as for the prefix for *micro*) is the symbol for the *amplification factor* (which tells how well a tube amplifies). Δe_b is the *change* in plate voltage (Δ is the capital or upper case Greek delta, commonly used to indicate *change in*) that produces the same change in plate current as Δe_c, which is the change in control-grid voltage.

(a) Solve for Δe_b.

(b) What change in plate voltage (Δe_b) is equivalent to a control-grid voltage change of 2 V in a tube that has a μ of 20?

(12) $\beta = I_C/I_B$. β is the *current transfer ratio* of a transistor in common-emitter configuration. Don't worry about the verbiage. We're just dealing with a transistor's gain here, current gain (as compared to a tube's *voltage* gain). I_C is collector current and I_B is base current. This is our final formula in this installment, so let's just take it as it is. What's the beta (that's what the Greek β is called) where I_C is 6 mA and I_B is 0.1 mA?

WORK AND ANSWERS TO EXERCISES

(1) Move the I^2 from the top of the right side to the bottom of the left, getting $P/I^2 = R$. 300 mA is 0.3 Amps, so we have 250/[(.3)(.3)] = 250/0.09, which is 2800 Ohms.

(2) $R = E^2/P$, so here it equals [(950)(950)]/125 = 7200 Ohms.

(3) $n_s = (E_s n_p)/E_p$, which here is [(12.6)(100)]/120 = 10.5 turns.

(4) X = QR, which is 78(27) or 2100 Ohms.

(5) $C = 1/(2^2\pi^2 f^2 L)$, which is

$$\frac{1}{4(9.87)(7.13 \times 10^6)(7.13 \times 10^6)(8.5 \times 10^{-6})}$$

Rounding out, etc., we get

$$\frac{1}{4(10^1)(7 \times 10^6)(7 \times 10^6)(9 \times 10^{-6})}$$

which gives $1/(1764 \times 10^7)$, which is, rounded out, $1/(2 \times 10^3 \times 10^7)$. That's $(10 \times 10^{-1})/(2 \times 10^{10})$, which gives, finally, 5×10^{-11} or 50 pF, approximately!

(6) C = T/R, which here is 0.2/800 = 250 μF.

(7) L = TR, which is (0.003)(35) or 110 mH.

(8) $Q = f_o$/bandwidth. Here Q = 1000/80 or 12.5.

(9) $E_{in} = E_{out}/Q$, which here is 18/60 (our answer will be in millivolts, since that 18 is millivolts), which is 0.3 mV.

(10) $X_L = Z_t/Q$. Here, it's 50,000/35 or about 1500 Ohms.

(11) $\Delta e_b = \mu\Delta e_c$, which is (20)(40) or 800 volts.

(12) Beta here equals 6 mA/.1 mA or 60 (the mA's cancel out, so the answer has no units).

Flash Project For Camera Fiends

—powerful electronic flash you can build

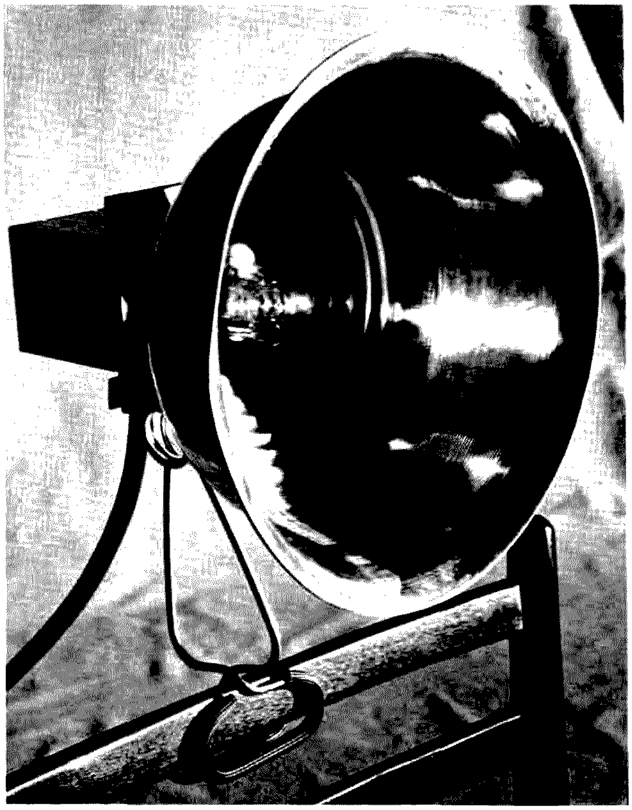

David D. Blackmer WA6UNK
Rt. 1, Willow Road
Nipomo CA 93444

Photos of an electronic project always add considerable impact to a good construction article, so an electronic flash and ham radio can go together well. Several of the parts for the flash described here should be in the average ham junk box. The most expensive parts are the flash lamps, photo flash capacitors, and the lamp trigger assembly. Sources for these parts are listed in the notes.

Refer to Fig. 1 for the basic flash information. Applying power to transformer T1 causes diode D1 to conduct through protective resistor R1, charging capacitor C1 to about 450 volts. This voltage also appears across the flash lamp electrode's pins 2 and 4. The voltage across resistors R5 and R6 charges capacitor C5 to about 360 volts. The components are now ready to fire the flash lamp, FL1. Momentarily closing the sync contacts discharges capacitor C5 through the primary of transformer T2, causing a very high voltage pulse (20,000-plus volts) to ionize the gas in the flash lamp. The lamp emits a very short powerful flash and discharges capacitor C1 below the conduction voltage of the flash lamp. In a few seconds, capacitors C1 and C5 recharge and the cycle is ready to be repeated.

See Fig. 2 and the photos. This unit can be built with one, two, or three lamps. Three lamps give the best results with back, side, and front lighting. Decide, then assemble all the parts required. Transformer T1 was a rather hefty unit with 320 volts at 200 mA, 6 volts, and 12 volts. Relay RY1 was a sensitive fast-acting miniature Iron Fireman with a 10k coil. The voltage doubler gave about 30 volts and provided

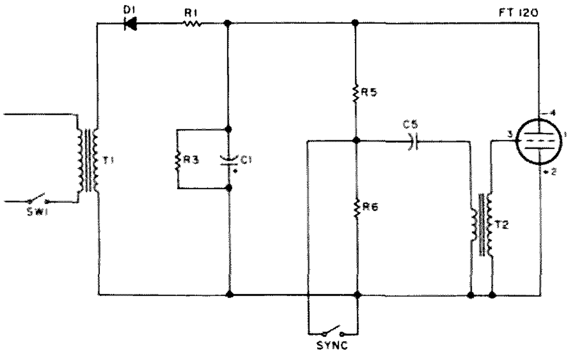

Fig. 1. Basic flash.

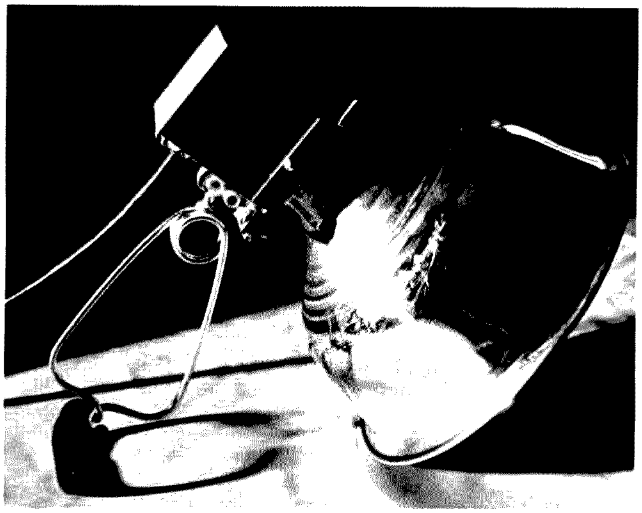

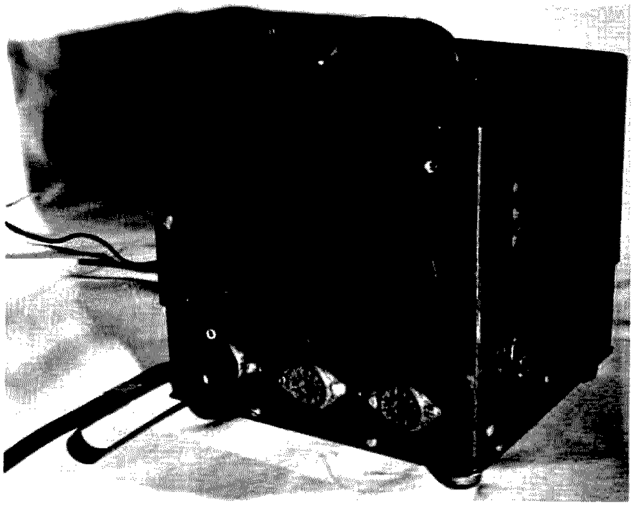

good sync for a Cannon camera (focal plane shutter) at 1/30 of a second (see notes). The sync cord is ordinary zip cord about 15 feet long.

See Fig. 3. The flash heads were assembled with ordinary aluminum reflectors from the local hardware store, mini-boxes, and spring clamps for universal mounting. Trigger transformer T2 gives a very high voltage pulse, so lamp socket SO4 should be the best quality available to prevent arc-over. Sync assembly output to pin three of the lamp socket should be short. The trigger assembly consists of transformer T2 and capacitor C5 mounted on a small printed card with foil and drilled holes to accept diode D5 (not provided with the trigger assembly). The ready light, NE1, is not necessary but is nice to have. If you make more than one flash head, only one needs the ready light. Initial charge time is approximately 10 to 15 seconds, with 5 to 6 seconds between flashes. Juggle resistor R8 to have NE1 flash when the high voltage reaches about 425 volts. Note the jumper between pins 1 and 2 of the flash head socket. This jumper completes the charge path for the capacitors in the power supply section. There is no need to charge the capacitors if the second and third heads are not plugged in.

Remember that the dc voltage on a lightly-charged capacitor reaches 1.41 times the rms voltage of the source. 1.41 times 320 equals approximately 450 volts. The Watt-second rating of each lamp is approximately 70. Ws equals $(E^2C)/2$, which is very good light output.

Safety note: A 700 uF capacitor charged to 450 volts is very dangerous. Be careful.

The lamp cords are 600 V 3-conductor extension cord, about 12 feet long. The case to hold the power supply components can be wood or metal, plain or fancy, as you wish.

To add a third flash lamp, add one more photo flash capacitor, socket, diode rectifier, and protective resistor, and connect the pin 3s of each lamp cord socket together to provide sync to the lamp heads.

A guide number can be obtained by exposing a couple of rolls of black and white film at progressive f-stops and distances, and then noting the results of normal development. Note that, if only one of the two or three constructed lamps is needed for a photo project, it must be plugged into lamp socket no. 1. This unit was intended for studio work and not made very portable, so the size of the components was not a factor. ■

Notes

1. Photo flash capacitors cost about $11.00 each. Q C Components, 8913 Lankershim Blvd., Sun Valley CA 91352.
2. Flash lamps, FT120 GE, cost about $16.00 each. Lamp trigger assemblies cost about $10.00 each. Norman Enterprises, Inc., 2627 W. Olive Ave., Burbank CA 91505.
3. All diodes, about 10 for $1.00. S. D. Sales Co., P.O. Box 28810A, Dallas TX 75228.
4. Focal plane shutters are only wide open at speeds up to about 1/30 sec. to 1/50 sec. Electronic flash pictures made at shutter speeds above about 1/50 sec. will have only part of the film area exposed because shutter aperture is progressively narrow as shutter speed is increased. Between-the-lens shutters close sync contacts when the shutter is

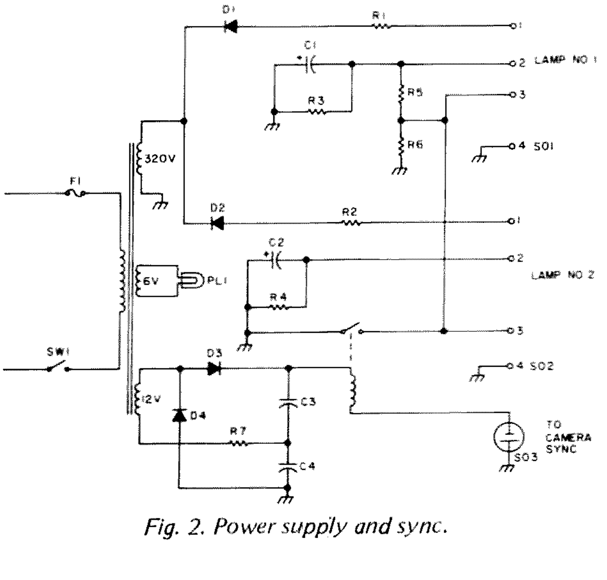

Fig. 2. Power supply and sync.

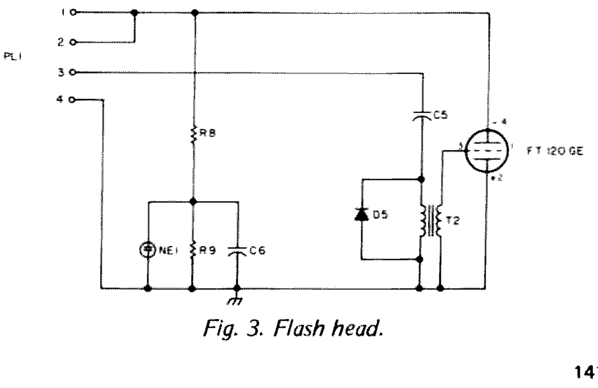

Fig. 3. Flash head.

Parts List

C1, C2	700 uF, 450 volt (photo flash quality)	R5	390k Ohm, 1 W
C3, C4	3 to 4 uF, 50 volt	R6	2.2 megohms, 1 W
C5	.22 uF, 400 volts (part of trigger assembly)	R7	5 Ohm, 1 W
C6	.1 uF, 100 volts	R8	6.8 megohms, ¼ W
D1, D2	1 Amp, 1,000 volts	R9	2.7 megohms, ¼ W
D3, D4	.5 Amp, 100 volts	RY1	Iron Fireman 10k Ohm coil (or equivalent)
D5	1 Amp, 600 volts	T1	Surplus replacement 150 mA min. at 320 volts, 6 V and 12 V.
FL1	FT120 GE	T2	High voltage transformer (part of trigger assembly)
NE1	neon lamp	Misc.	Fuse, switch, sockets, plugs, pilot light, lamp cord, reflectors, miniboxes, ac cord.
R1, R2	320 Ohm, 5 W		
R3, R4	220k Ohm, 2 W		

wide open at X setting. Cameras without sync contacts can be used in the "open flash" configuration. Set the camera to "bulb," open the shutter, fire the flash (a normally-open push-button switch at end of sync cord), close the shutter, all in rapid succession, and the film will be exposed.

5. High voltage can be increased or decreased over a considerable range by using 6-volt or 12-volt windings in series, aiding or bucking the primary winding. Don't use the winding going to sync.

6. Photo flash capacitors should be charged and discharged at 60-day intervals to protect the dielectric film.

7. The FT120 lamp will provide over 10,000 flashes.

8. Photo credits: Barbara Richards, Hopkinton NH.

Social Events

BRIDGMAN MI
MAR 5

The Blossomland Amateur Radio Association will hold the 12th Annual Spring Swap-Shop, Sunday, March 5th, at Bridgman Middle School Gym, Lake St. at Tower, Bridgman MI. Exit 16 on I-94. Large facilities, refreshments, prizes, and fun. Talk-in on 22/82 and 94. Table space restricted to radio and electronic items only. Advance ticket donation is $1.50; tables, $2. Write: John Sullivan, PO Box 345, St. Joseph MI 49085. Make checks payable to Blossomland Hamfest.

STERLING IL
MAR 5

The Sterling-Rock Ralls Amateur Radio Society hamfest will be held March 5, 1978, at the Sterling High School Field House, 1608 4th Avenue, Sterling IL. Indoor flea market restricted to radio and electronic items only. No advance sale of tables — they may be obtained at the door, or you may bring your own ($3.00 for ½ table, $6.00 for full table). Plenty of free parking available, including area to accommodate campers and mobile trailers. Admission: $1.50 advance, $2.00 after Feb. 15th, 1978, or at the door. Write Don Van Sant WA9PBS, 1104 5th Avenue, Rock Falls IL 61071. Make checks payable to the Sterling-Rock Falls Amateur Radio Society. Talk-in 146.94 simplex.

CIRCLEVILLE OH
MAR 5

The King of the Pumpkin Ham Fiesta, sponsored by the Teays Amateur Radio Club, will be held from 9:00 am to 5:00 pm, Sunday, March 5, 1978, at the fairgrounds coliseum in Circleville, Ohio. Indoor flea market, new and used equipment, door prizes, refreshments, and free parking. Tables are available at $3.00 each. Advance admission is $1.00; at the door, $2.00. For advanced reservations and information, contact Dan Grant W8UCF, 22150 Smith Hulse Road, Circleville OH 43113, (614)-474-6305.

FLEMINGTON NJ
MAR 11

The Cherryville Repeater Association will hold its annual hamfest on March 11, 1978. The location this year is the Field House at Hunterdon Central High School, located just north of Flemington, New Jersey, on Route 31. Major equipment manufacturers will be on hand to display their latest equipment. This is an indoor hamfest with over 20,000 square feet of heated area for displays. There will be informative seminars throughout the day on subjects related to amateur radio. Admission for buyers is $2.00 at the door and an additional $1.00 for flea market sellers. Time: 10 am-5 pm.

FT. WALTON BEACH FL
MAR 11-12

The 8th Annual North Florida Swapfest will be held 11-12 March 1978 at Ft. Walton Beach FL. For more information, contact John Lakin W4MMW, Secy., Playground Amateur Radio Club, Box 873, Ft. Walton Beach FL 32548.

GURNEE IL
MAR 12

The Libertyville and Mundelein Amateur Radio Society (LAMARS) will hold its first annual Lamarsfest on Sunday, March 12, 1978, from 9 am to 5 pm, at American Legion Post 711 in Gurnee, Illinois, located at the intersection of Illinois Routes 21 and 132, just east of Marriott's Great America theme park. There'll be lots of free parking, lots of door prizes, and no charge for setups. Tickets are $1.50 at the door, $1.00 in advance. Refreshments will be available from 9 to 5. Talk-ins will be on 146.52 and 146.94. For further information, contact W. H. ("Bill") Stumphy WB9PGQ, 504 W. Hawley Street, Mundelein IL 60060.

EAST RUTHERFORD NJ
MAR 18

The Knight Raiders VHF Club, Inc., will present its auction and flea market at St. Joseph's Church, East Rutherford NJ, on Saturday, March 18, 1978. Doors open at 10 am. Free admission, free parking. Refreshments will be available. Flea market tables: $5.00 for a full table or $3.00 for a half table, *in advance*; or $6.00 for a full table or $3.50 for a half table, *at the door*. Talk-in on 146.52. For further information, call Bob Kovaleski at (201)-473-7113 (evenings only). Send reservations and checks payable to: Knight Raiders VHF Club, Inc., PO Box 1054, Passaic NJ 07055.

MIDLAND TX
MAR 18-19

The Midland Amateur Radio Club will have a swapfest on Saturday and Sunday, March 18 and 19. It will be held in the County Exhibit Building on Highway 80 just east of Midland, Texas. Pre-registration fees are $3.50 per person, and it's $4.00 at the door. There will be door prizes. Please send registration fees to: Midland Amateur Radio Club, Box 4401, Midland TX 79701.

GREENVILLE SC
MAR 18-19

The Blue Ridge Amateur Radio Society will hold its annual Greenville, S.C., hamfest on March 18-19, 1978. The hamfest will be held in the exhibit hall of the Greenville Memorial Auditorium. Free paved parking for 1000 cars in the auditorium parking lot.

JEFFERSON WI
MAR 19

The Tri County ARC hamfest will be held on March 19, 1978, in the Activities Building at the Jefferson County Fairgrounds at the west city limits of Jefferson on Highway 18. A limited number of reserved tables are available for $2.00 in advance. Loads of room for your table. Tickets are $1.50 in advance, $2.00 at door. Extra door prize for advance tickets. Write Glenn Eisenbrandt WA9VYL, 711 East Street, Fort Atkinson WI 53538.

TOLEDO OH
MAR 19

The 23rd Toledo Mobile Radio Association, Inc., auction/hamfest will be held on March 19, 1978, at the Lucas County Recreation Center. Bring your items for sale, and we'll auction them for you at no charge. Hours will be 8 am to 5 pm. Tickets are $2.50 at the door, and $2.00 in advance. Talk-in on 147.87/27; 146.01/61; 34/94; 52/52. For information, write to Box 273, Toledo OH 43696.

CHARLOTTE NC
APR 1-2

The Mecklenburg Amateur Radio Society, W4BFB, will hold its 1978 Metrolina Hamfest on April 1-2, 1978, in Charlotte's new Civic Center. Plenty of parking will be available. The Roanoke Division of the ARRL will hold its annual convention in conjunction with this hamfest.

PITTSBURGH PA
APR 2

The University of Pittsburgh Amateur Radio Association's (W3YI) second annual hamfest will be held on Sunday, April 2, 1978. Festivities will be from 10 am to 5 pm in the Student Union Building across from the Cathedral of Learning. (Note: Meter parking is free on Sundays!) Check-ins on .69/.09 and .52/.52. For detailed information (and a map), send an SASE to the University of Pittsburgh Amateur Radio Association W3YI, Box 304 Schenley Hall, Pittsburgh PA 15260, or call Mark Bell WA3VJL at (412)-931-6700 or Harry Bloomberg WA3TBL at (412)-624-7768.

TOWSON MD
APR 2

The Greater Baltimore Hamboree will be held on Sunday, April 2, at 8 am at Calvert Hall College, Goucher Blvd. and LaSalle Road, Towson MD 21204 (1 mile south of exit 28, Beltway-Interstate 695). There will be food service, prizes, and a giant flea market. Admission charge is $2.50. 250 tables inside the gym and cafe-

Continued on page 149

Tom Rutherford W6NUI
28810 Covecrest Drive
Rancho Palos Verdes CA 90274

Kerchunk Counter

—monitor your repeater's activity

Repeater coordinating committees are faced with the chore of monitoring assigned repeater channels after an interval, to determine if the channel is actually being used. This is difficult to do if the assigned frequency is for a closed repeater and the access method is unknown. For monitoring purposes, all that is needed is some sort of indicator to show whenever the repeater transmitter has been keyed up, even though it may have been turned on momentarily by a "kerchunker" familiar with the access code.

With this in mind, Warren Andreasen WA6JMM was consulted, and he came up with a suggested circuit for an indicating device that was subsequently built and placed into service. Warren is known to most *73* readers for his past articles therein.

This device, which has been named the "kerchunk counter," is merely an event counter which reads out in a row of six LEDs in binary, to a total of 63 counts. On the 64th count, the overflow LED lights, and the entire sequence can be repeated by momentarily closing the overflow switch. At any time between a count of 1 and 63, the readouts can be turned off by momentarily closing the counter reset switch.

The counter is made to operate by connecting pins 8 and 9 of IC1 to ground. This is done by connecting to the relay output of a COR relay, which would have to be installed in the receiver. Methods of connecting a COR relay into receivers have been covered in the literature and so will not be repeated here.

Parts used in this counter are readily obtainable, and the three integrated circuits are common CMOS devices. Layout is not critical, and hand wiring was used, although a printed circuit board would perhaps be easier for the builder to use. This device was laid out on a piece of perfboard measuring about 1" x 4". A piece of double-sided printed circuit board was used as a panel on which the LEDs and switches were mounted. The whole assembly was installed in a plastic cabinet measuring 2½" x 5" x 1½" deep, with the panel fitting on the top.

Three connections are needed to the counter — plus 12 volts, ground, and connection from normally open contact on the COR. The other contact on the COR has to be ground. The plus 12 volts can be obtained from the receiver. To place into operation, turn on the receiver and set to the desired repeater you wish to monitor. Leave the receiver and counter on for as long as you wish, maybe hours or days or even a week or two. Each time you pass by, look to see if one or more lights are on. If more than two or three counts are indicated, then it is to be assumed that the repeater transmitter has been turned on. Just one or two counts may not be proof enough, as random noise or radar could possibly trigger a count or two. On the other hand, a couple of long-winded rag chews over the repeater would indicate only a count of two. Be sure to set the squelch up fairly tight to prevent random noise from triggering a count.

As this device is an event counter, it can be used for purposes other than checking on a repeater operation. It is no doubt used in industry and laboratories for counting operations. At the moment, nothing comes to mind for use of this counter around the home, but there must be something it could be applied to.

With respect to the SCR used in the overflow circuit, this is shown as a type MCR-103, which should be readily available. Any small SCR can be used here, as long as it will light up the LED. ■

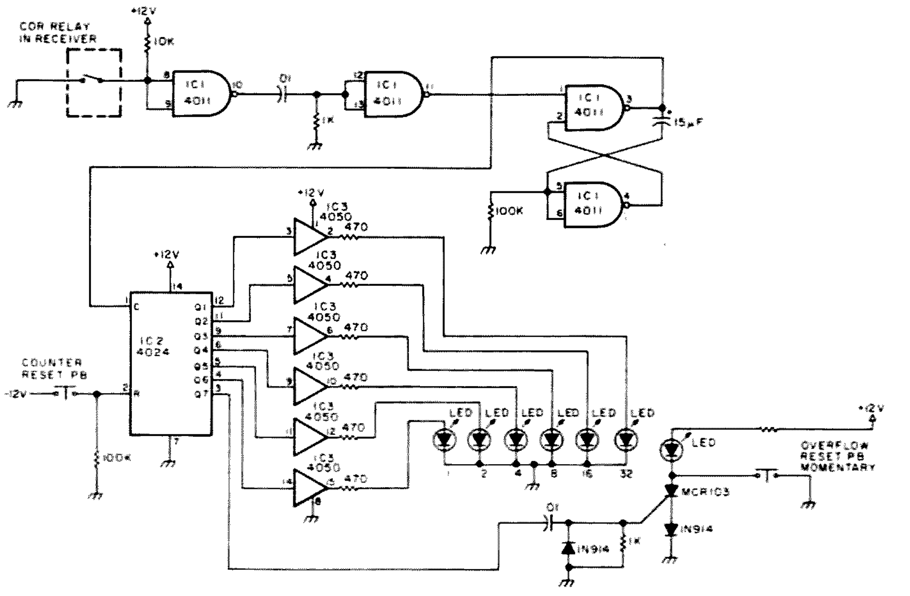

Fig. 1. Kerchunk counter.

Brian D. Kassel W5VBO
3817 Yosemite Drive
Plano TX 75023

The Solar-Powered Ham Station

—one hundred Watts, yet!

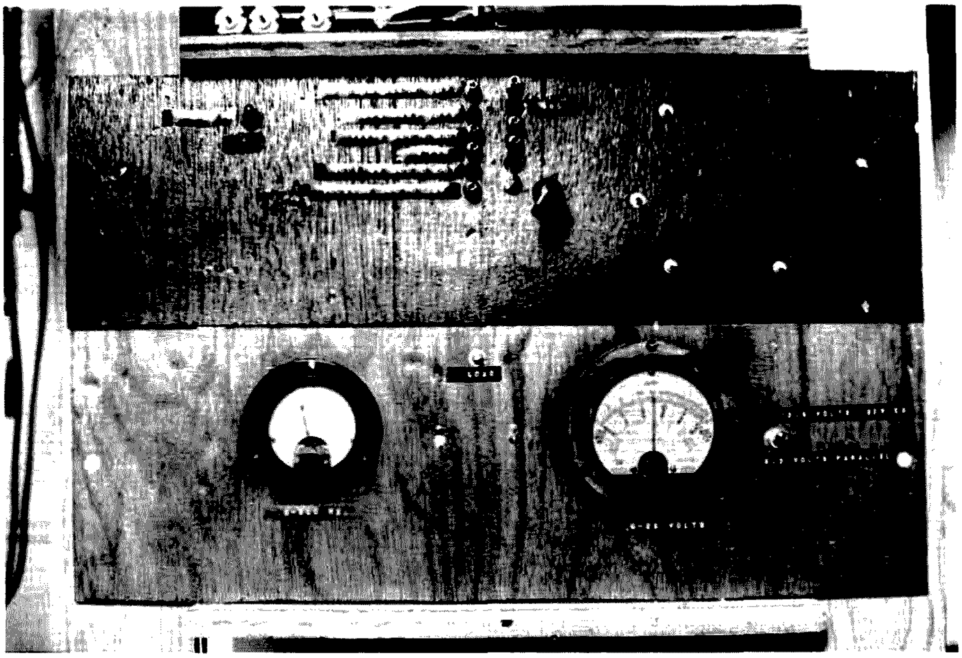

Solar monitoring facilities of W5VBO. The panel is ¼" plywood, clear varnished. The meter on the left is 0 to 500 mA. The meter on the right is 0 to 25 volts. This scale places the normal 12.6 volts nominal at about midscale. Both meters are surplus units with homemade shunts. The series/parallel toggle switch is on the right. At the top of the panel is a 500-Ohm pot used to test the power output of the array under variable solar radiation conditions. The panel above the monitoring panel is the station audio patch panel.

For many years, the idea of completely solar powering a ham station has fascinated me. A few previous articles have described how to use a few low-current cells to power small QRP transmitters in the 1- to 5-Watt class. This article describes a system, in use for almost 3 years at this QTH, which consists of 36 solar cells mounted on a panel, each supplying 500 mA and charging a storage battery.

This setup powers a Ten-Tec Argonaut and 405 linear to the tune of 100 Watts PEP input. This is a power level which is quite adequate for most work on the HF bands. To help you build your own system, this article also includes the basic elements for designing a system for practically any power requirement, but won't get too involved in theory or mountains of data.

The first question one may ask is: "Why use solar cells in the first place? Aren't they terribly expensive?" Well, as will be shown, 36 cells supplying 500 mA each are about right for a 12-volt system powering a 100-Watt transmitter. The cost of the solar system at this writing is $165 for the 36 cells, plus another $20 to $30 for the 12-volt lead-acid storage battery. 12-volt auto batteries are still available on sale for close to $20. On the other hand, an 8-Amp to 10-Amp 12-volt supply costs between $100 and $130. Furthermore, the solar cell system with the lead-acid storage battery still gives several days of operation when no sunlight is available. In times of emergency or disaster, this feature can make your ham rig invaluable. With your ac supply, your shiny expensive rig is of little more value than a paperweight during a power failure.

The two main reasons usually given to justify ham radio's existence are:

1. Communications capability in times of disaster.

2. Advancement of the state of the art.

Aren't both of the above criteria fulfilled with solar power?

Before looking at the solar power side of the system, though, we need to first look at the other side: How much power do you require? This depends on 2 main factors:

1. How much do you operate?
2. Ratio of listen time to transmit time.

In my station, I find that the rig is turned on 20 to 30 hours a week. Of that time, only about 20%, or 2 to 3 hours, is actually transmitting time. This, of course, is far from key-down conditions. In the CW mode, maybe 50% of the time is actually key down. In the SSB mode, probably roughly the same percentage exists. Since the Argonaut/linear draws about 300 mA on receive and about 8 Amps key down, we can make a rough estimate of how much power, or Amp-hours (Ah), are actually consumed. Using somewhat worst-case conditions, we come out with:

30 hours x .3 A = 9 Ah

(50% of 8 A = 4 A)
3 hours x 4 A = 12 Ah
21 Ah

This means 21 Amp-hours per week are drawn from the storage battery. It happens that two 6-volt, 150-Ah batteries are used at this station, giving 12 volts and 150 Ah each. This works out to 150 Ah/21 Ah = 7.01, or about 7 weeks of normal operation with no charge from the solar cells. This is probably too much storage capacity, but the two 6-volt batteries were obtained almost brand new at very little cost, so they were placed into operation. Besides, this leaves a lot of reserve power available for contests and/or long periods of overcast days.

This brings us to the storage system. Although the more efficient nicad batteries can be used for storage, they become very expensive to use at this power level. They are, however, ideal for small QRP setups. Thus, lead-acid batteries are used in my system.

A 12-volt lead-acid battery (or two 6-volt batteries in series) should be charged to around 14 to 15 volts.

Now, knowing approximately how much power we are going to extract from the system and at what voltage, we can make a pretty good estimate of what size solar battery is required.

Since one solar cell produces between .4 volts and .55 volts in full sunlight, regardless of rated current output, let's talk about the

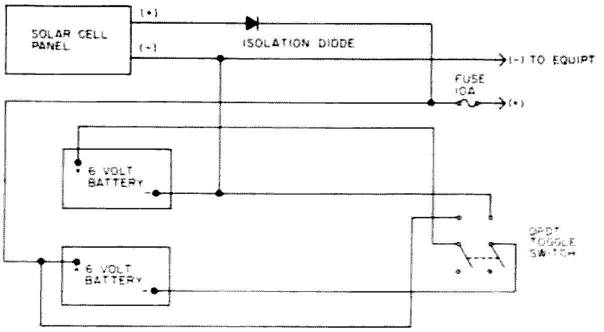

Fig. 1. 6 V to 12 V switch wiring. All wiring is #10 or larger.

number of series-connected cells we need. With a 12-volt system charging at 15 volts and each solar cell generating .4 volts, we end up with 15/4, or 37 cells required. Since price breaks exist for even dozens of cells ordered, 36 cells would be adequate.

We are just about done designing, except for one last little bit of arithmetic – the current rating of each cell required to keep the storage battery up to snuff. We can really get very involved here because many, many variables exist. Some of these are the season of the year, latitude, and even, to some very slight degree, temperature. In keeping with our rule-of-thumb approach, let's keep it simple and dive in. Using my setup again as an example, we found that 21 Ah per week were removed from the storage battery. So, naturally, we've got to replace this amount of power plus some, due to the lead-acid battery being less than 100% efficient. In fact, 60% to 75% efficiency is what I seem to get. So, being conservative, let's use 60%, which means we'll lose 40% in the chemical-to-electrical conversion processes of the lead-acid battery. Therefore, 21 Ah x .4 = 8.4 Ah. Then, 21 Ah + 8.4 Ah = 29.4 Ah per week. Disregarding the periods of overcast days, night, dusk, and dawn, about 4 to 5 hours per day can be expected to produce the rated output of our solar battery. So 7 days per week x 4 hours = 28 hours per week charging time. At 29.4 Ah per week required, this means we finally end up with 28/29.4, or about 1 Amp rated solar cells.

So much for theory. We can get quite a bit more actual charging time by using a simple technique. During periods of low solar radiation (dawn, overcast, dusk, etc.), the solar cell output voltage will be something less than the storage battery voltage. This means no current will be drawn, and, therefore, no charging takes place. If we

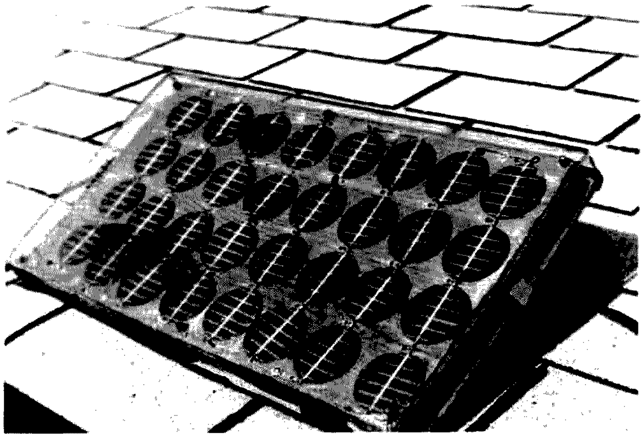

Solar cell array mounted on the roof. The dimensions are 24" x 12". These photos show my original 32-cell system. I later added four more cells to make the system described in the text.

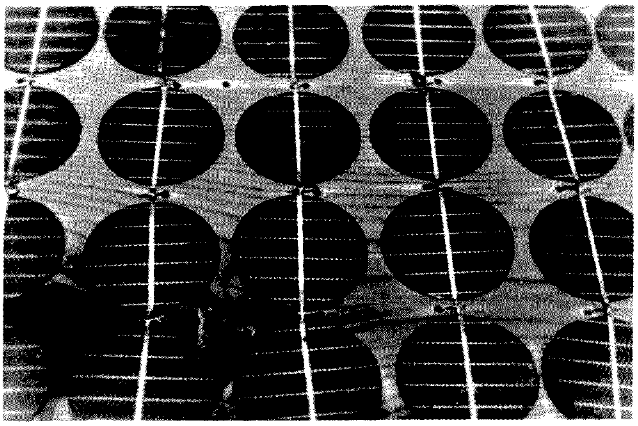

Central view of solar cell array.

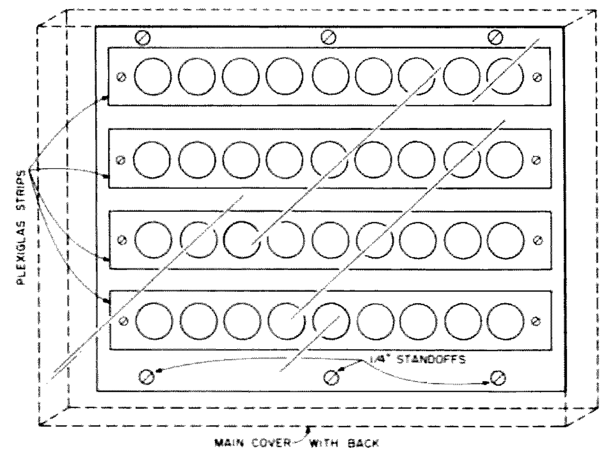

Fig. 2. Solar cell enclosure. The four horizontal Plexiglas™ strips are attached to the mounting board with wood screws. Six ¼" standoffs secure the main Plexiglas cover. Epoxy glue is used to bond the sides and back of the main cover.

use two 6-volt batteries hooked in parallel, the solar cells will give us 6 volts or more, much more of the time, than 12 volts. So in my installation, two 6-volt batteries, hooked up with a DPDT switch, as shown in Fig. 1, are used. When the rig is not turned on, the switch is thrown to parallel. This enables much more charge to be delivered to the storage battery when I'm at work during the day, 5 days a week. Since most hams operate by night and work by day, except for weekends, this scheme should work out quite well for most fellows. So well, in fact, that at this QTH, as mentioned before, 500 mA cells are used and work out very well under the operating conditions outlined.

Remember that solar cells can be connected in series (for more voltage) and in parallel (for more current), just like storage-type batteries and cells. If you find that because of lack of sunshine, or because more current is consumed than you had planned, your storage battery loses more power than is gained, take heart. Another bank of like cells can be added at any time, doubling the current output. Of course, there's always the dastardly unpure approach of occasionally hooking up an ac charger to take up the slack, but, to me, anyway, it seems better to limit operating activity than to give in! At this station, however, this has never been necessary.

Another gimmick you can use to squeeze out a little more juice is the isolation diode. This is required to keep the storage battery from feeding power to the solar battery during times when the solar battery's voltage output is less than the storage battery. If a silicon diode is used, .6 to .7 volts will be lost across the diode. This almost represents 2 solar cells! Therefore, a germanium diode is used, keeping the loss to about .3 volts. Actually, I used a power germanium transistor, hooked up as a diode, with a heat sink. Just make sure, of course, that the transistor or diode is capable of handling the full current and voltage output of the solar cells.

Solid State Sales
P.O. Box 74-A
Somerville MA 02143

Edmund Scientific Co.
300 Edscorp Building
Barrington NJ 08007

John Meshna
P.O. Box 62
E. Lynn MA 01904

Poly Paks
P.O. Box 942-E
Lynnfield MA 01940

Table 1. Distributors of solar cells.

Ok, now we have our cells selected, bought, and hooked up to our storage battery (at least on paper). Although many cells have a clear weatherproof finish sprayed on, we still really need to protect them in some kind of transparent enclosure. Fig. 2 shows how I did it. As long as it's really weathertight, just about any design can be used. Some manufacturers even sell complete solar batteries, all enclosed and ready to hook up to your storage system. Building your own will save you a bit of money, however.

The completed unit should be mounted facing the south, and inclined from the hori-

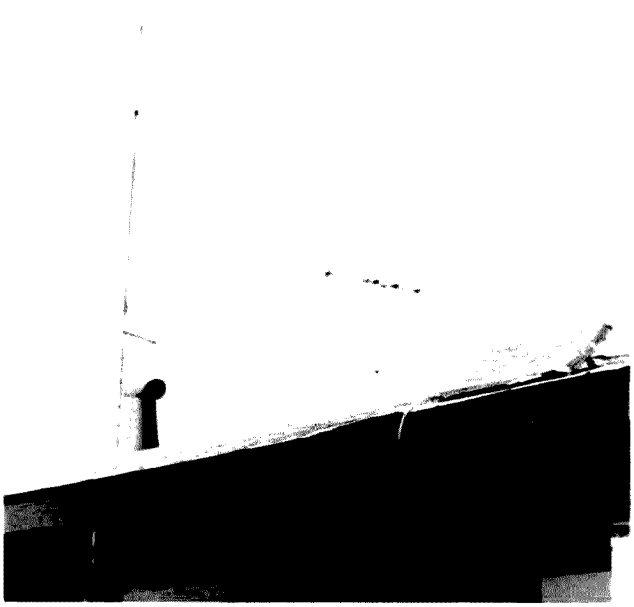

The multiconductor cable hanging from the left of the solar cell array is used to measure individual cell output, if desired.

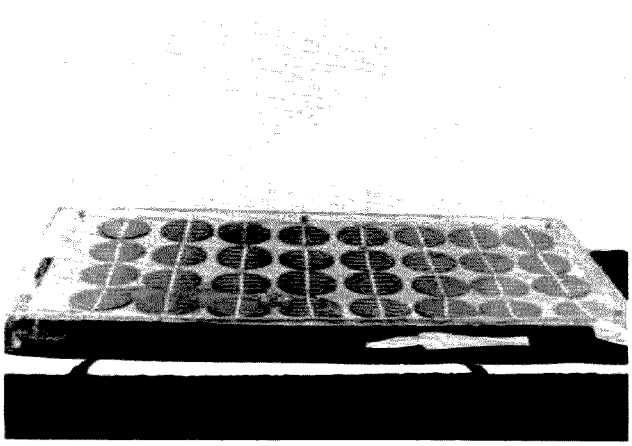

Solar cell array, front view.

zontal about the same number of degrees as your latitude. This dimension is by no means critical; 10° either way has only a slight effect.

You'll probably want to monitor voltage and current independently. I used two very cheap 3" surplus meters with my own shunts to give me 500 mA and 15 volts full scale.

Operation of the system is quite easy and almost maintenance-free. When using the 6/12-volt system, flip the switch each night to series to make sure the batteries are not over 15 volts, as this will indicate that the batteries are overcharging. This condition will shorten the life of the storage battery. Make sure that the storage battery has plenty of water, but do not overfill it. If you have a long time without rain, you might want to spray your garden hose up on the surface of the enclosure to make sure it is fairly clean. Also, don't mount the storage battery in an enclosed area, as hydrogen gas is given off and this gas is very explosive (remember the Hindenburg). Since heavy charges and discharges do not take place, not much gas is given off, but better safe than sorry!

Apart from ecological and disaster communication advantages, when I mention that I am running a completely solar-powered 100-Watt station on the air, the conversation almost never dies with a weather report! Opinions range from pessimism to euphoria to disbelief, but there are always opinions!

Lastly, watch out for the solar power "bug." Several pessimistic hams who have seen the setup have found themselves caught up with the same strange fascination I have — watching the current meter wave up and down as the sun passes behind and out of cloud banks. Whoever thought a power supply could be fun? ■

Social Events

from page 142

teria. Over 2000 attended last year. For information and table reservation, contact Bro. Gerald Malseed W3WVC at the school or call (301)-825-4266.

COLUMBUS GA
APR 8-9

The Columbus Amateur Radio Club will hold its annual hamfest on April 8-9, 1978, at the Columbus Municipal Auditorium at the fairgrounds. Spacious, air-conditioned exhibit area, prizes, flea market, Saturday night banquet, FCC exams, and a luncheon will be featured. For further information, please contact Eddie Kosobucki K4JNL, 5525 Perry Ave., Columbus GA 31904.

MADISON WI
APR 9

The Madison Area Repeater Association's 6th annual swapfest will be held, rain or shine, on Sunday, April 9, 1978, at the Dane County Expo Center Youth Building, Madison WI. Electronic equipment and components for hams, computer hobbyists, and experimenters. Delicious food, free movies, arts and crafts — Bring the whole family for delicious food and entertainment. Tickets are $1.50 in advance, $2.00 at the door. Tables are $2.00 in advance, $3.00 at the door. Excellent overnight camping accommodations. Make check or money order payable to MARA, Box 3403, Madison WI 53704. Reservations must be in by April 1, 1978.

NEWINGTON CT
APR 9

The Pioneer Valley Repeater Association (PVRA) flea market and auction will be held on Sunday, April 9, 1978, from 10:00 am to 5:00 pm at Newington High School, Willard St., Newington CT. Setup time starts at 9:00 am. This is an event for everyone. There will be planned family activities, food available, and free parking. The flea market and auction will run simultaneously in separate rooms. The auction will be held at regular posted intervals, with all items to be sold at each time slot on display before each auction. The ARRL Club and Training Department will have a Novice information booth to answer questions and provide League information. A guided tour of the League's new headquarters building will start at 2:00 pm. Those planning to take this tour should drop Arnie K1NFE a note indicating how many will be in their party. Talk-in will be on 19/79, 04/64 and 52 simplex. Admission will be $1.00, tables $5.00, and auction commission 10%. For additional information and guaranteed flea market space, contact: Arnie DePascal K1NFE, 20 Iowa Pl., Bristol CT 06010.

ROCHESTER MN
APR 15

The Rochester Repeater Society will hold its hamfest on April 15, 1978, at St. John's Grade School, 420 West Center Street, Rochester, Minnesota. Doors open at 9:00 am. Door prize donations $1.00; admission $1.00; children under 12 free; $2.50 for tables. Plenty of parking available. Talk-in on 146.22/82 WRØAFT and 52. Take I-90 to Rt. 52 or Rt. 63 and go north. For advance ticket sales and information, contact Joe Fishburn KØTS, 2514 4th Avenue, N.W., Rochester, Minn. 55901, (507)-288-2676, or Gary Sharp WD8AMA, 1610 34th St., N.W., Rochester, Minn., (507)-282-5119.

MOBILE AL
APR 15-16

The Mobile Amateur Radio Club will hold its annual hamfest and computerfest at the University of South Alabama in Mobile AL on Saturday and Sunday, April 15 and 16, 1978. Swap and shop indoors both days from 9 am 'til 5 pm. Activities for the ladies and children. Campsites are available. Over 2000 are expected for the biggest fest on the Gulf Coast. For more information, contact: Ed Coker WA4VPI, 7650 Ashley Court, Mobile AL 36619.

POMONA NJ
APR 16

The Shore Points Amateur Radio Club will hold its first annual hamfest on Sunday, April 16, 1978, at Stockton State College, Pomona NJ. It will be from 9 am to 4 pm, rain or shine (sellers come at 7 am). There will be more than 200 indoor table spaces ($4 each) and 400 tailgating spaces ($2 each), an auction at 3 pm, food, a picnic area, and seating. Free parking for 1000 cars and spotless restroom facilities. The many great prizes will include a Wilson HT as the grand prize and lots more. There will also be new gear from professional dealers. Registration is $1.50 at the gate, $1.00 in advance. Children under 12 free. Make advance checks payable to SPARC. Advance sales space registration for indoor area only. Talk-in on 146.34/94 WR2AFL/SPARC, 146.52 WA2ESD. For information and tickets, write SPARC, P.O. Box 142, Absecon NJ 08201 or phone (609)-641-8795.

MONTGOMERY AL
APR 22

The Alabama Forestry Festival will be held April 22, 1978. The Twin Base Amateur Radio Club station WA4PRY will be operating on site in conjunction with the Alabama Forestry Festival at the State Fair Grounds, Montgomery, Alabama. Any ARS completing a two-way contact will receive a special certificate in exchange for a QSL card and SASE. Operations will be conducted from 1600 hours to 2300 hours UTC on frequencies 14.300 MHz and 3.950 MHz normal SSB; slow CW (5 to 10 wpm) on 7.125 MHz during even hours UTC and 21.150 MHz during odd hours UTC. QRM frequency adjustments will be up band. For more information, contact Bruce W. Mertz WA8K1H/4, President, Twin Base Amateur Radio Club, CMR Box 9748, Gunter AFS AL 36114.

GRIFFITH IN
APR 22

On April 22, 1978, the Lake County Amateur Radio Club will hold its Silver Anniversary/Herbert S. Brier Memorial Banquet at the Griffith Knights of Columbus Hall, 1400 S. Broad St., Griffith IN.

The evening begins at 6:00 with a cocktail hour, followed by a delicious family-style "all you can eat" dinner.

Guest speakers will be the Central Division director of the ARRL, Mr. Don Miller, and Chicagoland's famous radio personality, Mr. Clark Weber W9FFM/WIND.

The door prize list will feature a Wilson Mark II 2m hand-held transceiver, calculators, and gifts for the entire family. Special awards and the "Ham of the Year" award will also be presented. Two hours of dancing to music as you like it will conclude the evening's entertainment.

Tickets are $8.00 each in advance — no door purchases. Make check payable to LCARC. Write to Joel G. Iacono WA9DJP, 634 Osage Dr., Dyer IN 46311.

SULLIVAN IL
APR 23

The Moultrie Amateur Radio Klub's 17th annual hamfest will be held on Sunday, April 23, 1978, at Wyman Park, Sullivan IL. There will be a heated indoor and outdoor flea market at no charge to vendors. For information, write: Box 327, Mattoon IL 61938. Talk-in on 146.94.

DAYTON OH
APR 28

The 9th Annual FM B*A*S*H will be held on the Friday night of the Dayton Hamvention, April 28, 1978, at the Dayton Biltmore Towers Hotel, Main at First Streets, from 8 pm until midnight. Admission is free to all hams and their friends. Sandwiches, beverages, snacks, and COD bar will be available. A live floor show will be presented by TV personality Rob Reider WA8GFF and his group. A fabulous prize drawing featuring a complete Drake UV-3, including 144, 220, and 440 MHz synthesized modules, power supply, encoder mike and antenna, plus many other prizes will be held. Winner of the first prize need not be present. For further information, contact: Miami Valley FM Assn.,

Continued on page 167

Bill Hosking W7JSW
8626 E. Clarendon
Scottsdale AZ 85251

A Cheaper Chip

Until Intersil joined the ranks of IC manufacturers producing touchtone™ encoder integrated circuits, most of my experience had been with the Motorola IC which uses a 1 MHz crystal and normally sells in the $8 to $10 price bracket. When Intersil entered the market, I immediately became interested in the Intersil chip. I had learned that it was selling for about $2 less than the Motorola and that it used a 3.58 MHz color TV crystal, which is about a dollar less than the 1 MHz variety.

Intersil is making two versions of the IC – the ICM7206 and the ICM7206A. Most of us who are using readily available switches such as Chomerics or Bowmar will want the 7206A, since that matches their type of switch contacts.

Circuits

I will only go into device operation in the barest detail, since I'm not an IC engineer, and it's the end result that counts anyway. The device requires one switch closure each for a row and a column to generate a digit tone. The switch closure is to the plus supply line. The chip requires a 3.58 MHz crystal, which is readily available at most supply houses. The only other basic components required are two capacitors to filter the high and low group tones and reduce harmonic distortion.

The basic circuit is shown in Fig. 1. I have shown pin 16 connected to diodes going to the column inputs. This is to conserve power drain when not sending tones. In many applications, this would not be necessary; the device would be connected directly to the supply, and the diodes would be eliminated. Also, the 78L05 regulator is optional, but, if it's not used, a zener should be placed in series to keep the voltage across the IC to less than six volts. There is not really any more to say, except to remind those of you used to working with the 14410 that the 7206A switch common is the plus supply instead of the minus (ground) side.

I also wanted a portable tone generator so that I could control my repeater from my office, which does not have touchtone phones. With this in mind and an MC1306P in hand, I built an audio amplifier out of the *Motorola Linear Handbook*. The circuit is shown in Fig. 2. You remember that I said I wanted this portable. I wanted to put a nine-volt transistor battery in it and not need an on/off switch. The diodes I mentioned earlier will take care of turning the device on, but I still had to turn on the audio amplifier.

Intersil helped solve the problem by providing a pin out, which they call "dis-

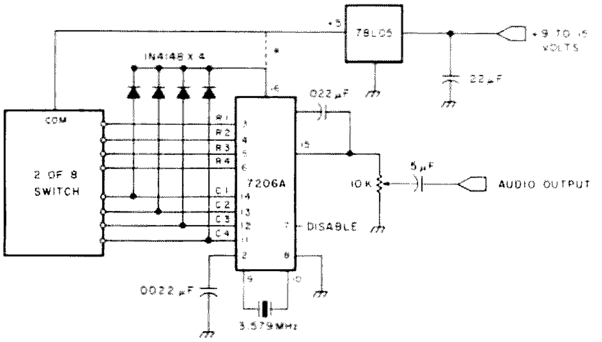

*Fig. 1. Schematic diagram of the basic tone encoder. None of the parts are critical, and the .22 uF at the input of the 78L05 could probably be left off if space is a problem. Pin 7 is a switch output, which Intersil calls "disable"; it can be used for turning on an audio amplifier. *If a couple mA of standby current can be tolerated and battery operation is not required, the diodes can be eliminated and pin 16 connected to +5.*

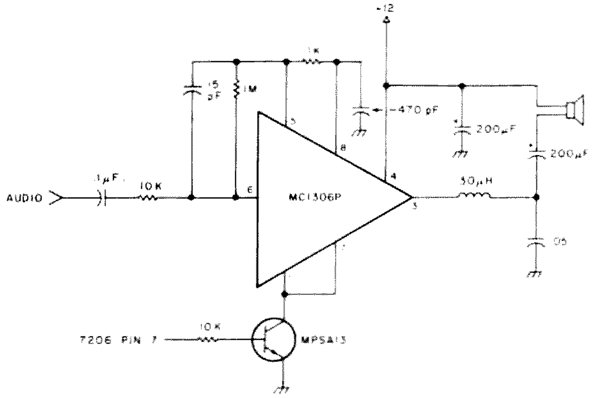

Fig. 2. Schematic diagram of the audio amplifier. If this current is to be connected to the circuit of Fig. 1, leave out the .1 uF coupling capacitor.

able." This pin goes from ground to plus supply voltage when any of the keyswitches are closed. Therefore, I just used that pin to turn on a transistor which grounds the audio amplifier. Notice that I have called out an MPS-A13 transistor for that switch. I did that since it is very high gain and it doesn't take much current to turn it on.

I built up an encoder with this circuit and enclosed it in a box with a Digitran keyswitch.

Construction

The circuit is so simple that point-to-point wiring is easy to do. I do like circuit board construction, however, so I am preparing two different printed circuit boards. One will be about ½ inch wide and 2¼ inches long to fit in hand transceivers. The other board, about 2" x 3", will contain the encoder plus audio amplifier. These boards will be available from CONTACT Electronic Research and Development, 35 W. Fairmont Dr., Tempe, Arizona 85281. Since we don't have the boards in production as of writing time, you will have to write for prices.

Also, at the time I wrote this, it took me about two weeks to get the 7206A from the manufacturer. If I haven't seen any of the usual advertisers listing it by the time this gets into print, I will try to get some and have them on hand to sell along with the boards. ■

Karl T. Thurber, Jr. W8FX/4
233 Newcastle Lane
Montgomery AL 36117

The Go Pro HT Mod

—adding a telephone handset to your HT

For most amateur applications, the standard mobile mike and speaker combination is almost ideal, with one possible drawback being the fact that one hand is always required to hold the microphone and operate the push-to-talk switch.

Occasionally, however, the telephone handset would be the preferred instrument, offering some degree of privacy, and, for those interested in "image," the handset is rather impressive and readily identifiable as a bona fide two-way radio-telephone installation — assuming such identification is desirable. The telephone-type mike-and-speaker handset can help to eliminate background noise on transmission and allows reception of messages clearly and privately, even in high-noise locations.

The earpiece or "receiver," in telephone company jargon, is designed for low-impedance applications and will usually work quite well with most hand-held or mobile transceivers without modification. However, the carbon element generally used in the mouthpiece or "transmitter" unit is incompatible with the low-impedance dynamic mike input found in the vast majority of contemporary solid state equipment. Specially-manufactured handsets, designed for CB and amateur use alike, are available but expensive, running $40-50 and more.

The typical telephone-type handset can be readily adapted to amateur use by replacing the carbon element with a low-impedance replacement-type dynamic microphone element and installing a miniature, momentary-on SPST push-button PTT (push-to-talk) switch in the handset, as shown in Fig. 1.

On the surplus market, I found a new Western Electric #G3A4W handset for $3, though I could have used any similar unit. A Radio Shack #270-093 dynamic mike element, having a nominal impedance of 600 Ohms and an output level of -65 dB, was easily installed by drilling out a 5/8"-diameter hole in the plastic mouthpiece, fitting a large rubber grommet into the hole, and inserting the mike element into the grommet from the inside. I epoxied the grommet and mike element firmly into place.

The handset must be rewired. Of the four coiled-cord wires coming from the handset, one is selected as ground or common and is connected to the mike and receiver element as ground. A second lead is connected to the ear-

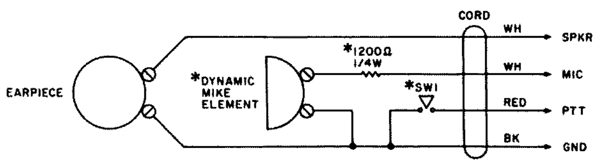

*Fig. 1. Modified handset (Western Electric #G3A4W or something similar). *Added parts. The carbon element is discarded. The dynamic mike element is Radio Shack #270-093 — 600 Ω nominal impedance.*

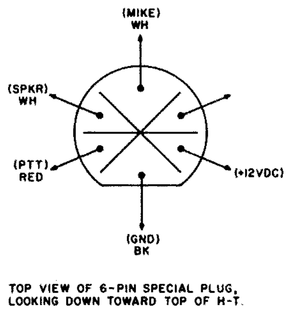

Fig. 2. Wilson HT accessory plug. (For proper pin connections on your transceiver, check the instruction manual and schematic diagram.)

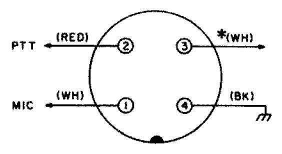

*Fig. 3. IC-22S mike plug. (For proper pin connections on your transceiver, check the instruction manual and schematic diagram.) *Pin 3 is presently unused. Run wire from pin 3 to the "hot" audio lead on the external speaker jack on the rear apron of the IC-22S. (The speaker audio can be muted if a miniature phone plug is inserted.)*

phone "hot" terminal. A third lead is connected, through a series resistor, to the mike "hot" terminal. The fourth lead becomes the PTT bus.

A miniature, momentary-on, normally-open push-button switch is mounted behind the mike element, a ¼" hole being drilled into the back of the mouthpiece cavity, as shown in the photo. For most transceivers which simply ground the PTT line for transmit, the switch should be connected between the coiled-cord "hot" PTT lead and ground. No hum or interaction problems have been encountered despite the fact that the coil is unshielded, due primarily to the low impedances involved and the fact that, during transmit, two of the four wires in the cable are at ground potential, forming a shield of sorts around the mike lead. Of course, a shielded cable (3 conductor plus the shield) could be used, if one is available or if hum and noise pick-up prove to be a problem.

Initial on-the-air checks indicated that the audio was somewhat bassy and muffled, apparently the result of a slight impedance mismatch between the 600-Ohm microphone element and the 2000-Ohm mike impedance of the Wilson HT. A little experimentation resulted in the addition of the 1200-Ohm, ¼-Watt resistor in series with the mike element. Use of the series resistor removed most of the bassy quality of the audio when using the handset. The exact value of resistance to use in any particular installation will depend on the mike input impedance you're trying to match and will have to be determined by trial. If the mismatch isn't too great, the resistor may be eliminated altogether. And, although I have not used the handset with a high-impedance input transceiver (such as the Heath HW-202 or HW-2036), it probably could be adapted for use by mounting a subminiature low-to-high impedance matching transformer of the type sold by Lafayette Radio and Radio Shack in the mouthpiece cavity (yes, there's enough room, providing an ultrasmall transformer is used!). No adjustment of the deviation on the Wilson was required, though deviation might have to be touched up when used with some transceivers.

The type of connector or connectors used at the other end of the coiled cord will, of course, depend on the type of transceiver used and its mike jack pin wiring. Fig. 2 shows the pin connections for use with the Wilson 1402SM Handie-Talkie, which was the unit I used. Fig. 2 shows typical connections for use with the Icom 22S or similar transceiver using the standard CB-type four-pin mike connector. For proper pin connections on your transceiver, check the instruction manual and schematic diagram provided with the unit. Addition of a hang-up bracket, which came off an old junk box mike, to the handset completes construction.

I have modified my Wilson HT to include a miniature closed-circuit phone jack for external headphones and/or speaker. The phone jack is wired such that installing a dummy miniature phone plug into the jack disables the internal speaker so that audio is routed exclusively to the handset, affording private listening, particularly handy in the high-noise areas likely to be encountered when using the HT. In the case of the Icom, to avoid extensive internal transceiver rewiring, the unused pin on the front panel microphone jack is connected to the rear panel external speaker jack to route receiver audio to the handset, as shown in Fig. 3. Inserting the miniature phone plug into the auxiliary speaker jack disables the Icom's internal speaker.

One precaution: As the mike element is exposed, care should be taken to prevent foreign particles (dirt, dust, etc.) from getting into it. If desired, a small piece of fine speaker grille cloth can be cemented over the element to protect it.

On-the-air results have been gratifying, particularly considering the very low cost of modifying the handset when compared with the cost of a similar commercially-available unit and the minimum of transceiver modification required. Construction cost is less than $8, plus the cost of the mike connector. ■

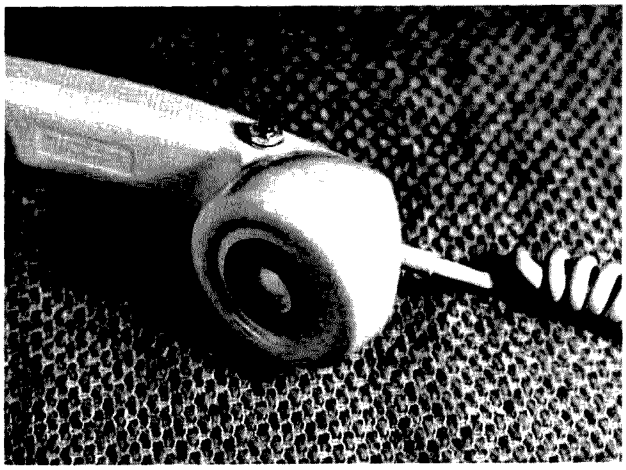

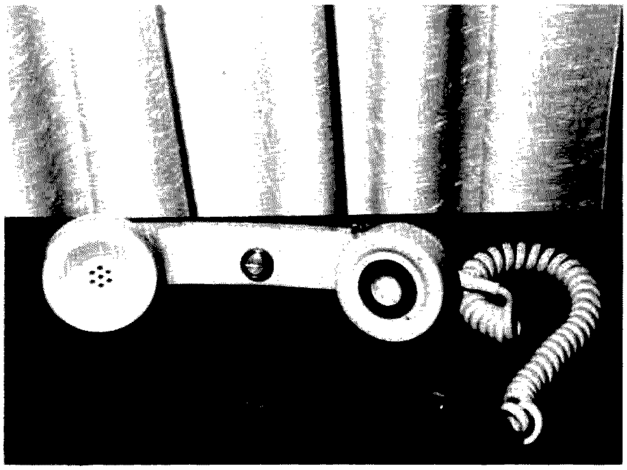

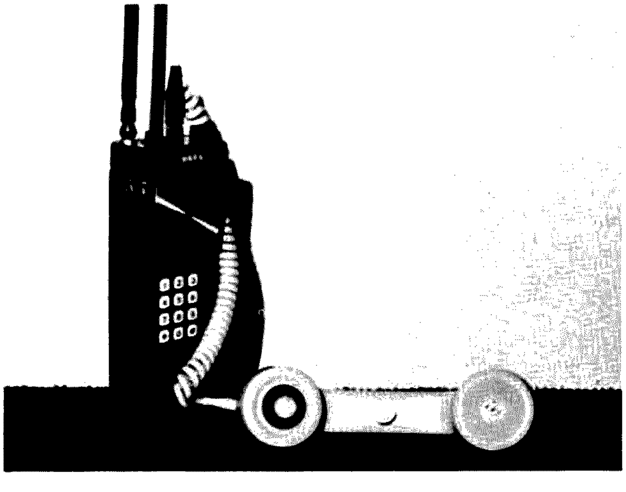

Douglas E. Marquardt WB2AWG
294 Larch Avenue
Bogota NJ 07603

A 2m Antenna For The Perfectionist

—*with considerable details*

Having recently received my Technician license, I started my ham station with a 2 meter Heathkit 202 transceiver. I decided to build my own aerial and, after comparing the many different 2 meter aerial designs, settled for the vertical 5/8-wavelength ground plane antenna. This setup gives a power gain of almost 3 dB, as opposed to the 1/4-wavelength vertical, and is easy to construct, allowing omnidirectional communication.

Many articles have been published in amateur journals on antenna construction, but many just supply cookbook construction recipes, often without telling you how the various measurements of wire, etc., were obtained. Furthermore, you are at the mercy of the author's parts list. Because of this, I designed my own 5/8 antenna and, through the equations presented here, modified my construction to go with the materials I had on hand. You, too, can build this (design it) around *your* junk box, modifying things to suit your own list of materials for construction.

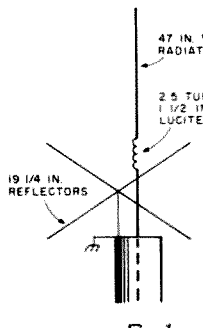

Fig. 1.

Where the Numbers Come From

Since $1/2\ \lambda = 468/\text{fMHz}$,[1] by simple ratios, $5/8\ \lambda = 585/\text{fMHz}$. For 147 MHz, $\lambda = 3.979$ ft. or 47.75 in. This is the vertical radiator length.

The ground plane reflectors are $1/4\ \lambda$ at the lowest frequency.[1] Since $1/4\ \lambda = 234/\text{fMHz}$, for 147 MHz, $1/4\ \lambda = 1.5918$ ft. or 19.1 in. This is the horizontal reflector length.

Since we are matching the antenna to an RG-58/U coaxial cable (transmission line), we need a loading coil to match this impedance (approximately 52Ω). Then $X_L = 52\Omega$, or, at 147 MHz, $X_L = 2\pi\ (\text{fMHz})(L) = 52\Omega$; $L = 52\Omega/2\pi\ (147\ \text{MHz}) = .05629$ uH. Note: Make the coil inductance .06 uH to allow for trimming.

Using the equation for a free-air solenoid coil, $L = a^2 n^2/9a + 10b$, where a = coil radius in., b = coil length in., n = coil turns/b. Solving for n: $n = \sqrt{L(9a + 10b)}/a^2$.

Here is where one can modify the coil to any desired specification. Since I had a lucite rod of a = .75 in. and b = 2 in., my design proceeded with n being calculated to equal 2.25 turns/2 in. Again, for adjustment and trimming, I made n = 2.5 turns/2 in. and picked #14 AWG enameled copper wire for the coil, although almost any large gauge wire will do (10-15 AWG).

My design followed that shown in Fig. 1. Construction is not critical, since final trimming gives the lowest swr. Incidentally, adjustment of the coil will compensate for slight variations in the radiator length, but don't exceed the calculated maximum value.

Construction

Since construction is not critical, parts are either your own junk-box variety or those listed in the parts list.

The construction of the

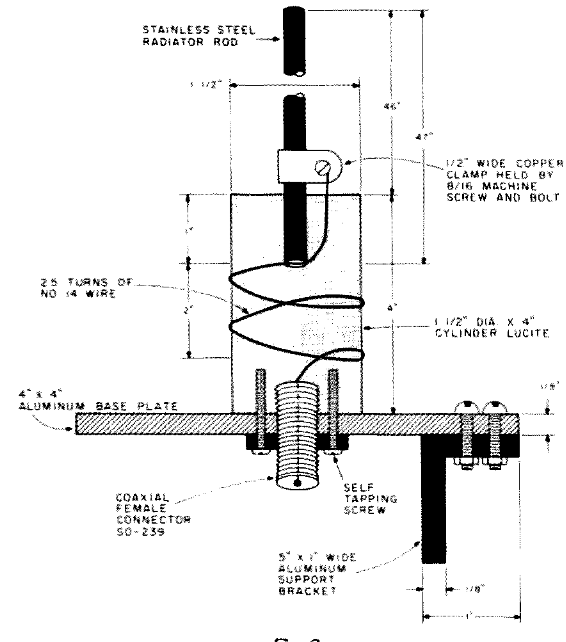

Fig. 2.

antenna is shown in Figs. 2 and 3. Details of the construction will not be given here, since construction always depends on materials on hand and the ingenuity of the person doing the building. However, complete details of this construction and parts availability will be gladly furnished on request.

Tuning

I used a Clegg FM-DX 2m transceiver for final tuning and a Heathkit HW-2102 VHF wattmeter to adjust the antenna to the lowest swr. Tuning was accomplished by adjusting the spacing between the coil windings until an swr of about 1:1 was obtained. In some cases, 1/2 to 1 turn of the coil wire may be needed to be added or subtracted from the original coil winding to achieve the lowest possible swr.

In a ground plane installation, the position of the reflectors will affect the swr obtained. Therefore, if necessary, the reflectors may be bent down at about a 45° angle and slowly moved upward to again obtain the lowest swr reading possible.

Final Comments

In my construction, it turned out to be unnecessary to bend the reflectors down on an angle. Also, a clear dope was used to seal the coils in place, once they were adjusted for the lowest swr reading.

As I originally stated, the main purpose of this article was to show you where some of the numbers came from in the design of a 5/8-wavelength antenna. Thus, this allows you the freedom to modify the design to the materials you have at hand. ■

References

[1] *ARRL Handbook*, 1975.

[2] "A 5/8 Wave Vertical For 2," Herbert S. Brier W9EGQ, *CQ*, February, 1964.

[3] "5/8 Wavelength Vertical Antenna For Two Meters," Ed Spadoni W1RHN, *Ham Radio*, March, 1976.

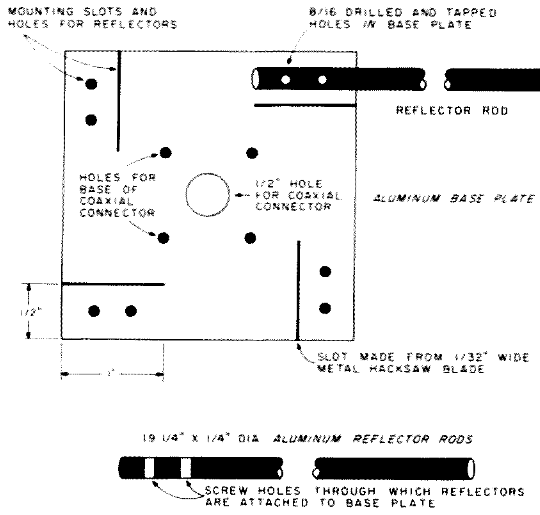

Fig. 3.

Parts List

1	47" stainless steel rod for the vertical radiator (or ¼"-diameter aluminum rod)
4	19¼"-long x ¼"-diameter aluminum rods for the reflectors
1	4" x 4" x 1/8" base plate of aluminum
1	1½"-diameter x 4"-long rod of lucite (or equivalent)
	#14 AWG copper enameled wire
1	female SO-239 coaxial connector
	assorted self-tapping screws
1	5" x 1" x 1/8" aluminum support bracket

Joseph Verzi, Jr. W4RYO
Box 102
Brucetown VA 22622

Are You Afraid To Build?

—how to get organized . . . and started

Whatever the experimenter looks for today, it will involve electrical hookups in most designs.

The best way to start on constructing new circuits is to be organized. You'll save time and be ready for any testing, data gathering, and diagramming you need to do for your own record. Breadboards can also add to efficiency. They are not new, but they still are useful as hookups and circuit test boards.

Hunting for parts is time-consuming, if they are located in a full junk box or just lying somewhere around the station. So, first, your junk box system should be improved. Look around for another location for storing electronic parts, so they can be found just like in a small stockroom. One way to do this is to obtain a dresser with five drawers to use for storage. It does not have to be extremely large – say, about 23" x 40" x 13".

Remove the top four drawers. The spaces can be made into shelves by putting plywood boards in on the drawer runners. Glue the runners when you put in the shelves, or drive two small finishing nails horizontally through the cabinet into the shelf edges on each side. Put this "stockroom" in a convenient place near your bench, next to a window, or angled in a corner, for example.

Dump the contents of your junk box on your bench and sort out all the panels, chassis, transformers, sheet metal, wires, and huge bolts. Put those large items back in the junk box.

Obtain fifteen plastic food boxes, a pint or larger, depending on your estimate of the volume of resistors, etc., that you will have. Put the boxes on the cabinet top, and throw the tops into the junk box.

Here is one way to sort the electronic parts and hardware. First, save all those magnets from discarded loudspeakers and TV sets to hold up orbit charts, frequency lists, etc., on a magnetic sheet-metal bulletin board. The radio parts can be rinsed off with warm water to remove dust and then air dried. Pick out all the tuning capacitors and put them in a box for storage elsewhere. Tubes should be in their own cardboard box, in their own location, and a reference on-hand list should be made. Other parts not mentioned are stored the same way.

There should be a plastic box for each of the following: small resistors; large resistors; fixed condensers and trimmers; coupling coils, transistors, and printed circuits; nuts; short machine screws and sheet-metal screws; long wood and sheet-metal screws; large sheet-metal screws; stainless and hardened "coffee pot" machine screws; assorted bolt washers; small star and copper washers; springs; insulated washers, grommets, rings, and grid and plate caps; pilot bulbs, switches, snaps, plugs, and jacks; variable resistors; and knobs. Coin boxes to contain the very fine size hardware, tuner hardware, and slugs are suggested also. The plastic food containers may be covered with a large poster sign card stock to keep the dust out.

Next, the shelf spaces are filled with important items. Shelf number one is for the circuits you want to make, plastic bags and little boxes of unassembled circuits, drill bits, solder, first-aid kit, magnet, register rolls, and instrument batteries, for example.

The second shelf is used for all abrasives, drill arbors, sanding discs, welder's wire brush for cleaning off terminal boards, extra hacksaw blades, and a bar of wax.

The third shelf is used for panel and dial paints, small brushes, contact cement for plastic items, powdered wood glue, rubber cement, plastic rubber (for covering exposed soldered joints, to cement together small objects, and to put neoprene patches on small holes in the generator fuel tank), and glycerine soap with a paint brush for equipment cleaning.

The fourth shelf is for bearings, pulleys, couplings, copper tube cutter, flare tool and spring benders, a box of plastic sheets, etc.

The drawer is used for threaded brass tubes, electrician's bits, and various electrical parts you had made.

The shelf stockroom may be provided with side nails to hold hacksaws, hammer, trisquare for chassis layout, etc.

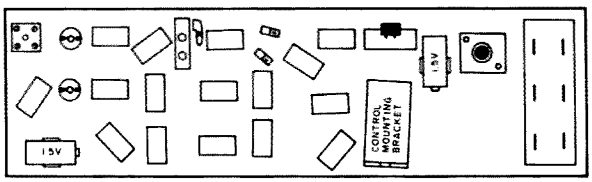

Fig. 1.

A second such storage aid for tubes should have a drawer for them, to avoid roll-out and breakage.

With the convenience of the shelf stockroom, you can now begin to design a circuit assembly board. It may include almost any item for holding the radio parts you want. With care, burnouts probably will be a thing of the past using this board. You will be working over exposed leads, so you must pull the plug when working on the circuits.

This circuit testing board is great because you can construct any circuit on it that is not too extensive. The circuit can be observed first without wiring a potential electrical short in a chassis. You can change any part quickly and conveniently, watch for hot parts, and avoid assembly and disassembly damage.

Select a plank about 24" x 3/4" x 5½", and sand it smooth. Do not paint or oil this board — just keep it dry. Wood is easier to mount items on and less expensive than insulator panels.

The top area of the board consists of the devices which hold wires, such as a terminal strip post board, terminal block, two small ceramic lamp sockets, large brass clips, cheater cord bracket for obtaining 115 V ac, regular ceramic light bulb socket, DPDT knife switch, a bracket with 3/8" diameter hole for carbon control and variable capacitor mounting, and fifteen miniature barrier strips separated by about 3/4" and angled for convenience. Those barrier strips have two terminals and four screws.

One flashlight battery is mounted with soldered leads at each end of the board. Other brackets may be added to hold other parts, such as a bayonet pilot lamp socket. All items are attached to the board with 6/8" pointed sheet-metal screws.

Fig. 1 is the experimental hookup board. It offers convenience when working with low voltages and line voltage circuits and holds parts for higher voltages. A thermal plug fuse should be in the house circuit or on the board in series with the cheater line.

The component leads are attached to the barrier strips. Work with enameled and insulated wires for other connections, and keep each lead clear of touching another. You can see what you want to connect next and demonstrate the circuit any time. Always disconnect input wires before working on your circuits or soldering suggested parts connections. Pull the plug!

Radio and electronic experimenters could find a small part-forming board useful when bending conductors for special switches and slider fingers, for example. See Fig. 2.

The metal-forming and -curving board is made from plywood or subfloor chipboard about 11" x 10". A

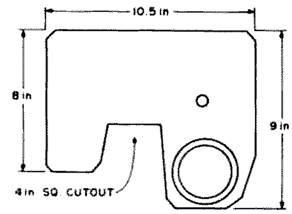

Fig. 2.

test bulb and battery should be near the board's back edge. About 4" from the back edge, a 3/8" diameter metal post is mounted in a partly drilled hole. The post is at least 2" high. It is used to aid in bending strips of metal by pushing the strip down on its top. Next, toward the front on the right, attach a truck door stop bumper. The bumper is a rubber dome mounted on a round aluminum base. Mount it in front on the right side about 1/2" in from the corner. Working clearance is improved by sawing a 4" x 4" piece out on the left side of the bumper. ■

Stirling M. Olberg W1SNN
19 Loretta Road
Waltham MA 02154

A Brass Horn For X-Band

—simple 10.5 GHz antenna

Articles I've written about antennas for an X-band (10.5 GHz) transceiver and the "Smokey Detector"[3] have brought many questions to my desk. One question in particular, asking where the horn used in the tune-up procedure for the Smokey Detector was procured, was the impetus for this construction article. Another question asked about the use of rectangularly-shaped waveguide antennas as signal sources for equipment using circular polarized horns.

When microwave communications in the amateur segment of X band became my prime interest, equipment — mostly waveguide components — was easily found on the surplus market. Signal generators consisting of klystrons and power supplies were readily available after World War II, as were all of the nice goodies like slotted lines, detectors, and precision attenuators. Many gain standard horns found their way to this market but were ignored, and the famous Polaplexor was used instead. That wonderful source of components has dried up, and so we are now forced to borrow from a friendly microwave man or do our own construction.

Horn antennas and all of the other equipment you will need to operate in this exciting band, you can construct yourself. You don't need a machine shop and a lot of cash to buy the parts. Patience and careful use of simple hand tools provided the first experimenters with these items, and so they can provide for you. I made my own pyramidal horn, and here is how you can make a copy of it.

Before I get into the construction details, I will answer the second question mentioned above. Certainly there will be a signal loss over the path between a circular polarized horn and a rectangular or linear transmitter. The Smokey Detector tune-up procedure used these dissimilar polarizations because path loss was not a problem over the short distance used. This practice is not encouraged for regular communication unless you feel that long CQs will afford you the answers from the midnight DX on this band.

A search through well-known references related to microwave antennas revealed that a pyramidal horn would provide a pattern in either plane which is nearly uniform. This is the reason why

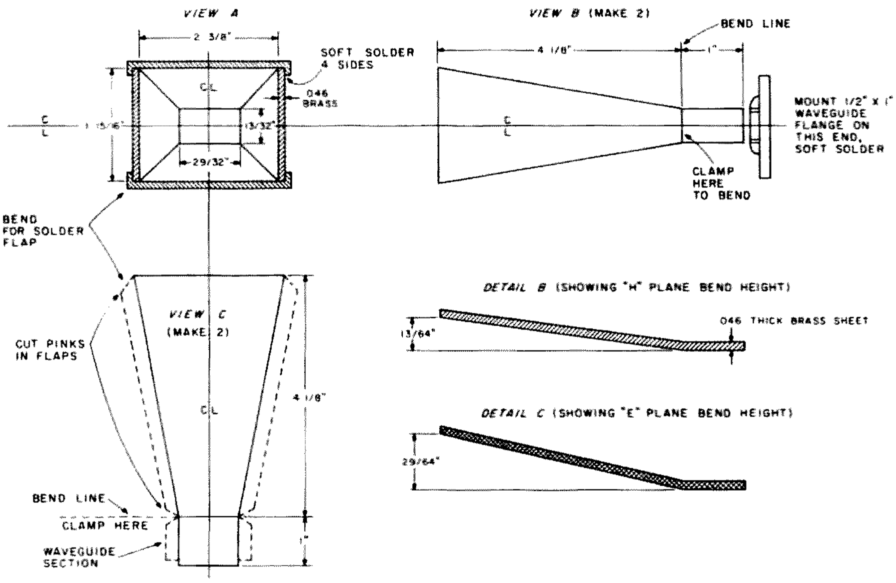

Fig. 1.

it was chosen over the more easily constructed sectoral horn. These references are listed at the conclusion of this article and will also assist you in confirming the pattern measurement.

The construction materials needed are .046"-thick brass sheet, soft solder, and one ½- x 1-inch waveguide flange (UG-135/U). The inside dimensions of the flange are exactly ½ x 1 inch. (A 1.25" departure from the dimensions shown will result in a lot of file waving at the corners of the waveguide end of the horn.) The dimensions of the waveguide end are exactly those of a section of WR-90 small X-band waveguide.

A piece of hardwood two inches long, cut to a rectangular shape which will slide fit into a section of small X-band guide, will be required. This piece will serve as a clamping support when the final assembly and soldering takes place. Be sure that the piece is true over the full length and that the corners are smooth, or it will stick when you try to remove it. Starting dimensions for this jig are those shown at the throat of the horn in View A of Fig. 1.

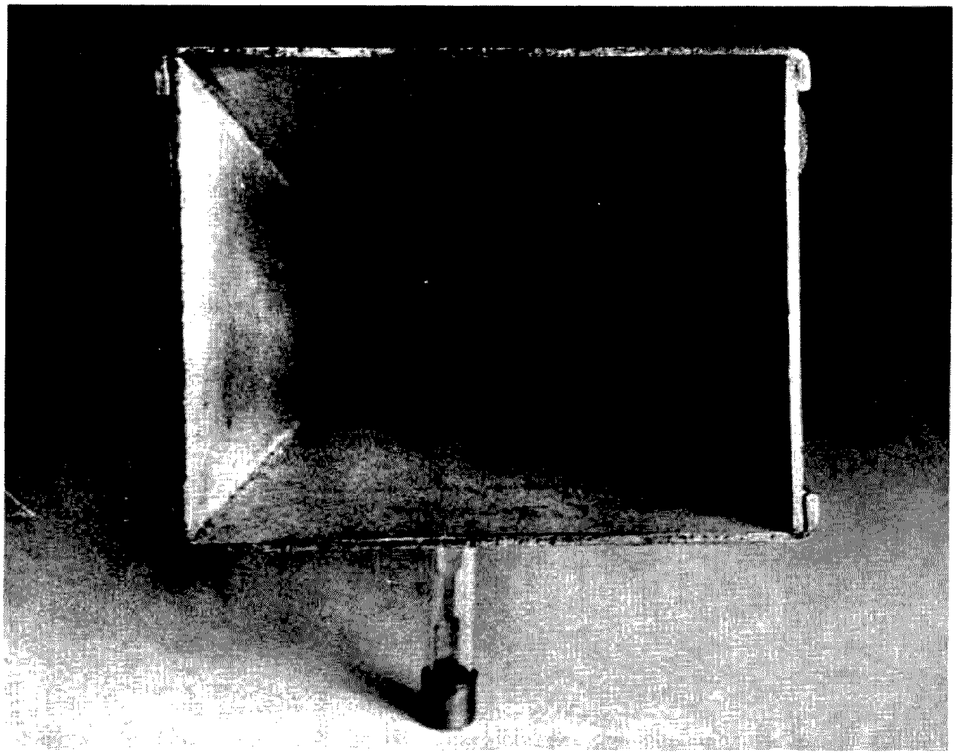

Mouth view of an X-band horn. This shows how the folds are made. Note the smooth inside surface.

The sheet brass for the sidewalls of the horn must be flat. If it is not, you will find that the horn will be very hard to assemble, because all edge surfaces must touch during the final assembly. Be sure that this material is clean and shiny. A small ball of steel wool can be used on the edge surfaces to insure that it is. When you attempt the final assembly, you will appreciate this extra effort.

Lay out the plates for all sides on the clean sheet brass. Scribe the positions of the bend lines clearly. If possible, use DyChem, a blue dye, on the brass so that the lines can be seen easily. Remember to wash off the dye with alcohol before attempting to solder. Allow twice the thickness of the material for each bend point.

The dimensions given in View C (Fig. 1) do not include the material needed for a solder flap, so allow at least 3/8" more material for this purpose. Also, cut 45 degree "pinks" in the flaps at the junction of the horn flare and the beginning of the 1-inch waveguide section.

The use of a sheet metal shear and brake will simplify the next few operations, but, if these tools are not available, two pieces of 1" angle iron and a large vise will serve to do the job. The cutting should be done with a fine-bladed hacksaw. The edges of the cuts can then be smoothed with a file.

Cut two pieces, as shown in View B (Fig. 1), for the H-plane sides of the horn. Place one of these pieces on a flat surface, and clamp it securely to the surface with a C-clamp located at the intersection of the waveguide section and the end of the flare. Place a thick piece of metal under the C-clamp foot on the bending line, as indicated in View B. Now, using another larger piece of metal or a large putty knife, lift up sharply at the mouth end of this section to produce a bend at the clamped end. The height of the bend must be 13/64". The metal is springy and will take some pushing and pulling to achieve the correct height. Care must be exercised during this process so that you don't deform the walls with bends or deep scratches.

Follow the same procedure for the three remaining sections of brass.

When all of the forming bends have been completed, the solder flap bends are next. This job is done in two moves. Place the aforementioned sections of angle iron in the vise jaws. Then station the waveguide end of one E-plane plate between the angle irons so that the bend line of the flap is in position for a bend to 90 degrees.

To make this bend, allowances have been made for the thickness of the material, if you have followed the layout instructions. If not, the width dimension will come out wrong. Check now, and save some grief. When you have determined that the measurements are the proper dimensions, make these bends so that they are square, right-angle bends. If the bend is too shallow, it will make the horn flare wider in one plane, and, of course, if it is too great a bend, the opposite effect will be the result. A 90-degree bend, therefore, is the desired angle.

After completing the waveguide bends just described, complete the horn flare flap bends on the E-plane section. Do both pieces at this time.

Check that the bending you've done has resulted in square and true wall sections, and make sure all the edges are clean and ready for solder. Apply a moderate amount of acid soldering paste to the inside of the flap bends. Now place the previously-prepared wood jig inside of the E-plane waveguide bends of one section. Slip the two H-plane wall sections into place on each side of the jig block. The last piece is the

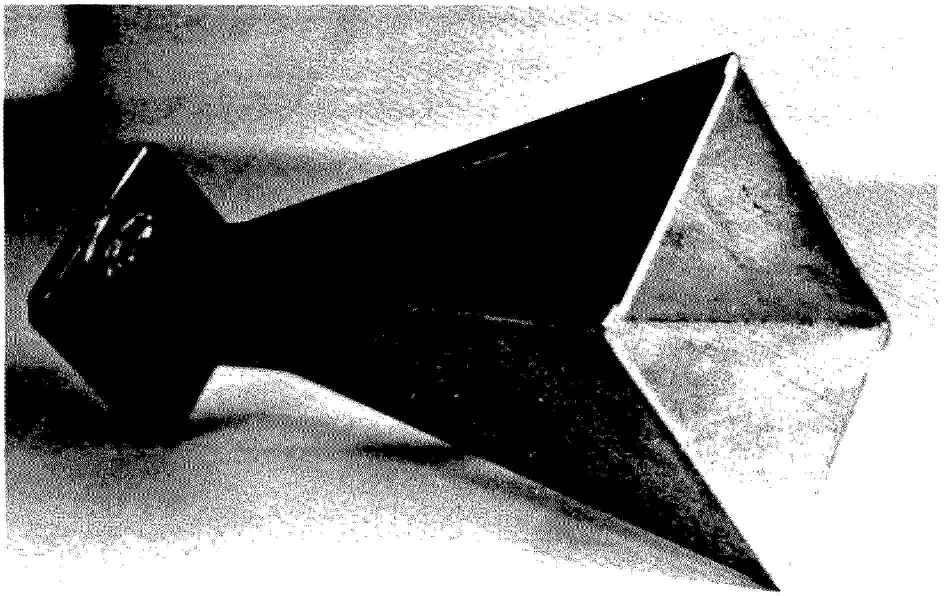

Pyramidal horn. This oblique view of the horn shows the assembly and the addition of a choke flange.

other section of the E-plane wall. Use a C-clamp to hold the whole assembly together by clamping across the E-plane section of the waveguide. Small pieces of thin aluminum sheet can be bent to form cross braces at the inside of the mouth of the horn and will aid in the soldering process. (A piece of wood shaped to fit in position will also do the trick.)

Clamp the outside edges near the end of the flare where the flaps meet the matching side. If you do not provide a firm clamp at these points, when the metal is heated for soldering, it will flex. If you are satisfied that the horn is clamped well enough, you are ready to solder it.

The easiest way to solder the assembled horn is to stand it up on the face of the open-flared end on an electric hot plate. It will take much longer to do the job than with a blowtorch or propane soldering iron, but the heat will be more uniform and the control over the way the solder will flow is better.

When the horn has been heated enough, which will be indicated by the color of the metal where the soldering paste makes contact, place a piece of wire solder on one seam in a stroking action. The solder will run into the seam and down to the open flare. Make sure that just enough solder has filled up each seam to join electrically the seam edges. Use the solder sparingly; too much will cause lumps which will have to be removed. Control the heat by lowering the stove temperature, but keep it just hot enough so that the solder will run.

When this task is complete, turn off the heat and let the whole assembly cool off. Do not lift it off the heater and cool it quickly under water; flexure of the seams can open them.

Remove all jigs and clamps. Carefully inspect the seams to see that there are no gaps in the solder. If there are, the assembly will have to be reheated and the soldering trick repeated. If the soldering procedure has provided a solid connection between all parts of the seams and there are no gaps, fit the flange to the open waveguide end and solder it in place squarely. Be careful not to disturb the previously soldered seams.

The completed horn should be washed in very hot water to remove all traces of the acid solder paste. It then may be painted with Krylon paint to keep the brass from corroding. Do not paint the flange face.

Testing the horn to determine its gain and field pattern requires the use of a signal generator, an attenuator, and two other similar radiating devices.

Connect one of the radiators to the signal source output and the second to the attenuator and a suitable receiving indicator. The separation between the two test setups at this frequency must be 10 feet. The path between them should be free from obstructions and reflections. A pair of ladders six feet high will serve, if two flat surfaces are placed on the top of them. Fasten the radiating horn firmly directed toward the second platform where the second setup must be arranged so that it can be rotated horizontally about the axis of the transmitting horn. A scale laid out on a piece of polar graph paper will assist in locating the half-power points of the horn.

Turn on the equipment. Check that the receiving setup is performing and that sufficient signal is detected when the attenuator is set to 10 dB. Now find the true axis, and make a mark on the plot sheet. Turn the attenuator to the 10 dB position, and note the indicator level. Now rotate the receiving device to approximately 10 degrees off the true axis and note the level. Readjust the attenuator to bring up the level to equal what it was when the device was on the true axis, and note the attenuator difference. You are looking for the level which corresponds to the 3 dB or half-power points. It will probably take several tries using this technique to locate this position. When it is located, move in the opposite direction from the true axis, and locate the opposite half-power point. Mark this on the polar plot sheet.

When the measurements of the two similar radiating devices have been completed, substitute your new horn for the receiving device. Make sure that it is receiving in the correct plane. When it is in place, direct it toward the transmitting radiator centering the true axis through the center of the horn. You will see that the receiving indicator is off scale, or at least reading upscale, showing that the horn has gain. Reduce the indicator reading by adjusting the attenuator so that the indicator reads the same level as the original measurement. Note the attenuator reading, and be sure to note which plane the measurement was taken in. This difference is roughly the gain over the original radiator. If the comparison radiator's gain is known, then you may quote accurately the gain which will be near 13 dB power gain.

Repeat the same procedure in the other plane, al-

ways making sure that the antennas are in the same plane. Cross polarization will be easily detected by the very weak signal received.

This completes the construction of the horn and its measurements. You should have an antenna with a beamwidth of nearly ten degrees to the half-power points in the E-plane and a little wider in the H-plane.

The references which appear at the end of the article are required reading if you are going to attempt this project.

I must sound a note of caution regarding a problem which may be encountered when power exceeds the milliwatt region. It is a well-known fact that radiation from antennas or waveguides which produce an illumination over human tissues in excess of 10 milliwatts per square centimeter can cause serious damage to exposed tissues. Persons who work on military radar can appraise you of this danger and the many lectures they receive about the subject. The most important warning I remember, which I received during my training, was "Don't look into the antenna or into a waveguide." Cataracts on your eyes may be the result. So be careful; don't look into horns or waveguides or, for that matter, any of the UHF antennas you use. Some excellent reading on the subject is listed in the references.

I hope to hear you on 10.445 GHz. I keep a sked with WA1IKR at 0010 UCT on Thursdays to beat the QRM problems. See you there. ■

References

1. Silver, *Radiation Lab Series*, Vol. 12, Sections 15-9.
2. Krauss W8JK, *Antennas*, Chapter 13, Section 13-6.
3. Olberg W1SNN, "Mobile Smokey Detector," *73*, Holiday, 1976.
4. Brodeur, "A Reporter At Large — Microwaves," December 13 and 20, 1976, *New Yorker Magazine*.

Social Events

from page 149

c/o Sue Hagedon WB8GWQ, 1340 Brainard Woods Drive, Dayton OH 45459.

TUCSON AZ
APR 28-30

The Tucson Hamfest will be held on April 28-30, at the Ramada Inn (just off north I-10). It will feature technical sessions with demonstrations, microprocessors, solar poser, QRP, fast/slow scan, RTTY, remote base, etc. There will be prizes, ladies' programs, a banquet, exhibits, and a swap meet. It is sponsored by the Old Pueblo Radio Club. For information, write: OPRC, 1361 E. Edlin, Tucson AZ 85711.

SPOKANE WA
APR 29

SWAP-FEST '78 will be held all day on Saturday, April 29, at the Spokane Interstate Fairgrounds. Flea market, mini-auctions throughout the day, contests, family picnic, major evening auction, some most-unusual radio exhibits, valuable prizes. Sponsored by the Inland Empire area amateur clubs. Talk-in on any area repeater. Write: SWAP-FEST '78, PO Box 3606, Spokane WA 99220.

MEADVILLE PA
MAY 6

The 4th Annual Northwestern Pennsylvania Hamfest will be held on May 6th at the Crawford County Fairgrounds, Meadville PA. Gates open at 8:00. $2 prize ticket required for admission — $1 to display. Children free. Hourly door prizes; refreshments; commercial displays welcome. Indoors if rain. Talk-in on 04/64 and 52. Details: CARS, PO Box 653, Meadville PA 16335.

LAS VEGAS NV
MAY 12-14

The 23rd Annual West Coast VHF Conference will be held at the Stardust Hotel, Las Vegas Strip at Convention Center Drive.

Conference highlights: technical program arranged by the San Bernadino Microwave Society, hospitality room, informal technical and operating sessions, noise figure measurements contest, antenna gain measurements contest, prize drawing, 24-hour adult entertainment! World-famous resort hotel with all facilities. Look for the Stardust sign east of I-15. Take the Sahara Ave. or Dunes-Flamingo exit. Advance registration fee is $4.00 per person ($5.00 at the door). Make checks payable to: West Coast VHF Conference, 510 South Rose St., Las Vegas NV 89106.

DEERFIELD NH
MAY 13

The Hosstraders net will hold its fifth annual tailgate swapfest Saturday, May 13, at the Deerfield, New Hampshire, fairgrounds (covered building in case of rain). Admission is one dollar; no commission or percentage. Commercial dealers are welcome at the same rate. Excess revenues benefit Boston Burns Unit of the Shriners' Hospital for Crippled Children. Last year we donated $430.80. Talk-in on .52, 146.40-147.00, 3940 kHz. If you have questions, send SASE to Joe Demaso K1ROG, Star Rt., Box 56, Bucksport, ME 04416 or Norm Blake WA1IVB, P.O. Box 32, Cornish, ME 04020 or check the Hosstraders net on Sundays at 4 pm on 3940 kHz.

WEST LIBERTY OH
MAY 14

The Champaign Logan Amateur Radio Club, Inc., will hold its annual hamfest on Sunday, May 14, 1978, at the West Liberty Lions Park, West Liberty, Ohio. Free admission; trunk sales; tables are $1.00. Door prizes. Talk-in on 146.52.

WARMINSTER PA
MAY 14

The Warminster Amateur Radio Club's fourth annual "HAMMART," flea market, and auction will be held on Sunday, May 14, from 9 am to 4 pm at William Tennent Senior High School, Street Road (Route 132), 2 miles east of York Road (Route 263), Warminster, Bucks County PA. Registration is $1.00, tailgating $2.00 additional. No indoor selling; bring your own tables. Talk-in on 146.16-76 and 146.52. For further information, write: Horace Carter K3KT, 38 Hickory Lane, Doylestown PA 18901 or call (215)-345-6816.

WABASH IN
MAY 21

The Wabash County Amateur Radio Club's 10th annual hamfest will be held on Sunday, May 21, 1978, rain or shine, at the Wabash County 4-H fairgrounds in Wabash. Large flea market (no table or setup charge), technical forums, bingo, free parking, and lots of good food at reasonable prices. Advance admission is $2.00; $2.50 at the gate. Children under 12 free. Write Dave Nagel WD9BDZ, 555 Valley Brook Lane, Wabash, IN 46992.

COLUMBIA SC
MAY 21-22

The Carolina Repeater Society is sponsoring the Columbia Hamfest on Saturday and Sunday, May 21 and 22, from 9 am to 5 pm at the Jamil Shrine Temple located 1 mile west of I-20 on I-26. Large air-conditioned building with plenty of free on-site parking, a flea market, dealers, and activities. Talk-in on 34/94. Combined admission and drawing tickets are available for $3.00 in advance or $3.50 at the door. Contact Larry Johnson WA4VOJ, 1520 Atlantic Dr., Columbia SC 29210, or phone (803)-772-7984 or (803)-788-1308.

ERLANGER KY
MAY 28

The Kentucky Ham-O-Rama will be held on Sunday, May 28 (Memorial Day weekend), at Erlanger Lions Club Park, Erlanger, Kentucky. It's 7 minutes south of Cincinnati, Ohio, 1 mile off I-75 south, the Donaldson Road exit. Talk-in on 146.19-79 repeater, 52-52 simplex. There will be prizes, exhibits, and a flea market. For information: NKARC, Box 31, Ft. Mitchell KY 41017, or phone (606)-331-4922.

FT TUTHILL AZ
JULY 28-30

The Amateur Radio Council of Arizona will present the annual Ft. Tuthill Hamfest on July 28, 29, and 30th, 1978. Come on out in the cool pine country of Arizona, and join our western barbeque, prize drawings, and tech sessions. For further details or pre-registration forms, contact PO Box 11642, Phoenix AZ 85061.

A Cheapskate's Circuit Board

— for those on unemployment

Gary Sweatt WA1BVD
c/o PO Box 128
Farmington ME 04938

What? Another printed circuit board article? Yup! Only in this one I'll show you a way you can produce good quality photo artwork without spending a lot of bucks on all sorts of fancy stick-'em-ons (which, by the way, are great for those without the time and who have the money).

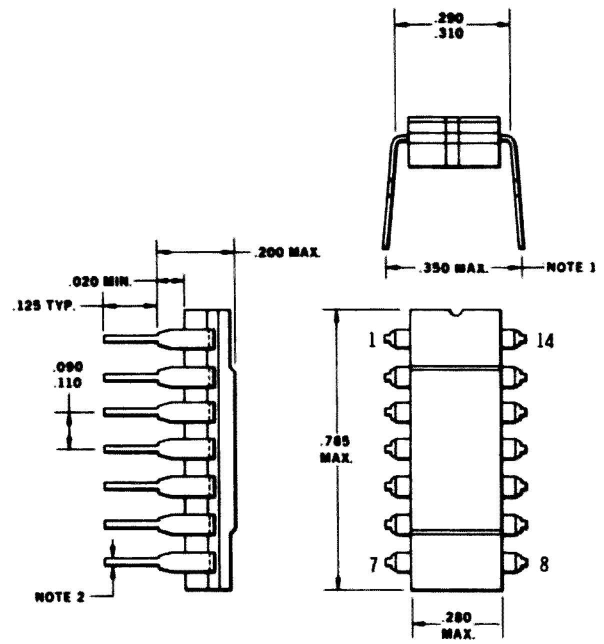

Fig. 1. Dimensional drawing of a typical dual inline package. Notes: 1. Leads are intended for insertion in hole rows on .300" centers. They are purposely shipped with "positive" (.350) misalignment to facilitate insertion. 2. Board drilling dimensions should equal your practice for a conventional .020 inch diameter lead.

The Basic Problems

Since it appears that the accepted way to make quality printed circuits involves the use of photographic techniques, it seems that we must have a piece of artwork to start with. For practical purposes, photo artwork must be:

1. Neat and clean (this part's easy enough, so I won't embarrass anyone by reminding them not to use greasy fingers).
2. Accurate enough so that the parts will fit the finished board (assuming that the negative made from the artwork is produced with good equipment).
3. Cheap.

The Solutions

Neglecting problem 1, if we review the accuracy requirements, we discover that with the exception of dual inline packages (DIPs), relays, trimpots, and a few others, the parts used by digital experimenters have flexible leads which can be bent into the desired positions. This eliminates any stringent accuracy requirements in pad location for these components. For the rest, DIPs, etc., most if not all are available with their pins related to a .100 inch grid (ah ha — the common factor). Two things become apparent to me: First, this grid should be quite accurate as far as the artwork is concerned, and second, it only needs to be this accurate where the parts stick through the circuit board. That is, less accuracy is perfectly acceptable for conductor spacing and so on for most any board of interest to the experimenter. How accurately the centerlines of the grid are located depends upon how much clearance you are willing to accept in the drilled holes plus the dimensional stability of the artwork and negative. Let's examine this more closely, since here is where the crux of the matter lies.

If we consider a typical DIP,[1] then the holes should be .030 diameter more or less. You can see from Fig. 1 that this allows for the ±.005 typical implied lead position tolerance. If we assume that the average package is actually more accurate than this and/or if we accept a little careful lead bending, then we can get good results by splitting this tolerance between the package and the center to center hole spacing on the finished board. This thinking should minimize required lead bending while allowing for some error in pad positioning. By distributing the tolerance, the result is that we can stand an error of about ±.0025 from theoretical centers on the finished artwork. Certainly this is finer work than I would care to lay out by hand at actual or twice size, and it wouldn't

be very much fun maintaining this tolerance at 4 times actual size (.010 = about 2/3 of 1/64 inch). Problem – how do I accurately locate .100 grid component pads without an awful lot of bother (meaning expense and frustration)?

Perhaps now is the time to digress long enough to qualify expense. By reading the Digi-Key catalog of Bishop Graphics' materials, it appears that it would be very easy to spend about $36.00 for a very basic assortment of pads and tapes to use in producing photo artwork (not to mention the cost of a stable base material). I might mention that this assortment doesn't include .600 pin space DIPs (24 and 40 pin) and that it costs just as much every time you run out of one thing or another. Now, since I tend to be somewhat of a Yankee cheapskate, I wanted a system which would cost, say, no more than $20, have a much cheaper than cost replenishment, and would produce usable quality artwork.

After much thought, I wondered if the old unreliable standby, pen and ink, could be whipped into shape – if I discounted time of application (I can be awfully clumsy, so I usually take it real slow and easy with a pen). It appears that the primary shortcomings of this method are maintaining accuracy and repeatability, and hence the absence of popularity for this method. The problem has now reduced itself to the point where obviously an inexpensive guide of some sort would be nice – enter the universal precision DIP printed circuit layout template. For lack of a better idea, this at least was not too unreasonable, so I had my machine shop make one for me to experiment with.

The Template

For ease of handling and ruggedness, I wanted a good thick piece of transparent material and finally decided on 3/16" acrylic sheet as being suitable. I also wanted to be able to locate all common DIP and similar packages. The final version of the template now accommodates DIPs with 40 or fewer pins on a .600 x .100 spacing, 22 or fewer pins with .400 x .100 spacing, and 18 or fewer pins that have .300 x .100 spacing. Also on the template is a square grid of holes (7 x 7) which I use to locate conductor corners and other components on the standard .100 grid. For ease of understanding, I show a complete tracing of this template in Fig. 2.

Other template features include ±.001 center to center and ±.002 center to edge of template tolerances at room temperature. To eliminate some of the inaccuracies which are bound to enter the drawing (Edsel Murphy et al), the template is twice size so that photo reduction to actual size will eliminate 1/2 the error (neglecting camera error). So that the template will work with ink, it is undercut on the bottom side to prevent ink from being drawn under it by capillary action. The edges to the nearest holes are .400 ±.002 inches – handy for aligning a known centerline with the next set of holes.

Finally, the holes in the template are of the proper size so that when the right drafting pen is used (a #3), an open center pad is formed with a center diameter of about .040. This dimension reduces to .020, which forms a reasonable guide of free hand drilling of .030 (more or less) holes.

Other Stuff and Technique

As with any template, it must be held at the correct angle to the work (usually square). I use a drafting table with a machine for this, but a drawing board and T-square should work as well. Other systems which might be used (although I haven't tried them) are a portable drafting machine or the use of ruled (.100 grid) inkable medium where the ruling is done in non-photo blue or similar (the rulings won't photograph but the ink will). With this last system, all one should need would be a straight edge which works with ink (i.e., is undercut) and the template.

For stable base material upon which to draw, I have found experimentally that for small circuits (4 x 6 final size or so), instability from normal temperature and humidity change has been negligible with many "unstable" materials, providing they don't warp or shrink severely during inking. I have had very good results with 3 ply white Bristol board. For larger drawings, it is probably a good idea to obtain a stable material suitable for use with ink. Speaking of which, I have used nothing so much as Higgins black India ink very successfully on my Bristol board drawings, but there are some stable bases that require a different ink for good results (India ink won't stick well to some of these, even if it looks like it is wetting the surface when it is being applied). To apply the ink, I use a K&E "Acetograph" with a number 3 point, but any similar precision drafting pen should work as well.

Where the components go is up to you as determined by preplanning – techniques for this have been covered in many articles.[2,3] Using the template to locate as many holes as possible frequently can result in maximum copper, minimum etch boards (handy if you're not recovering your chemicals). To accurately locate component pads, they should be drawn in one operation for any component – once you start, don't move the template until all pads for that component are located. Also, use good

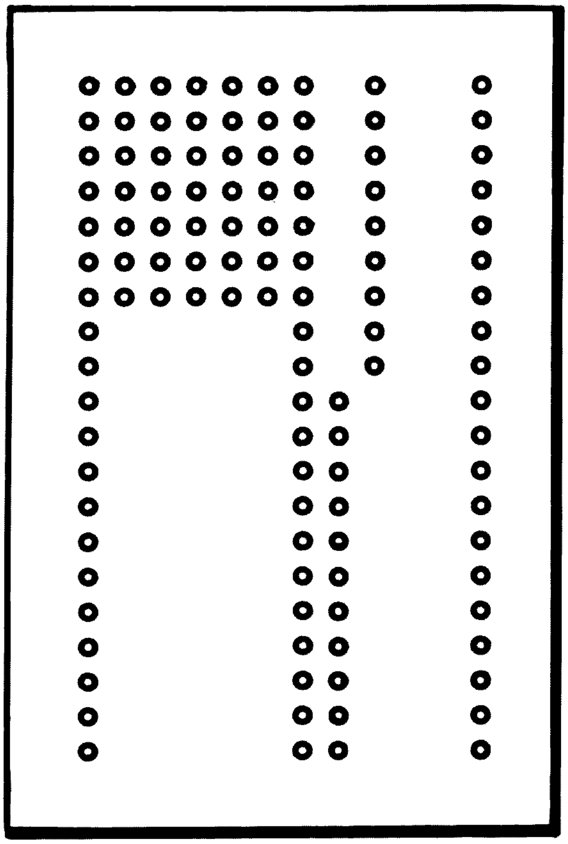

Fig. 2. Actual hole pattern of template; border location shows the approximate edge of the template.

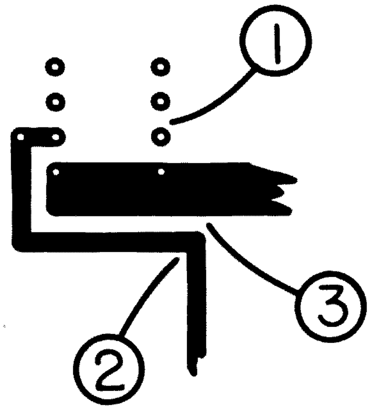

Fig. 3. Partial sample artwork showing (1) 8 pin DIP with conductors the same width as the pads. Also shown are sharp corners (2) and the concept of maximum copper, minimum etch as laid out on the .100 grid (3).

pen technique by holding the pen vertically, and be careful to rest it against the template while marking.

The artwork should be drawn as you look at the foil side of the board (backwards from the component side) unless you are making artwork to use in screen printing. This makes it easy for a photolithographer to make a right reading, emulsion down negative. This type of negative gets the emulsion where you want it, next to the photosensitive circuit board.[3]

And Finally . . .

I have shown you an inexpensive method for producing photo artwork in which the supply replenishment cost is minor and the initial investment for materials can be kept under $20 as follows:

Pen	$8.25	(approximate cost)
Ink	$1.50	(approximate cost of small bottle)
Template	$8.95	
	$18.70	(approximate total)

The system is effective with perhaps two minor drawbacks. First, it is very easy to do complete layouts with the conductors the same width as the pad diameter. This tends to make solder flow along the conductor. Experience shows that for hand-soldered work where there is independent control over the results of each joint, this isn't a real problem. Secondly, by using the grid to lay out corners, it is very easy to get square internal corners somewhat prone to undercutting when etched. Both of these problems are diagramed in Fig. 3. Experience shows that these corners can be carefully filleted by hand or neglected since the material (copper) at the corners (diagonally across them) is thicker than the conductor anyway. These drawbacks are offset by the versatility and low cost of pen and ink. For those who may be interested in using this method, pens, ink, and stable base materials are available at most any drafting supply shop. The precision DIP template is available from Interrotech, PO Box 128, Farmington ME 04938. ■

References

[1] Fairchild – DTL Composite Data Sheet, 1967. (Note that this figure actually represents a JEDEC TO-116 package configuration.)

[2] "Secret PC Layout Method," Silas Smith Jr., *73 Magazine*, Holiday, '76.

[3] "Make Your Own PC Boards," Charles Smith, *73 Magazine*, March, '77.

Jerald R. Malin WB2LEI/WR2ABS
2723 Camelot Road
Endwell NY 13760

Good Grief, Not the 22S Again?

—yes, even more flexibility

Frequency	HEX	Binary			
146.01	6C	01101100	147.00	AE	10101110
04	6E	01101110	03	B0	10110000
07	70	01110000	06	B2	10110010
10	72	01110010	09	B4	10110100
13	74	01110100	12	B6	10110110
16	76	01110110	15	B8	10111000
19	78	01111000	18	BA	10111010
22	7A	01111010	21	BC	10111100
25	7C	01111100	24	BE	10111110
28	7E	01111110	27	C0	11000000
31	80	10000000	30	C2	11000010
34	82	10000010	33	C4	11000100
37	84	10000100	36	C6	11000110
40	86	10000110	39	C8	11001000
43	88	10001000	42	CA	11001010
46	8A	10001010	45	CC	11001100
49	8C	10001100	48	CE	11001110
52	8E	10001110	51	D0	11010000
55	90	10010000	54	D2	11010010
58	92	10010010	57	D4	11010100
61	94	10010100	60	D6	11010110
64	96	10010110	63	D8	11011000
67	98	10011000	66	DA	11011010
70	9A	10011010	69	DC	11011100
73	9C	10011100	72	DE	11011110
76	9E	10011110	75	E0	11100000
79	A0	10100000	78	E2	11100010
82	A2	10100010	81	E4	11100100
85	A4	10100100	84	E6	11100110
88	A6	10100110	87	E8	11101000
91	A8	10101000	90	EA	11101010
94	AA	10101010	93	EC	11101100
97	AC	10101100	96	EE	11101110
			99	F0	11110000

Fig. 1.

One of the most versatile 2 meter transceivers to grace the marketplace is also one of the more popular acquisitions, namely the Icom IC-22S. Freedom from purchasing crystals accounts for most of its popularity, but it also inspires frustration and confusion in new owners. The confusion sets in for those persons who are not familiar with programming a diode matrix, and the frustration occurs when one wishes to program more frequencies than the 23 slots provided. There are invariably just a few more frequencies than room. It sounds like something out of Murphy's law. However, some solutions do exist.

The most obvious choice is to reluctantly remove a few frequencies by exchanging some diodes. This solution is limited in the total number of frequencies, which is the same as what you started with, and, most importantly,

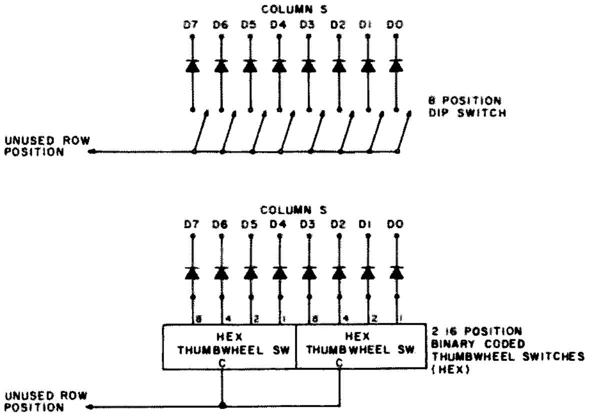

Fig. 2. Diodes are 1N914 or equivalent.

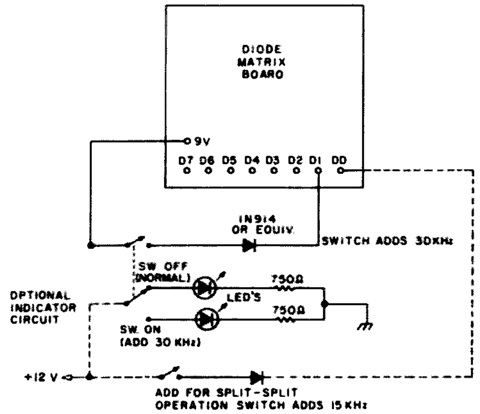

Fig. 3.

it can only be accomplished a couple of times. It seems that after the little solder pads are stroked more than twice by your soldering iron, they promptly jump right off the board, leaving nothing to solder to.

The next solution is a little more lasting. It consists of either an 8-bit mini-DIP switch or a pair of binary coded 16-position thumbwheels wired to a full set of diodes in a specific switch position. The switch can be mounted internally, and thereby accessed only when needed by opening the case. It also could be mounted externally in its own box or as part of your touchtone™ pad box. It is now fully accessible, but you still must remember all of the coding. For the computer buffs, Fig. 1 lists the coding for HEX switches, as well as the binary format.

Mechanical mounting can be customized in any form to suit the user. Fig. 2 shows the necessary electrical connections for hooking up either type of switch. Wiring can be routed through the 9-pin accessory socket or the optional 24-pin accessory socket, as well as through a slot in the case.

Perhaps the above scheme is too complicated or too cumbersome. The next solution is the simplest one. It seems that the right-most column of diode positions on the program board will increment the frequency by 15 kHz. This is the column labeled "D0." The next column to the left, "D1," will increment the frequency by 60 kHz. If you were to program all repeater frequencies that did not use that diode position, you would have every other standard pair and simplex frequency. Now all you need to do is electrically switch in a diode in column D1 in the matrix, and you have the other half of all standard repeater pairs and simplex frequencies. One diode and one SPST switch shouldn't tax even the newest Novice for complexity. Nor will you need to memorize weird combinations to determine what frequency you're on.

Fig. 3 shows schematically how the diode and switch are wired. An optional indicator circuit is shown for night mobile application or just plain idiot lights. Fig. 4 is a suggested list of frequencies to be programmed in the conventional manner. The diode positions are indicated for simplicity. This list will cover all standard band plan frequencies, both repeater pairs, simplex, and optional repeater pairs. For split-split pairs, one more switch and one more diode will give you 44 more frequency combinations. Split-split operation is primarily found in California, New York City, and large urban areas. It is only about 3% of the total repeater population and probably not of interest to the majority of users. I have mentioned it for the sake of completeness. Fig. 5 indicates the additional frequencies available with the additional switch and diode.

There are a number of approaches you may take to implement this scheme. A

Dial position	Switch OFF	position ON		Diode Placement D7	D6	D5	D4	D3	D2	D1	D0
1.	146.01	146.04		o	x	x	o	x	x	o	o
2.	07	10		o	x	x	x	o	o	o	o
3.	13	16		o	x	x	x	o	x	o	o
4.	19	22		o	x	x	x	x	o	o	o
5.	25	28	Standard Low In, High Out	o	x	x	x	x	x	o	o
6.	31	34	Use DUP A	x	o	o	o	o	o	o	o
7.	37	40		x	o	o	o	o	x	o	o
8.	43	46		x	o	o	o	x	o	o	o
9.	49	52		x	o	o	o	x	x	o	o
10.	55	58	Standard Simplex Frequencies	x	o	o	x	o	o	o	o
11.	91	94		x	o	x	o	x	o	o	o
12.	97	147.00		x	o	x	o	x	x	o	o
13.	147.03	06		x	o	x	x	o	o	o	o
14.	09	12		x	o	x	x	o	x	o	o
15.	15	18		x	o	x	x	x	o	o	o
16.	21	24	Standard High In, Low Out	x	o	x	x	x	x	o	o
17.	27	30	Use DUP B	x	x	o	o	o	o	o	o
18.	33	36		x	x	o	o	o	x	o	o
19.	39	42		x	x	o	o	x	o	o	o
20.	45	48	Simplex	x	x	o	o	x	x	o	o
21.	51	54		x	x	o	x	o	o	o	o
22.	57	60		x	x	o	x	o	x	o	o

Fig. 4. Suggested frequency list. x = diode; o = space.

Dial Position	Off	On
1.	146.025	146.055
2.	085	115
3.	145	175
4.	205	235
5.	265	295
6.	325	355
7.	385	415
8.	445	475
9.	505	535
10.	565	595
11.	925	955
12.	985	147.015
13.	147.045	075
14.	105	135
15.	165	195
16.	225	255
17.	285	315
18.	345	375
19.	405	435
20.	465	495
21.	525	555
22.	585	615

Fig. 5. Split-split frequencies with second switch. (Second switch ON.)

few will be described below, but they do not approach all of the possibilities that each user can invent to suit his own personal taste and habits.

The conservative approach: This scheme is for those persons who wish to preserve the "unmodified look" on their equipment. The two conductors for the switch leads can be connected through the empty pins in the accessory socket. The switch can be mounted anywhere that's convenient, such as in the touchtone box or taped to the top of the rig. Use your imagination.

The daring approach: Above the channel selector switch at the top of the plastic front bezel, there is just enough room to mount a subminiature toggle or slide switch right where it would be most convenient to use. It is a little tricky and definitely not recommended for the fat-finger set. If you have real dexterity, you can mount a DPDT switch and a couple of LEDs to indicate which way the switch is thrown. Again, your imagination is the limit.

The subtle approach: For those who like to customize their rigs without being obvious, replace the squelch or volume control with one having a push-pull switch built in. No holes are drilled, the switch position is obvious, and the rig is not defaced in any way. Both switches can be changed for those wanting 15 kHz splits.

Since each user must decide what is best for him, and since an infinite number of schemes exist, the above ideas should provide enough mental stimulation without belaboring the point.

1. 01
3. 13
5. 25
7. 37
9. 49
11. 91
13. 03
15. 15
19. 39
21. 51

Fig. 6. Using the frequency selection chart of Fig. 4, a nice phenomenon occurs. The last digit of the dial selector corresponds with the last digit of the frequency for each odd position of the switch. This should ease the task of memorizing what frequency is where.

The schemes described above were compiled through discussions with many IC-22S owners and users. I specifically want to thank WA2KTJ, WB2HQE, and WB2HQC, who contributed and modeled most of these ideas on their rigs. ■

Evert Fruitman W7RXV
2808 West Rancho Drive
Phoenix AZ 85017

Avoid An Overvoltage Catastrophe

—protective circuit

When the spare car battery under the table began giving way to regulated power supplies to run the mobile rig in the house, the specter of creamed, frapped, and fried rigs started to rear its ugly head. This was brought about by the possibility of power supply component failure. With this in mind (not to mention the smell of the smoke), I worked out and tested several methods of protecting the delicate equipment. They are presented here. Fig. 1 shows a typical series-regulated power supply suitable for use with 12- to 14-volt equipment drawing up to 4 Amps. Although state-of-the-art systems would use at least one or more ICs, most of the parts for this supply might be found in the junk box.

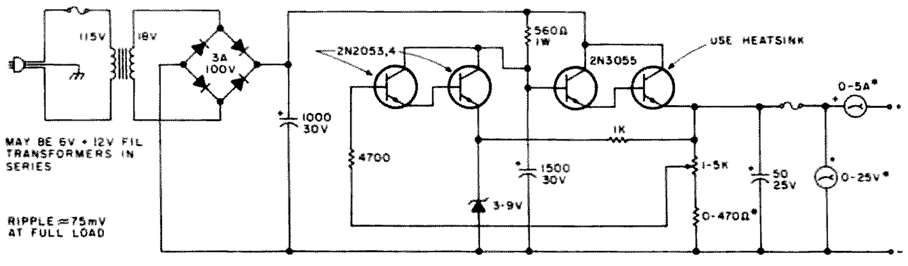

*Fig. 1. Typical regulated power supply. This may be built for $20 to $30 with some surplus parts. *Typical values.*

In order to obtain 13 volts out of the supply, about 18 volts must go into the bridge. The voltage out of the first filter may exceed 25 volts. A component failure in the control circuit could place excessive voltage on your unsuspecting rig. That could unduly stress some of the semiconductors and cause them to fall by the wayside. Fuses and other protection circuits could operate, but they would probably be too slow. Those protection circuits that are internally connected to keep the series-pass transistor from passing more than a predetermined amount of current or voltage depend upon said transistor remaining in good health under all conditions. That isn't a safe assumption!

Fig. 2 shows one of the simplest protection systems of all. When the voltage reaches the breakdown or zener voltage of VR, the diode goes into conduction. There is no current limit other than the fuse, which blows. VR is picked to have a value just above the normal operating voltage of the home supply, but well below the upper limit of the rig. (Mobile equipment has be rated to withstand upwards of 16 volts.)

The good news about this system is that it is simple; the bad news is that, unless a very heavy-duty zener is used, every time it operates, the fuse and the diode must be replaced. When the diode goes into heavy conduction due to an overvoltage condition, it shorts out and thereby blows the fuse. This system is as effective as it is simple and may be found in commercially-manufactured equipment.

One alternative is a string of low-voltage high-current zeners in series. They would be able to carry enough current to blow the fuse without shorting out. This method is fairly economical and still re-

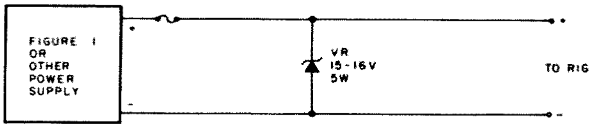

Fig. 2. Simplest overvoltage protection. (Use should be restricted to low current supplies.)

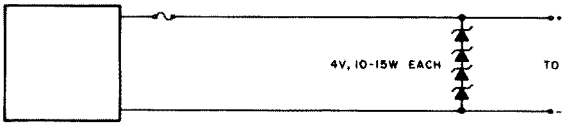

Fig. 3. Heavier-duty protection system.

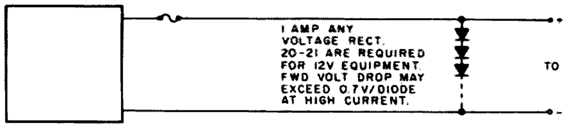

Fig. 4. Heavy-duty protection system (similar to Fig. 3). Some 73 advertisers have been selling 1N4001s for 15/$1. 3- to 5-Amp diodes would be better, but they would raise the cost.

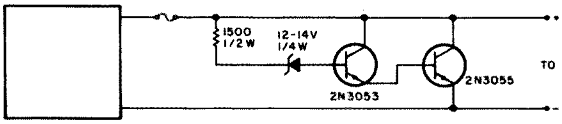

Fig. 5. Improved heavy-duty protection system.

tains a high degree of simplicity. Remember, in case of a malfunction, only the fuse should have to be changed, not the zeners. See Fig. 3.

Going one step up the complexity ladder, the next method amounts to a diode amplifier. A low-current zener is used to tell a heavy-duty transistor when to turn on and blow the fuse. This is a nondestructive system and still clamps the output voltage to a safe level. Only the fuse need be replaced after the system operates. It still does not have a really sharp turn-on characteristic, though. It is probable that it will bleed some current all of the time if it is operated near the zener's voltage rating. It leaves something to be desired, but it certainly would provide protection. It is shown in Fig. 5.

Another approach is shown in Fig. 6. A pot is adjusted to fire an SCR when the voltage reaches a predetermined point. The SCR system needs a suitable RC network to prevent accidental triggering by transients or glitches. (Go ahead, ask me how I know!) This one seems to have been dropped from general use.

Fig. 7 shows a very effective overvoltage system. With the values shown, it may be adjusted to dump anywhere from 7 to 30 volts, and it may be set to within ½ volt of the desired trip point. It may be used on power supplies delivering upwards of 30 Amps. There is no "bleed" current through the power transistors and only about 20 mA in the control circuit.

VR1 and the 4700-Ohm resistor provide a stable reference voltage for the base of Q1, which is one-half of a differential amplifier. The 1k resistor and 10k pot sense the voltage level and feed a portion of it to the base of Q2, where it is compared to the reference voltage.

Q2's collector voltage shifts from 5 to 9 volts, depending upon the setting of the pot. This 4-volt change is coupled to the base of Q3 via the 5600-Ohm current-limiting resistor and the second zener, which is used to get rid of the 5-volt offset coming in from Q2's collector. With this arrangement, Q3's collector will go suddenly from 0 to 13 volts, until it is tied to the base of Q4.

With Q3's collector low, Q4 and Q5 are just quietly sitting there waiting for some forward bias. When Q3's collector swings high, Q4 and Q5 (a Darlington pair) are driven into "hard" conduction. Since Q5 is connected across the power supply, the fuse blows. Until it opens up, the voltage is clamped very close to the value determined by the setting of the pot.

Additional 2N3055s should be paralleled with Q5 for each additional 10 Amps of fuse rating. Since Q5 is turned on only long enough to blow the fuse, there is no need to put it on a heat sink.

The layout is not critical and neither are most of the parts values, but try to stay within 20% of the listed values if you want it to work as well as possible.

Initial setup is fairly simple. Connect a voltmeter across the power supply. Replace the fuse with a 12-volt 150-mA (or higher current) lamp. If the power supply is adjustable, set it for about 14½ to 15½ volts. Adjust the 10k pot until the light snaps on. Double-check that adjustment. Slowly back down the power supply voltage and note the point at which the lamp goes off. This should be within ½ volt, and typically within ¼ volt, of the desired trip point. (That's why you should stay within 20% of the values given in the parts list.) If the power supply is not adjustable, then place one or two flashlight batteries in series with it for initial setup.

If all of the parts are purchased new from some of the surplus dealers found in the back of this magazine, the whole thing shouldn't cost $5.00. Of course, that price could be trimmed with a little help from the junk box.

One more thing: This unit could be built into a small box and added to the mobile rig in the car to protect it from possible automotive voltage regulator malfunctions. ■

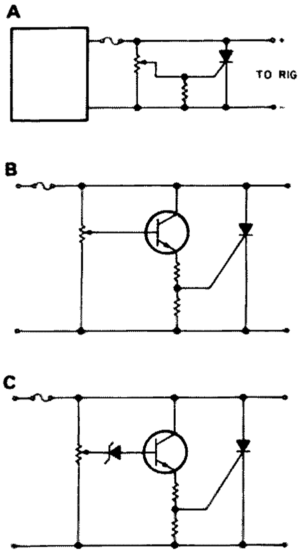

Fig. 6. Overvoltage protection with SCRs.

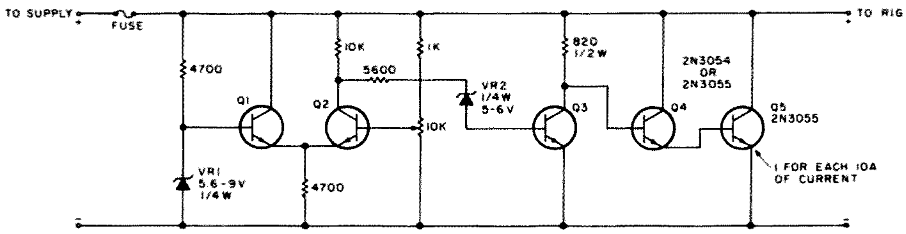

Fig. 7. Sensitive, adjustable overvoltage protection system. Q1, Q2, and Q3 are 2N2926, 2N3414, etc.

The Amazing Zener Sweeper

—big deal gadget tests zener diodes

Richard Need WB4YOD/PY8ZAF
Summer Institute of Linguistics
Caixa Postal 129
78.900 Porto Velho, Rondonia
Brazil

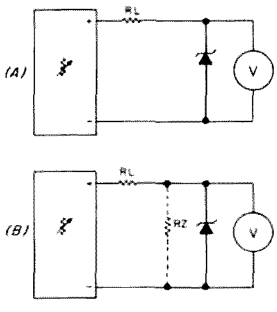

Fig. 1.

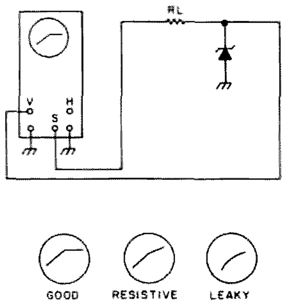

Fig. 2.

Have you ever acquired a packet of unmarked, untested zener diodes from one of the surplus dealers who advertise in *73 Magazine*? (Of course, you wouldn't buy from one who doesn't advertise in *73*!) Perhaps you have discovered that sorting and testing 100 such zener diodes is a rather formidable task.

The common method of testing a zener diode is by connecting the zener in series with a limiting resistor across a variable voltage source and metering the zener voltage. See Fig. 1(a). As the supply voltage is increased, the voltage across the zener diode will be equal to the supply voltage until the zener point is reached. At that point, the voltage across the zener will cease to rise with further increase in the supply voltage, and the meter will indicate the zener voltage. This test, however, does not make it readily apparent whether or not the zener under test is leaky. In Fig. 1(b), this zener diode leakage is represented by RZ in parallel with the diode. The applied voltage will divide across RL and RZ until the zener point is reached, at which time it will stabilize. In this case, the voltage across the zener diode increased with increasing supply voltage, as it should, but it was less than the supply voltage. A careful observer may notice this, but I have been known to miss it.

The shortcomings of this method can be overcome by using a sawtooth test voltage and monitoring the zener voltage with an oscilloscope whose horizontal sweep is driven by that sawtooth. This is possible with an oscilloscope that provides front-panel access to its internally-generated sweep voltage, as shown in Fig. 2. The displayed ramp will rise to the zener point, beyond which it will be a horizontal line. If the zener passes current before the zener point is reached (is leaky), the ramp will be curved. If the zener does not go into complete conduction at its zener point (is resistive), the horizontal trace will continue to rise. This would seem the ideal method, but it does have several disadvantages:

1. Not all oscilloscopes pro-

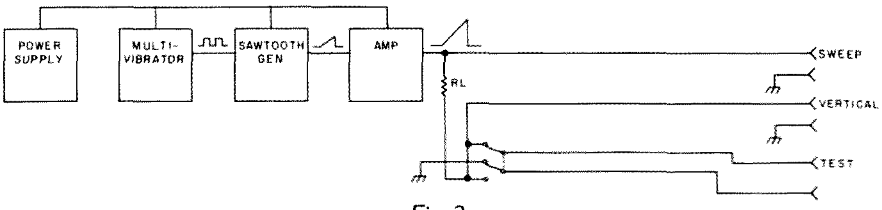

Fig. 3.

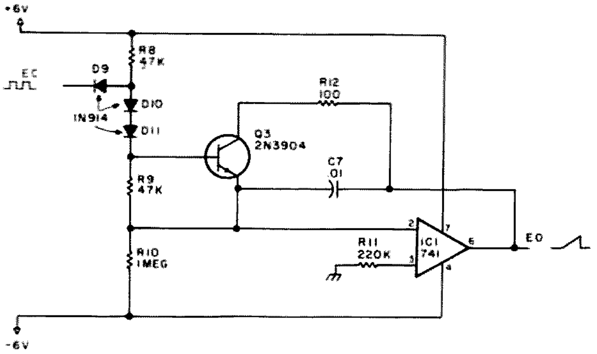

Fig. 4.

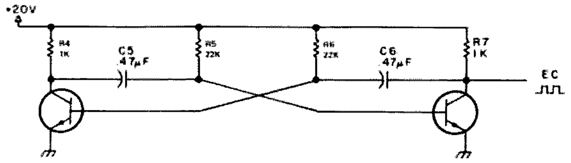

Fig. 5.

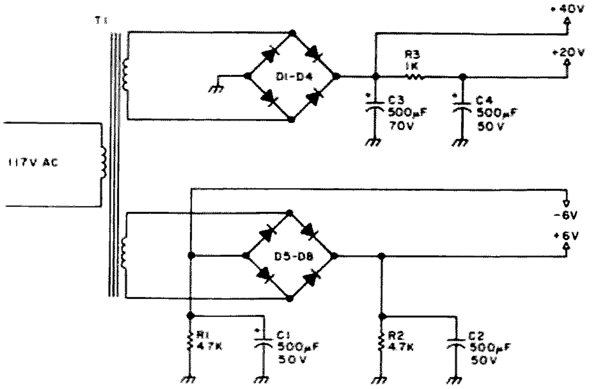

Fig. 7.

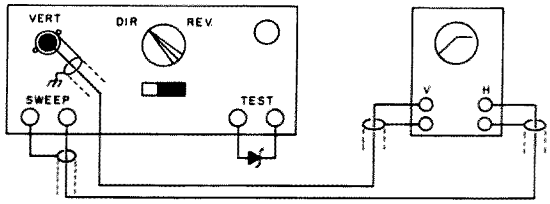

Fig. 8.

Fig. 9.

vide front-panel access to the sweep voltage.

2. The trace on the screen often begins after the voltage on the sweep output terminals has risen to some value, making it impossible to test zeners of voltages lower than that value.

3. It is somewhat time-consuming for use in testing any great number of devices. (Remember that packet of 100 unmarked, untested zeners?)

Perhaps you have anticipated the next step. A sawtooth generator whose output has a zero baseline and sufficient amplitude to exceed the voltage of the zeners to be tested will do nicely. Described hereafter is a tester that provides these features. The circuits, far from original, have been borrowed from various sources and modified as necessary to utilize the contents of my particular junk box.

Fig. 3 is a block diagram of the tester. A sawtooth, controlled by a multivibrator, is amplified and applied to the test circuit. Jacks are provided for connections to the oscilloscope inputs and for leads to connect to the zener under test.

The heart of the tester is an integrator with a clamping transistor to reset the timing capacitor at the end of its timing cycle, which produces a sawtooth (Fig. 4). The required control voltage, EC, is obtained from an astable multivibrator. When EC is high, D9 is reverse biased, and the positive voltage, applied through R8, holds Q3 in saturation. R12 is thus in parallel with C7, the timing capacitor. EO is then essentially zero. When EC goes low, D9 conducts, and D10 and D11 are reverse biased. Q3 turns off, and the circuit begins to integrate at the rate of I_{R10} x C7 volts per second. This rise continues until the control voltage again goes high, driving Q3 to saturation and discharging C7. With the components

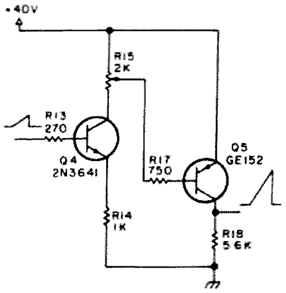

Fig. 6.

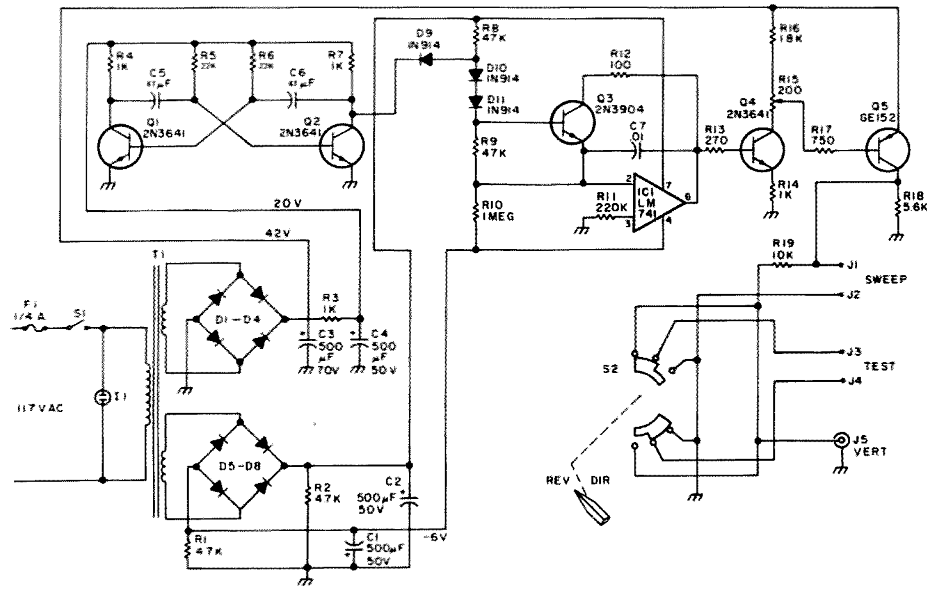

Fig. 10. Zener diode tester.

shown, the rise is approximately 560 volts per second. The amplitude of the ramp produced is dependent on the timing rate, limited by the voltage applied to the integrated circuit.

Fig. 5 shows the astable multivibrator that produces the control voltage. The timing components are C5, R5 and C6, R6. The time interval of conduction of the transistors is given by: T = 0.692 x C x R.

With the components shown, pulses of approximately 7 milliseconds duration are obtained with an amplitude of 18 volts. This is quite adequate to control the sawtooth generator.

The sawtooth from IC1, approximately 4 volts in amplitude and of 7 milliseconds duration, is applied to a two-stage direct-coupled amplifier (Fig. 6). Output from the amplifier section is a 40-volt sawtooth whose duration is somewhat less than 7 milliseconds, having lost a bit due to the bias on transistors Q4 and Q5. Q5, a GE152, is the only critical component in the tester. It must have good linearity, low leakage, and an adequate voltage rating.

The power supply, Fig. 7, is designed to provide both positive and negative 6 volts from a single low-voltage secondary. A bridge rectifier is connected with equal loads on its positive and negative outputs. Equal current flows in both loads; hence, equal voltages of opposite polarity are developed. These power the LM741. The high-voltage secondary provides +40 volts for the output amplifier, which ensures that the test sawtooth will be of sufficient amplitude for the range of zener diodes normally encountered in the shop where this tester is in use. R3 is used to drop the +40 volts to +20 volts to power the multivibrator.

The zener diode tester is quite simple to use. Connections are made from the tester to the vertical and horizontal inputs of an oscilloscope whose vertical amplifier is set for "dc" and whose horizontal amplifier is set for "external." The zener diode is connected to the test terminals and a graphic representation of the zener characteristics is displayed on the oscilloscope screen. The zener voltage may be read on the screen if the oscilloscope is calibrated. A polarity-reversing switch is provided for convenience in switching the polarities of the test terminals. A normal zener will produce a distinctive trace, while a defective device will be readily apparent (Fig. 9), thus facilitating rapid testing.

Figs. 11 and 12 show the layout used in the prototype of this tester. Nothing in the layout is critical, which means a great deal of variation is possible, so you can make use of any available parts.

Though constructed only recently, this tester already has proven of tremendous value. Several previously inexplicable power supply problems have been resolved by demonstrating that a zener knee was not sharp. Additionally, more than 100 unmarked, untested zener diodes, purchased from one of the surplus dealers who advertise in *73 Magazine*, have been tested and sorted. I have found it well worth my time. ■

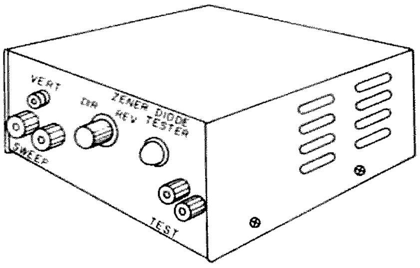

Fig. 11. Panel layout.

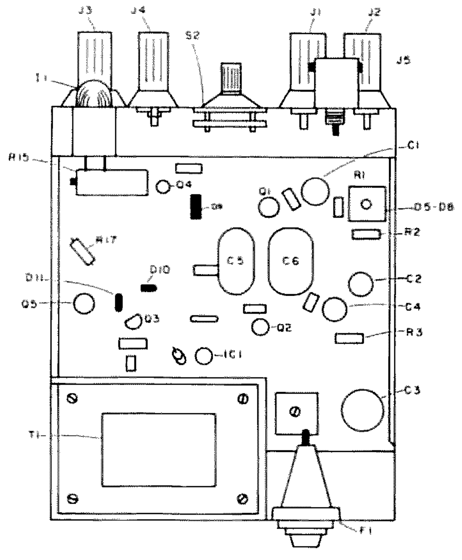

Fig. 12. Component location.

References

IC Op Amp Cookbook**,** Walter G. Jung, Sams, p. 388, "Low Frequency Sweep Generator."

Electronic Circuit Design Handbook**,** Tab, p. 141, "Power-Less Pulse Amplifier."

Handbook of Semiconductor Circuits**,** Tab, p. 243, "Basic Saturated Astable Multivibrator."

How To Use a Varactor —And Why

—semi-exhaustive article

Jim Barnett W6JB
1163 Calle Las Trancas
Thousand Oaks CA 91360

This article is written to acquaint anyone who has not used voltage-variable capacitors (varactors) with their most important characteristics. Varactor diodes are about the same size as the popular 1N914 diode. They can be used to replace larger and slower-reacting mechanically-variable capacitors and are easily remotely controlled.

For example, a circuit to be tuned using a mechanically-variable capacitor has to be carefully located in a place where the shaft is accessible to, for example, a front panel. The varactor and the circuit it tunes, on the other hand, can be located anywhere, with no regard for the front panel. A potentiometer to derive the control voltage for the varactor can be mounted anywhere on the front panel, and the dc control wire can be routed at a great distance from the varactor and tuned circuit.

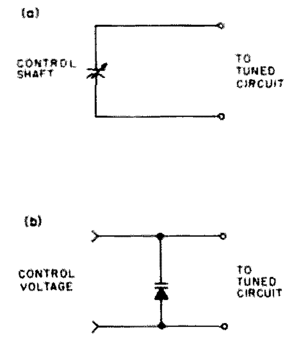

Fig. 1. (a) A mechanically-variable capacitor. (b) A voltage-variable capacitor (varactor).

Varactors can be ohmmeter tested for forward and reverse resistance to determine if they are good. However, the varactor diode does not operate as a zener diode or as a rectifier diode. It is biased in the reverse direction, as is a zener diode, but does not go into avalanche breakdown. It is, in fact, operating in a cutoff condition. As the reverse voltage (bias) is varied, the junction capacitance varies, providing a voltage-variable capacitor. Fig. 1(a) shows a mechanically-variable capacitor, and Fig. 1(b) shows a varactor (voltage-variable capacitor). It is notable that any diode can be used as a varactor, although capacity range, unloaded Q, and nominal capacitance values may fall short of some amateur project requirements.

Applications

Varactors can be used in small signal-tuned circuit applications where space, layout restrictions, speed of tuning, and reliability are important. Some typical applications are FM generation, remote vfos, remotely-tuned filters, and remotely-tuned amplifiers. The varactor shows true superiority over mechanically-variable capacitors in situations demanding rapidly changing capacitance values; two examples are electronic scanners and FM demodulators using phase locked loop techniques.

Control Voltage (Bias) Requirements

There are two ways to provide the control voltage to varactors used in tuning applications. One way, as in Fig. 2(a), is to use a radio frequency choke. The other way, as in Fig. 2(b), is to use a carbon resistor. The rf choke is frequency sensitive and can load the circuit to be tuned with undesired reactances. The carbon resistor is a better choice, because it is frequency insensitive, and almost no control voltage is dropped across a 100k resistor. 100k of resistance will not load tuned circuits using varactors, and it is the varactor's own Q_u that will normally determine the overall circuit loaded Q. Q_u is the unloaded varactor Q and is mathematically approximated by dividing its capacitive reactive value by its series resistive losses.

Typical Control Voltages

Varactors typically are controlled by voltages in the 2- to 30-volt range and are rated for their nominal capacitance value at 4 volts. See Fig. 3(a). Fig. 3(b) shows how Q_u degrades for low voltages and illustrates why most varactors seldom are controlled by less than 2 volts. At less than 2 volts, the varactor Q_u becomes so poor that the selectivity of the tuned circuits is quickly degraded. In the circuit shown in Fig. 3(d), the circuit loaded Q is controlled by the inductor's relatively low Q of 100. Fig. 3(c) shows how only a small change in control voltage at the 3-volt level has

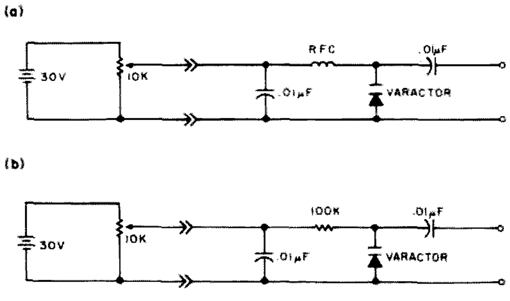

Fig. 2. (a) The rfc isolates the rf-tuned circuits from the low-impedance control voltage circuitry. The .01 uF capacitors provide bypassing and dc blocking. (b) The 100k resistor works better than the rfc for isolation.

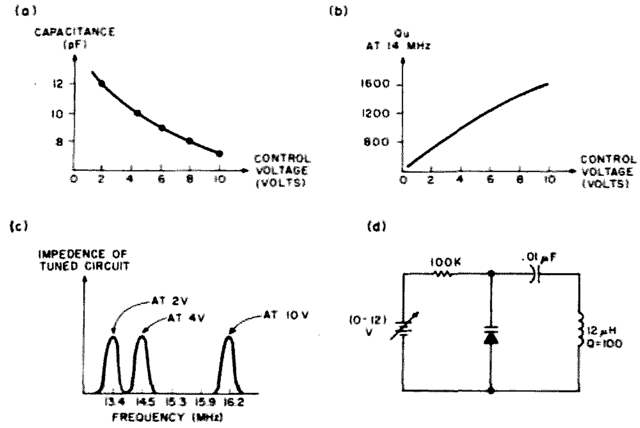

Fig. 3. Hypothetical varactor curves and circuit.

a greater effect on moving the tuned circuit's center frequency than the same small change would have at the 9-volt level.

Hyperabrupt and Abrupt Junction Varactors

Hyperabrupt junction varactors typically have nominal capacitance (at 2 volts) around 200 pF to 500 pF. They have 10-to-one capacity change ability but have poor Q_u values at frequencies above 1 MHz. They do find use in broadcast AM receiver circuits where the 500 kHz to 1500 kHz frequency band must be tuned. It is seen from:

$$f_{1500} = \frac{1}{2\pi\sqrt{L\times C}} \text{ that}$$

$$f_{500} = \frac{f_{1500}}{3} = \frac{1}{2\pi\sqrt{L\times 9\times C}} \text{ and}$$

that a 10-to-one capacity change will more than tune the entire broadcast AM band.

Abrupt junction varactors typically have nominal capacitance (at 4 volts) around 1 pF to 50 pF. They have 2- or 3-to-one capacity change ability and have good Q_u values usable up to the VHF bands. The amateur ham bands are so narrow that the 2- or 3-to-one capacity change ability is more than adequate to tune any of them.

Tracking

Varactors can be used in gang-tuned circuits or in isolated circuitry tuned to the same frequency (Fig. 4), but now attention to the details such as stray capacitances and electrical sameness of all varactors used must be considered. The inductors are identical, and so must the values of varactor capacities be identical for any control voltage to get good tracking. Incorrect tracking would cause the input-tuned circuit to tune at, for example, 14 MHz, while the output circuit might tune at 14.5 MHz. This would be an example of poor tracking or misalignment. Careful curve matching, as in Fig. 3(a), to insure that one varactor has the same capacity as its matching varactor at the same control voltages will, along with matching stray capacitances, provide good tracking.

Temperature Stability

The varactor barrier potential will change with temperature at about -2 mV/°C. This could be significant at low control voltages and can be compensated for as shown in Fig. 6. The extra diode should have an alloy structure similar to the varicap junction. For most amateur applications, one can ignore temperature stability problems.

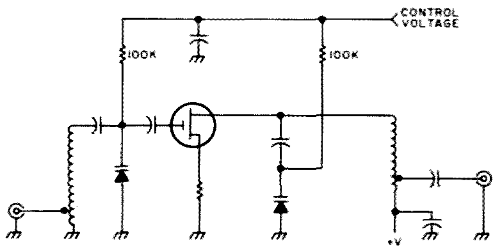

Fig. 4. A hypothetical radio frequency amplifier with two identical tuned circuits.

Nonlinearity Precautions

Cross modulation in a receiver front end using varactors could be a problem if care is not taken. A strong signal being amplitude modulated a few kHz away from the varactor-tuned circuit's center frequency could alter the control voltage on the varactor. The rapidly changing control voltage could cause amplitude variation of a desired signal at the strong signal's modulation rate.

Intermodulation distortion products could occur when two strong signals are added to the varactor control voltage. Two circuits used to combat these effects are shown in Fig. 6. It is seen that large alternating control voltage variations cause one varactor to increase in capacity and the other varactor to decrease in capacity, in effect canceling the total network capacity change.

Summary

The basic properties of voltage-variable capacitors (varactors) and some circuitry used with varactors has been presented. The varactor is a rugged, reliable, small, remotely tunable, fast, and easy-to-use device for tuned-circuit applications. For beginning amateur projects using varactors, no special attention to details is required. For advanced amateur projects, some areas of special care have been identified and some solutions offered. I hope that your interest has been sufficiently stimulated so you will try varactors in amateur projects of your own.

These devices are available at most large electronic distributors and are not too expensive. It has been pointed out that any diode can be used as a varactor. It was noted that Q_u, nominal capacity, and capacity tuning range of the ordinary diode isn't as good as specially-manufactured varactors, but it could be fun to start pulling diodes out of your junk box, isolate them with a 100k resistor, provide dc blocking and bypassing with .01 uF capacitors, and, say, build your own RIT (receiver incremental tuner). ■

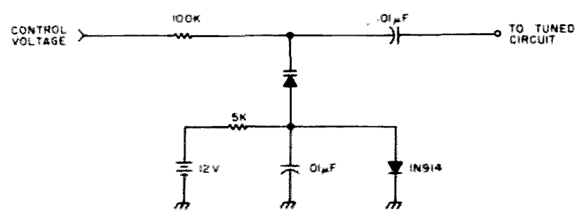

Fig. 5. Temperature-compensated varactor circuit.

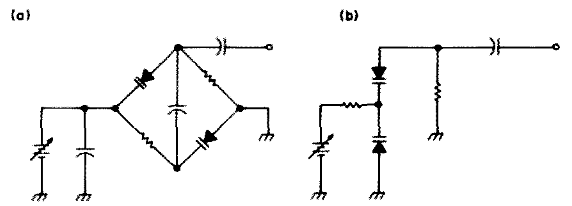

Fig. 6. (a) This is the parallel arrangement. (b) This is the series arrangement. All resistors are 100k, and all fixed capacitors are .01 uF. These circuits compensate for strong signal effects on varactors biased at low voltages.

Can A Diode Replace A Relay?

—antenna switching with a diode!

73 Magazine *Staff*

Solid state antenna transmit/receive switching is not a new idea and is employed in many low-power 2 meter transceivers. At low power levels, garden-variety diodes can be employed, so such a method of transmit/receive switching becomes economical as well as efficient.

It would be desirable to employ diode-type antenna switching at higher power levels also. Such switching is essentially instantaneous and avoids the mechanical and electrical problems associated with relays. Relays are certainly reliable devices, but, in mobile and outdoor installations, they can develop problems over a period of time. Diode switching is especially advantageous in any outdoor antenna switching scheme, since problems associated with weatherproofing disappear.

This article describes a new transmit/receive diode, developed by Microwave Associates, which is in the same price class as a relay. It will handle 50 Watts of CW/FM output or about twice that much for SSB. Unfortunately for the HF CW gang, it is only usable over the 20 to 450 MHz range. Otherwise, they would have found the perfect antenna switching device for break-in CW on the low frequency bands.

The electrical diagram of the device is shown in Fig. 1. Operation is simple in that it operates as the diode equivalent of a single-pole double-throw switch. When a positive voltage is applied to the "+ receive" terminal, the top diode is forward biased, via

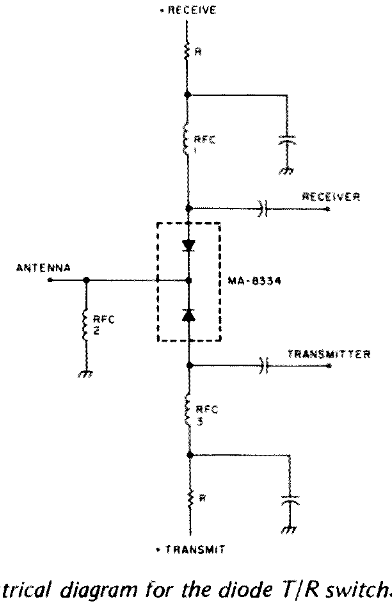

Fig. 1. Electrical diagram for the diode T/R switch. The values for the rf chokes and capacitors must be those applicable for the frequency band being used from 20 to 420 MHz. Note that the circuit places a small dc voltage on the antenna (drop across RFC2). If the antenna is of the type where it is at dc ground, RFC2 may not be required.

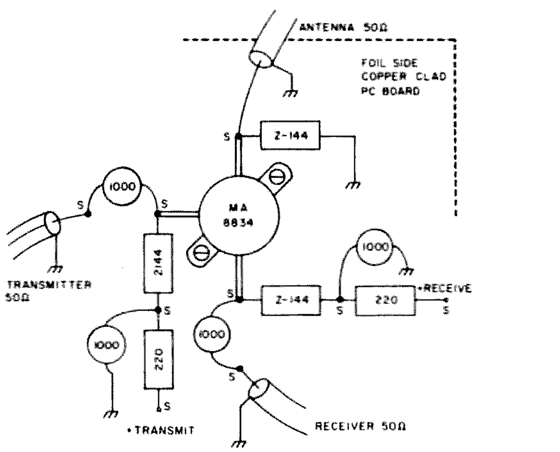

Fig. 2. This shows how the parts were laid out on a 2" x 2" PC board. The points marked "S" indicate insulated miniature standoffs. The ground signals indicate direct soldering to the board. Component layout is not at all critical, although leads must be kept short, as in any VHF circuit.

current flow, through RFC1 and RFC2. The same happens, of course, when the "+ transmit" terminal is used for the transmit line. A great advantage of this device is that when transmit/receive switching is done, a positive voltage need only be applied to the applicable terminal. The other terminal is left open-circuited; no bias voltage need be applied, as in some other diode switching schemes. The device is designed for 50-Ohm coaxial line or input/output impedance.

A practical realization of an antenna switching arrangement for 2 meters using the MA8334 switching diode is shown in Fig. 2. The details concerning its construction/operation are applicable when using it on other bands also.

The three rf chokes necessary have to be chosen for the band being used. For 2 meters, ohmite Z-144 chokes were used along with 1000 pF disc ceramic bypass capacitors and coupling capacitors. The circuit was constructed on a piece of single-sided copper-plated PC board. Short lead dress is necessary, and, if the circuit is used on frequencies above 144 MHz, feedthrough-type bypass capacitors should be used with the rf chokes in the "+ receive" and "+ transmit" lines. The positive voltage that must be applied to make the diode switch is that which will cause 50 mA of current to flow through the diode. So, a wide variety of positive voltages can be used. The resistors were chosen so that 50 mA of current flow takes place. In the unit shown, with its type of rf chokes and which operates from a 12-volt supply, the resistors are 220 Ohms.

An interesting characteristic of any rf switching device is the isolation provided between the two switched lines. This characteristic is not very important in the usual type of antenna transmit/receive switching operation as long as it is sufficient to prevent loading of input/output circuits and as long as enough transmitter power doesn't feed back into the receiver to do harm. However, this characteristic is important when switching such things as low-level filter circuits and, possibly, in some antenna selection switches. A properly-designed and expensive power-type coaxial switch will provide anything from 30 to 60 dB isolation in the VHF range. The MA-8334 provides 38 dB isolation at 144 MHz and about 29 dB at 420 MHz. Both figures assume careful circuit layout. It goes up to 45 dB at lower frequencies. So, it checks out quite well in this regard and will be much better than any of the power-type relays sometimes used for economy.

With all this performance, one might imagine that there is a wee price to pay. The price is insertion loss. Expensive coaxial switches and relays can do a bit better than the 0.2 dB loss the MA-8334 has up to 420 MHz. The loss means heat, of course, so the diode has to be connected to some heat-conductive surface. Very little surface is needed, since, even at the 50-Watt level, the loss is several Watts at the most. The metal tabs on the diode are not connected to any switch arm, so, as shown in Fig. 2, they can be bolted directly to a PC board or chassis. The layout shown in Fig. 2 was made to check the diode switch. In reality, of course, the components can be compacted much more around the switch, so the total volume occupied will be less than that taken up by a relay of similar power-handling capability.

This type of diode switch is being widely used now in commercial equipment, so it, or an equivalent, is available from distributors. However, you can write Microwave Associates, Northwest Industrial Park, Burlington MA 01803, if you have difficulty locating a source for the diode. ■

James F. Hartley W1DIS
U.S. Route 302
Raymond ME 04071

Shock the Car-Burglar!

—give him the gong

In the Holiday, 1976, issue of *73,* David Johnson WB6QDS had the burglar alarm system I had been waiting for. Only, on inspection of my 1971 Ford Torino, I found not ground at the door switch, but plus 12 volts. A change in attack was needed.

Also, the hood of my car unlocks at the front, allowing any burglar instant access to removing the wires from the horns. I didn't want to bother with wiring a hood alarm switch. I also thought that an alarm not sounding like a car with a stuck horn relay might be better. Then too, this car doesn't have a horn relay.

Radio Shack has a very loud gong-type of bell. This, located under the car out of reach, with or without the flasher in the circuit, sure makes enough noise to wake the dead and scare most thieves away.

I suppose the two fuses are unnecessary, actually, but I feel better with them in the circuit. Be sure the relay contacts used will carry the current expected of them by the alarm device. ■

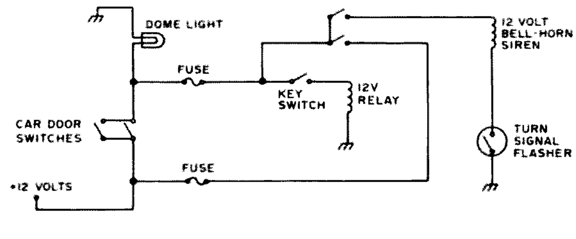

Fig. 1.

propagation

by
J. H. Nelson

EASTERN UNITED STATES TO:

GMT:	00	02	04	06	08	10	12	14	16	18	20	22
ALASKA	14	7A	7	7	7	7	7	7	7	14	14	14
ARGENTINA	14	14	7	7	7	7	14	14A	21	21	21	14
AUSTRALIA	14A	14	7B	7B	7B	7	7	14	14	14	14	14A
CANAL ZONE	14	7A	7	7	7	7	14	14A	21	21	21	14
ENGLAND	7	7	7	7	7	7B	14	14	14A	14A	14	7B
HAWAII	14	14	7B	7	7	7	7	7B	14	14	14	14A
INDIA	7	7	7B	7B	7B	7B	14	14	14	7	7	7
JAPAN	14	7B	7B	7B	7B	7	7	7	7	7B	7B	14
MEXICO	14	7A	7	7	7	7	7	14	14	14	14A	14A
PHILIPPINES	14	7B	7B	7B	7B	7B	7B	14	14	14	7B	14B
PUERTO RICO	14	7	7	7	7	7	7A	14	14	14	14	14
SOUTH AFRICA	14	7	7	7	7B	14	14	14A	21	21	14	14
U. S. S. R.	7	7	7	7	7	7B	14	14	14	14	7B	7
WEST COAST	14	14	7	7	7	7	7	14	14	14	14A	14A

CENTRAL UNITED STATES TO:

GMT:	00	02	04	06	08	10	12	14	16	18	20	22
ALASKA	14	14	7	7	7	7	7	7	7	14	14	14
ARGENTINA	14	14	7	7	7	7	7A	14	14	21	21	14A
AUSTRALIA	21	14	14	7B	7B	7	7	7	14	14	14	21
CANAL ZONE	14	14	7	7	7	7	7	14	21	21	21	21
ENGLAND	7	7	7	7	7	7	7B	14	14	14	14	7B
HAWAII	21	14	14	7	7	7	7	7	14	14	14A	14A
INDIA	7	7	7B	7B	7B	7B	7B	7B	14	7A	7	7
JAPAN	14	14	7B	7B	7B	7	7	7	7	7B	7B	14
MEXICO	14	7	7	7	7	7	7	14	14	14	14	14
PHILIPPINES	14	14	7B	7B	7B	7B	7B	7	14	14	7B	14
PUERTO RICO	14	7A	7	7	7	7	7A	14	14	14A	14A	14A
SOUTH AFRICA	14	7	7	7	7B	7B	14	14	14A	14A	14	14
U. S. S. R.	7	7	7	7	7	7	7B	7B	14	14	7B	7

WESTERN UNITED STATES TO:

GMT:	00	02	04	06	08	10	12	14	16	18	20	22
ALASKA	14	14	7A	7	7	7	7	7	7	14	14	14
ARGENTINA	14	14	7A	7B	7	7	7B	14	14	14A	21	21
AUSTRALIA	21	21	14	14	7B	7B	7	7	14	14	14	21
CANAL ZONE	14A	14	7	7	7	7	7	14	14A	21	21	21
ENGLAND	7	7	7	7	7	7	7B	7B	14	14	14	7B
HAWAII	21A	21	14	14	7	7	7	7	14	14	21	21
INDIA	7	14	14	7B	7B	7B	7B	7B	7A	7A	7	7
JAPAN	14A	14A	14	7B	7B	7	7	7	7	7B	14	14
MEXICO	14	14	7	7	7	7	7	14	14	14	14A	14A
PHILIPPINES	14A	14	14	7B	7B	7B	7B	7	7	14	7B	14
PUERTO RICO	14	14	7	7	7	7	7	14	14A	21	21	14A
SOUTH AFRICA	14	7B	7	7	7B	7B	7B	14	14	14A	14	14
U. S. S. R.	7	7	7	7	7	7	7B	7B	14	14	7B	7
EAST COAST	14	14	7	7	7	7	7	14	14	14	14A	14A

A = Next higher frequency may also be useful
B = Difficult circuit this period
F = Fair
G = Good
P = Poor

march

sun	mon	tue	wed	thu	fri	sat
			1 G	2 G	3 G	4 G
5 F	6 P	7 P	8 F	9 F	10 G	11 G
12 F	13 F	14 G	15 G	16 G	17 G	18 G
19 P	20 F	21 F	22 F	23 F	24 G	25 G
26 G	27 P	28 F	29 F	30 P	31 F	

MOVING?

Let us know 8 weeks in advance so that you won't miss a single issue of *73 Magazine*.
Attach old label where indicated and print new address in space provided. Also include your mailing label whenever you write concerning your subscription. It helps us serve you promptly.

Write to: **73 magazine**
Peterborough NH 03458

- ☐ Address change only
- ☐ Extend subscription
- ☐ Enter new subscription
- ☐ 1 year $15.00
- ☐ Payment enclosed (1 extra BONUS issue)
- ☐ Bill me later (I've signed below)

Signature ______________________

If you have no label handy, print OLD address here.

AFFIX LABEL

name ______________ call ______
address ______________________
city ________ state ________ zip ______

name ______________ call ______
address ______________________
city ________ state ________ zip ______

April 1978 $2.00

73 AMATEUR RADIO

PLUS 18 More Exciting Feature Articles (see page 5)

73

#211 APR 1978

Don't Miss the Petition on page 30

73 Magazine is published monthly by 73, Inc., Peterborough NH 03458. Subscription rates in the U.S. and Canada are $15 for one year, $26 for two years, and $36 for three years. Outside the U.S. and Canada, write for rates. Second class postage paid at Peterborough NH 03458 and at additional mailing offices. Publication No. 700420. Phone: 603-924-3873.

INCLUDE OLD ADDRESS AND ZIP CODE WITH ADDRESS CHANGE NOTIFICATION.

Microfilm edition — University Microfilms, Ann Arbor MI 48106.

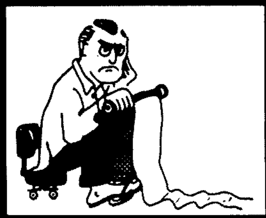

...de W2NSD/1

NEVER SAY DIE

EDITORIAL BY WAYNE GREEN

WASTED REPEATER CHANNELS

Will hams be satisfied before they reach that totally ideal situation of one repeater for each two meter operator? One of the more fundamental flaws in this scenario is that repeater owners *never* use any other repeater than their own, even when traveling. Thus, every time someone puts on a new repeater, this takes another user away from all of the existing area repeaters ... and our ideal situation will not only have one person per repeater, but will also thus include no rag chewing or contacts ... just people occasionally kerchunking their repeaters to make sure they are still working.

In this case, we should be able to economize on channels to some extent. A repeater used only five minutes a day for testing could coexist with hundreds of others on the same channel, providing some means of tone activation of the receivers was used ... repeater owners don't want to be bothered listening to other repeaters on the channel being kerchunk ... hello test ... kerchunked.

In the interim, before we start trying to fill up the 144 MHz segment of the band with repeaters, let's try to use some common sense and more adequately use the 53 channels we already have set up. The fact is that most of the repeater channels are being occupied by seldom-used repeaters. The small groups using these channels will put up vigorous fights to retain their channels, even though they are rarely using them. They are providing little benefit for amateur radio in general and not much for themselves, outside of a bit of ego massage.

Though I prefer to come to you with proposed solutions to problems rather than with problems and no solutions, in this case I'm wide open for any ideas. I know the present system is terrible. Sure, we have repeater coordinating councils, but in most cases they are working on the basis of repeaters and channels, with not much consideration given to the actual use of a channel. Indeed, we don't have any concepts as yet developed about what does constitute a used channel and what doesn't. How much right does a group of three people have to exclusive use of a frequency pair for their repeater ... which is used perhaps once or twice a day for a few minutes?

Perhaps some system could be tried where coordinators would stack repeaters with smaller groups on the same channel, but with continuous tone separation. Yes, I know this is happening already in some areas, but the fact is that very few coordinators are doing this so far and expansion into the 144 MHz segment is a very poor substitute for cooperation.

Let's do all we can to keep repeater growth sane ... to discourage the frivolous setting up of repeaters ... and leave the 144-146 MHz part of the band for other developments, at least until it is really needed for repeaters ... which is still a long, long way off.

So, should the FCC again move to deregulate the lower part of the two meter band, I plead for a moratorium on repeater allocations there ... a bit of brainstorming on ways to better utilize the band we are already only partially using ... and some test projects to see if cooperation can be achieved between repeater groups sharing channels.

THE YELLOW PERIL

Some U.S. manufacturers of ham equipment are trying to get restrictions on the importing of ham gear from Japan. What is the problem? Is it that we are not able to keep up with Japan technically ... that they are able to out-engineer us? Is it that they are able to work more efficiently than we can?

Japanese firms have their own problems which work to bring up their costs. It is not inexpensive to ship equipment an extra 10,000 miles to be sold. Then there are the import duties which have to be paid. Add to that the costs of warehousing here so shipments to dealers are not overly delayed. Service must be set up ... a not inexpensive project so far from the factory ... complete with parts and technician training.

U.S. firms are much better able to meet sudden changes in the market. Look what happened to Japan when CB sets stopped selling. It took months to slow down the pipeline. Even after the production lines stopped making sets, there were millions of CB sets ready for shipment, on ships coming across the Pacific, and on piers on the U.S.

The most basic truth of international trade is that if we want to sell our equipment in Japan, we have to let them sell theirs here. If we don't, they won't have the money to buy ours. And if you don't think they are buying American ham gear in Japan, you just haven't talked to many Japanese hams.

I can be quite critical of Japan for the import restrictions on some goods, but then they are paying the price for this protectionism. When they let the balance of trade swing too much one way or the other, the relative value of the currencies changes to even it out. This increases the cost of Japanese equipment for us and decreases the cost of American equipment for them ... until things are back in balance again.

THE LONG-RANGE DISASTER

The recent snowstorms in the midwest and Boston area reconfirmed the value of amateur radio under emergency conditions. Hams were right in the middle of everything, from the beginning ... and they performed well.

In the Boston mess, there were hams among the 3000 cars stranded on perimeter Route 128. This helped officials know just what was going on at different locations along that route and to keep up communications with groups of stranded cars. You may have read about the pilot boat which was lost with five people aboard going out to try and rescue sailors from a stranded oil tanker. One of them was a ham and he kept those ashore in touch with what was going

LETTERS

ANTI-SEMANTICISM

W3ZVT's otherwise excellent article, "Ham Shack Anthropometrics," is somewhat marred by its title. It's unfortunate that the term "anthropometrics" has been so badly warped into almost erroneous common (mis)usage. "Anthropometrics" means, in its strictest sense, "measurements of the human body to determine differences in races, ethnic origin, individuals, etc..."

I would like to suggest an alternative, since I chose to make a minor criticism in the first place. "Ham Shack Ergonomics" tells it like it is. I hope this doesn't open up a semantic debate, but rather a new avenue of future *73* articles.

Don Ore WB9CMT
Flossmoor IL

Let's not have any anti-semanticism around here.—Wayne.

STERN KICK

Joe Vicere
Bristol VT

Dear Joe:

Here is one ham who hopes this "kick in the stern" you asked for will be enough to make you "get with it" ("Ham Help," January, 1978, p. 19).

You sound like a smart guy, and I have been in Vermont enough to know that northern Vermont is more than "pucker-brush!" Vermont has a goodly number of fine hams whom I have gotten to know in the sixteen months that I have been a ham.

In July, 1976, I got the silly idea that I, too, was tired of the things that tired you, and that I would like to become a ham. I was seventy-two years old, and that's just too old to start learning new tricks... much less such a complicated thing as code! But like a chump, I asked George Lange K5CAT, an Extra here in Muskogee, Oklahoma, if he thought I could ever become a ham, and if so, would he help me.

George said, "If you will do what I tell you to do, I can get you past the Novice code test in five weeks... and in ten weeks you can be a full-fledged Novice." I didn't believe him, and still don't, but...

George and I organized a ham class in our church recreation building and we met... ten of us... each Thursday evening for a couple of hours. In *five* weeks, George surprised us with a code test, and we all passed but *one* ... and he was a high school boy with a chronic case of girlitis.

Late in August, we took our theory written test and all of us passed. One of the class took the Tech theory, and he, too, passed. One year later, at the age of 73, I took my General and got that thrill of all thrills when the FCC examiner looked up from my test papers and said, "You made it!" Out of the ten, six or seven of us are Generals... a couple are Techs and a couple took leave of the ham shack in favor of college.

Anyone can learn code if he is of a mind to... and any ham will help you. WA1NSY, a professor at the University of Vermont, lives not too far from you. WA1LXL lives in Marlboro and W1MRJ is a flight instructor and former FAA flight controller... any one of those three would give you a kick in the stern to get you on CW. And you'll never know how you will like it until you try it.

Loren Carlberg WB5WDG
Muskogee OK

P.S. I am not the only old buzzard who started late on his code. In my class was a guy who is now WB5WDD. He's almost as old as I am and he's a General now, too... but we both still prefer code to mike. You don't need a kick in the stern to start you... what you need is a kick in the stern because you haven't started yourself. It's there for you with plenty of help just for the asking. That's what hamming is all about.

CALCULATING POWER

The article in the February issue by K4TWJ was well written, but did show that he apparently does not understand how to calculate the power input of his station and unknowingly operates in excess of the 1 kW legal limit.

In part, rule 97.67a states that the power input shall not exceed 1 kW as measured feeding "the vacuum tube or tubes supplying power to the antenna."

In a grounded grid amplifier, the cathode circuit is driven (which is in series with the plate and output circuits). It can be shown that considerable driving power is coupled through the PA to the antenna. Therefore, the exciter output tube input must be included in the power input calculations because it is coupled to and supplies power to the antenna.

If it is assumed that the author's four 811As were operated with a 1 kW dc input and that the TR-4CW was operated at its full rated CW input, then the dc input power of the tubes supplying power to the antenna was 1260 Watts. These assumptions are consistent with the author's stated measured rf power output of 850 Watts.

Dick Wilder W3DI
Crownsville MD

Maybe he's using it on the HF band, where 1 kW is known as QRP.—Wayne.

AFTER 55 YEARS

Yesterday, the mailperson left a strange-looking envelope in my mail box. Inside was something I have been waiting for for over 55 years. Yes, over 55 years ago when I was 12, an old man of about 18 who was a ham tried to teach me the code at about 50 words a minute—or so it seemed. As I did not learn it in about 10 minutes, he told me I was dumb and would never get my license. Several times in the years gone by I have tried to, but it was no use. Several things got in the way, like a little depression with two daughters to raise, then a couple of wars, then a heart attack and forced retirement. I needed something to do with my time, so I started building radio control models. After the loss of several airplanes due to outlaw CB transmitters on 27 and 72, I was told to get on 53, but another hitch came up—I must have a ham license. So I sent away for a Heathkit Novice course and joined the Sun City ham club. After several months of practice with the Heathkit tapes, I got nowhere. I kid you not, at 68 it is hard to study. Anyway, someone mentioned your tapes, so after two months I am now WD6EZM. I have sent for your 13 and 20 tapes, as I am going to get my General. I also have subscribed to your magazine for three years. Also, one of my best investments for information is that I sent for a lot of your back issues. I enjoyed the Ancient Aviator very much, as I spent most of my working life as a mechanic and inspector on airplanes. I have worked in the Congo, Libya, England, and several other places, and am retired from Pacific Southwest Airlines.

Harold R. Gallant **WD6EZM**
Sun City CA

Don't get mad, Heath. We get ten times as many complaints about the ARRL tapes, but people always think we're picking on the ARRL, so we don't publish those gripes very often. The poor picked-on League.—Wayne.

SWLING

I would like to write a few words encouraging you to continue publishing occasional articles of interest to those of us who enjoy listening to the international shortwave broadcasts. The January "Looking West" column with Bill Pasternak's sidelight on Radio Nederland was especially welcome, as was the review of the Sony ICF-5900W general coverage receiver in the February issue.

As a regular listener to shortwave broadcasts, I may be somewhat biased. However, I feel that those hams who have not recently listened to the shortwave bands are missing a lot of useful and entertaining information. For example, WARC '79 has received considerable air time over the past year on many of these stations. In addition, since many of the stations speak for the government of the country involved, it is quite easy to see the political situations that are likely to develop at WARC '79.

Finally, I would like to point out one item of common courtesy. Answer QSL requests from SWLs as you would from any other ham. I got started in ham radio by being involved as an SWL, with some help from the local amateur radio club. With a little help and encouragement, hams and SWLs can share in two interesting and educational hobbies.

Gregory W. Smith **WD9GAY**
Woodridge IL

You can order more QSLs from 73 for those SWL reports.—Wayne.

CONTESTS

Editor:
Robert Baker WB2GFE
15 Windsor Dr.
Atco NJ 08004

TENNESSEE QSO PARTY
Contest Periods:
2100Z Saturday, April 1 to 0500Z Sunday, April 2
1400Z to 2200Z, Sunday, April 2

Bonus period April 2 from 0500Z to 0600Z for out-of-state stations only to work Tennessee mobile and portable stations only on 75 meters.

EXCHANGE:

Tenn stations send signal report and county. Out-of-state stations send signal report and state, province, or country. Work same station different bands or county if mobile or portable.

SCORING:

Separate CW and phone contests (one point each contact). Tennessee stations—QSO points times sum of (different states including Tennessee plus different provinces plus different Tenn counties).

Out-of-state stations score 1 point per QSO, 3 points per mobile/portable. Final score = QSO points times number of different Tenn counties.

Bonus points—200 extra points to mobiles and portables for each county operated outside home county (10 QSOs min.).

FREQUENCIES:

3550, 7050, 14050, 21050, 28050, 3980, 7280, 14280, 21380, 28580.

LOGS:

Date/time in GMT, station worked, band, mode, exchange, and score. Use separate log sheet for each band over 25 contacts; contestants with 100 contacts or more must submit cross-check sheet similar to ARRL operating aid No. 6. Logs must be legible to avoid disqualification.

AWARDS:

Plaques to top phone and CW scores in Tennessee, to winning mobile, to winning portable, and to top score out of state. Certificates to every station sending log with 15 contacts. Repeater contacts not allowed. Mobiles compete against mobiles, portables against portables. Minimum 10 contacts each county to earn bonus points.

Tennessee stations on phone call "CQ Tenn QSO Party," on CW "CQ Tenn" or "TEST"—variations to encourage contacts from non-contestants will result in disqualification.

Mailing deadline May 1, 1978. Send self-addressed stamped envelope to Dave Goggio W4OGG, 1419 Favell Dr., Memphis TN 38116.

ANNUAL APRIL QRP QSO PARTY
Starts: 2000 GMT Saturday, April 1
Ends: 0200 GMT Monday, April 3

The contest is open to all amateurs and is sponsored by the QRP Amateur Radio Club International, Inc.

Stations may be worked once per band for QSO and multiplier credits. Each member QSO counts 3 points, non-member QSOs, 2 points. Stations other than W/VE count as 4 points per QSO. Multipliers are as follows: More than 100 Watts input power—x1; 25 to 100 Watts—x1.5; 5 to 25 Watts—x2.0; 1 to 5 Watts—x3.0; less than 1 Watt power—x5.0.

Final score is QSO points times total number of states/provinces/countries *per band* times power multiplier.

EXCHANGE:

Members—RS(T), state/province/country, QRP number.

Non-Members—RS(T), state/province/country, power.

FREQUENCIES:

CW—3540, 7040, 14065, 21040, 28040.

SSB—3960, 7260, 14300, 21360, 28600.

Novice—3720, 7120, 21120, 28040.

All frequencies ±5 kHz.

ENTRIES:

Send full log data, including full name, address, and bands used. Indicate equipment, antennas, and power used. Include a #10 SASE for results. Logs must be received by May 30, 1978, to qualify. Send logs to: E. V. Sandy Blaize N5BE, 417 Ridgewood Drive, Metairie LA 70001.

Certificates will be awarded to the highest scoring station

CALENDAR

Apr 1-2	**Tennessee QSO Party**
Apr 1-3	**QRP QSO Party**
Apr 8-9	**Open ARRL CD Party—CW**
Apr 11-12	**DX to W/VE YL CW Party**
Apr 15-16	**County Hunters SSB Contest**
	ARRL CD Party—Phone
Apr 21-30	**Holiday-In-Dixie Festival QSO Party**
Apr 22-23	**Zero District QSO Party**
	Bermuda Contest
Apr 25-26	**DX to W/VE YL Phone Party**
Apr 29-30	**PACC Contest**
May 6-8	**Georgia QSO Party**
May 13-14	**Massachusetts QSO Party**
May 20-22	**Kansas QSO Party**
June 3-4	**IARS/CHC/FHC/HTH QSO Party**
June 10-11	**ARRL VHF QSO Party**
June 17-18	**West Virginia QSO Party**
June 24-25	**ARRL Field Day**
June 24-25	**First REF Ten Day**
July 1-2	**7 Land QSO Party**
July 4	**ARRL Straight Key Night**
July 8-9	**IARU Radiosport Competition**
July 15-16	**VHF Space Net Contest**
Aug 19-20	**New Jersey QSO Party**
Sept 9-10	**ARRL VHF QSO Party**
Sept 16-17	**Scandinavian Activity Contest—CW**
Sept 23-24	**Delta QSO Party**
	Scandinavian Activity Contest—Phone
Oct 14-15	**ARRL CD Party—CW**
Oct 21-22	**ARRL CD Party—Phone**
Nov 4-5	**ARRL Sweepstakes—CW**
Nov 18-19	**ARRL Sweepstakes—Phone**
	Second REF Ten Day
Dec 2-3	**ARRL 160 Meter Contest**
Dec 9-10	**ARRL 10 Meter Contest**

RESULTS

RESULTS OF THE 1977 INTERNATIONAL POLICE ASSOCIATION '77 CONTEST
November 12-13

First place IPA member was DJ8RK with 6498 points.
First place Non-IPA was DA2DC with 688 points.
First place SWL was HE9ILN with 1914 points.

Of the three US entries, WB4QJO finished top with 1440 points and 11th place overall.

Heinz DJ8RK, the first-place winner of the 1977 IPA Contest. He is active on CW and SSB, but prefers high-speed CW work.

RESULTS

RESULTS OF THE 1977 DELTA QSO PARTY

High score from within Delta division—K5GO with 73,219 points (1003 QSOs).
High score from outside Delta division—K9BG with 10,692 points (162 QSOs).
(This is the second year in a row for K9BG, formerly WB4OGW.)
High score club station—WB5NEX with 35,564 points.
High score mobile station—WA5KQN with 13,158 points.

Delta Division:		
ARK	K5GO	73,219
LA	WB5NEX	35,564
MISS	K5SVC	45,298
TENN	WB4FPH	25,500
First District:		
CONN	W1GNR	2,312
EMASS	W1AQE	1,848
VT	K1ORS	875
Second District:		
ENY	W2WSS	350
NLI	W2RPZ	2,183
NNJ	K2PF	960
SNJ	N2CM	300
WNY	N2RT	1,643
Third District:		
DEL	W3JZA	368
EPA	WA3GNW	672
MD	W3PYZ	924
WPA	W3HDH	665
Fourth District:		
GA	WB4RUA	736
SC	N4LM	540
VA	WD4IMB	1,479
Fifth District:		
NMEX	K5MAT	665
NTEX	W5GVP	580
STEX	K5TM	2,556
Sixth District:		
ORG	N6MU	950
SDGO	WA6ORJ	110
SBAR	K6XO	276
Seventh District:		
ARIZ	WA7WOC	294
MONT	W7JYW	3,840
NEV	W7HI	703
Eighth District:		
MICH	W8WT	1,056
OHIO	K8EKG	1,922
Ninth District:		
ILL	K9BG	10,692
IND	WB9ZEZ	266
WISC	K0CHE/9	594
Tenth District:		
IOWA	WB0VCP	888
MO	WB0SAA	946
NDAK	WA2DJM/0	36
Canada:		
ONT	VE3CDK	1,590
MAN	VE4EA	1,014
DX:		
BRAZIL	PY1DBE	64

in each state/province/country; other places depending on activity. One certificate for the station showing three "skip" contacts using the lowest power.

COUNTY HUNTERS SSB CONTEST
Contest Periods:
0001 GMT Saturday, April 15 to 0800 GMT Saturday, April 15
1200 GMT Saturday, April 15 to 0800 GMT Sunday, April 16
1200 GMT Sunday, April 16 to 2400 GMT Sunday, April 17

Please note two four-hour rest periods!

This is the 7th annual contest sponsored by the Mobile Amateur Radio Awards Club, Inc. Mobile stations may be worked each time they change counties or bands, but if worked again from the same county on a different band count for point credit only. Mobile stations contacted on a county line count as one contact but two multipliers. Portable stations will be considered *fixed* stations. Fixed stations may be worked by other fixed stations only once during the contest regardless of bands. Repeat contacts between fixed stations on other bands are not permitted! Fixed stations may be worked by mobile stations each time they

Continued on page 58

RESULTS

RESULTS OF THE 1977 DELAWARE QSO PARTY
November 12 and 13, 1977

Out-of-State Scores
***Denotes state winner.**
****Denotes high score for out-of-Delaware station.**

State	*Station*	*Score*	
Ala.	W4RAL*	150	tie
	WB5SLC/4*	150	
Alaska	KL7IXZ*	5	
Ariz.	N7MM*	600	
Cal.	WB6JQP*	525	
Conn.	W1VH*	400	
Florida	WA4RRB*	200	tie
	K4TF*	200	
	K4YS*	200	
Idaho	W7GHT*	325	
Ill.	W9QWM*	325	
Iowa	WB0TLE*	625	
Ky.	W4KFB*	400	
Maine	WA1ZAX*	525	
Md.	W3AKD**	725	
Wash D.C.	K3KWJ*	200	
Mass.	W1ATO*	300	
Mich.	WD8CYR*	600	
Minn.	W0PEC*	200	
Mo.	WB0QZY*	100	
N.J.	WA2ZWH*	400	
N.Y.	N2JJ*	375	
N.C.	WA4LWO*	375	
Ohio	K8TH*	325	
Oregon	WB7BVG*	400	
Pa.	WB3BKV*	200	tie
	W3ZID*	200	
Tenn.	W4DGX*	105	
Texas	W5HNS*	650	
Vermont	K1IK*	150	
Va.	N4LE*	200	tie
	W4ZRJ*	200	
W. Va.	WD8EHZ*	150	
Wisc.	WB9PVI*	575	
Canada	***Station***	***Score***	
Ontario	VE3DAP*	450	
	VE3CDK	300	
Manitoba	VE4RF*	400	
Br. Col.	VE7DSA*	675	
Country	***Station***	***Score***	
Japan	JA2HLX*	90	
	JA2HGA	60	

Delaware Scores
***Denotes county winner.**
****Denotes high score for Delaware.**

New Castle Station	**Score**
WA3WPY*	6636
K3BBR	5775
W3TCI	5640
Kent Station	**Score**
K3SXA/3**	23199 multi-op
K3SXA/WA3QLS (ops)	
W3CTM*	286 single-op
Sussex Station	***Score***
K3JL/3*	14575
W3WLO	8802
WA3WIY	4620

FCC Math

John F. Leahy WB6CKN
P.O. Box 539
Gonzales CA 93926

In this and the final installment of our series, we'll be putting some finishing touches on the math edifice we've been constructing and in the process pick up some additional symbolism and techniques.

By now, you may have gained a bit of confidence if you did not have such in the past. And if you're still not too confident, at least you can see that by going back to elementary school arithmetic, back to beginnings, we can spin out all the stuff we need, without all that much difficulty. It's just a matter of going slowly, practicing, questioning, reviewing, playing around with numbers, and, above all, refusing to become uptight. (A can of beer or two can be a real help sometimes!)

One of the symbols we run into every so often in electronics is $\sqrt{\ }$, called the *radical sign. Radical* comes from the Latin for *root*, and $\sqrt{\ }$ means square root. It's just the reverse of squaring. 4^2 (four squared) is 4 x 4 or 16. Well, $\sqrt{16}$ means the number which multiplied by itself equals 16, namely 4. So we can write $\sqrt{16} = 4$. Similarly, $\sqrt{9} = 3$, $\sqrt{49} = 7$, $\sqrt{100} = 10$, $\sqrt{10{,}000} = 100$ and $\sqrt{1{,}000{,}000} = 1000$.

Last time, we saw that at resonance the reactance of the coil equals the reactance of the capacitor, from which we got: $2\pi fL = 1/(2\pi fC)$. We solved that equation for capacitance (got the C up by itself on one side with everything else on the other). But supposing we had been asked to solve for f, frequency. The problem is that there are *two* f's. How do we handle a situation like that? Following the rules we developed, we get $ff = 1/[2(2)\pi\pi LC]$, which at least gets the f's by themselves on one side (the two f's mean f times f or f^2, as usual). Using squares, we might write that: $f^2 = 1/[(2\pi)^2LC]$. The $(2\pi)^2$ means that both the 2 and the pi are squared (multiplied by themselves). We could then substitute whatever values L and C have into the right-hand side, and work that side out to a single number, so that we had f^2 = some number. But where do we go from there? Well, let's take an example. Suppose $f^2 = 100$. Then doesn't $f = 10$? Because f^2 would then be 10 x 10, which is 100. So f, then, equals simply the square root of whatever is on the right-hand side. Going back, $f = \sqrt{1/[(2\pi)^2LC]}$. Since there is only multiplication and division on that right-hand side (no addition or subtraction), we can apply the radical to each part. $\sqrt{1} = 1$. $\sqrt{(2\pi)^2}$ = simply 2π, and $\sqrt{LC}$ is just $\sqrt{LC}$. That gives us the relatively important formula for a resonant circuit: $f = 1/2\pi\sqrt{LC}$.

If there had been addition or subtraction of the right-hand side above, we could not have applied the radical sign to each part separately. Note, for example, that $\sqrt{25 + 9} \neq \sqrt{25} + \sqrt{9}$. $\sqrt{25 + 9}$ is less than 6 (because $\sqrt{36}$ is 6 and 25 + 9 is just 34), whereas $\sqrt{25}$ is a 5 and $\sqrt{9}$ is 3, and 5 + 3 = 8. Try things out with numbers if there's any question, and you'll seldom go wrong.

And if you're not certain that $\sqrt{1} = 1$, just recall that 1 x 1 = 1. Likewise, $2\pi \times 2\pi = (2\pi)^2$. (Notice that I have to use parentheses there, because if I didn't you might think that just the pi was squared, not the 2.)

Summarizing what we just saw, we can establish the rule that where things are squared we solve by finding square roots. Another example: $P = E^2/R$. Say we have to solve for E, voltage. Using the algebra we've developed, we'd get $E^2 = PR$. Then we apply the rule above to get $E = \sqrt{PR}$, voltage equals the square root of the product (what we get from multiplying) P and R, power times resistance.

But, of course, all this implies that we know how to find the square root of numbers of all sizes. Lots of calculators have square root buttons. And there's an algorithm (a neat little process) for finding square roots in a fairly straightforward fashion in most algebra books. We'll assume you don't have such a calculator and don't know the algorithm. Since FCC exams usually require no more than one- or two-digit accuracy, we'll look at the simplest technique, namely trial and error, for finding these roots.

Say you've worked the resonance formula to the point where you've found L times C to be 0.0000000000086 (8.6×10^{-12}). Look closely at that power of ten. Notice that it's a multiplication. We just saw that where there's just multiplication or division you can find the square root of each part separately. Now 8.6 is very close to 9, and $\sqrt{9}$ is 3. But what about that 10^{-12}? Well, $(10^{-6})^2$ means $10^{-6} \times 10^{-6}$, and from our rules for powers of ten we get $10^{-6 + -6}$, or 10^{-12}. Since this kind of thing happens every time, you can see where our rule about halving comes from. The square root of 8.6×10^{-12}, then, is about 3×10^{-6}, 0.000003.

But what do you do if the exponent of 10 is not an even number? What if we're trying to find the square root of 7.2×10^{11}, for example? In our next installment, we'll play around with things called logs (not the wooden variety). Logs is short for logarithms. And all logs are weird powers of ten, weird exponents of ten, more precisely, like 5.5 which is half of 11. but where we're at, we employ a little trick that we've already seen in another context, in changing *micros* to *nanos*, for example. We've seen that 0.07 microfarads is the same as 70 nanofarads. $0.07 \times 10^{-6} = 70 \times 10^{-9}$. No doubt you'e been puzzled by these things, and rightly so, since I've never clearly explained what's going on. So here goes!

Again, it's the old "multiply by *one* in some clever form" trick. Take that 0.07×10^{-6}. Multiply the left part by 1000, and divide the right by 1000. 0.07 x 1000 is 70. 10^{-6} divided by 1000 is 10^{-6} divided by 10^3. We subtract exponents to get 10^{-9}. Put them together and we have our 70 nanofarads. We multiplied the original number by 1000 and divided it by 1000. In other words, what we did to one part of the number we *un*did to the other part. Looked at another way, we multiplied by 1000/1000. The multiplication was the top 1000, and the division, the bottom.

Pull the same kind of trick on our 7.2×10^{11} and we get, for example, 72×10^{10} (can you figure out how I did that?*). Now we can easily get the square root. $\sqrt{72}$ is about 8.5 ($8^2 = 64$; $9^2 = 81$; 72 is about halfway in between). Divide the exponent, 10, by 2 to get 5. Put them together and we have our square root, 8.5×10^5 or 850,000.

We haven't seen much trial and error so far. It's getting that first part, the 8.5 in the example above, that's often a matter of trial and error. When you're not sure just what that first part should be, you *guess*, and then multiply your guess by itself (the simplest calculators are helpful). If it's not close enough to the square you started off with, you try another guess. 8.5^2, for example, is 72.3, plenty close to 72 for most purposes. But you might have tried 8.4 or 8.6 or something in an altogether different ball park, for that matter. Any of those multiplied by itself would have given squares further away from 72 than 8.5 gave. Just by trying out different guesses, you can get as close to an exact value as you need.

Now here's an exercise for you. Answers (with work) at the end, as usual.

Exercise 1:

(1) Solve for I: $P = I^2R$

(2) Using the formula you just derived, find I when P = 5 W and R = 200Ω

(3) Find these square roots using powers of ten: (a) 382 (b) 0.000018 (c) 520,000,000 (d) 0.0000000000047

We have several times referred to the fact that when there are additions or subtractions in a fraction one cannot perform certain operations and get correct answers. $R_t = R_1R_2/(R_1 + R_2)$, the formula for computing the equivalent resistance of two resistors in parallel, is a case in point (and there's a bunch of other formulas, reactance, inductance, etc., of the same form). Let's go to a number equation to help us out here: 2 = [3(6)]/(3 + 6). In other words, there's 2 Ohms' resistance across parallel 3- and 6-Ohm resistors. We're trying to discover what kinds of wiggling we can do with an equation like this and still come up with true equations. It's easy to find lots of things one can't do! For example, I can't bring the 3 or 6 up from the bottom of the right side to the top left separately. 2(3) ≠ [3(6)]/6, for example, nor does 2(6) equal [3(6)]/3. Play around with it, and you'll find lots of others that don't work.

Sooner or later, though, you'll probably stumble upon some that work. 2(3 + 6) = 3(6) is one such. Here the 2 multiplies both the 3 and 6 on the left side. In other words, 2(3 + 6) = 2(3) + 2(6) or 2(3 + 6) = 2(9), and either of those equals the 3(6) on the right. Play around with a few like this, and you'll see that where there are additions and subtractions you're okay as long as you move the things added or subtracted as a *unit* if they're on the bottom of a fraction. We brought the 3 and 6 up together, with the + sign between them.

So what? Now that we have that stuff up on the left, what do we do? Well, often enough we know what the total resistance we want is, and we're after the value of resistance to put in parallel

Continued on page 182

*Multiply the 7.2 by 10, divide the 10^{11} by 10 (which is 10^1).

RTTY Loop

Marc I. Leavey, M.D. WA3AJR
4006 Winlee Road
Randallstown MD 21133

Last month we considered the requirements for systems to store information generated on RTTY. Seven criteria were presented and elaborated upon. This month we will investigate various methods in use and see how they stack up against these criteria. As a recap, the factors were:

1. Ease of entering data into storage;
2. Ease of inspecting stored data;
3. Ease of editing stored data;
4. Ease of removing data from storage;
5. Volatility of storage form;
6. Cost and availability of technique;
7. Interchangeability between users.

Now, let's see what's around.

The first method I shall call the "tear-sheet method." This involves tearing the page from your page printer, after receiving something worthwhile, and putting it in a folder for safe keeping. A related technique, the "strip-rip method," is used for ticker tape fanciers or voyeurs and shall not be discussed in detail here. Let's see how this method meets those criteria. It certainly is easy to enter data into storage, requires no additional effort, and stored data is readily inspectable. Unless the shack burns down or your wife goes on a cleaning rampage, the record is quite nonvolatile. The technique is free and available to just about anyone, and a Xerox® copy could certainly be made to interchange between users. But . . . unless you are a very good, fast, and accurate typist, there is no easy way of retransmitting the stored information. Also, while the record may be edited with pen or (blue) pencil, production of a new error-free record requires manual retyping of the whole. While the deficiencies in this technique make it impractical for on-line storage and retrieval, it does have some uses. This is the most convenient technique for storing information which will not be retransmitted. Typically, that would be material such as bulletins or third-party traffic received for delivery.

The most widely used methods of information storage in amateur RTTY involve paper tape that is 11/16 of an inch wide. They all share certain features, which will be discussed jointly. Transmission of data contained on paper tape requires a tape reader or transmitting-distributor. With a TD, data is sent without difficulty at machine speed. Paper tape is relatively nonvolatile, although the oiled tape generally in use does deteriorate after several years. Tape is fairly cheap and easily available, as is equipment to produce and read it. Of course, five-level Baudot tape is encoded in a standard format, and tape can be swapped without problems. There are different means of producing tapes, however, and that's where the rub lies.

A device which produces punched paper tape from a keyboard is called a "perforator." While possessing all those advantages enumerated for tape techniques in general, the "perforator method" has one serious drawback. Information cannot be recorded as it arrives, but only from manual input. This makes the perforator method suitable only for origination of material for later transmission. Although a copy of the material stored can be produced by running the tape through a TD in a local loop, changes entail retyping the entire tape manually, a tedious process.

With a "reperforator," arriving signals may directly control the tape punch, and storage is at machine speed. This "reperf method" thus comes closer to our ideal, with the exception of being able to read the stored data without an intervening step. The "typing-reperf method" takes care of that by adding a mechanism to type the text directly on the tape. Some machines type on the top of chadless tape, while others punch the holes clear out and print the letters near the sprocket holes. Corrections or changes may be entered by having the TD control the reperforator and stopping the tape to manually enter changes.

By the way, while we're on the topic of tape, there are really two types of tape to be found in Baudot systems. The 11/16-inch tape we have been describing is the Teletype Corporation's system, while the Kleinschmidt machines use tape that is 7/8 of an inch wide. While both of these tapes are Baudot-encoded, they are not interchangeable and must be used on their respective machines. This means, of course, that a Teletype TD is not compatible with a Kleinschmidt perforator and vice versa.

While, with the typing-reperf method, it may appear as though we have reached our ideal, there are still several problems. These tape readers and punches are large noisy mechanical beasties that collect dust and have to be cleaned, lubricated, and adjusted often or they go wacko. And, while they are reasonably available, there is often no local source for them and, heaven forbid, just about no way to home brew one. Also, although tape is quite sturdy, it does break and tear. A half hour of transmission requires 900 feet of tape, and there is frequently no place to unwind and wind it all! Further, what do you do if you run out and can't get any locally?

What we need is a dense, cheap, and readily-available recording material that behaves like paper tape. Enter the cassette! Recording the RTTY as AFSK and recovering the signal by conventional AFSK reception techniques is a viable alternative to paper tape. The primary disadvantage is that the playback will be at the same speed as it is recorded. That is, if typed in hunt-and-peck style at 20 wpm, it will come out that way. Its primary advantage is its density for storing great quantities of material (a C-30 versus 900 feet of paper) which may have originally been contained on punched paper tape, such as for archival storage.

Fig. 1 is an attempt to order these techniques to show that each has its own niche in the scheme of things. There are other techniques than those mentioned here, but, for the most part, they do not apply to the amateur applications. One notable exception is digital storage in read/write memories, but we will pick that up later in this series.

I appreciate the questions received from readers, and am trying to answer as many of general interest as possible in the pages of *73*. A self-addressed stamped envelope must accompany requests for a personal reply. Next month, we will look into different kinds of fun with a Teletype™ machine.

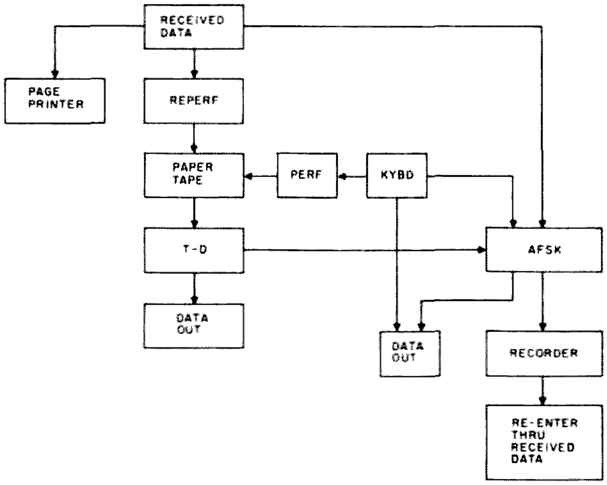

Fig. 1. Data storage.

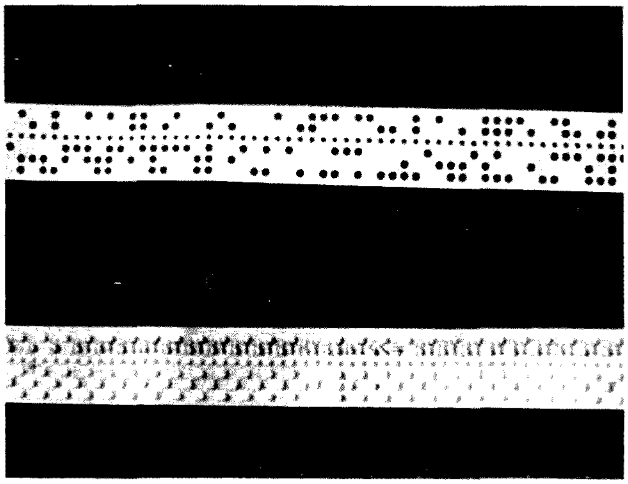

Paper tape—chad versus chadless with typing.

Looking *West*

Bill Pasternak WA6ITF
24854-C Newhall Ave.
Newhall CA 91321

SAROC was a waste; CES made the trip to Vegas worthwhile; and a bit more on international SWLing: all this and more (?) in this month's "Looking West."

DOWN THERE REVISITED DEPARTMENT

My postal delivery lady must hate me. While she is used to delivering all sorts of envelopes and packages, never before did it amount to a bit of an "envelope rush." It seems that my "LW" dealing with international shortwave listening struck a sweet note in the minds of many. Daily, the responses roll in; to date, every one of them has been positive. If that particular "LW" brought some real joy to many of you, then I'm very glad I wrote it.

In the months since that was written, I have updated the "LW" "SWL position" to a more modern receiver, from Radio Shack. It's called their Realistic Model DX-40 and, for an under-$50 radio, it sure runs rings around most of the older tube-type equipment of the fifties and early sixties. While I freely admit that this is far from the ultimate in SWL receivers and I would not mind owning either the Kenwood or Yaesu entries in the SWL field, for the price, the DX-40 is hard to beat. It, along with 100' of wire, has given me back the world—and it's sure a nice place to visit.

One of the nicest pieces of mail in this regard was a copy of *Happy Station Fan Club* DX magazine published in Adamstown, Pennsylvania, by an amateur named Larry McKinney WB3FJO. Subtitled, "Smiles Across the Miles," this very professional-looking publication features a basic course in amateur radio theory along with many other features dedicated to international SWLing in general and Radio Nederland in particular. Larry gets $6 a year for US membership and $10 for overseas. If you want more information on the Happy Station Fan Club, write Larry at 424 Grant Road, Adamstown PA 19501. If you get the feeling that his magazine impressed me, you are right. It did.

OVER THE MOUNTAINS AND ACROSS THE DESERT TO LAS VEGAS WE GO DEPARTMENT

Yep, it's that time of year again, so we hop into the Torino and head it northeast along California Highway 14. Our destination? You guessed that as well: Las Vegas, Nevada. This year, though, there was more than just SAROC. It seems that someone had thought that Las Vegas might be a fine place to hold the annual winter Consumer Electronics Show. Talk about spectacular. CES completely stole the thunder from SAROC. In fact, I find it a bit hard to write about SAROC this year since I spent far more time at CES.

The majority of my SAROC time was dedicated to such things as the FCC/Amateur Regional Media Conference, FCC Forum, and ARRL Forum. Very little else. This month, we will concentrate on the Media Conference, one which the FCC personnel haved termed a resounding success.

John B. Johnston K3BE, Chief of the Amateur and Citizens Division (now titled the Personal Communications Division) of the FCC seemed delighted at the number of people turning out for this first "regional version" of the FCC/Amateur Media Meetings. While I was too engrossed in the meeting proper to give you a head count, it's my opinion that the decision to take these meetings to the people rather than vice versa was the right one, and the FCC people are to be complimented on this approach.

John acted as host and moderator for this gathering, beginning things with an updated version of his FCC slide show that included one slide depicting the many stacks of mail received from people like you and me. John assured us that it all does get read, though most never receives a direct answer. To do so would be an impossible task, so the Commission tries to cover pertinent topics through periodic bulletins. Trying to answer each and every question on a one-for-one basis would make for an insurmountable paperwork load. We in the media were also asked to remind you all that at present, and until further notice, *the suspension of fees still is in effect.* Therefore, *do not send the FCC any monies with applications.* If you do, you will receive your license with the words: "If You Paid By Check, It Was Destroyed." This was the simplest way that the Commission could find to handle this problem. Simple and effective, but it does tend to make a license look a bit messy.

Here are some interesting statistics for you, as provided us by John. Question: Each month, how many (average) people pass amateur exams at FCC offices? Answer: Technician—232, General—150, Advanced—57, Extra—8. These are people who walk in "cold"! People with the knowledge to pass the test, but no prior license! Not too shabby, I must say. Remember, this does not count the hordes of new Novices being licensed each month and those upgrading. John also brought a bit of laughter to our assembled multitude when he informed us that better than 75% of those taking the 20 wpm code exam at the FCC offices pass it, and added: "This must prove that 20 wpm is by far the easiest."

To those of us involved in the world of VHF/UHF communications, the presentations of two of the speakers hold signifi-

SCRA Past Chairman Bob Thornburg WB6JPI, speaking at the SAROC FCC/Amateur Media Meeting.

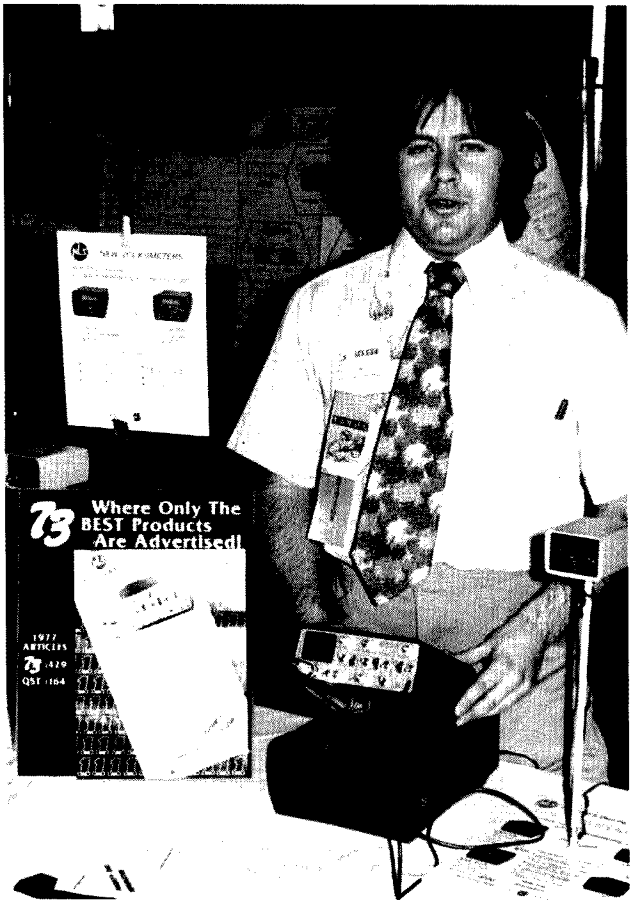

Heath Kline of Priority One Electronics shows his wares at SAROC.

cance. Overall spectrum management was covered by Will Anderson AA6DD. Will explained spectrum management in terms of space (available frequencies) versus time (utilization factor), as such applies to both HF and VHF/UHF. He stressed the need of developing new techniques to provide more relay spectrum availability without an increase in relay spectrum per se, stressing technological advancement as the key to the problem. Through use of modulation folding techniques as applied to "commercial 2.5 kHz sliver band," Will feels that a massive increase in available relay pairs could be found. He feels that use of computerized PCM techniques could enhance this even further. Why? Why the need for all this advancement now? In one word, "Communicator." Should a Communicator Class license come to pass, and with it the possibility of millions of new amateurs needing a place to operate, and most wanting the advantage of relay communication, we will be hard put to handle this kind of problem *unless* we begin to plan our destiny now.

Later in the afternoon, Bob Thornburg WB6JPI spoke on repeater/remote deregulation. Bob, former SCRA Chairman and current member of that organization's 2 meter Technical Coordination Committee, stressed the need for "livable rules" that do not restrict technical advancement. He cited the present controversy over the Report and Order on Docket 21033 and the massive resistance from within the amateur community to its implementation as an example of this. There was just too much "good" and "bad" lumped together at one time in one document, with almost no time to evaluate and plan for its implementation. It was stressed that such deregulatory factors should have been handled as individual points and individual reports rather than as a "total lump," so that the "good" would not have to remain restricted because so many are against the small amount of "bad" contained therein. Bob specifically made mention of the hold on remote base deregulation as an adverse effect of the overall staying of 21033 by saying: "Kelsey and Schlessinger made a fine written presentation to the Commission on the case for remote bases. Perhaps the best such (presentation) ever made on the topic. Unfortunately, it got lumped in with repeater deregulation, which it has very little to do with." (The Kelsey and Schlessinger referred to are Mr. William Kelsey and Mr. Gordon Schlessinger of the Southern California Repeater Remote Base Association. Last year they filed a very technologically complete request for remote base deregulation which became part of 21033's initial Report and Order.)

Bob's presentation stressed that "we amateurs" have the resources to handle any and all problems which might confront the amateur service, be it HF or VHF, that what we need are "guidelines" to work from rather than rules covering specific points and/or operational procedures, and that such guidelines must be structured in a way that will foster technological growth and at the same time bring an awareness of the "self-policing" responsibility to all amateurs. Bob and the SCRA feel that within the amateur community lies all the necessary talent to handle current and future deregulation, and that the Commission need only ask for this talent to come forth. He suggested that, in the future, the Commission "field test" any form of regulation and/or deregulation by "farming it out" to a group of experts on a specific topic and then using the feedback it receives to make any final decision prior to total implementation.

On the matter of self-policing in relation to total deregulation, Bob commented that the one rule or law we need is some way of prosecuting the "bad guy" or "turkey" and getting his license pulled. "The amateurs can find the bad guys... It's done every week here on the repeaters in LA... the problem is what do we do with them once we find them... we need a law, a rule that will enable us to get them out of the amateur service... to stop them from jamming repeaters, WESTCARS, or what have you..." Jumping in with a comment, Ney Landry of the FCC's San Francisco Field Office stated that though he thought all this was a fine idea, "Who will write the legal definition of the term 'turkey'?" Needless to say, this brought more than a chuckle from the audience.

CES WAS A BLAST DEPARTMENT

Ever wish that you could visit one place and see every new electronic gadget that your heart might ever desire to own? Bet you have. I was lucky... this year the "dream" became reality thanks to the 1978 winter Consumer Electronics Show being held in Las Vegas simultaneously with SAROC. CES is to the consumer electronics industry what Dayton is to amateur radio. While no final tally is available, on closing day (and I was there at the close of the show) unofficial figures placed attendance at over the 50,000 mark. I heard estimates up as high as 65,000! CES themselves will eventually have an official figure, but whatever it turns out to be, the one word I have to describe CES Las Vegas is "crowded."

Just a small part of the CES at the Las Vegas Convention Center.

1978 looks to be the year of the home VCR (videocassette recorder), with home video entertainment (games, etc.) equipment running a distant second and CB/CB-related items still quite visible. Now, these are my views and do not necessarily represent the views of those showing their wares. However, I have never seen more interest exhibited in home videotape equipment than was apparent at CES Las Vegas. For those not aware, there is still a bit of a "fight" going on as to which one of two ½" tape cassette formats will become the eventual market standard. These two are the VHS and the Beta formats. Each seems to have certain advantages and disadvantages, with VHS claiming twice the record/play time offered in the Beta format (4 hours for VHS vs. 2 hours for Beta) and Beta claiming superior adjacent line noise rejection and slightly better resolution in exchange for the shorter record/play time. As far as I am concerned, both systems exhibit good quality reproduction, with the Beta being my personal preference. Both systems are helical scan and both appear to be based upon the time-proven ¾" U-Matic format introduced a few years back by Sony. (I still prefer the quality obtainable from ¾" over ½", but U-Matic tape cartridges cost twice that of either VHS or Beta cassettes. It's been the advent of high quality ½" tape and associated techniques that has brought video recording to a point where most of us can afford it.)

"Advanced" home video games were also in abundance, along with mainstays such as home and mobile stereo equipment, the latest in television sets, and some CB radios (though not to the extent I thought I would see). I suspect that it's a sign of our times. Last year, CB was in the public eye—you know, the big fascination. This year it's video games and videotape... next year???

There were a number of exhibitors showing their amateur equipment lines, including both Regency and Wilson. Wilson's booth continually drew a big crowd of those interested in their newly announced pint-sized two meter hand-held, and Regency was not wanting for visitors either. The Consumer Electronics Show was, in my opinion, the best such show I have ever attended. If it continues to run in Las Vegas at the same time as SAROC, SAROC will be very hard put to compete with it. CES is a show which offers something of interest to everyone, man, woman, or child. It's a show of dreams and dreams come true, one that is well thought out and well managed on a very highly professional level. I seriously doubt if SAROC or anything else can hope to compete with it. It's that good!

Before leaving CES, I have to remark about one particular booth that was, in my eyes, the "Show Stopper." Kudos go to Kraco, the CB and auto audio manufacturer, for coming up with the idea of having a bit of a show at their booth featuring trained exotic birds provided, I understand, by the San Diego Zoo. These "fine, feathered," and colorful friends seemed to gather crowds simply by uttering their normal "bird sounds." They were beautiful to behold and probably gave Kraco an edge over the competition. I know that I enjoyed watching them.

Ecstasy In Multimeterland

—build this autoranging marvel

Charles J. Green WA4AIH
114 No. Osceola Drive
Indian Harbour Beach FL 32937

The most frequently used and trusted piece of test gear is the VOM. New ICs have changed the appearance of the VOM by taking a giant step in providing numeric readouts in the place of the sometimes difficult-to-read meter movement. Even if the greater accuracy was not considered, the ability to match voltage currents and resistors was greatly improved. However, not until recently have the IC manufacturers been able to provide the function we have all been waiting for . . . autoranging!

This article describes the operation, construction, and calibration of a complete 4-3/4-digit autoranging, autozero, autopolarity digital multimeter capable of measuring dc or ac volts (.1 millivolt to 2.9999k V), dc or ac current (1 uA to 2.9999 Amps), and Ohms (.1 Ohm to 29.999 megohms). The autoranging feature will automatically provide the proper decimal location to give the most significant digits possible. A single 5 V supply is all that is needed for operation of the meter.

Circuit Description

The block diagram (Fig. 1) shows how simple the circuitry has become with the introduction of Intersil's 8052 analog signal conditioner and General Instrument's AY-3-3550 4-3/4-digit DMM integrated circuit.

A voltage of unknown amplitude is applied to the variable gain amplifier. Ideally, the output of the amplifier will be between +2 V and -2 V. The output will be converted to dc if the ac/dc switch is in the ac mode. This unknown voltage will be applied to the input of the 8052 (IC11) only when the

Photos by Arnold Cain WB4FDQ

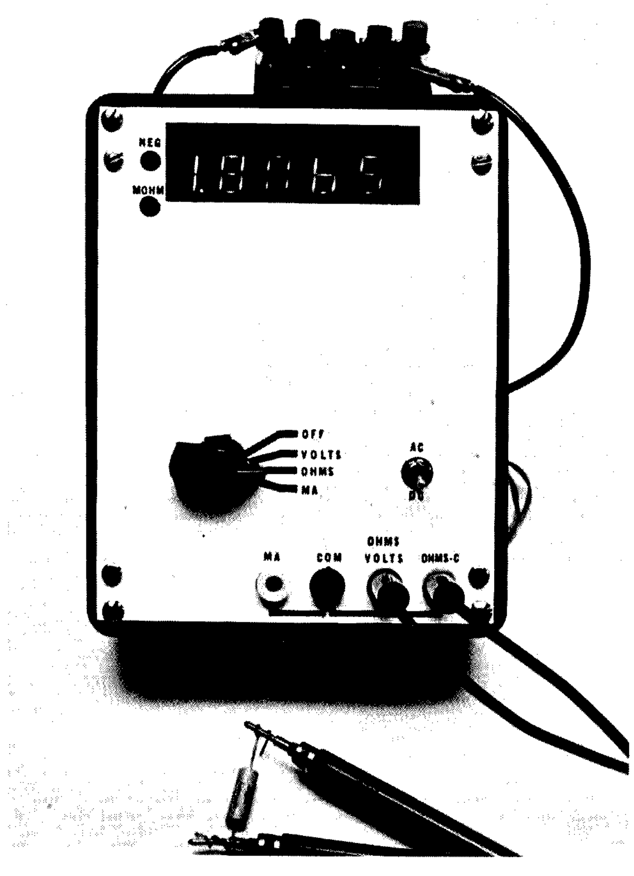

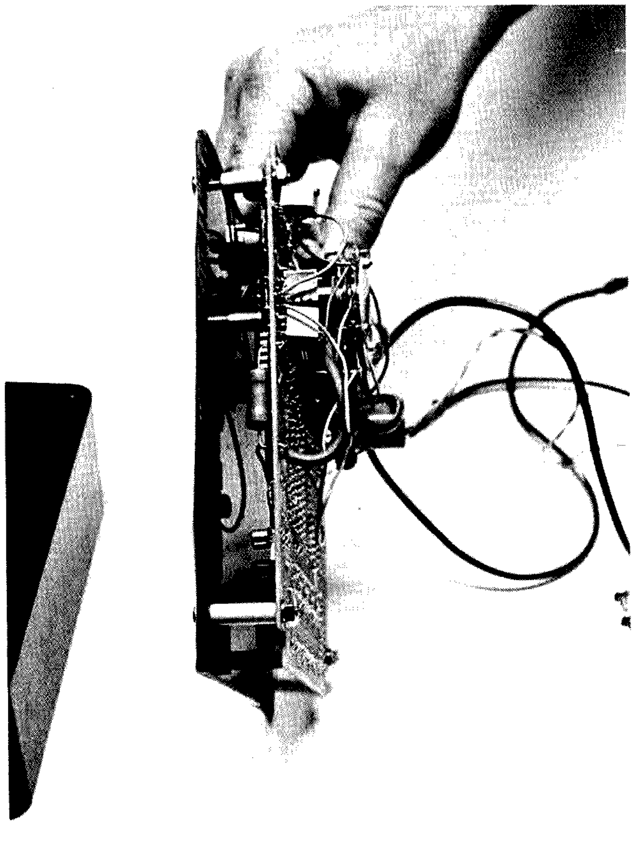

AY-3-3550 (IC3) is ready to make a measurement. When ready, the sample switch will be enabled for 10,000 counts, the sample switch is turned off, the comparator output is sensed for polarity by IC3, and the polarity data is used to force the dual slope integrator to integrate in the opposite direction. IC3 will store the count required for the integrator to cross zero. This count will be directly related to the amplitude of the unknown voltage. If the integrator does not reach 0 V by 20,000 counts, the unknown voltage is too large. In this case, the variable gain amplifier is set to reduce the unknown voltage by a factor of 10 and start the sampling over again. If the count is less than 1800, then the variable gain amplifier has insufficient gain. In this case, the gain will be increased by 10, and the sampling will repeat. Note that, as the gain is changed, the decimal point is shifted.

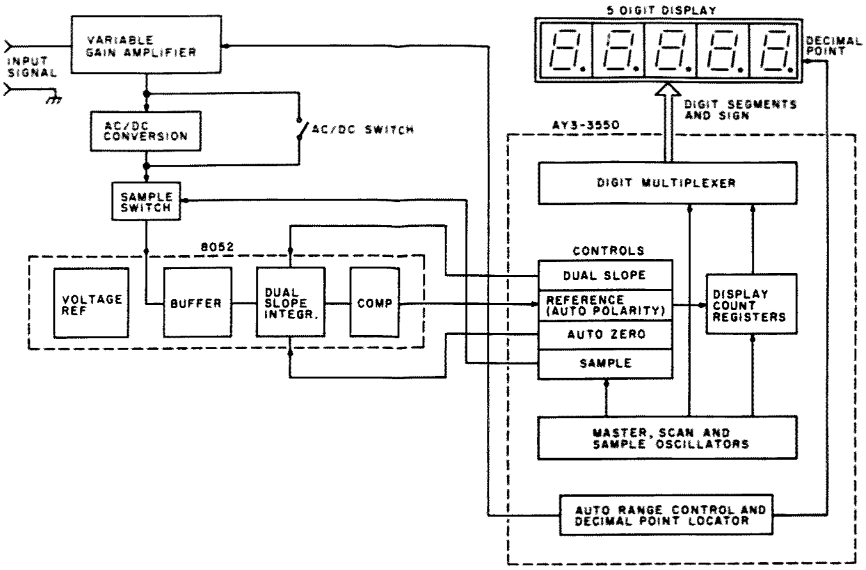

Fig. 1. Autoranging DMM block diagram.

Between voltage samples, the autozero circuit of IC3 will recalibrate specific capacitors so that the new measurement will start from zero.

The 5-digit display is controlled by the digit multiplexer internal to IC3. An LED to the immediate left of the display is on for negative measurements.

The circuitry is complicated by the requirement of an accurate positive and negative voltage reference for dual-slope integration. A "flying capacitor" technique is used to bias all input voltage to IC11 to +1 volt. This way, a ground level appears to be -1 volt, and only a

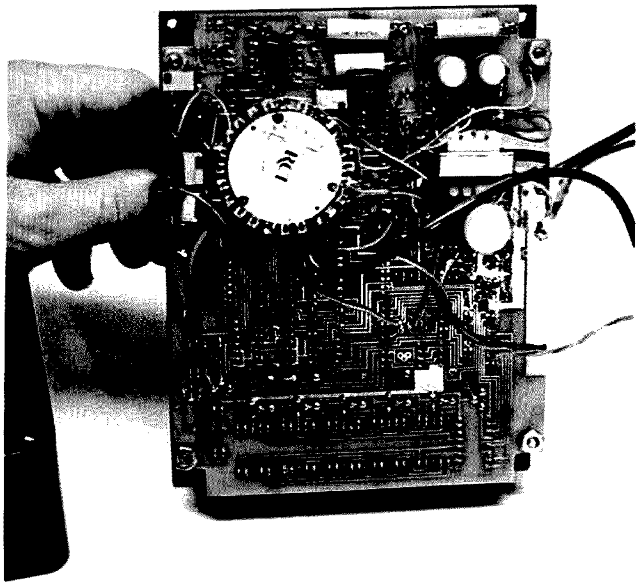

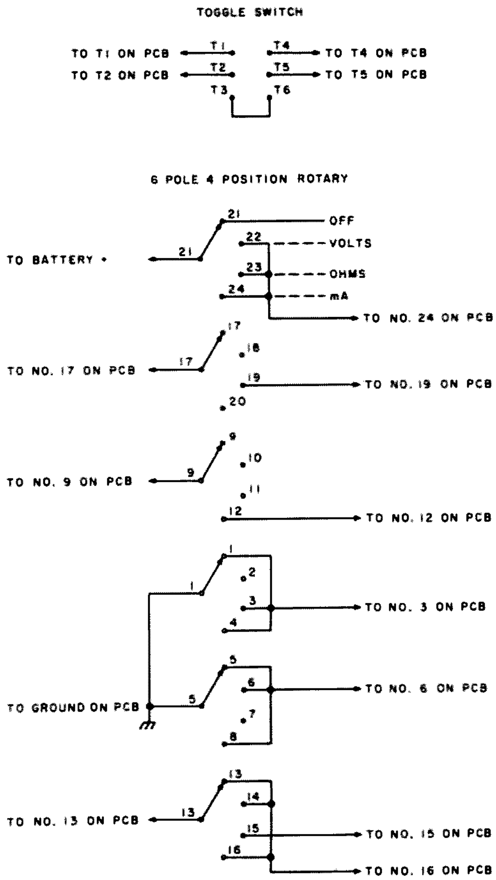

Fig. 2. Switch wiring diagram.

positive reference is required.

Another complication is that IC3 does not have the drive capability for the numeric readouts. Therefore, a 7447 decoder driver must be added for segment drivers, and discrete transistors must be used for digit drivers. Resistors are required to limit base currents, and additional resistors are required to limit segment current.

In order to control the variable gain amplifier, sample switch, and autozero circuit, analog switches must be used. The three analog switch packages are powered from a ±8.2 V supply. The control input to these switches must also be ±8.2 V. Therefore, a level converter is necessary to convert the +5 ground level of IC3 to ±8.2 V. The three LM339 ICs were added for this purpose. Leftover portions of the LM339s were used for gating functions.

IC3 has inputs which provide the capability of changing the upper and lower limits of the autorange circuitry. Since all three functions use different limits, a 4052 (IC4) multiplexer was required. IC4 senses the mode of operation and applies the desired range limits to IC3. For example, the upper range for volts is nnnn.n, and the upper range for Ohms is nn.nnn.

The ±8.2-volt supply was developed experimentally. A 555 (IC7) oscillator drives the primary of a transformer. Each side of the center-tapped secondary forms a half-wave rectifier circuit with one being positive and the other being negative. Each voltage is regulated at 8.2 volts to limit the maximum output voltage.

Since IC3 is a digital multimeter, not a digital voltmeter, use of existing circuitry to measure resistance and current is simplified. In addition to providing two inputs to IC3 for the function desired, slight modification to the variable gain amplifier is required. When reading Ohms, the unknown resistor becomes the feedback resistor for IC12, and the feedback resistors become the input resistors for IC12. Current measurement is made possible by measuring the voltage drops across a 1-Ohm resistor.

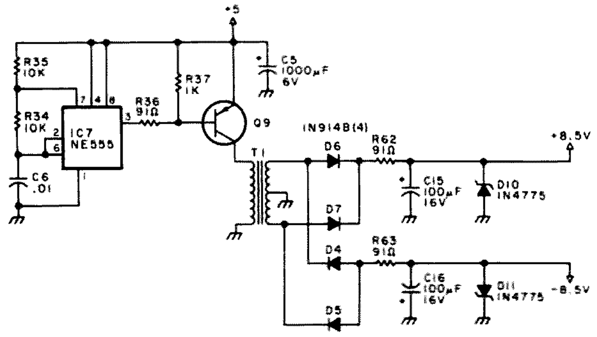

Fig. 3. ±8.2-volt supply.

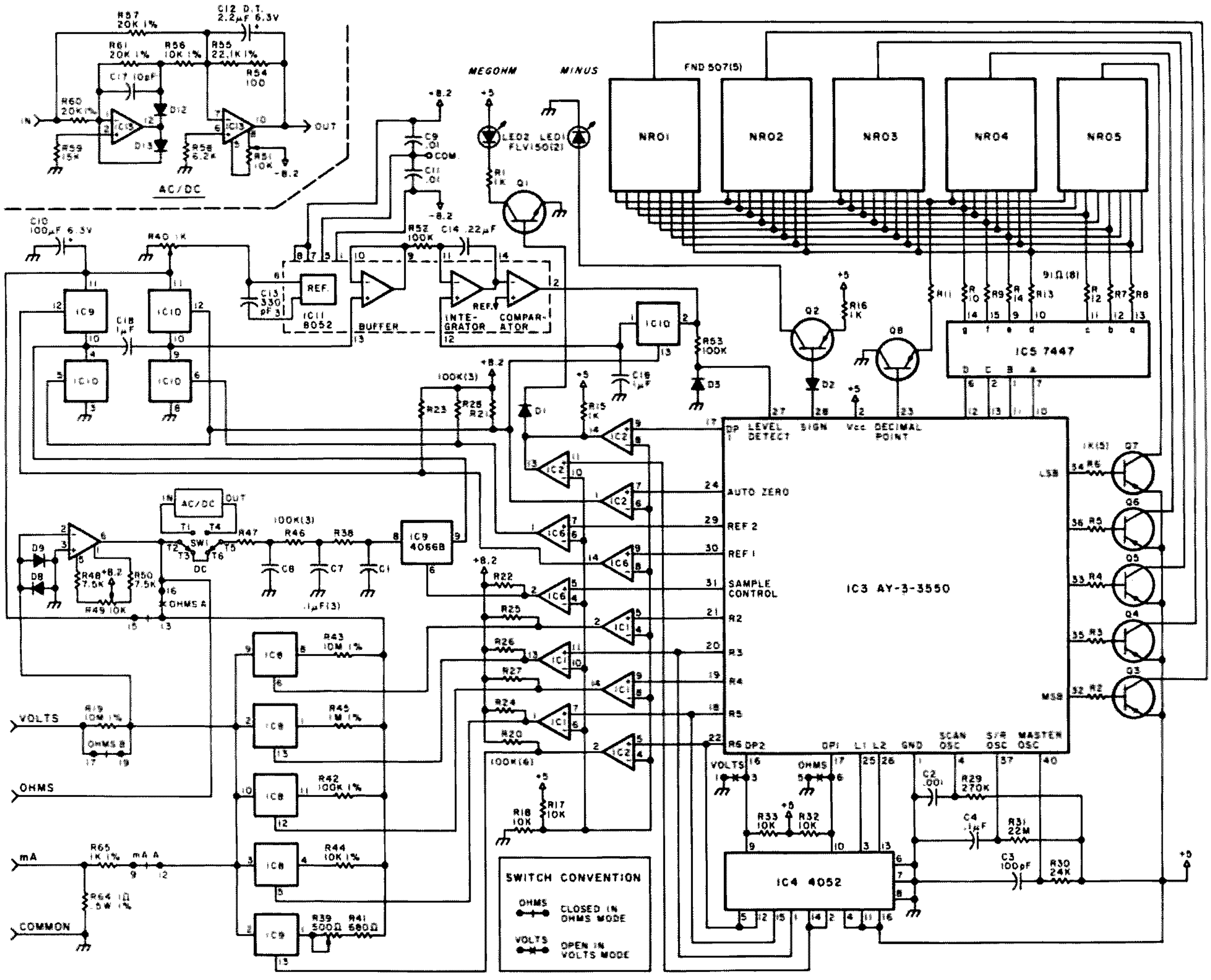

Fig. 4. Schematic.

Construction

The use of a double-sided plated-through printed circuit board simplified construction. The most important decision, prior to inserting parts as shown on the assembly drawing (Fig. 6), is to consider the mounting of the PC board. The photographs show the front panel 3/4" from the board. It was with this in mind that most capacitors were mounted on the bottom side. The transformer also presents a problem and is mounted on the bottom.

The four 18-turn pots can be mounted on the bottom. This will permit calibration without removing the front panel.

The rotary switch must be insulated from the board using nonconducting washers. Do not remove the nut on the switch; doing so can change the stop pin for the switch. Wiring from the switch to the PCB is simple, since the points on the board contain

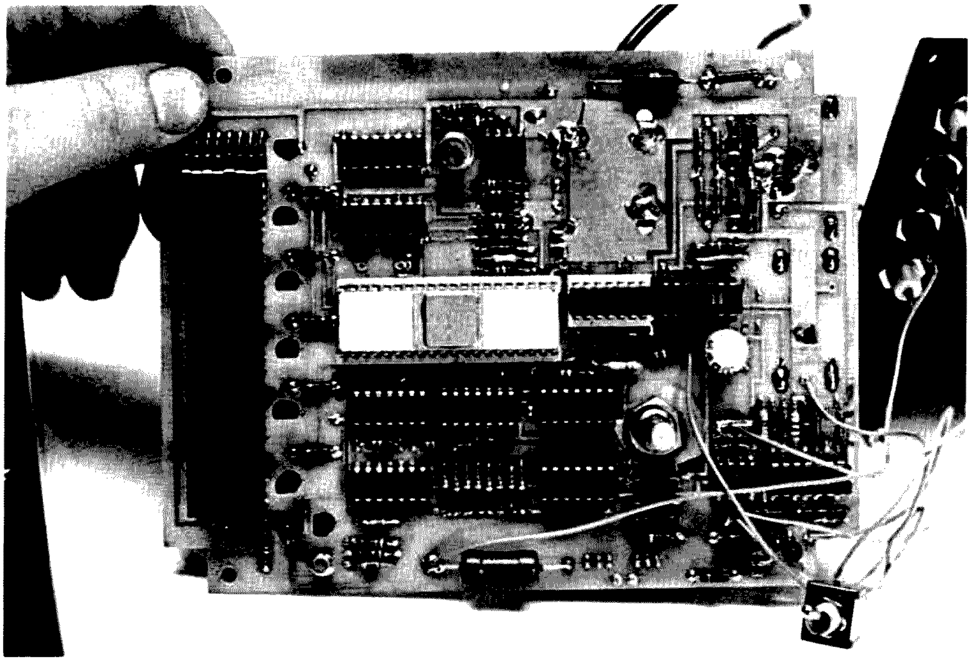

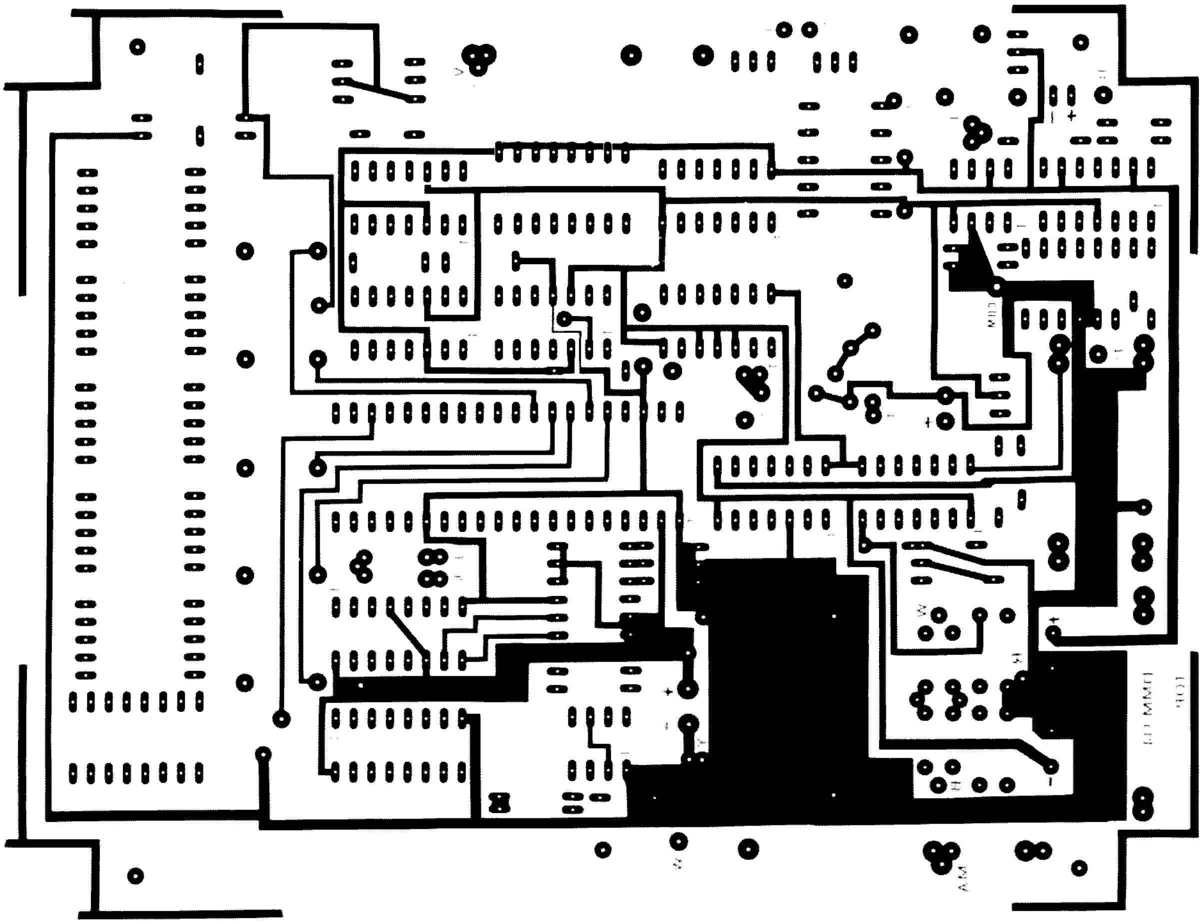

Fig. 5. PC board.

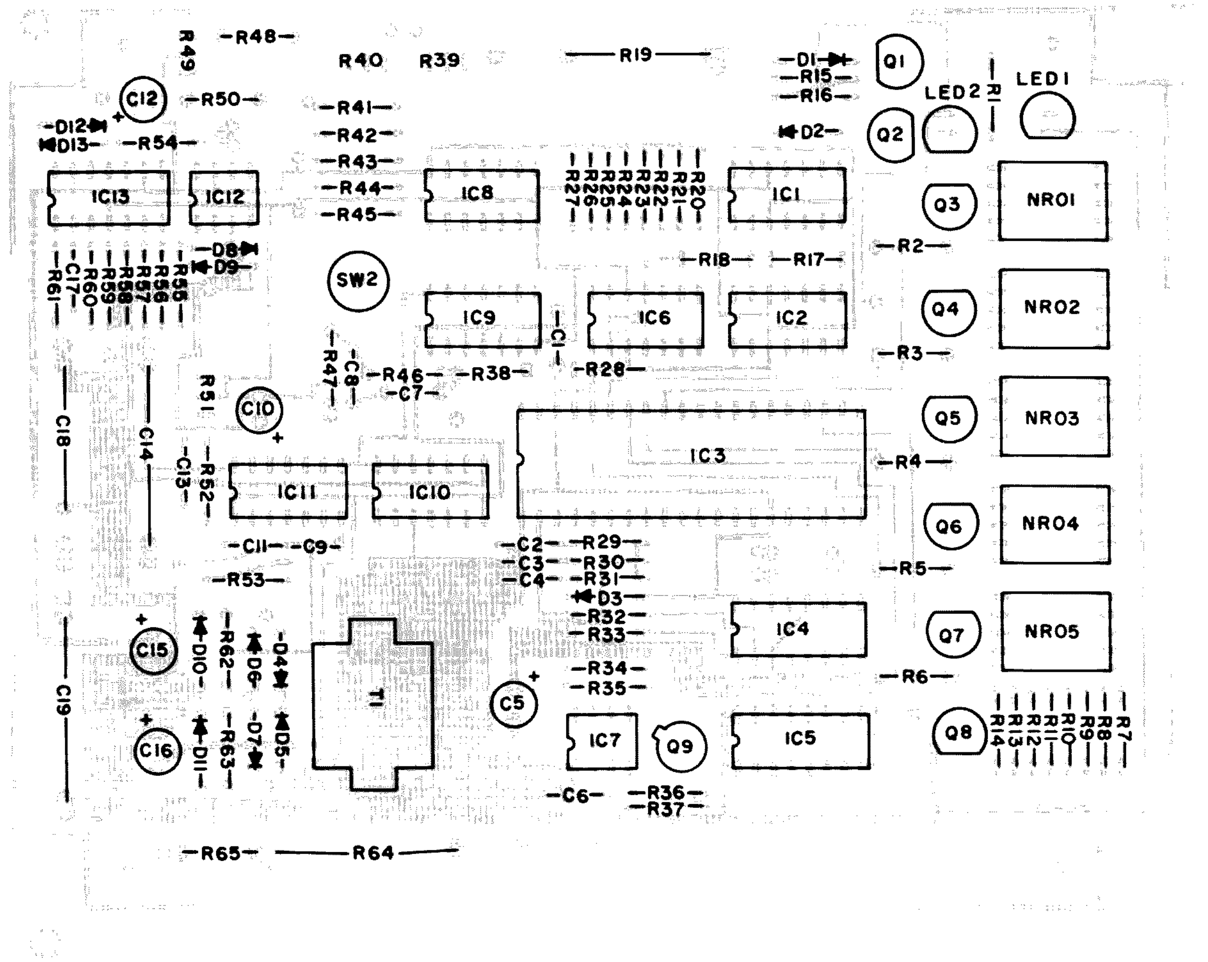

Fig. 6. Component layout.

the same number as the points on the switch. Note that the common lugs are slightly recessed. When wiring to a common lug, go to the number specified, and use the recessed lug (the one closest to the shaft). Switch lug-to-switch lug wiring should be done according to the switch wiring diagram (Fig. 2).

The ac/dc toggle switch should be wired as shown in Fig. 2. The PCB is marked for easy switch-to-PCB wiring. Be careful when installing this switch in the panel, as it is easy to put it in upside down.

Use caution when inserting the ICs. Note that pin 1 is located away from the NRO, except for IC4 and IC5.

T1 wiring is aided by PCB marking. The white, black, and yellow leads are closest to the NRO. Only the yellow and white leads are used (marked Y and W). The white, blue, and red leads are connected to the W, B, and R points marked on the PCB.

Calibration

The most critical adjustment is R40 — the 1.0000-volt reference. This is the one calibration point where it is desirable to borrow an extremely accurate voltmeter. An easy point to pick up this line is switch 2 lug 15. Simply adjust R40 until a 1.0000-volt reading is measured. With the DMM in the volts mode, short the voltage input to ground, and adjust R48 for a zero reading on the DMM display.

Connect a known-value ac voltage to the voltage input, and adjust R50 for a proper reading on the DMM display (make sure the ac/dc switch is in the ac position). Insert a 1k to 1.799k precision resistor across the Ohms input (ac/dc switch in dc position), and adjust R39 so that the DMM display gives the correct value for the resistor.

If an accurate voltmeter cannot be obtained, then calibration can be accomplished by the following procedure:

1. Short out the voltage input leads, set the meter to dc volts, and adjust R48 for a zero reading.
2. Obtain a precision resistor above 1800 Ohms (10k to 17.9k desirable), set the meter to the Ohms mode, and connect the resistor to the meter leads. Adjust R40 until the DMM gives the proper value.
3. Obtain a precision resistor below 1800 Ohms (1k to 1.79k desirable), set the meter to the Ohms mode, and connect the resistor to the meter leads. Adjust R3 until the DMM gives the proper value.
4. Set the DMM to read ac volts. Connect the voltage probe to SW2 pin 15, and adjust R50 until the DMM reads 1.0000 volts.

Operation

The actual operation of the DMM is relatively easy. To measure voltage, move the function switch to VOLTS, and insert the meter leads in COM and VOLTS. The reading you get will always be in volts. To measure current, select the mA function, and insert the meter leads in MA and COM. All measurements will be in mA. To measure

Ohms, select the Ohms function, and insert the meter leads in OHMS-C and OHMS. All measurements made without the MOHMS indicator on will be in kilohms. If the MOHMS indicator is on, the reading is in megohms. ■

Parts List

R1-R6, R15, R16, R35, R37	1k, ¼ W, 5%
R17, R18, R32-R34,	10k, ¼ W, 5%
R7-R14, R36, R62, R63	91 Ohm ¼ W, 5%
R19*	10 meg, 1%, 1 Watt, 3500 volt (TRW CGH-1 or equiv.)
R20-R28, R38, R46, 1R47, R52-R53,	100k, ¼ W, 5%
R29	270k, ¼ W, 5%
R30	24k, ¼ W, 5%
R31	22 meg, ¼ W, 5%
R39	500 Ohm pot
R40	1k pot
R41	680 Ohm, ¼ W, 5%
R42	100k, 1%, RN55C
R43	10 meg, 1%, RN55C
R44, R56	10 k, 1%, RN55C
R45	1 meg, 1%, RN55C
R48, R50	7.5k, ¼ W, 5%
R49, R51	10k pot
R54	100 Ohm, 1%, RN55C
R55	22.1k, 1%, RN55C
R57, R60, R61	20k, 1%, RN55C
R58	6.2k, ¼ W, 5%
R59	15k, ¼ W, 5%
R64	1 Ohm, 1%, 3 W
R65	1k, 1%, RN55C
C1, C7, C8, C4	.1 uF disc ceramic
C6, C9, C11	.01 uF disc ceramic
C2	.001 uF disc ceramic
C3	100 pF disc ceramic
C5	1000 uF, 6 volts
C10	100 uF, 6 volts
C12	2.2 uF, 6.3 volts solid tantalum
C13	330 pF disc ceramic
C14*	.22 uF polypropylene
C15, C16	100 uF, 16 V
C17	10 pF disc ceramic
C18, C19	1 uF mylar
IC1, 2, 6	LM339
IC3	AY-3-3550 General Instruments
IC4	CD4052
IC5	SN7447
IC7	NE555
IC8, 9, 10	CD4066B
IC11	ICL8052ACPD Intersil
IC12	LF355
IC13	747C
D1-D9, D12, D13	1N914B
D10, D11	1N756A, 8.2 V zener, 5%
LED 1 and 2	FLV150
NRO1-5	FND507
Q1	TIS 92
Q2-Q8	TIS 93
Q9	2N2905
T1*	Archer 273-1381 transformer
SW1	DPDT subminiature toggle switch
SW2	RCL 16-ECB-4J 6-pole 4-position rotary switch

Miscellaneous

Printed circuit board
Spacers, screws, banana jacks, pointer knob, case, front panel
*Substitutions not recommended.
The following items are available from: SOA Products, P.O. Box EG0256, Melbourne FL 32935:
1 double-sided plated-through hole PCB – $15.00
Kit #1: 1 PCB (see above), 1 General Instruments AY-3-3550, 1 Intersil ICL8052ACPD: total price – $44.95
Kit #2: complete kit of all components itemized above including case and front panel: total price – $99.95
All orders add $2.50 postage and handling. Florida residents add sales tax. Master Charge and BankAmericard accepted.

New Products

from page 11

QTH as well. Model TF-1000 is for fixed station use only, and it doubles as a six-digit clock.

Using the counters couldn't be simpler. The unit is merely inserted between the antenna and the rf output of the transmitter or transceiver. When an unmodulated carrier is transmitted, the counter displays the frequency of the signal.

It's important to realize that these counters, along with others which are not internally connected to the transmitter, will display an accurate reading only in the absence of modulation. When operating SSB, for example, the display changes constantly in response to voice fluctuations. On CW, of course, the frequency is displayed only when a "dit" or "dah" is being sent. Once this limitation is accepted, however, they become enjoyable operating accessories. It quickly becomes second nature to check the exact frequency by momentarily turning the transceiver function switch to TUNE after QSYing. The frequency range for either unit is 1.8-40 MHz.

In addition to its frequency counter function, the TF-1000 also includes a clock function, selectable for either 12- or 24-hour format. This brings us to a clever aspect of the operation of the TF-1000. In the absence of rf, the display is that of a normal six-digit clock. However, when rf is applied to the unit, internal circuitry automatically switches the display to show the transmitted frequency. At the end of transmission, the device returns to the clock mode. A front panel switch allows the operator to defeat the automatic operation of the unit, in which case it displays time only. Controls on the rear panel include push-button switches for setting the clock and selecting the 12- or 24-hour format. A slide switch selects the appropriate power range, either 25 or 250 Watts. The 60 Hz line voltage supplies the time base for the clock.

In contrast, the FC-12 has only a single control, an on-off switch. It is limited to 200 Watts input and displays all zeros when no rf is present.

An Instruction manual is included with each unit. It contains operating instructions, schematics, a circuit description, and directions for calibrating the units against a frequency standard. *Pride Electronics, 6241 Yarrow Drive, Carlsbad CA 92008.*

Jeff DeTray WB8BTH/1
Publications Editor

TEN METER CONVERSION OF STANDARD HORIZON CB TRANSCEIVERS

Standard Communications' Horizon 29 23-channel CB transceiver and Horizon 29A 40-channel unit are now available in ten meter amateur versions. One of the more popular developments in amateur radio recently has been the widespread conversion of CB transceivers to the ten meter band. Mobile and base station nets have been formed by various clubs on certain "channels" or frequencies within the ten meter band, with affiliated clubs in other states participating when propagation permits.

The Horizon 29, now identified as the 29-10, provides 23 channels starting at 28.965 MHz, and the Horizon 29A, now the 29A-10, offers 40 channels starting with that frequency and extending up to 29.405 MHz. No crystals are required, due to the transceivers' phase-locked-loop design. Both units have in-the-mike modulation control, a sophisticated noise blanker, a large easy-to-read

Continued on page 180

New FC-12 frequency counter from Pride Electronics.

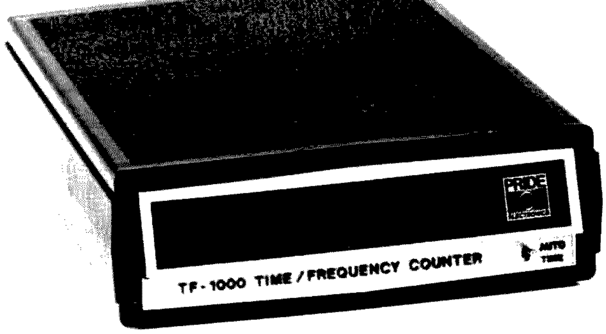

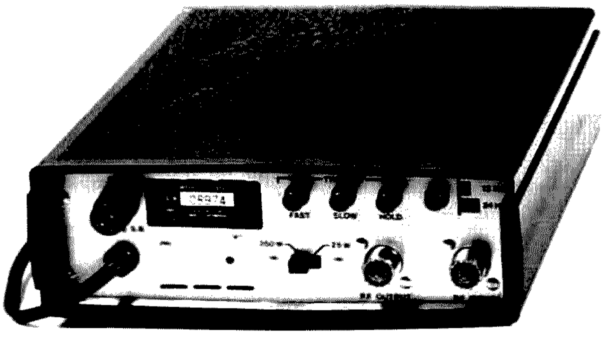

Pride's TF-1000 time/frequency counter.

Robert M. Richardson W4UCH/2
PO Box 1065
Chautauqua NY 14722

How To Succeed On 1296

—cat-food can 50-Watt amplifier

Amateur radio literature[1,2,3] abounds with many excellent articles describing tube-type 2C39/7289 1296 MHz triplers and/or amplifiers. Most of these require an inordinate amount of machine shop work not available to most amateurs. With the advent of readily-available moderate-cost varactor triplers[4] with power output after filtering in the 5-Watt range at 1296 MHz, it was believed there would be interest in a nominal 10 dB gain amplifier using a cavity that would enhance and increase ¼ meter DX activity during VHF contests.

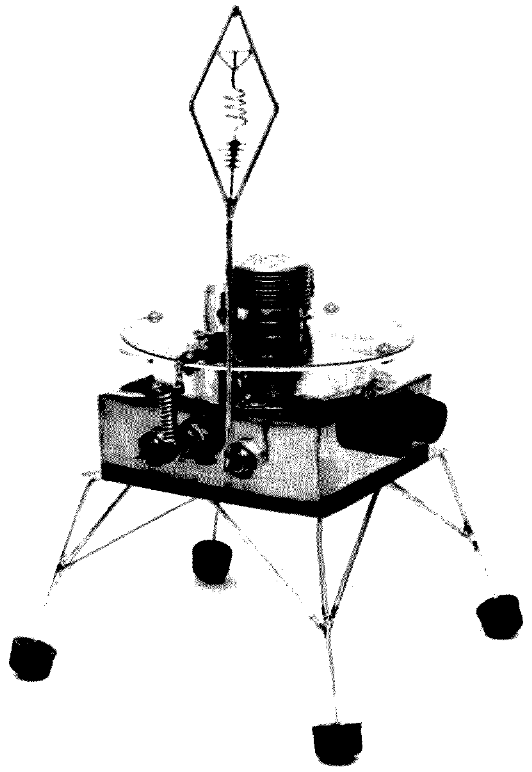

Making the following amplifier requires only a circle cutter, sheet-metal shears, and a few socket punches. A small 18-inch Lafayette sheet-metal brake to bend up the .016" brass chassis would be a help, but it isn't necessary, as it may be bent up in an ordinary small vise.

Construction

The cavity bypass capacitor, part A (Fig. 2), top of cavity, part C (Fig. 3), and chassis, part E (Fig. 4), are cut from .016" sheet brass. The vertical cavity wall, part D (Fig. 3), is cut from a Purina 6-3/4 oz. cat-food (sardines) can or, alternatively, a Friskies Buffet Dixie Dinner 6½ oz. cat-food can (note: My cat recommends the former). Parts G, H, I, and J (Fig. 5) are press-fit tube contact rings made out of .010" brass sheet. They are assembled in the following sequence:

1. Wrap part G around the 2C39/7289 anode, and secure it with 2 pieces of #18 bare hookup wire twisted tightly with pliers. Make sure the ends of part G do not quite touch each other. Slip the tube with part G wired on just barely into part A so that the bottom of parts G and A are flush. Tack solder G to A about every quarter inch on the upper surface before smoothly flowing the solder around the full circumference. Use plenty of Nokorode soldering paste and an Ungar #4033 50-Watt soldering element to make the job easy. Remove the tube from part A. It should be a good tight press-fit, but, by slowly twisting as you pull, it should be readily removable.

2. Wrap part H around the tube's grid ring, and secure it with 2 or 3 wires, as above. Insert the tube into the chassis' center hole until part H is flush with the top of the chassis. Solder.

3. Wrap part I around the tube's bottom outer cathode ring and secure it with wire. Insert into part F all but 1/16" of part I, and solder.

4. Part J is made by wrapping around a 9/16" drill and squeezing with pliers until it makes a snug press into the inner filament ring in the tube base.

5. Center part A on top of part B on top of part C and drill the 4 outer holes each 9/64" diameter. Bolt the 3 parts together with conventional 1/4" 6-32 nuts and bolts. Solder the 4 nuts to the bottom of part C. Also drill the two 9/64" diameter holes for the 2 tuning capacitors, and disassemble. Run two ordinary ¼" 6-32 nuts and bolts through the holes in part C, and solder the nuts to the top of part C. Drill 3/8" diameter holes through part A's tuning capacitor holes, and then reassemble parts A, B, and C with four ¼" 6-32 nuts and bolts each.

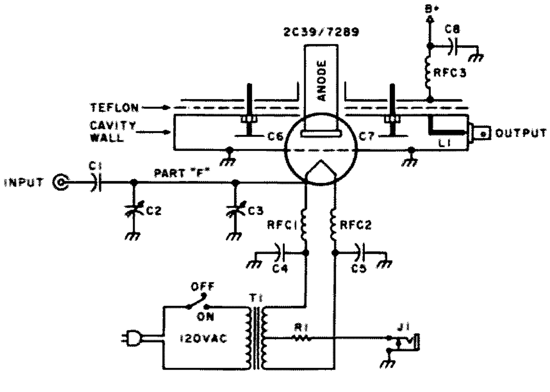

Fig. 1. Schematic.

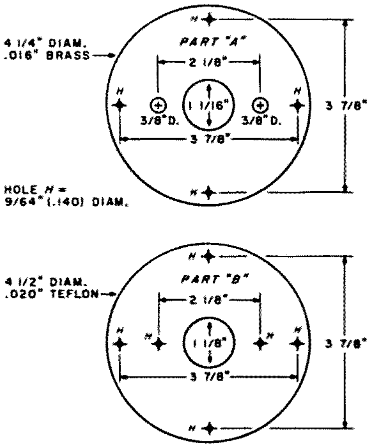

Fig. 2.

6. With scissors cut a 3/4"-wide section of the catfood can of your cat's choice. File it smooth, or, better yet, sand it smooth on a belt sander. With parts A, B, and C still bolted together, turn them upside down on a flat surface and tack solder part D to the bottom of part C before flowing the solder smoothly around the entire circumference.

7. Install and solder the output link and BNC connector as shown. Thread in the two tuning capacitors in the bottom of part C.

8. Install the tube in part G and A so that the top of part G is flush with the bottom of the protruding anode ring (tube is in as far as it will go). Carefully insert the tube into the chassis and part H until the bottom of the cavity is flush with the top of the chassis. There should be no radial or axial side loads on the tube if you have followed these steps in sequence – just a comfortable press-fit. Now, maintaining a gentle downward pressure on the tube, tack solder the cavity to the chassis before smooth flowing solder around the entire circumference.

9. Install the input BNC connector. Press-fit Parts F and I onto the cathode ring as far as they will go. The input blocking capacitor is modified by filing each side of a 500 pF ceramic disc cap until half of the leads have been filed away. Carefully tin each side with a small (25 Watt or less) soldering iron. Solder in the 2 pi-net capacitors as shown. Solder the 500 pF modified disc cap to the end part F and to the inner conductor of the BNC connector. This is a fragile part and easily broken when removing and/or installing tubes. To further mechanically stabilize part F, take two burned-out 3/4"-long glass fuses and solder them to part F on the side opposite the two pi-net capacitors. They are structurally quite strong, good insulators, and they are free.

Operating

If you are like me, unable to resist buying those one buck each 2C39 tubes at hamfests, you are most probably, also like me, throwing your money away. Of the first twelve tubes acquired this way, one was good; the others gave only marginal gain or were worthless. Jaro Electronics[5] offers factory-new 2C39s or 7289s in quantities of 5 each that cannot be beat. I prefer the 7289 tubes with the more heat resistant ceramic seals.

It is best to tune up this amplifier at a reduced plate voltage of, say, 300 volts. Use W1HDQ's favorite microwave 50-Ohm load, consisting of 100 feet of RG-58 coax. If you are an optimist, by all means terminate the coax with 10 each 1000-Ohm, 1-Watt resistors in parallel. Be assured that you will not burn them out.

Using a Bird Thruline™ wattmeter with plate power off, and a 25-Watt full-scale 1.0-1.8 GHz slug, adjust the input pi-net capacitors for zero reflected power with approximately 5 Watts input. If

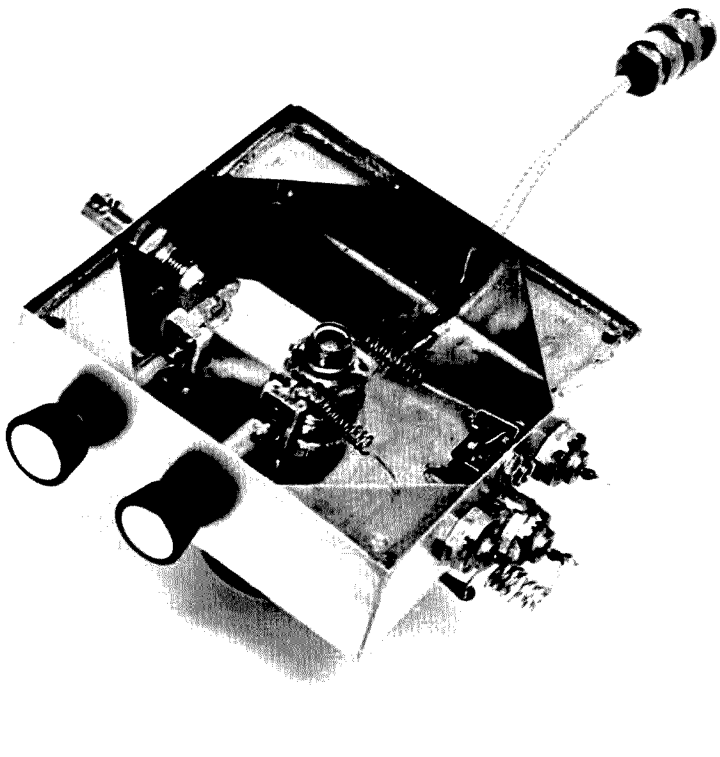

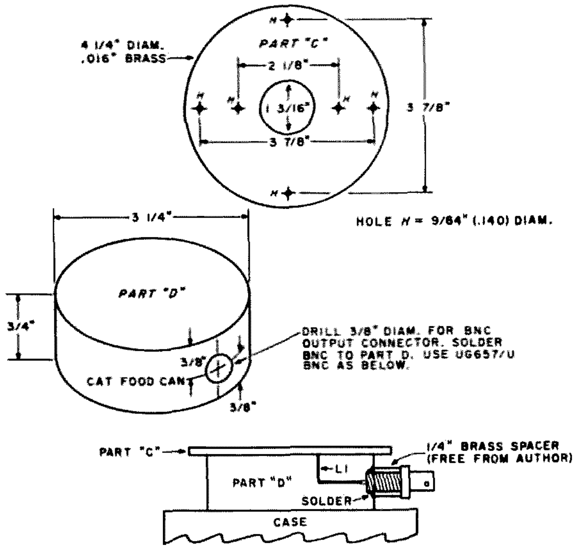

Fig. 3.

you are using a varactor tripler, you must have a good 1296 MHz filter between the tripler and amplifier input, otherwise your measurement will be totally meaningless as you will probably be measuring as much power at frequencies not on 1296 MHz as you are on 1296 MHz. With a milliammeter in series with the cathode resistors, you should obtain 30 to 50 mA of grid current with the plate supply off. Remove the milliammeter.

With the Bird Thruline™ wattmeter in the cavity's output line and your dummy load attached, you should indicate about 1-Watt output, still with no voltage on the plate, when the cavity is properly tuned. Normal position of the tuning capacitors is about 1/8" from full IN. Though the aluminum knobs make a pretty photo, it is best to remove them and use 2½" x ¼" diameter wood dowels drilled to screw on the 6-32 tuning capacitors for adjustment when the plate voltage is ON, or you will be in for a "shocking" surprise.

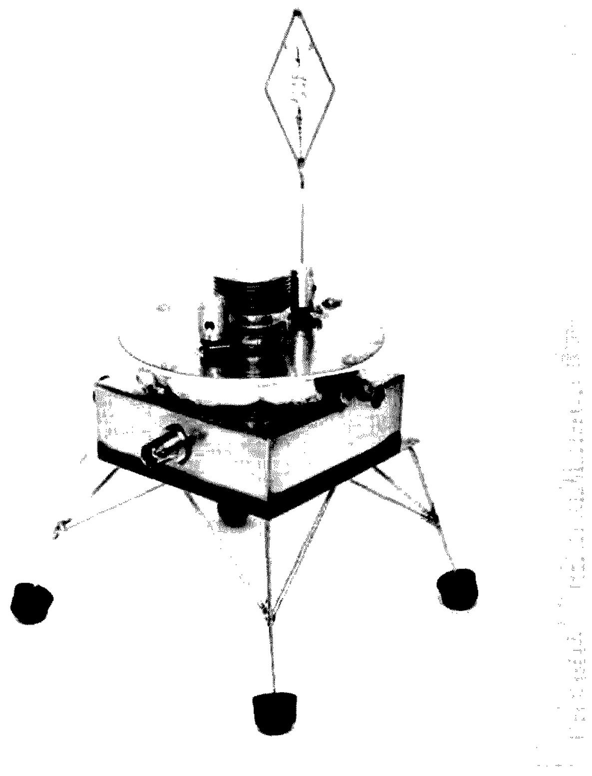

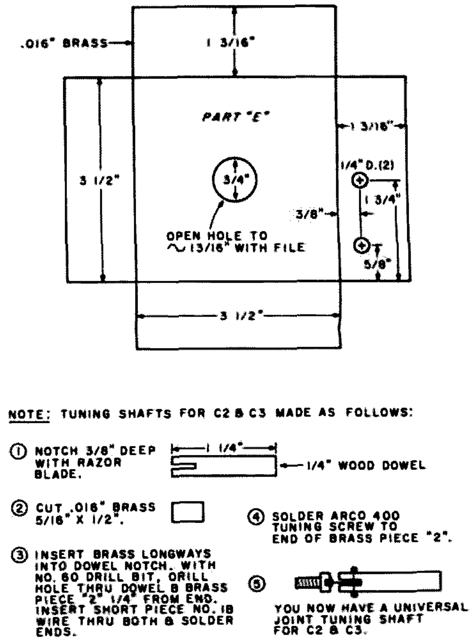

Fig. 4.

With a new tube, you should obtain results as shown in Fig. 6 at voltages indicated.

Conclusions

If you are adept with a soldering iron and sheet-metal shears, it is much easier and quicker to build a sheet-brass cavity than to hog it out of brass ingots with a milling machine and lathe. A tin-plated cat-food can cavity shows no measurable difference in output or efficiency when compared with the same tube in a similar silver-plated cavity. This is not to infer that a silver-plated cavity would be no better than one made out of kraft paper or Plexiglas™, just that the IR losses of cavity walls made out of cat-food cans is less than expected and not measurable with ordinary test equipment.

Should you wish to get on 1296 MHz and are either too lazy to roll your own or too affluent to wish to, try Spectrum International's filters, varactor triplers, receiving converters, and antennas. I have no association with this reputable firm in any form whatsoever, but I would like to see this band more populated to help preserve our precious amateur spectrum and to make available more VHF contest points, too.

Virtually every ham transmitter/amplifier article ends

Parts List

C1	500 pF (see text) or ceramic chip
C2, C3	Arco 400 (see Fig. 1)
C4, C5	500 pF feedthrough
C6, C7	see Figs. 1 and 5
C8	500 pF button bypass
L1	see Figs. 1 and 5
RFC1, RFC2	10 turns #26 1/8" diameter x 1" long
RFC3	10 turns #18 1/8" diameter x 1" long
R1	50 to 270 Ω, ½ Watt
T1	6.3 V c-t @ 1 Amp
J1	normally-closed mini jack

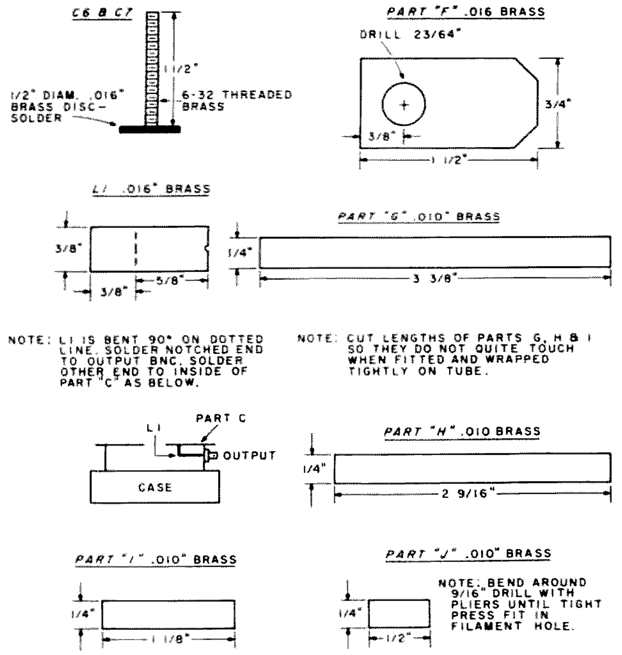

Fig. 5.

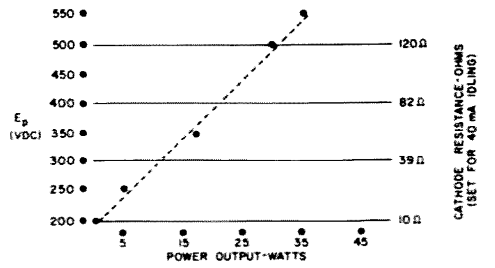

Fig. 6. Input held at 4 Watts.

with the author's[6] proud comment: "My first contact with the HBRII was with ZE2ABS in Rhodesia." He called me while I was tuning up with the much over-the-hill A, B, and C batteries connected and only a delta matched curtain rod in the basement for an antenna. I will not disappoint readers who have read this far.

While tuning up this amplifier the first time on the air, I was pleasantly surprised by K2UOP's voice saying, "I hear you, I hear you!" Actually, I should stop right now, but Boy Scout honesty will out. K2UOP is a portable 4 living just 10 miles away, and his "I hear you" voice was on the telephone. We have worked with each other the last 3 VHF contests on 1296 MHz, and, though I am trying, I still have not burned out his receiving converter's first stage. ■

References

1. Robertson, "Tripler For The 1215 Mc. Band," July, 1955, *QST*.
2. Laakman, "Cavity Amplifier For 1296 Mc.," Jan, 1968, *QST* and *ARRL Handbook*, 1968 - 1972.
3. *R.S.G.B. VHF-UHF Manual*, pp. 6.48-6.52, 1969 edition.
4. Microwave Modules Ltd. models MMV 1296 and MMV 1296H — distributed in the U.S. by Spectrum International, Inc., Box 1084, Concord MA 01742.
5. Jaro Electronics, P.O. Box 414, Orlando FL 32802, in quantities of 5 each: 2C39 — $10.00 each and 7289 — $12.00 each.
6. Richardson, "High-Power VHF Triode Amplifiers," *QST*, July, 1959; "K.W. Amplifier For 6 and 2 Meters," *QST*, June, 1963.

EDITORIAL BY WAYNE GREEN

from page 8

much in the way of amateur radio and certainly not enough to be of any serious help in emergencies. Few of these countries even have a rough idea of why amateur radio can be of any benefit to them . . . no one has ever taken the time to explain the advantages to their country of amateur radio.

Very few countries are going to voluntarily give up radio frequencies, which they feel they need, for something which is of no value to them—hams. They know that even if they get more radio channels than they need for their own immediate use, they will be able to rent these frequencies out to commercial interests . . . and the going rate is about $10 million per channel. The recent ITU maritime conference made this fact of life clear and inescapable.

Since amateur radio could be an enormous asset to any third world country, it is a shame that no coordinated effort whatever is being made to make these countries aware of what they are missing and how they could go about getting these benefits.

SALTING THE WOUND

As bad as the Boston situation was after the blizzard of '78, this would be nothing compared to what would be needed in communications should there be a nuclear war. Yes, I know this is an old harp and we aren't really worrying about that any more . . . war is not an alternative any longer . . . etc.

One of the reasons for our almost impenetrable complacency is the SALT agreement which essentially placed the populations of the major cities of the U.S. and U.S.S.R. in the role of hostages. Both sides agreed to cease efforts to protect the city populations as a deterrent to massive attack and massive counterattack.

As any of you who are involved with Civil Defense know all too well, the U.S. has not only lived up to this agreement, but has bent over backwards not to make any effort to protect city populations. We have no shelters, no food storage, no drills, etc.

Contrast this, if you will, with the Soviet Union, where virtually every factory has a built-in shelter, equipped to feed and protect the workers until the radiation from a nuclear bombing would be low enough to reap a new harvest. The Soviet cities are riddled and ringed with shelters, built deep enough to survive just about anything. They have air filters and extended-term living facilities to outwait fallout contamination.

The ugly fact is that we've been taken to the cleaners again by honoring an agreement with Russia. This is of no serious consequence as long as no international crisis arises where we feel we must rattle our nukes. As long as we are content to let Russia, with the help of satellite Cuba, take over one country in Africa after another, we have no worry. They grabbed Angola and have the top hand in a half dozen other African countries. Now they are well along with taking over Somalia, Ethiopia, Djibouti, and environs.

In personal relations, in business, and in politics, the weak and indecisive lose out . . . and how else could you characterize the U.S. in recent years?

Okay, what does all this mean to amateur radio? Unless Civil Defense is brought back to life and changes beyond imagining are made, any nuclear exchange would inconvenience about 80% of the U.S. population, with about 50% inconvenienced to the point of death. In a recent statement, the Chairman of our Joint Chiefs of Staff estimated that we would lose ten people for every Russian killed—thus we would lose about half our people in a nuclear exchange while Russia would lose about 4% of theirs . . . half what they lost during WW II.

With a situation like that, the only means of communications that would be usable would be amateur radio. Telephones would be out since they are controlled from the cities . . . and cities would be wiped out. There is no other radio communications service which covers local and long ranges . . . just amateur radio.

Continued on page 38

Ralph A. Giffone N2RG
963 E. 105th Street
Brooklyn NY 11236

Build This Digital Ball Game

—amaze your family

Note: The fielding chart in this article is adopted in part from "Strat-o-matic Baseball," manufactured by the Strat-o-matic Game Co., Inc., 82A South Baylas Ave., Port Washington NY 11050.

At one time, if you wanted to play baseball, you needed a bat and ball. Now, through the magic of digital electronics, all you need is one finger. A simple, but elegant, digital baseball game (DBG) can be built for little over $8, ICs and all.

The DBG has two parts. The first is a simulated playing field with an LED at every defensive position. The other is a single digital LED readout. Play is as follows. The batter "bats" the ball by pushing the batter's button. When he does, the 9 LEDs will go on and off in a random order. When he releases the button, only one LED will remain lit. This is the position to which the ball has been hit. The batter then goes to a *fielding chart*, where all the positions are listed, each having ten different instructions (0-9). The pitcher then pushes his button, and, as he does, the LED numbers will flash by quickly. When he releases the button, a single digit will remain on the display. The play's result can be found by locating the position and the number on the chart. After the chart's instructions have been carried out, the next batter is up, and play continues in the same manner.

Circuit Description

For the benefit of those who are new to digital electronics, I will give a simple explanation of the circuit. Fig. 2(a) shows a block diagram of the DBG. The output of clock chip IC1 is fed into the input (pin 14) of IC2. IC2 is a 7490 decade counter. Its function is to convert its input into a binary coded decimal (BCD), or, more simply, a binary number. For example, on the *first* clock pulse into IC2, IC2's output pins 11, 8, 9, and 12 will be 0001, the binary number 1. On the *second* clock pulse, IC2's output will be 0010, the binary number 2. And so on, until the tenth pulse, where the counter's output will reset to 0000. IC3 is a 7445 BCD-to-decimal decoder. Don't let the name scare you though; it's pretty simple. See Fig. 2(b). IC3 has 4 input pins, D, C, B, and A, and its input is the output of IC2. IC3 has 10 output pins, all of which are initially logic 1. IC3 "decodes" the 4-digit BCD.

Let's see what happens. Let's say that the four input pins, 12, 13, 14, and 15 (D, C, B, and A), are fed the BCD or binary number 0001. Then pin 2, which is output 1, will

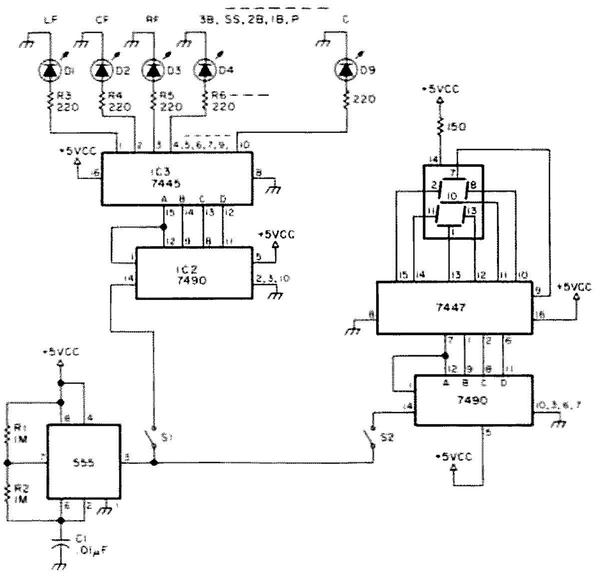

Fig. 1.

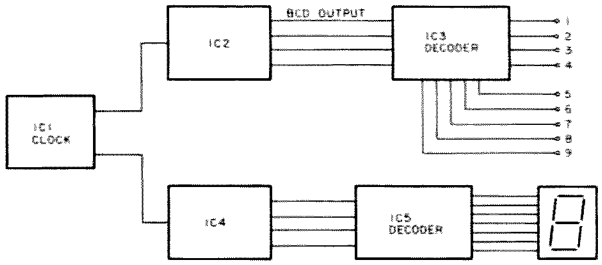

Fig. 2(a).

go low. (The rest are high, remember.) As IC3's input (IC2's output) changes to the next number, 0010, then pin 3, which is output 2, will go low (only). With a BCD input of 0011 (binary 3), the output 3 (pin 4) will go low.

Let's now look at the three ICs as one function complete. The output of IC1 is changed into a BCD by IC2. IC3 decodes this BCD into its respective output pin. Then, nine outputs of IC3 are used to drive nine LEDs. (Note that when S1 is closed, IC2's output is changing, and the LEDs will flash sequentially. When S1 is opened, though, IC2's output will remain constant, and only one LED will remain lit.)

The digit display operates in pretty much the same way. IC4 is a 7490 decade counter, too. IC4's output will be 0001 on the first clock pulse, 0010 on the second, etc. The difference is in IC5, the 7447 BCD-to-seven segment decoder. IC5 takes the BCD from IC4 and decodes it into seven outputs which will drive the seven segments of your LED readout. When the BCD 0100 (binary 4) is at its input, the LED readout will display the digit 4. With an input of 0010 (binary 2), the display will read 2. This is the same for all BCDs, 0000-1001 (0-9). (Note that, when S2 is closed, the digits will keep flashing by. When S2 is opened, though, only one digit will remain on the display.)

Building the DBG

Since there are relatively few connections to make, the DBG can be built on a perforated board. Although I didn't need the inside space, I housed the DBG in a 6¼" x 3¾" x 2" Bakelite box (Radio Shack 270-627). I used very small diameter LEDs, about 1/8". If you use larger ones, you may want to use a box with a larger surface to compensate. On the top surface of the box (metal side down), I painted a baseball field (Fig. 3). Any model paint will do; enamel is nice. I used a bright green and light brown for the grass and dirt, respectively. A bit of white is needed for the bases and baselines.

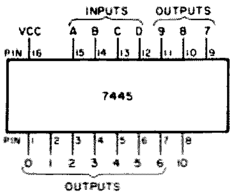

Fig. 2(b).

Drill holes for the LEDs at each defensive position, namely pitcher, catcher, first base, second base, third base, shortstop, left field, center field, and right field. Bring the LEDs up from *inside* the box. They may be glued in place.

Use Fig. 3 as a guideline for placing your push-button switches and LED digit display. Drill holes for each switch. Drill a hole beneath each pin on the LED display, and place display pins through them, so that you have access to the pins from inside the box. Wire as you would a perfboard, taking special care not to melt the Bakelite with the soldering iron.

Build the rest on perfboard. You may want to put ICs 1, 2, and 3 on one board and ICs 4 and 5 on another, for easier point-to-point wiring. To power your DBG, you will need a 5-volt source. The current drain is (on mine) 160 mils. A small 9-volt battery can be used; with the current drain, the battery voltage is brought to about five volts. It's better, though, to use a more consistent supply. Since the current draw is constant, you do not need voltage regulation. If you have an old filament transformer or what have you lying around, you can use a resistive voltage divider to get the proper current and voltage.

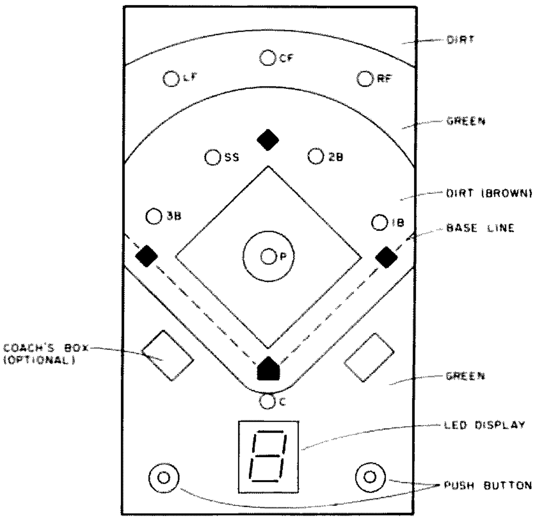

Fig. 3.

Complete the construction, and you'll be ready to play.

Digital Baseball

A brief description was given at the beginning of this article on how to operate the DBG. Table 1 simulates one inning of play, so that you fully understand how to play digital baseball. Please use the fielding chart, Table 2, to read out each given play.

Be sure to observe those little numbers after each play result (on the chart). These indicate the movement of the runners (runners hold, runners advance, etc.).

If the batting team wishes that a runner steal a base, he may call the steal *before* any play. He must then push the digit button twice to find the results of the steal attempt. For example: There's a man on first base, and he wishes to steal second base. The batter pushes the digit button, and it reads "7". We look on the chart and find that numbers 1-7 are safe, and 8-10 are out. He pushes the button again. This time the display reads "8". The runner is out going to second base. Play continues, unless that is the third out.

You should be aware that sometimes none of the LEDs

	Hit To:	Number	Results
1.	3B	8	Man on second base (2B).
2.	1B	1	Batter out, runner advances. Man on third base.
3.	CF	2	Sacrifice fly, batter out, man on 3B scores.
4.	SS	0	Man on first base.
5.	P	5	Runner is forced at 2B; 3 outs.
	•	•	•
1.	RF	0	Man on first base.
2.	C	4	Batter safe on error, men on 1B and 2B.
3.	3B	7	Double play; batter is out, player on first base is out running to second base. Player from 2B is now on 3B. (2 outs.)
4.	LF	6	Man on first base, runner on third base scores.
5.	LF	5	Man on second base, runner on first base advances *three* bases and scores.
6.	P	6	Strikeout; 3 outs.

Table 1.

Pitcher

1. Single – 1
2. Out – 7
3. Out – 7
4. Out – 1
5. Out – 4
6. Strikeout
7. Strikeout
8. 1-Base Error – 1
9. Pop out
10. Single – 1

2nd Base

1. Out – 7
2. Out – 7
3. Out – 7
4. Single – 1
5. Out – 4
6. Out – 4
7. 1-Base Error – 1
8. Out – 1
9. Line out
10. Pop out

RF

1. Home run
2. Double – 3
3. Fly out – 6
4. Fly out – 6
5. Fly out – 6
6. Fly out – 5
7. Fly out – 6
8. 2-Base Error – 2
9. Fly out – 5
10. Single – 1

Steals

1. 1 safe, 2-10 out
2. 1-2 safe, 3-10 out
3. 1-3 safe, 4-10 out
4. 1-4 safe, 5-10 out
5. 1-5 safe, 6-10 out
6. 1-6 safe, 7-10 out
7. 1-7 safe, 8-10 out
8. 1-8 safe, 9-10 out
9. 1-9 safe, 10 out
10. 1-10 out

Catcher

1. Strikeout
2. Strikeout
3. Pop out
4. Safe at first on dropped pop-up – 1
5. Foul out
6. Wild pitch followed by foul out – 1
7. Safe at first on errored dribbler – 1
8. Passed ball followed by foul out – 1
9. Foul out
10. Pop out

3rd Base

1. Line out
2. Foul out
3. Pop out
4. Out – 4
5. Out – 4
6. Out – 7
7. Out – 7
8. Double – 2
9. Single – 1
10. 1-Base Error – 1

CF

1. Double – 2
2. Fly out – 5
3. Triple – 3
4. Fly out – 6
5. Fly out – 6
6. 2-Base Error – 2
7. Fly out – 6
8. Fly out – 6
9. Fly out – 5
10. Single – 2

1st Base

1. Out – 1
2. Out – 7
3. 1-Base Error – 1
4. Single – 1
5. 2-Base Error – 2
6. Out – 1
7. Out – 1
8. Out – 2
9. Double – 2
10. Out – 4

SS

1. Pop out
2. Line out
3. 2-Base Error – 2
4. Double – 2
5. Out – 7
6. Out – 7
7. Out – 7
8. Out – 7
9. Out – 7
10. Single – 1

LF

1. Fly out – 6
2. Fly out – 5
3. Foul out
4. Home run
5. Double – 3
6. Single – 2
7. 2-Base Error – 2
8. Fly out – 5
9. Fly out – 6
10. Fly out – 6

Table 2. Fielding Chart.

on the field will be lit. (This is because the 7445 has 10 outputs, and we are only using 9 LEDs.) In this case, it is the batter's choice of any position he wishes. The pitcher then pushes his button, etc.

Runners Guide

1. Runners advance one base.
2. Runners advance two bases.
3. Runners advance three bases.
4. If no runners are forced out, batter is out and runners hold. With one or more runners forced, batter is safe on first, runner on first is out going to second. All other runners advance one base.
5. Runners hold.
6. Runner on 3rd scores (if any); other runners hold. (Batter is out.)
7. Runner on first is out going to second (providing there is one – completion of double play). Other runners advance one base.

Well, that's it, folks – digital baseball. You know, when the idea first came to me, I built it as a joke, not thinking too much of it. But I can say that I was quite surprised to find that it really is a lot of fun to play, and it's challenging, too! So get out your peanuts, Cracker Jacks, and soldering iron – and play digital baseball! ■

Parts List

IC1	NE555 timer
IC2, IC4	7490 decade counter
IC3	7445 BCD-to-decimal decoder/driver
IC5	7447 BCD-to-seven segment decoder
D1-D9	miniature LEDs
S1, S2	push-button miniature switches
LED display	Opcoa SLA 1 or equivalent anode.

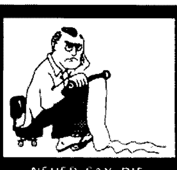

NEVER SAY DIE

...de W2NSD/1

EDITORIAL BY WAYNE GREEN

from page 35

Now, with the ITU meeting coming next year, we might not even have amateur radio ... what then? What would there be to even try and hold our country together?

Farfetched? I sure hope so. But I once ran an article which told the inside story of how Israel got started ... and radio amateurs played a key part in that. Without amateur radio, Israel might not have made it. A country without communications is not a country.

We don't have to go back very far to be reminded of how sturdy amateur radio communications are when all else fails. When that earthquake hit Alaska, the *only* communications the Air Force had with its SAC base in Alaska was via amateur radio for about two or three days!

Of course, as long as we permit Russia to do whatever it wants, sending in arms and troops to take over one country after another, we have no real worry. But Russia has made no bones about wanting to control the mideast oil, so we'd better stop arguing about alternative energy sources and get ready to run cars on something other than gas.

We could look on the bright side. If a nuclear exchange wipes out half of our people, it will make parking a lot simpler ... and land prices might go down.

For a rough estimate of the situation with Russia, I suggest you read the *Reader's Digest* articles on page 97 of the December, 1977, issue and page 77 of the February, 1978, issue. See if I am exaggerating ... even slightly.

VEGAS BOMB

The big surprise at Vegas this year was that Saroc was even duller this year than last.

Continued on page 43

Walter van B. Roberts W2CHO/K4EA
6330 Manasota Key Road
Englewood FL 33533

New Life For Your Old Dipper

It was more than fifty years ago when I first became acquainted with the useful little instrument which was then called a "grid-dip meter." It was merely a vacuum tube oscillator with a milliammeter in its grid return circuit. When a load was put on the oscillator, the grid current decreased or "dipped." The primary use for the dipper is to find the resonant frequency of a tuned circuit. (For brevity, I will use the letter X in all that follows to denote the circuit whose natural frequency is to be determined.) The dipper oscillator has a dial calibrated in frequency and a set of plug-in coils to cover a wide range of frequencies. To use the dipper, its coil is placed close to the X circuit, then the dial is slowly turned until a sudden dip is seen in the meter reading. At that point, the resonant frequency of X is read off the dial.

Other Uses for a Dipper

The simple coil and condenser tuned circuit is not the only thing whose resonant frequency can be measured by a dipper. Any resonant system to which the dipper can be coupled may be used as the X circuit: for example, a resonant length of transmission line, or a dipole, or a cavity resonator. In fact, if the dipper coil is held close to a large chunk of barium titanate, dips will be found at various high frequencies. These are due to internal standing wave patterns whose wavelengths are hundreds of times shorter than they would be in air on account of the high dielectric constant of the titanate. Incidentally, it is interesting to note that the simple original dipper circuit is exactly what was used in the proximity fuse which played so important a part in World War II. In the fuse, the oscillator radiated very high frequency waves via a tiny antenna which had a certain normal radiation resistance. Reflection of these waves back to the antenna from a target such as an airplane or earth caused a slight variation of the effective radiation resistance as the distance to the target changed. This constituted a varying load on the oscillator and hence a varying grid current. A two stage audio frequency amplifier brought these variations up to sufficient intensity to fire the explosive in the shell.

Impedance Imported By Coupling

The ordinary dipper depends for its operation on the loading caused on its oscillator by the coupling of its coil to an X circuit resonant to the oscillator frequency. Fig. 1 shows how this works. The solid arrow represents the impedance of the dipper coil when the X circuit is way off tune. The dotted arrow shows its apparent impedance when X is tuned a trifle below the oscillator frequency. As the tuning of X is varied upward through the oscillator frequency, the head of the dotted arrow moves counterclockwise around a tiny circle whose diameter is ωLk^2Q, where ωL is the dipper coil reactance, Q is the figure of merit of the X circuit, and k is the coefficient of coupling between the dipper coil and the coil in X. At exact resonance, a pure resistance ωLk^2Q is added to the normal resistance of the dipper coil and this is what loads the oscillator. Substantially the same sort of thing occurs when the oscillator frequency is varied past the natural frequency of a fixed X circuit. It will be noticed that the extra resistance that can be imported into the dipper coil varies as the square of the coupling coefficient k. Now the coefficient of coupling between two coils separated by a distance that is large compared to the coil dimensions falls off as the inverse cube of that distance, and hence the square of the coupling falls off as the inverse sixth power of the separation. Thus, doubling the spacing between the dipper coil and X would reduce the imported resistance by a factor of 64. Actually, of course, the distance between coils is usually not large compared to their dimensions, but even so, it is evident that the sensitivity of a dipper must be increased far more than in proportion to the distance over which it is expected to work.

Backwards Operation

So far we have been discussing the normal operation of the dipper. But it can also be used in what I will call the backward manner, that is, to permit tuning an X circuit to a desired frequency. In this case, the dipper oscillator is set to the desired frequency and left alone. Then the tuning of X is varied until a meter dip occurs which shows that X is now tuned to the desired frequency. When used

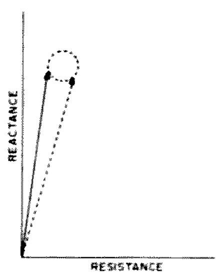

Fig. 1.

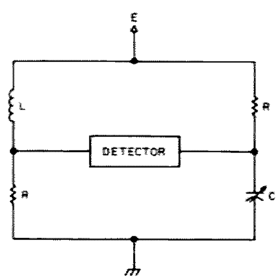

Fig. 2.

backwards, the only requirement for satisfactory operation is that the dipper be sensitive enough to give an easily noticeable dip. However, for getting a circuit tuned to a desired frequency, it is not necessary to make use of a dipper. A very simple and sensitive way to do the job is to set any oscillator to the desired frequency and listen to it with a CW receiver whose beat frequency oscillator is adjusted to produce a low frequency tone in the loudspeaker. Then place the X circuit somewhere near the oscillator, and, as X is tuned past the desired frequency, changes in the pitch of the tone will be noticed. Fig. 1 explains why this happens, for it shows that when X is tuned a little off resonance, the effective *reactance* of the oscillator coil is increased or decreased slightly. This makes the oscillator frequency change by a minute percentage. But this trifling percentage variation at radio frequency becomes a very noticeable percentage change in the pitch of the tone heard. The maximum change in effective oscillator coil reactance is given by the radius of the circle in Fig. 1, namely $\pm \frac{1}{2} \omega L k^2 Q$, and the fractional frequency change is $\frac{1}{4} k^2 Q$.

What's Wrong with Ordinary Dippers?

As has been noted, any dipper works fine backwards, but in normal operation, every commercial dipper I have used has one annoying drawback – its meter reading does not stay constant as the frequency is varied. Fluctuations of the meter reading can sometimes mask a small dip caused by resonance with an X circuit, especially one of low Q. Also, the more sensitive dippers require readjustment of an extra control as the frequency is varied to keep the meter reading on scale.

For some years now, I have from time to time tried out various ideas for getting around the drawbacks to the ordinary dipper. The ideal dipper I have had in mind is one whose meter or other indicator would show no change at all as the frequency is varied until it hits resonance with an X circuit. It should also be sensitive enough to find the resonance of a pipe dipole or other low Q system to which close coupling is not attainable. And, hardest of all to achieve, it should be easy to build and simple to operate.

If I had ever hit upon a device that satisfied all these requirements, I would probably now be busy trying to market it. However, some of the schemes I have tried meet some of the requirements, and three of these will now be described in enough detail so that any fairly competent ham should have no trouble in making them work. The circuits and constants that will be shown are what have worked for me. The knowledgeable experimenter can no doubt improve on them.

A Bridge Type Dipper

A fairly obvious idea for meeting the first requirement for an ideal dipper is to use a bridge that stays in balance at all frequencies except that at which an X circuit coupled to one of the bridge arms upsets the balance and causes a voltage to appear between the output terminals of the bridge. Thus the detector meter reads zero at all frequencies except at the resonant frequency of X when it makes a pip instead of a dip. Such an arrangement might be called a pipper, but let's keep using the word dipper for anything that indicates resonance between an oscillator and a passive resonant system.

There are various ways to make a suitable bridge, but the one I prefer is the one shown in Fig. 2. It uses only one coil, and the only adjustment needed for balancing it is the variable condenser. Once balanced it has two rather surprising properties:

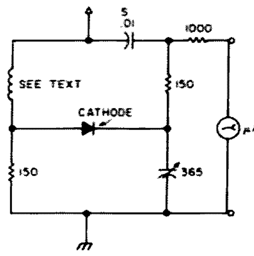

Fig. 3.

It stays in balance at all frequencies, and its input impedance is a pure resistance R at all frequencies. The condition for balance is $L/C = R^2$. Its most efficient operation is at the frequency F determined by L and C. The voltage on the detector caused by coupling to an X circuit is:

$$Ek^2Q \left\{ (f/F)/[1 + (f/F)^2] \right\}$$

where f is the actual frequency, E is the voltage impressed on the bridge input, and k and Q have the same meanings as described earlier. When f = F, the output is maximum, but as f departs from F, the output falls off rather slowly so that the same coil can be used over a wide range of frequencies, even as much as a hundred to one.

Fig. 3 shows some constants I have used for operation from less than one MHz to over 30. The inductance L is nine turns on a 1½" diameter form, with about ½" winding length. The large blocking condenser S permits removing the meter from the bridge proper so that its capacity to ground does not affect balance. The whole affair can be built into a small box with the coil sticking out front, the meter and condenser knob on top, and a coax cable coming out the rear to connect with the oscillator that supplies the input voltage E. If the oscillator is capable of supplying several volts to the bridge (the only difficult part of the whole business), then Fig. 3 as it stands makes a very nice instrument. If, however, only a small voltage can be applied to the bridge, the sensitivity

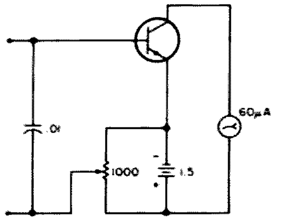

Fig. 4.

will be rather low because a certain threshold voltage must be applied to a diode before it starts detecting at all. One expedient for providing the necessary starting voltage is to unbalance the bridge a trifle, just enough to cause a few microamperes to flow in the meter. This, of course, is entirely contrary to the ideal of having no meter current at all until resonance with X occurs, but in practice it works out fairly well.

A More Sensitive Detector

Rather than unbalance the bridge, it is better to put a little dc bias on the diode as shown in Fig. 4, which may be substituted for the meter of Fig. 3. With polarities as indicated, adjustment of the potentiometer will permit setting the meter to a desired deflection, say half scale or more. This reading will stay put so long as the bridge stays in balance. The purpose of the condenser is to keep everything but dc from getting into the transistor. The addition of Fig. 4 makes it possible to obtain good pips where little or none would be seen with Fig. 3 alone.

The Link Dipper

What I am calling the link dipper differs from other dippers in that it does not depend for its action on the phenomenon described in connection with Fig. 1. The link principle is very simple: Two units are involved which will be called the transmitter and the receiver. These two units are so arranged that the receiver gets no signal directly from the transmitter. But when an X circuit is coupled to both units at once, then

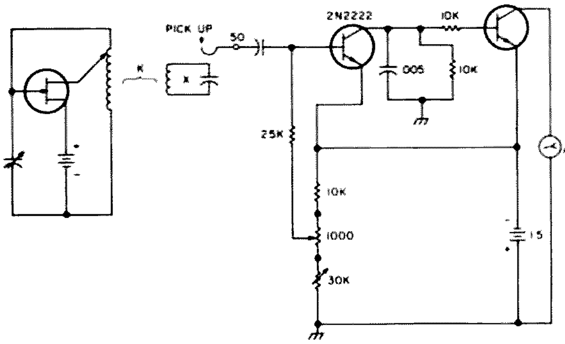

Fig. 5.

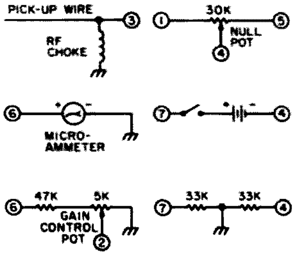

Fig. 5(a).

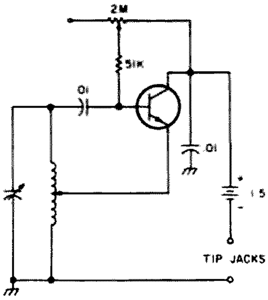

Fig. 6.

current is induced in X (when resonant) by its coupling to the transmitter, and this current in turn creates a voltage input to the receiver. In other words, X acts as a tuned link circuit between transmitter and receiver. Only when X is resonant does the receiver get anything, and that result is just what is wanted for ideal dipping.

The Hard Way To Do It

When the receiver tuning is unicontrolled with the transmitter frequency, and no direct coupling between the two units exists at any frequency, the link dipper is very sensitive and gives no indication except at the natural frequency of X. But it seems impracticably difficult to do all this. For one thing, accurately unicontrolling the tuning of two circuits is a fussy job. And a gang condenser is not satisfactory for unicontrol because its rotor element is common to the two circuits and causes a slight coupling between them. Arranging the circuits to have no mutual inductance is not hard, but electrostatic screening seems necessary to eliminate capacity coupling between circuits. And finally, matched pairs of coils must be provided for operating in different ranges. I found it most tantalizing that a dipper built along these lines worked so beautifully over a very narrow range of tuning, but to cover a wide range required frequent trimming to maintain maximum sensitivity and frequent readjustment of coil orientation to keep the direct coupling strictly zero between transmitter and receiver.

The Easy Way

It was only after trying to do it the hard way that I suddenly realized that resonance of the X circuit itself could be utilized to take the place of unicontrol tuning, and that the problem of eliminating direct coupling between transmitter and receiver could be solved by putting electrostatic screening around the transmitter so that it put out only a magnetic field, while the receiver was made to be sensitive only to an electric field. The receiver could then be energized by putting its input pickup wire into the electric field produced by current in X, and the receiver could be aperiodic so that there would be no coils to change.

Fig. 5 should explain the idea better than words can. Here the transmitter is the oscillator circuit shown at the left. It is perhaps as bad a design as could be chosen, but I have put it in deliberately to show how simple the transmitter can be. It contains only the three essentials for any oscillator: a tuned circuit, a source of power, and an amplifying device. But for satisfactory operation, you should select an N channel FET that draws only a small current, such as 3 or 4 milliamperes, from a battery of 4½ volts more or less, when the drain tap is put at the top of the coil so that oscillation does not occur. Then if the tap is moved down only a trifle, oscillation begins and the battery current decreases somewhat provided you have not moved the tap down unnecessarily far.

The detector circuit shown at the right is designed so that the meter current goes down when the pickup wire is put into an rf electric field. This assures that the meter needle will not fly off scale. The only critical thing about this circuit is the adjustment of the bias on the base of the first transistor. This is too critical to be done with a single potentiometer, so two are shown, the lower one for coarse setting and the upper one for fine adjustment of the meter current to somewhere near full scale. The meter current is quite sensitive to changes in ambient temperature. This is of no use for present purposes, but maybe you would like to use the circuit as a thermometer. The meter reading is also affected by hand capacity if there is much 60 cycle voltage floating around in the shack. This can be cured by connecting an rf choke between the pickup wire and the emitters.

A Better Detector

The detector circuit shown in Fig. 5 was devised especially for use in the link dipper, and it worked quite well when great sensitivity was not needed. But it was later found that a far more sensitive detector can be made by using a 741 operational amplifier with low battery voltage so that its non-linearity results in detection. Instead of a conventional circuit diagram, it seems simpler just to show components that I have found satisfactory, together with the pin numbers of the 741 to which they are connected. See Fig. 5(a). The battery can be as low as 4½ volts, but a little 9-volt battery is more compact. The gain control pot adjusts the sensitivity from low up to more than is ever likely to be needed. The null pot is used to keep the meter reading on scale. Reversing the connections to the meter changes the indication of resonance from an up kick to a down kick; take your choice. All in all, the op amp seems to be just what the doctor ordered for link dipping.

To operate the dipper, place the oscillator coil near X so as to get some magnetic coupling, then lay the pickup wire as close to X as possible, preferably near a high voltage point. On varying the frequency, the meter should show no change except at resonance with X. In practice, it turns out that no electrostatic screen around the oscillator is needed unless the pickup is pretty close to the oscillator, and it need not be.

The Cheapie

I doubt that a simpler or cheaper dipper could be devised than the one shown in Fig. 6. Yet it "gets you there . . ." as the old Model T Ford slogan ran. When its coil can be put reasonably close to an X circuit of good Q, it is very satisfactory, but, to bring out its full sensitivity, skillful handling is needed. Its principle of operation is akin to that of the superregenera-

tive receiver, cheap and nasty but a lot for the money. When a pair of headphones is plugged into the phone jacks, the battery circuit is completed and blocking oscillations will be heard. As the variable resistance is increased, the pitch of the tone lowers and ultimately stops. (If it won't stop with maximum resistance in, ground the left end of the pot.) The sensitivity of the device to an X circuit is greatest when the pitch is very low, and keeping it low as the frequency is varied is where the operating skill comes in. It is a two-handed job. A closely coupled X circuit will stop the blocking oscillation entirely, but a low Q or weakly coupled X will merely affect the tone somewhat. In case there is doubt whether a change in tone is really due to resonance with X, move the dipper coil toward and away from X, and if this does not affect the tone, you are not on the right frequency. The location of the coil tap for best operation over the full range of tuning will have to be found by experiment for it depends somewhat on the particular coil and transistor used. About a third of the way up the coil is suggested as a starting point. Plug-in coils are the easiest way to cover a wide range of frequencies, and, if the coil forms have four pins, you can easily make the dipper convertible to a CW oscillator by adding a tiny DPDT switch to change the base condenser and tap location to values suitable for non-blocking oscillation. In any case, the cheapie is a very handy little device to have around the shack, and it does not tie up an expensive microammeter.

Conclusions

Three radically different types of dippers have been described, each of which has some advantage over the conventional dipper. I do not feel that there is one best of the three. If someone were to hand me a transmitter tank circuit and ask me to find what frequency it was tuned to, I would undoubtedly reach for my cheapie as the easiest and quickest to get going. But for checking thousands of circuits in a factory, the bridge dipper would be the fastest and best. On the other hand, if the low Q resonances of a trap dipole are to be found, the link dipper is by all odds the best. In such a case, the oscillator coil is placed near the midpoint of the dipole and the detector pickup wire laid against the dipole tubing at a point far enough off center to pick up some electric field at the various resonances.

Appendix

In discussing the bridge of Fig. 2, perfect elements were assumed, and this assumption seems warranted for use of the bridge as described. However, to push the sensitivity of the bridge much further, especially at very high frequencies, as for example by rf amplification of its output, something must be done to compensate for the lack of perfection of its elements. For one thing, the impedance of a composition resistor drops, as I remember it, at high frequency, and also develops a capacity component, while a wire-wound resistor has some inductance. A plot of impedance versus frequency would have to be made in order to be able to develop means to give some degree of compensation. But something can be done rather easily about the inevitable resistance of a coil. In fact, something has already been done in Fig. 3 by the insertion of the condenser S. For if the coil resistance r is constant, it can be compensated at all frequencies by making S satisfy the equation $r/R = C/S$. This is called the Owen bridge.

Unfortunately, the resistance of a coil is not constant but tends to increase with frequency. However, there is a way to compensate for increasing resistance. This can be done by adding a small capacity q across the grounded resistor of the bridge. When this is done, the equation that must be satisfied in order to compensate exactly for the coil resistance is $r/R = C/S + \omega^2 Lq$. It can be seen that to satisfy this equation, r would have to behave like a constant plus a quantity that increases as the square of the frequency. An actual coil is not likely to behave just that way, but it should come closer to it than to being simply constant. A pretty close compensation should be achieved by first choosing S to give a good balance at low frequency without the aid of any q, then adding enough q to get a balance at the high frequency region.

The foregoing does not cover all the possible compensating arrangements. For instance, a high resistance across C can compensate for a constant coil resistance. To explore further possibilities of the bridge mathematically, just write the general equation for balance, which is that the product of the impedances of a pair of diagonally opposite arms must equal the product of the impedances of the other diagonally opposite arms. In the simple case of Fig. 2, this leads at once to the single equation $L/C = R^2$. But when you put complex impedances into the arms, the balance equation is one among complex quantities, so its real parts must be equal and its imaginary parts also equal. Thus, in general, there are two equations to satisfy, and the object of the game is to try to find structures for the arms that will make both these equations stay satisfied as nearly as possible at all frequencies without having to readjust anything. You are not likely to make a perfect score at this game, but at least I guarantee that it will keep you busy for several long winter evenings. ■

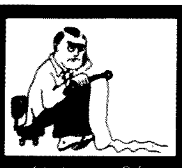

...de W2NSD/1

EDITORIAL BY WAYNE GREEN

from page 38

With virtually no program, a handful of exhibits and a rising chorus of complaints from hams who had prepaid, confirmed reservations, only to find no rooms, the main saving factor was nearby CES, the Consumer Electronics Show, at the Las Vegas Convention Center.

One of the larger ham distributors expressed a common sentiment: "Never again."

Every other year or so I try to get to Saroc just to see what is happening. As the show has gone downhill, I've found fewer and fewer old friends showing up. I skipped it entirely in 1977 and would have again in 1978 except for its coincidence with the Consumer Electronics Show.

When you compare this dud with Atlanta, Dayton, and other well-run ham conventions, it is no wonder it has withered away. For instance, there was an FCC media forum . . . and considering the legislation afoot, any normal hamfest would have a packed house for this . . . yet the best Saroc could run up was about 50 people. I think ARMA (Amateur Radio Manufacturer's Association) did as well or better. You can't get people into meetings if they don't know there are meetings, and if those who do know can't find out where the meetings are and when.

It doesn't help matters that Saroc is run during the low, low, low Vegas season . . . right after Christmas . . . and at a time when there are virtually no name acts in town. Could *you* choose between Totie Fields and Liberace? Buddy Hackett was off skiing in Aspen, etc., so you couldn't even make up for the lack of Saroc action by seeing a good show.

At a better time of year, with

Continued on page 118

Alexander MacLean WA2SUT/NN0ZVB
18 Indian Spring Trail
Denville NJ 07834

How Do You Use ICs?

—part IX

Advertisements show a number of audio preamplifier ICs that look interesting and cheap. This series would not be complete without a word about a few of the more common types.

That word is maybe. There are few applications in ham use where you would be able to use high-gain voltage preamplification.

Only a few of the available circuits are adaptable to reliable breadboard operation or easy-to-use finished circuits. The available design information is too difficult to apply and does not appear to give reliable results for experimental use.

A few common characteristics were noted, with the three I tried, that limit their use in breadboarding. Those three are the LM382, the LM381, and the LM387.

The published circuits in the data books either did not work, worked poorly, or were too critical. Even when identical values were used, some of the circuits did not appear to function. Most of the circuits were for a voltage range other than the 12 volts this series is based upon, and were too critical to work at other voltages.

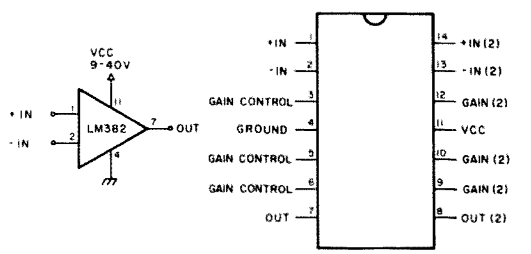

Fig. 1. LM382 dual preamplifier.

There are circuits which can be dropped right into place without fuss, but if you are going to develop your own, there are circuit characteristics to watch for as you work.

For simple tests, I used a crystal mike input, a pair of high impedance phones to hear the output, and an oscilloscope to watch the output for distortion. When measurements are given, they were made by feeding the output of an audio signal generator to the phones coupled to the mike. This made a better low-level signal than direct coupling of the generator would.

The following terms are used throughout the article:

Sensitivity — This was done with the mike and background noise. It refers to the circuit's ability to deal with a very low-level signal. A circuit might have a given gain but need a lot of drive to get the output, because the circuit loaded down the input source.

Gain — When given, this was the measured voltage gain from an input voltage versus an output voltage. The figures are approximate and do not necessarily represent the optimum possible, but just what those values produced. There will be variation between devices of the same type and variation caused by value changes or substitution.

Voltage range — Many of the manufacturer's circuits were highly voltage-sensitive. Any change in the source voltage would cut off the stage or cause other problems. The working circuits given here are of two types. The normal circuit will operate from about ten volts on up. The wide-range circuits will operate at lower voltages, approximately six volts on up.

Voltage output — Some circuits kept the output constant over the operating voltage range, and with some circuits it was possible to get higher output voltage with more drive.

All the devices were designed for a nine- to forty-volt source. Most are critical at the lower voltages. They can take a 300 mV input before overloading; however, circuit loading affects the actual magnitude of the signal at the input, and some circuits will accept a larger

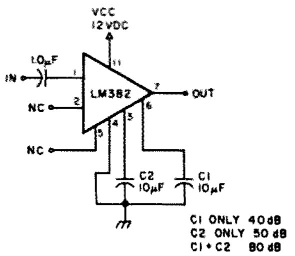

Fig. 2. LM382 flat-response amplifier. (For LM382 only — not recommended: high gain, high hum, very unstable, HF oscillation.)

actual voltage swing than others without distortion. Just how much more is a question. I blew out one IC with the output from an FM tuner. The voltage was too much. Monitor the actual input voltage when you work.

There are several specific types of trouble to watch for. In this case, a scope will be needed, as they may not be that noticeable to the ear.

Cutoff — Many of the given circuits simply were cut off. A strong signal would drive them into conduction, but the output was a square wave and useless for audio purposes.

Positive peak clipping — With some of the voltage-sensitive circuits, as the source voltage was dropped, the positive scope peak would clip. This was normally quite severe.

Negative peak clipping — This happened with some of the wide-voltage-range circuits. When overdriven, the extreme tip of the negative peak would cut off. This was slight, but it could be seen on the scope.

Overdrive — This was most noticeable on the high-gain, high-sensitivity circuits. Here both peaks would clip and, in its extreme form, you would almost get a square wave output.

The cure for the last three is obvious. Cut down on the input to the device. Whether you have the problem or not depends on the actual input and circuit you have.

Instability — This takes several forms. It is mainly an effect of high gain coupled with breadboard wiring. The basic form is oscillation.

This can be a square wave at almost any frequency. It commonly is an audio frequency, but some higher-than-audio-frequency oscillations were observed. Sometimes it comes as a few pulses at a time. You can really have fun watching the scope traces of some of these waveforms.

Hand effect — The higher the gain, the more it will act up if you touch parts of it. This does not mean that the circuit can't be used, but you will have to keep hands off while testing.

Hum — This is the enemy of high-gain circuits. They will pick up any hum in the area from other test gear or what have you.

Another effect is the equivalent of open grid hum. The leads to the input circuit will pick up hum, and even the matrix board will generate hum.

This is a problem with any high-gain stage. When you breadboard, you just compound the problem. These problems did not yield to bypassing or even more careful leads. For noncritical layout, they are here to stay.

The ICs tested were all dual (stereo) devices with differential inputs, which are ignored for audio use. The LM381 and LM387 are almost identical electronically. The LM382 is slightly more special purpose.

In the diagrams, only one section will be shown; the other you can get from the pin-out diagram. The values given will be of two types.

Some of the circuits are the manufacturer's recommended circuits and did not seem to work with the test setup. The other values were arrived at by cut and try.

The circuits recommended in this article were tested under varying conditions. They work over a reasonable voltage range, can tolerate value substitutions, and are stable for breadboard use. They may not represent the ultimate, but the circuits should work for you.

The LM382 (Fig. 1) is the most consumer-oriented of the ICs. It was made with inboard resistors to make it easy to get NAB and RIAA frequency response for tape and phono use, its main purpose in life.

For our purpose, it is virtually useless. The circuit in Fig. 2[1] is the basic flat response hookup. Make a note of capacitors C1 and C2. This IC has an unusual number of pins labeled gain.

Bypassing the appropriate pin sets the gain, which sounds nice, but it doesn't help. The test circuit, Fig. 3, used just one capacitor, C2. It's a high-gain, sensitive circuit, but it doesn't work. It had a very high hum level of almost 2 volts peak-to-peak. Using just C1 gave more gain plus more hum.

Using both capacitors was a liberal education in high hum and circuit instability. I got all sorts of square waves and oscillations.

I tried bypass capacitors here, there, and everywhere to no effect. I could not tame the circuit enough to make it usable.

On paper, the LM381 (Fig. 4)[1] is not as easy to hook up as the LM382. It takes more external parts. However, it is a far more practical IC for breadboard or experimental use and has a number of stable options.

The application notes[2] give a number of none-too-clear factors which go into the working formula, but it is not something you want to figure on a hot day.

Fig. 5[1] is the basic circuit, intended for a mixer. The values in (a) and (b) were those given by two different data books.[1,2]

The best of these values, (b), had a gain of about 22 dB, but it was so insensitive and had so little actual output voltage that it was useless. It appeared that the input resistance dragged down the high impedence input to almost nothing. It took a real punch to get a signal through.

It also had another problem. The circuits were designed for 24 volts and cut off at fifteen, useless for our purposes anyway.

Figs. 6(a), (b), and (c) give better working values for a practical circuit. Fig. 6(a) gave about 36 dB and better output, but it was still skimpy and still a load on the input.

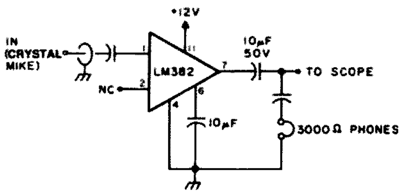

Fig. 3. LM382 test circuit.

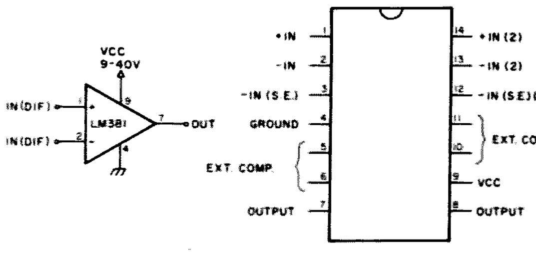

Fig. 4. LM381 dual preamplifier.

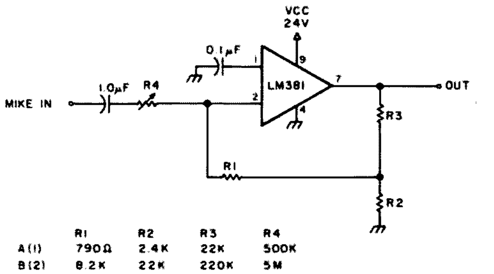

Fig. 5. LM381 mixer (flat gain, poor operation).

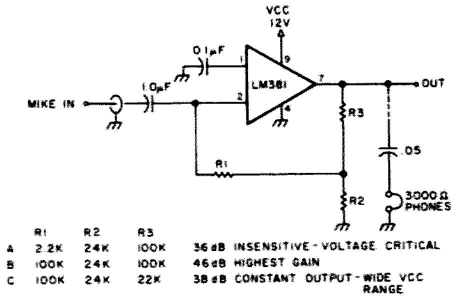

Fig. 6. Practical LM381 circuit values. [6(b) – top choice: sensitive, high gain, moderate hum, excellent overload tolerance, works down to 10 V source; for LM381, LM387. 6(c) – highly recommended: good gain, low hum, excellent overload tolerance, constant output voltage, low voltage operation; for LM381, LM387.]

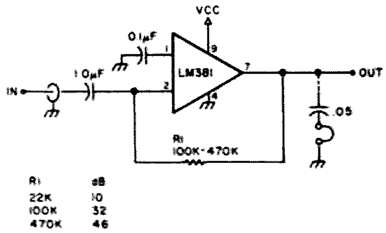

Fig. 7. Wide-voltage-range circuit. (Highly recommended: simplest, good gain, moderate hum, good overload tolerance, wide voltage range, easily adjustable gain; for LM381, LM387.)

However, it was usable, and the voltage range widened.

The best variation was 6(b). This is nothing like what the values should be, but it works. It gave about 46 dB. With the mike, I could get about 6 volts p-p.

In many respects, this is the top circuit choice. It has high gain, moderate hum, excellent overload characteristics, and excellent high-voltage operation.

Its one drawback is a slight low-voltage sensitivity. It cuts off at around ten volts. For fixed equipment circuits, this would be a very good choice.

I should explain about overload and high-voltage operation. This circuit can take a lot of drive without distortion, which was rare with the more sensitive circuits. Also, when you increase the source voltage, you increase the amount of output voltage swing when you increase the drive. You are supposed to get about two volts less output than the source voltage. This is one of the few circuits to actually do that, but it will take some drive. I had to really shout and whistle into the mike to do it, but the capability is there, and the circuit does not overload on peaks as easily as the others. This might be important in some applications. You will still have to be sure that you don't dump a really high voltage into the input and fry it, but this is the most rugged circuit of them all.

Varying R1 had an effect on the gain and the sensitivity – mostly the gain. Decreasing R1 also lowered the output voltage.

Lowering the value of R3 to 22k, as in 6(c), overcame the worst bad effect of 6(b). It widened the operating voltage range, but also cut down on the output voltage and gain (to about 38 dB).

The output voltage will remain constant with change in the source voltage. The circuit is usable down to almost 5 volts, and works well at 12 and at higher source voltages within the device ratings. It still has only moderate hum and excellent overload characteristics added to the low voltage capability.

The three resistors are there to provide only one feedback path. The quickest way between the output and the input is through one resistor.

The circuit in Fig. 7 was a nice surprise. It took right off and behaved itself. While fooling with various values, a simple method to control the gain emerged.

A few tries, and the optimum range was found to be from about 100k to 470k Ohms. Lower values cut down the gain. Going from 470k to 1 meg did not increase the usable gain, but it caused peak clipping, a characteristic of a circuit which is just about to cut off.

Without a feedback resistor, that stage will be cut off. A high input signal can drive it into conduction, and you almost get a square wave output.

The feedback resistor can be a single fixed value or a variable resistance. This should be a linear taper pot, not audio taper. It is acting as a voltage divider, not a volume control. You might also want some fixed value for minimum gain and bias even with the variable.

The circuit is quite sensitive and, at its highest gain, gives about 46 dB. It has a wide voltage range and cuts off at around five volts. The output voltage is constant over the source voltage range and is about 2-3 volts p-p.

Some other typical gain figures would be about 32 dB with 100k and 10 dB with 22k. It has low hum and good overload characterastics, although you may get some peak clipping at low source voltage levels from input overloading.

Fig. 8[2] shows a two-resistor circuit. Notice that the input goes to the inverting input which had been bypassed to ground in the other circuit.

The grounded feedback resistor is also bypassed to ground. This keeps the gain up there. I used 10 uF. For really low frequency audio, you might want a few hundred uF.

The values given in the application notes didn't do the job. By formula,[2] R1 should be a maximum of 1.2k, and, from that, R2 should be about 108k. With these values, the stage was cut off and had to be driven into conduction. This circuit quickly showed that it was going to be critical.

The circuit is very sensitive. It has a tendency to overload easily, and the square wave effect is not good for audio quality. The best circuit values worked from ten volts up. The range 10-15 would be best for our use anyway.

The values have to be chosen at the actual operating voltage to avoid cutoff. This may not be the circuit optimum, but it will be at that specific voltage. The source voltage will have to be kept close to the chosen value, or the stage will act up.

One bad problem with this circuit is the gain. With the high sensitivity and gain come increased hum pickup and oscillation.

The leads are critical and the open grid effect is noticeable. Feedback is a problem. This circuit is critical as to leads and proximity effect when your hand is there.

I was not able to measure the actual gain. The test leads threw the circuit into fits. Working with the background noise and comparing it with the other circuits, this one probably had the highest gain and sensitivity. The question is, how much do you get to use it before the circuit acts up? This is where you may have to cut and try.

R1 is needed to prevent oscillation. The best range seemed to be 2200-4400 Ohms. If there was less, the stage would cut off; more, it

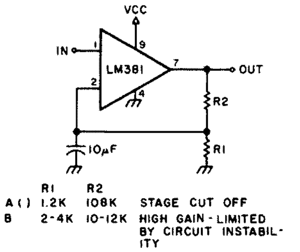

Fig. 8. Very-high-gain circuit. (High gain, high hum, voltage sensitive; for LM381. Not recommended for LM387: too unstable.)

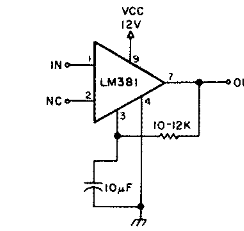

Fig. 9. High-gain circuit. (Recommended: highest stable gain, higher hum, may clip negative peaks with overload, wide voltage range; for LM381 only.)

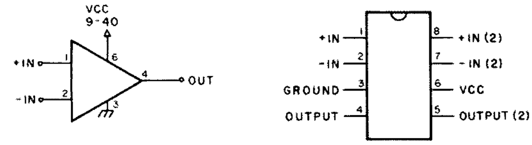

Fig. 10. LM387 dual preamp (8-pin mini-DIP).

would oscillate.

R2 is the main feedback resistor. The best value appears to be around 10-12k Ohms. If there's less, you decrease the gain; more, you oscillate. These values are not exact, only guidelines to try.

The headache is that the circuit could give you more gain, but the breadboard layout is giving you too many troubles to be able to use it.

The circuit is input-sensitive and easily overloaded by a higher input, clipping the peaks. However, when you increase the source voltage, you increase the allowable input, which will give you higher output voltage.

There is one interesting pin on the LM381 which has no equivalent on the other ICs — pin three, labeled -IN(S.E.). The S.E. probably refers to single-ended. None of the sources given made much mention of this pin.

On the schematic, it is shown as the common emitter resistor for the two input transistors. It is not bypassed. Bypassing it led to instability and oscillation with no noticeable good effect.

The unbypassed resistor is probably an advantage. It would tend to improve the stability of the stage much like an unbypassed cathode resistor.

There was a hint that it could be used as the feedback point. The feedback resistor goes to pin three, and pin two is grounded, bypassed, or ignored.

This is quite stable but not high gain. You might be able to use it, though. Now, if you add a bypass capacitor, about 10 uF as in Fig. 9, you will get all sorts of gain.

At 12 volts source, the top resistance will be about 50k Ohms. Less decreases the gain, and more becomes unstable.

This appears to be the highest stable gain configuration using breadboard techniques. Other circuits may be able to give higher gain, but not without critical leads and layout. However, at that high gain, there is noticeable hum. There is noticeable hand effect, too. When you get close to some of the leads, it will oscillate, but it seems to be effective as a circuit.

That much gain can be a problem all by itself. I had no trouble hearing every background noise in the room. If I tried to talk directly into the mike, it would overload. It will pick up a whisper and amplify it, but there is too much gain for any close use. This circuit is slightly voltage-sensitive. It will work over the wide voltage range until it cuts off at around five volts, but it loses its ability to tolerate high input as you lower the voltage. This means more chance of overload.

There is one other preamp which should be mentioned, although it is not as common as the others. This is the LM387 dual preamplifier shown in Fig. 10.[1]

This is a mini-DIP IC, only eight pins, for which you pay slightly more (costs $2 and is available from James Electronics).

Think of it as a simpler version of the LM381. Fewer pins make it that much easier to work with. The given circuits were identical to the LM381, only the pin numbers were changed. They worked just as poorly, too.

The practical circuits and values given for breadboard use with the LM381 can be used as is with the LM387. Just change the pin connections for the different package. Some typical circuits are shown in Fig. 11. Use the values in the other schematics.

There are two exceptions. There is no pin for the common emitter resistor like there was in the LM381. You will not be able to duplicate that very-high-gain, single-resistor circuit.

The circuit in Fig. 8 is not recommended for the LM387. For some reason, when the LM387 is used, the circuit becomes far too unstable for reliable breadboard work.

Most of the other circuits gave very similar results and are a more realistic choice of working gain, anyway.

Having to cut back on the input level to avoid distortion has been a characteristic of a number of the high-gain and wide-voltage-range circuits. While there are a number of options for varying the gain of the circuit, this is not the input to the circuit, just the gain. Adjusting the gain will have little or no effect on that type of distortion.

Some of the data book circuits showed a volume control in series with the signal. Typical values were 500k to 5 meg Ohms. I didn't test volume control circuits, as I was interested in the full gain capabilities and simple circuits. However, for most uses, you may need to have some control.

My feeling is that the series control will never fully cut off the signal. There may be some feedthrough. I would try a control as in Fig. 12. This is more like the usual control circuit and should cut the input off completely. The value range would be about the same. Keep it a high resistance to avoid loading down the input signal.

Even a single fixed value can be used across the input

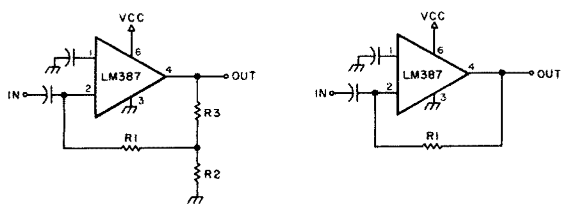

Fig. 11. Typical LM387 circuits (values same as LM381).

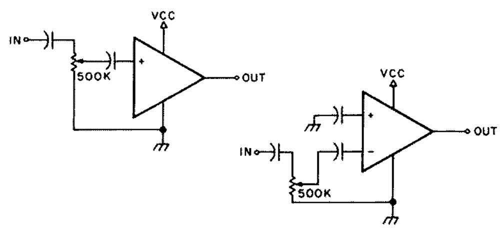

Fig. 12. Alternate volume control circuits.

to tame it a bit. For most purposes, the series control would give you the needed control. Usually all that is needed is to cut down the signal some to get away from the overload problem.

It is now time to put all this into some sort of perspective. For pragmatic use, there are several factors which might indicate one circuit over another.

First, let's get rid of that extra section. Unless you need two sections, you will be left with a high-gain stage floating around on its own. This might pick up something and send it off as an amplified signal which could get into other circuits. Just short the two differential inputs together. That should do it.

There is one basic choice to keep in mind. How are you going to power the circuit? If it is by ac, you will have no voltage stability problems that should make any real difference. You will have a constant or regulated voltage, unless there is trouble in the power supply section.

If you are going to use batteries, you may want to pick and choose,. An auto battery is nominally 12 volts, usually 13.5 or so, well within the design center.

Under normal conditions, its voltage will stay within a few volts of that. However, as you get near ten volts, you may start to have circuit problems.

The normal nine-volt transistor radio battery is the real stinker. It only stays at nine volts for a while, then it drops. When that transistor radio battery begins to drop, only the wide-voltage-range circuits will still function well below nine volts.

You will lose a little gain and output voltage with the wide-range circuits, but these figures should be viewed in the perspective of the next stage which would normally follow.

The LM380 power amplifiers only need about 0.5 volts rms before they are overdriven. The 2-3 volts p-p that the preamps give is more than enough for the power stage.

Also, most of the power amps cut off at nine volts anyway. The LM380CN mini-DIP one will work at nine volts but not much less.

As a general rule, use the least gain you can to do the job. There's less chance of hum or instability. The power amp is going to amplify whatever it gets.

The need for high-gain audio stages is not that common in ham gear. The output from most detectors would be enough to drive the power stage, and more preamplification would just cause distortion.

The most logical thing for a preamp would be as a mike amplifier to feed a power amplifier or as part of a transmitter circuit. However, there might be other applications where some extra gain is needed and one of these ICs will do the job.

If you are experimenting, I would recommend using a scope to see what you are getting. Much distortion that shows on the scope may not be that apparent just listening.

Use the schematics and their captions to pick a circuit which fits your requirements. Remember that there will be some variation between devices, and if you substitute values. You may not get the exact performance as shown.

What it adds up to is that there are a few reliable preamp circuits that you can use. The LM382 is a washout for experimental use, but the LM381 and LM387 appear to be reliable circuits when used within their breadboard limitations. ■

References

1. *Linear Integrated Circuits*, National, Feb., 1975, pp. 5-45 to 5-50 and 5-55 to 5-58.
2. *Linear Applications*, Volume I, National (Radio Shack), Feb., 1973, section AN-64.

You're Still Using Tubes? Yeccch!

—transistorize that museum piece

Fred Brown W6HPH/G5AWI
Box 2053
Rancho Santa Fe CA 92067

In this day and age, tubes are obsolete, let's face it. Even the lowest power receiving tube requires at least a Watt just to light the heater — enough power to operate more than 100 low-level transistors. The power consumed by tubes is all wasted in the form of heat, and the resulting temperature rise creates a number of problems, such as frequency drift and component aging. In addition, tubes nowadays are expensive and have a finite life expectancy, whereas transistors are immortal (theoretically, if not abused) and can be had for as little as 3¢ each. With the advent of the triode JFET and dual-gate MOSFET, it is now easy to replace every small-signal vacuum tube in your transceiver with only relatively minor circuit changes.

The early Swan single-banders were among the first SSB transceivers on the market, and, of course, used vacuum tubes throughout, even for low-level audio stages. In this SW-175, I did not go 100% solid state, but left tubes in the transmitter driver and final stages. It would have been possible to transistorize these stages, as well. A transistor final would have the advantages of no tuning and potentially better linearity, but the disadvantage of requiring a well-matched low-swr load. In addition, rf power transistors are still not quite as cheap as equivalent-power tubes, and, as every experimenter has found out, transistors are very unforgiving about mistakes. A wrong connection or voltage spike can wipe out an expensive power transistor in a millisecond, whereas tubes can take minutes, or even hours, of abuse without failure.

Probably the easiest way to transistorize your rig is to proceed one stage at a time, as this allows you to be sure the stage you replace is working perfectly before you go on to the next one. Any single down time will be minimized, so you will not be kept off the air while you are gradually making the transition.

Of course, we must be somewhat cognizant of the

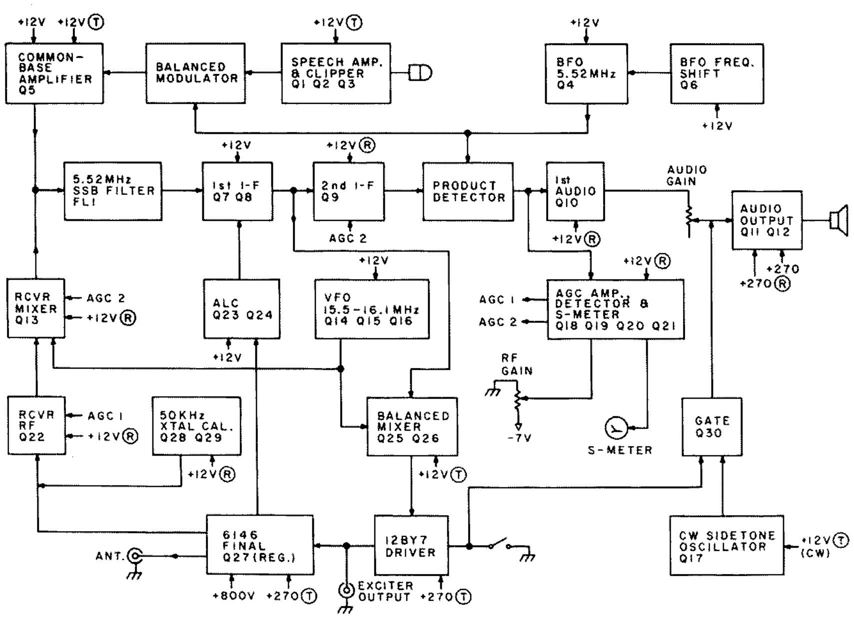

Fig. 1. Block diagram of the modified Swan. Supply voltages labeled "T" are present only on transmit. Voltages labeled "R" are present only on receive.

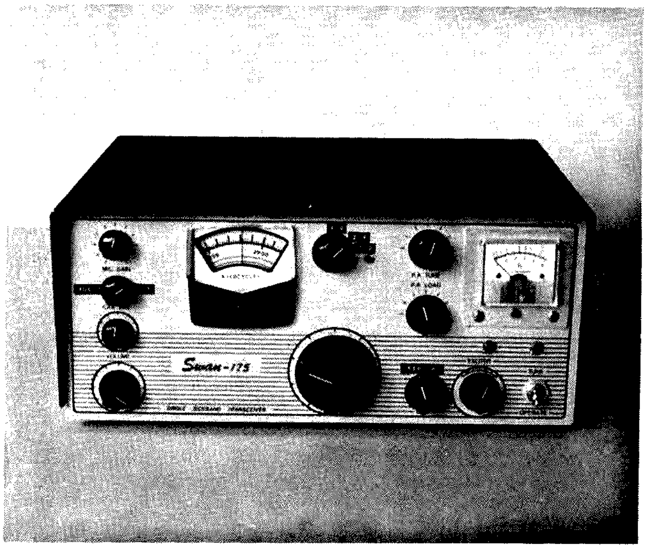

The front panel of the modified Swan retains much of its original appearance. The S-meter is mounted on an aluminum plate which covers the large hole left from removal of the original meter.

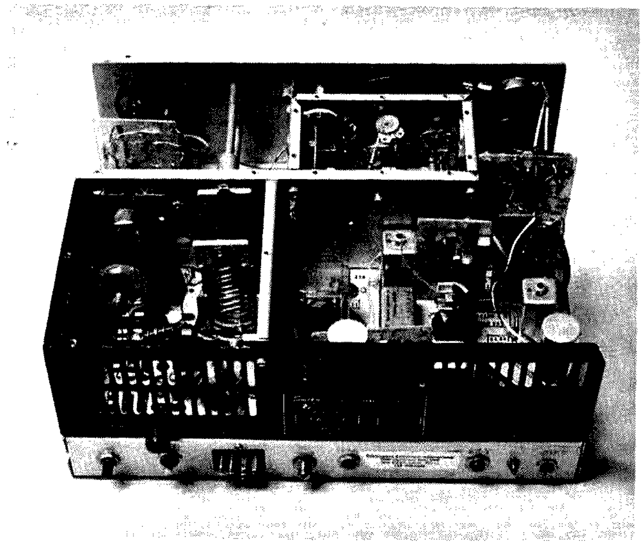

In this view, the final amplifier and vfo cover plates have been removed. The ALC circuit board can be seen between the 6146 and the S-meter. The vfo range switch, S1, is visible in the upper left corner of the vfo box. To the right of the vfo box is the agc circuit board.

different signal levels and different impedance levels of tubes versus transistors. To replace tubes with FETs will usually require only minor circuit modifications, whereas the impedance level of bipolars will demand more radical circuit redesign. But, even with bipolars, it is no big hassle. In this transceiver, both FETs and bipolars were used. 14 tubes were replaced with 31 transistors, but some of these transistors were used for new features not present in the original version.

In many cases, you can use the empty tube sockets as tie-points for your transistor circuits. I did this in the receiver rf and mixer stages, the bfo, the first i-f stage, and the audio stages. In other places, I made up small circuit boards of flat Alsinite. This is a translucent plastic-fiberglass material sold in sheet form at most building-supply stores. Alsinite will not melt at soldering iron temperatures, and it has the further advantage of being translucent, which makes it possible to see component locations from the reverse side of the board. Components are easily mounted by drilling small holes and poking the leads through.

The Swan 175, 140, and 120 models are almost identical single-conversion transceivers covering 75, 40, and 20 meters, respectively. I had little interest in 75 meters, but I did need a low-power SSB transceiver primarily for use with a 2 meter transverter. The original coverage of 3.8 to 4.0 MHz was too low in frequency for two meter transverting, so consideration was given to moving the transceiver frequency up to either 20, 15, or 10 meters. Of these three bands, I enjoyed operating on 15 and 10 much more than 20, but, on this part of the sunspot cycle, 10 is pretty dead. Also, it would have been hard to make the Swan vfo cover more than a small part of the 10 meter band. This left 15 meters as the best choice. The original tuning dial covered only 200 kHz, and, since I wanted full coverage of 15 meters, I added a range switch to the vfo so that 21.0 to 21.6 MHz could be covered in three 200 kHz segments. This gave more than full coverage of 15 meters and also made it possible to cover 144 to 145.2 MHz by switching between two crystals in the two meter transverter.

Block Diagram

A block diagram of the modified transceiver is shown in Fig. 1. I wanted many features not present in the original Swan, such as agc, S-meter, ALC, and CW capability, which called for a bit more complexity. Most of the blocks in Fig. 1, however, correspond to some stage in the original transceiver, and, since I replaced most stages one at a time, the physical layout is much the same.

The original 4-pole crystal filter on 5500 kHz has been replaced with an Atlas 8-pole filter on 5520 kHz. These filters are available from Atlas Radio for $36.40, including bfo crystals.[1] It was not absolutely necessary to replace the original filter, but the new filter gives markedly improved performance.

I replaced the 6DQ5 final with a 6146, mainly with a view toward eventual mobile operation. For mobile, the 6DQ5 presents a heater problem, since there is no 12-volt version, although there is a 12-volt equivalent of the 6146 – the 8032. The 6DQ5 is a much more powerful tube, however, and it will deliver 150 Watts CW – about 3 times as much as the 6146.

Included in Fig. 1 are the voltages supplied to each stage. Voltages suffixed with an (R) or (T) are only present in receive and transmit modes, respectively. Voltages without a suffix are present in both modes. Switching is accomplished with the original 3-pole double-throw 12-volt relay.

Vfo

For 15 meter operation, the vfo frequency must be moved up from 9.3 to 15.5 MHz. Since the modified vfo then operates on the low side of the signal rather than the high side, the transceiver will function on upper sideband with the original bfo crystal. The 3-position vfo range switch is mounted in the upper right-hand corner of the vfo shield box, and the shaft protrudes through the hole formerly occupied by the dial light.

The modified vfo circuit, shown in Fig. 2, uses many of the original components. All vfo componennts to the right of C1 in Fig. 2 are mounted on a small Alsinite circuit board which, in turn, is located in the space formerly occupied by the 12AU6 oscil-

lator tube. The original vfo coil, L4, was reduced to 7 turns, which gave it an inductance of 1.4 μH and a measured Q of 253 at 16 MHz. The two small range-switch coils, L1 and L2, are air wound and are mounted by their leads on S1. These coils are adjusted by squeezing or spreading the turns. When properly adjusted, this range-switching method provides exactly 200 kHz coverage on each range, and dial calibration comes out right on the nose. Voltage stability of the vfo has proven to be excellent; a 20% supply-voltage change moves the vfo frequency only 65 Hz.

There is some interaction between the different vfo adjustments, but, generally speaking, the function of L3 is to set the oscillator to frequency, and the tuning range is controlled by the two trimmer capacitors, C2 and C3. A 5.5 MHz trap, L8 and C4, is used on the vfo output to prevent any i-f signal from the transmitter mixer leaking back into the crystal filter through Q13.

Receiver

Fig. 2 also shows the receiver front-end circuits. The received signal is taken directly off the final tank circuit through the 3.3 pF coupling capacitor, C12. The back-to-back diodes, D1 and D2, limit the amount of rf transmitter voltage at the receiver input to a few volts. The transmit signal is further attenuated by diodes D3 and D4, which are biased into conduction in the transmit mode by the OA2 regulator tube current.

A broadband 21 MHz bandpass filter, made up of L6 and L7, is used between the rf and mixer stages for good i-f and image rejection. Notice that the lower end of L7 is bypassed to ground through the trimmer capacitor, C5. This capacitor is adjusted to series resonance with L7 at the image frequency of 10.3 MHz and effectively shorts out the image signal. With this technique, receiver image rejection measures 105 dB. Perhaps that's more than will ever be needed, but signals in the 10 MHz region become extremely strong at times, and it's good to have ample rejection.

The output of the mixer goes to T1, the original first i-f transformer, and to the crystal filter through the capacitive divider, C6 and C7. Diode D5 acts as a switch to disconnect the mixer from T1 when in the transmit mode. The other winding on T1, which originally went to the 7360 balanced modulator, now forms the collector tuned circuit for Q5 and couples in the transmitter DSB signal from the balanced modulator.

Referring now to Fig. 3, the i-f signal proceeds through the crystal filter, FL1, the first i-f stage, consisting of the emitter-coupled pair, Q7 and Q8, and on to the 40673 second i-f stage. A dual-gate MOSFET was used for the second i-f because strong signal-handling capacity is important at this point. Output from the 40673 is coupled to the product detector through T3, which is the original T3 modified by winding a 6-turn link on the bypassed end of the coil form.

The product detector is an adaptation of one first described in 1965; this circuit is also now being used in the Drake R4B receiver.[2] Audio from the product detector drives the first audio stage, Q10, as well as the agc amplifier, Q18 and Q19. The original Swan did not have an audio gain control, but, since I consider separate audio and rf gain controls essential in any receiver with an S-meter, I added an extra gain control for this purpose and mounted it in the hole formerly occupied by the receive-transmit toggle switch. This switch seems pretty much redundant, since the microphone push-to-talk switch does the same job.

The audio output stage is

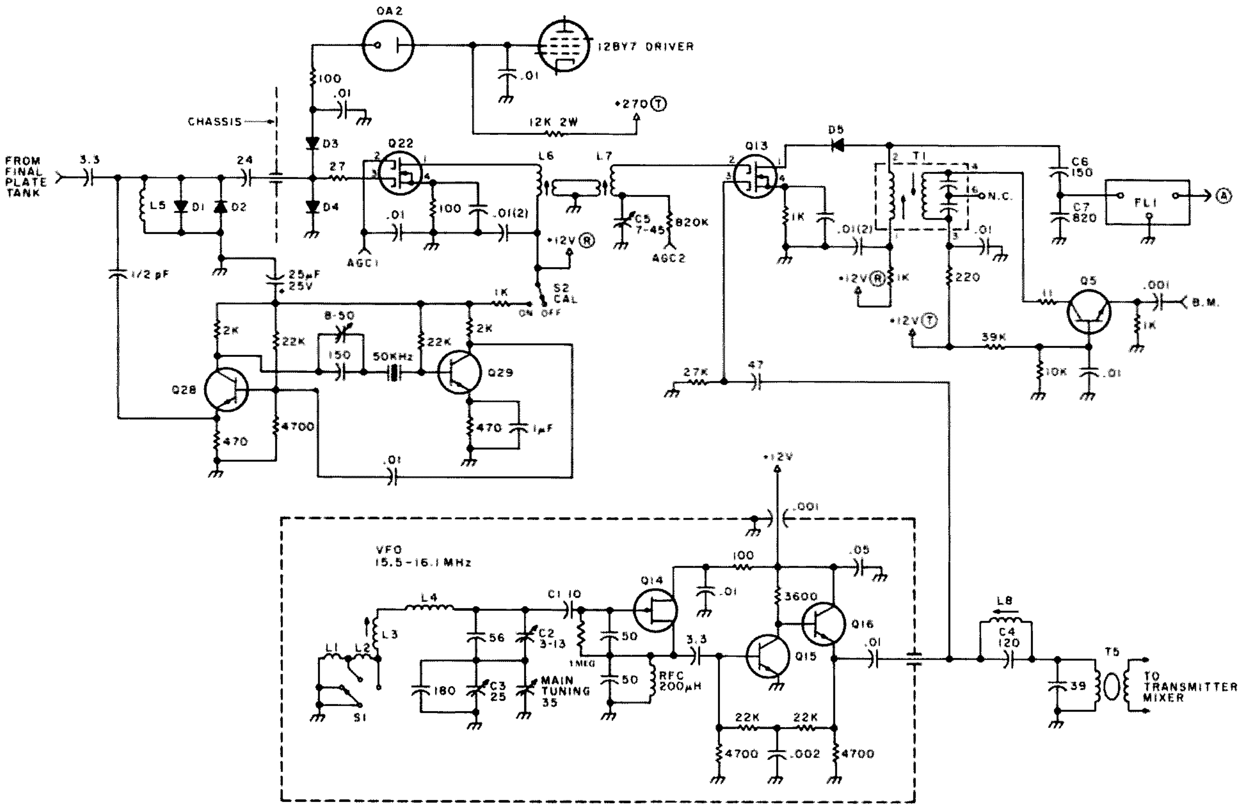

Fig. 2. Receiver front-end and vfo circuits.

unusual in that it is powered by +270 volts. This stage was originally a 6V6 and was the first tube to be replaced with transistors. Normally, transistor audio output would be class B and would be powered from the 12-volt supply. However, a class A output stage, although not quite as efficient, has the advantage of being a constant load on the power supply. It also minimizes the 12-volt power requirements. The maximum 12-volt drain for the entire transceiver is only 37 mA. The 2N3439s are rated at 350 volts collector-to-emitter breakdown, so two are used in series. This also helps reduce the collector dissipation, although it is still necessary to heat sink these two transistors. The original output transformer, T4, provides a good match to an 8-Ohm speaker.

Agc and S-Meter

I wanted a good fast-attack/slow-decay agc system, and the circuit shown in Fig. 3 has worked well. Transistors Q18 and Q19 form a conventional audio amplifier and drive the agc rectifier, D10 and D11, through transformer T7. Transformer coupling may not be absolutely necessary at this point, but it does facilitate full-wave rectification, which helps to minimize the rise time. The transformer, a UTC Ouncer, is surplus; originally it was a 400 Hz, 115 V to 115 V c-t device, but anything with approximately the right turns ratio and sufficient primary inductance can be used for T7. The agc decay time is determined by the time constant of C8 and C9 (2 μF total) discharging through R1 and R2. This fixed-time constant of two seconds is about right for me, but it could be made variable by switching different resistance values from the agc line to ground.

Transistors Q20 and Q21 are used to drive the S-meter. The original cathode current meter could not be used for an S-meter since it was 300 mA full scale; it was replaced with a Micronta (Radio Shack) 0-1 mA S-meter. The S-meter also doubles as the final amplifier cathode meter and circuit values are chosen so that its 0 to 10 scale corresponds to 0 to 100 Watts input.

Notice that full agc voltage is applied only to the rf stage, Q22; the mixer and second i-f stage receive half voltage (agc #2). Agc performance is plotted in Fig. 4. For signals stronger than 1.2 microvolts, a 100 dB range of input signal causes less than a 10 dB change in audio output.

Switch S6 serves as an mgc-agc switch. In the manual-gain position, the meter still reads the output of the agc detector, but, since agc is not functioning, the S-meter reading will be approximately proportional to signal strength, rather than a logarithmic response. This is a handy feature for precise peaking of antennas, VHF converters, receiver alignment, etc.

Speech Amplifier and Balanced Modulator

According to the *ARRL Handbook*, 12 dB of audio speech clipping will give a 3 dB improvement in SSB signal-to-noise ratio. That's a very cheap and simple way to double your talk power, although admittedly not as effective as speech processing.

Fig. 5 shows the speech amplifier and balanced modulator circuits. The speech amplifier, Q1 and Q2, is designed to accommodate either high-impedance dynamic or ceramic microphones. Low audio frequencies are attenuated by the small values of capacitors C10 and C11, and audio clipping is accomplished by the back-to-back

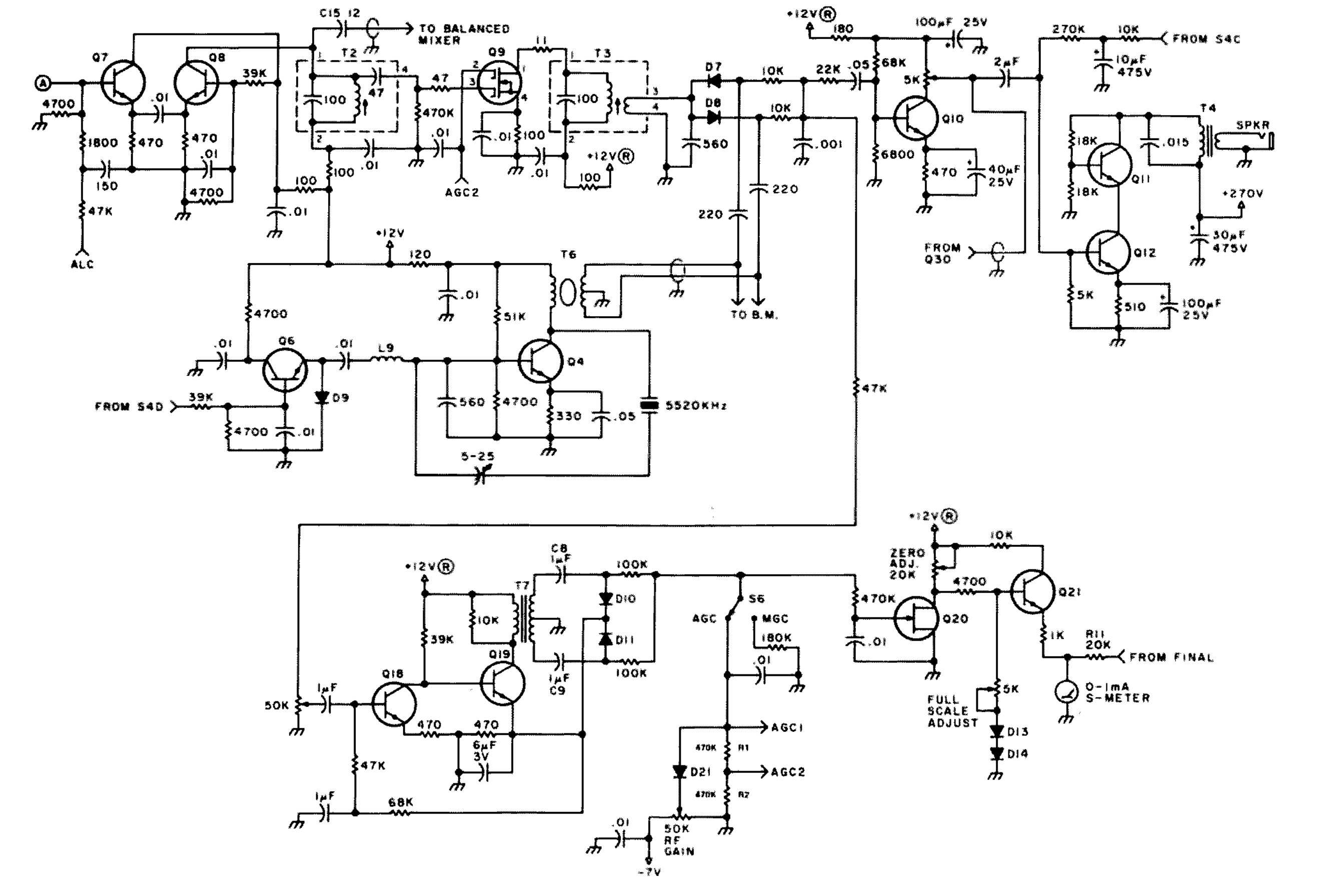

Fig. 3. Final stages of the receiver showing bfo, agc, and S-meter circuits.

diodes, D15 and D16. There is no gain control ahead of the clipper; clipping level is controlled by the distance between the operator and the microphone.

Several balanced modulator circuits were tried, but the simplest turned out to be the best. The bfo supplies push-pull drive to both the balanced modulator and the product detector from T6. The first version of this balanced modulator used 1N270 germanium diodes, but there was trouble with temperature drift of the carrier balance until they were replaced with silicon diodes. If you use the Atlas filter, you can replace the 1k pot, R3, with a pair of matched 500-Ohm resistors and still get more than enough carrier rejection with the front-panel carrier-balance control. This control, incidentally, could well be removed from the front panel, since it rarely needs adjustment.

The grounded-base stage, Q5, is needed more as an isolating switch than as an amplifier. In the receive mode, any bfo signal leaking through the balanced modulator would otherwise be amplified by the i-f stages and would unbalance the product detector. Switching is accomplished by removing the supply voltage from Q5 during receive.

The 5.5 MHz DSB signal is applied to the SSB filter through T1, the original first i-f transformer, connected as shown in Fig. 2 and Fig. 5. The DSB signal level can be adjusted by detuning Q5's collector tuned circuit in T1. The SSB signal from the filter is amplified by the first i-f stage, Q7 and Q8, and applied to the transmitter mixer through C15.

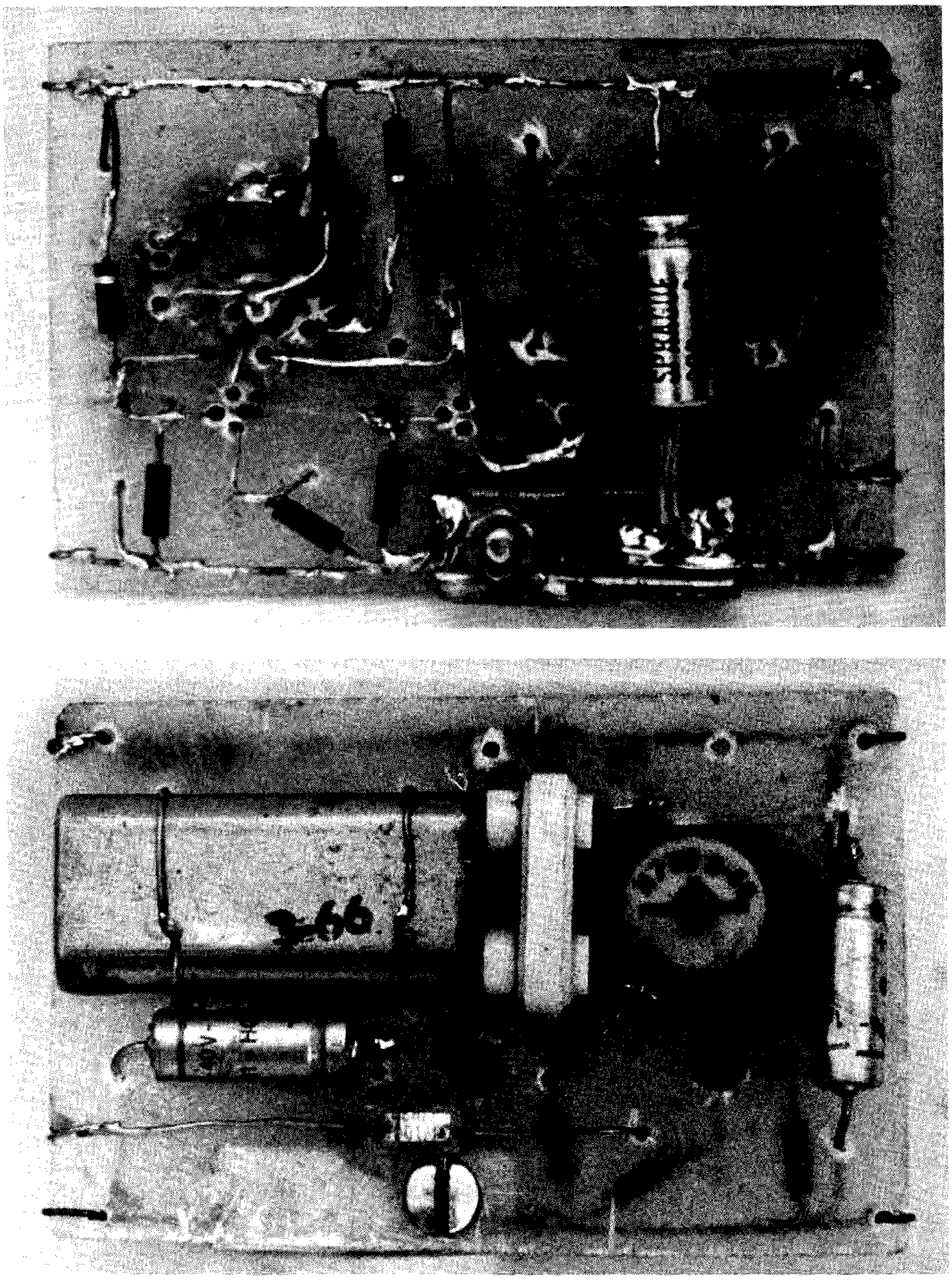

Front and rear views of the 50 kHz crystal calibrator demonstrate the construction techniques used for a typical circuit board. The L-shaped piece of sheet metal on the lower edge secures the board to the chassis and also serves as ground connection.

Balanced Mixer, Driver, and Final

For the transmitter up conversion, I wanted to use a balanced-type mixer in order to reject the 16 MHz vfo signal. I first tried a commercial ring-modulator type of double-balanced mixer, but I found that it required quite a bit of vfo drive (+7 dBm) and also suffered from too much conversion loss. The weak output required an additional amplifier stage to drive the 12BY7, and three stages straight through at 21 MHz can give you some sticky feedback problems.

The two-transistor balanced mixer shown in Fig. 6 has ample gain and does a good job of rejecting the vfo signal; the worst spurious output is the vfo second harmonic, on 31 MHz. This could have been trapped out, but I preferred to use a two-pole filter between the balanced mixer and 12BY7 driver, and thereby completely clean up all spurious mixer products. The original butterfly exciter-tune capacitor was replaced with a 3-gang 5 to 20 pF variable from an old FM radio. This capacitor, C17, tunes the two-pole filter and also the 12BY7 plate circuit.

The tuned circuit consisting of L10 and C16 resonates to 5.5 MHz, and, because of its low L to C ratio, provides a low-impedance bypass for the base of Q25 at the vfo frequency. Potentiometer R6 is normally adjusted to equalize the dc emitter currents, as measured with a VTVM

across the matched resistors, R4 and R5. If you are a perfectionist, you can adjust it for minimum vfo feedthrough to the driver, but it will do nothing for the second harmonic on 31 MHz. I used a toroid for T5, but you could probably get by with an ordinary solenoid-type transformer, at this point.

The driver requires neutralization, which is accomplished through C18, and, because of the 12BY7's high transconductance, neutralization is a bit critical. Properly neutralized, it will be possible to tune C17 throughout its range without any sign of instability.

A link on L13 connects to a phono jack on the rear apron of the chassis to provide exciter output for VHF transverters. Driver output is about a quarter Watt, and the vfo signal at this point measured 62 dB below peak output. The vfo second harmonic on 31 MHz measured 55 dB down. When the rig is used with a transverter, the 6146 heater is switched off by a toggle switch (S5) which is also located on the rear apron.

Cathode bias was chosen for the final to eliminate the need for an additional supply voltage and also to simplify the ALC circuit. Cathode voltage is held to a fixed value by the transistor regulator, Q27. Base voltage on Q27 is adjusted with the original 5k bias-adjustment pot, R9, and is regulated by an NE-17 neon bulb, although a 60-volt 1-Watt zener diode would work just as well.

The 7.3-volt zener in series with the emitter of Q27 reduces the collector-to-emitter voltage and heat dissipation of this transistor. Collector dissipation is further reduced by R10, and this resistor also provides a sampling voltage for driving the cathode current/S-meter through R11. Because of the S-meter's low resistance of 100 Ohms, the cathode current circuit does not interfere with the S-meter function, nor vice versa.

Screen-grid neutralization is used on the 6146, as this is a bit simpler than the original bridge-type neutralization and works fine in a singlebander. The original plate-tuning and loading capacitors are used in the final amplifier plate circuit, but the parasitic suppressor, plate current rf choke, and tank coil have been changed. Notice that the high-voltage lead to the 6146 plate is double filtered inside the final amplifier compartment; this was necessary to prevent rf feedback to earlier stages.

ALC

Automatic level control is derived from the 6146 grid current. When the 6146 heater is switched off, grid current is simulated by diodes D19 and D20. In either case, a voice peak will cause grid current (or diode current) to flow into the base of Q23, which will cut off collector current and allow C20 to charge through R7 and D21. This results in a positive gate voltage on Q24, which will reduce its drain voltage and lower the forward bias on the first i-f amplifier, Q7, thus reducing i-f gain.

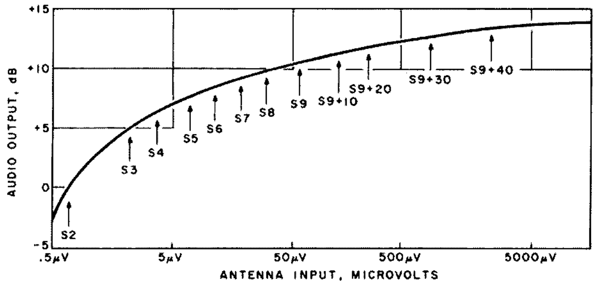

Fig. 4. Agc performance and S-meter response of the transistorized Swan.

The charge on C20 is retained after the voice peak, because D21 is then reverse biased, and C20 gradually discharges through R8 and allows the i-f gain to slowly build back up. The action is very similar to fast-attack/slow-decay agc. The LED in the source lead of Q24 is mounted on the front panel just below the S-meter; this LED will flash a warning if a voice peak causes any grid current to flow. The ALC range is about 15 dB. It could have been made greater, but, if the mike gain is adjusted so that a flash occurs on only occasional peaks, flat-topping will be adequately prevented.

Because of the very wide range of I_{dss} for JFETs of any given type, the zener voltages of the two zener diodes associated with Q24 will have to be individually selected. The values given in Fig. 6 worked with my particular FET and can be taken as starting points, but the I_{dss} for the 2N3819 varies over a ten-to-one range. This advice also applies to the drain resistor of Q1.

CW and Switching

I wanted full CW capability with sidetone monitoring, and Fig. 7 shows how this was accomplished. For CW operation, it's necessary to shift the bfo frequency up into the crystal-filter passband in order to get enough carrier through the filter for full drive. The frequency is shifted only in the transmit

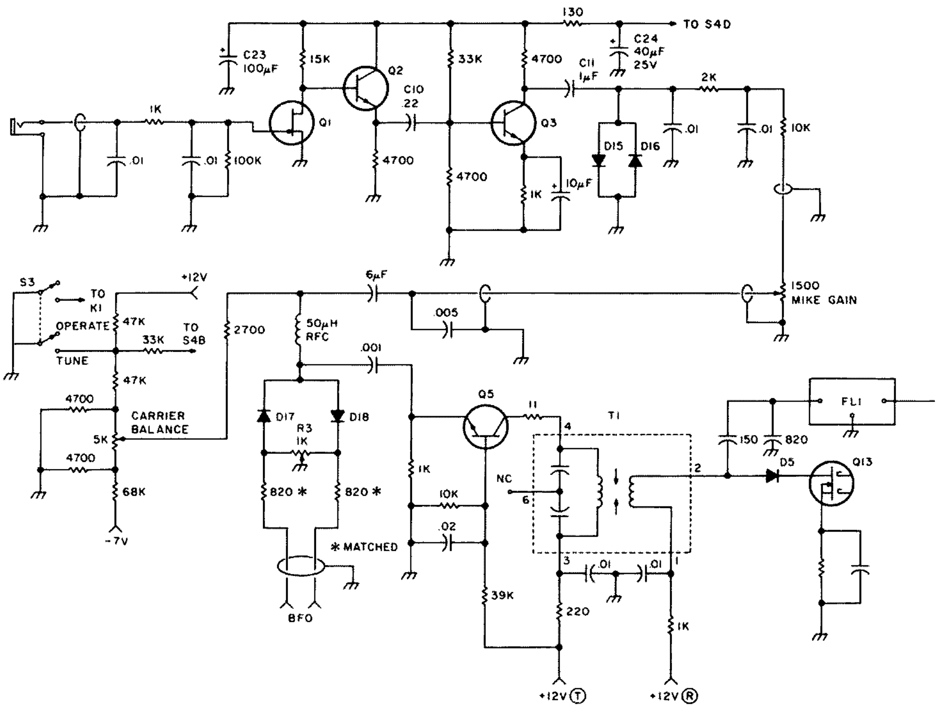

Fig. 5. Speech amplifier and balanced modulator.

Parts List

Diodes and transistors

D1, D2, D3, D4, D5, D10, D11	1N914
D7, D8, D9	1N270
D13, D14, D21	1N458
Q4, Q6, Q7, Q8, Q10, Q15, Q16	
Q18, Q19, Q21, Q28, Q29, Q30	2N2222
Q5	2N3565
Q9, Q13, Q22	40673
Q11, Q12,	2N3439s with heat sinks
Q14	2N4220
Q20	2N3819
D15, D16, D17, D18, D19, D20, D22	1N914
D21	1N458
D23	any rectifier diode
Q1	2N3370
Q2, Q3, Q6, Q23, Q30	2N2222
Q5, Q25, Q26	2N3565
Q17	2N306, or equivalent
Q27	ECG 129 with heat sink
Q24	2N3819
Q31	2N2102, or equivalent

Coil data

L1, L2	3½ turns #22 e. 1/8" i.d., 0.2" long, air wound
L3	0.32 uH, 5 turns #24 vinyl insulated, close wound on ¼" diameter slug-tuned form
L4	1.4 uH, 7 turns of 1" miniductor
L5, L14	5 uH, 40 turns #32 e. close wound on ¼" diameter form
L6	30 turns #36 s.c.e. close wound on ¼" diameter slug-tuned form, 1 turn link #24 vinyl insulated
L7	48 turns #36 s.c.e. close wound on ¼" diameter slug-tuned form, 1 turn link #24 vinyl insulated
L8	30 turns #30 e. close wound on ¼" diameter slug-tuned form
L9	2.6 H, 28 turns #30 e. close wound on ¼" diameter slug-tuned form
T6	Amidon T-50-2 toroidal core, 36-turn primary, 16-tum center-tapped secondary #32 e.
L10	16 turns #30 e. close wound on ¼" diameter slug-tuned form
L11-L12	14 turns #28 e. close wound on ¼" diameter slug-tuned form, 1 turn link #24 vinyl insulated
L13	10 turns #28 e. close wound on ¼" diameter slug-tuned form, 1 turn link #24 vinyl insulated
L14	40 turns #32 e. close wound on ¼" diameter slug-tuned form
L15	13 turns #30 e. close wound on ¼" diameter slug-tuned form
L16	70 turns #34 s.c.e. close wound on ¼" diameter form
L17	9 turns #12 bare, air wound, 1" i.d., 1¼" long
T5	Amidon T-37-10 toroidal core, 7-turn primary, 4-turn secondary
Z2	6 turns #30 e. on 120-Ohm half Watt resistor
Z3	3 turns #18 on 220-Ohm 2-Watt resistor

mode, by Q6, which is used as a switch. When S4D is turned to the CW position, the 12-volt supply is removed from the speech amplifier and applied to the base of Q6 through R13. Both Q6 and D9 are then biased into conduction, and this effectively bypasses the left end of L9 to ground. The result is an increase in bfo frequency of about 500 Hz, which puts it well within the filter passband. In the receive mode, there is no shift, so your CW signal will always be zero-beat with the station you are working, provided you tune for a 500 Hz beat note.

The same switch section, S4D, turns on the sidetone oscillator, Q17. Output from this twin-T audio oscillator is applied to the base of Q12 through capacitors C21 and C22. Cathode keying of the 12BY7 driver provides a positive key-up voltage for the base of Q30, which makes it conduct and thereby shunt the sidetone output to

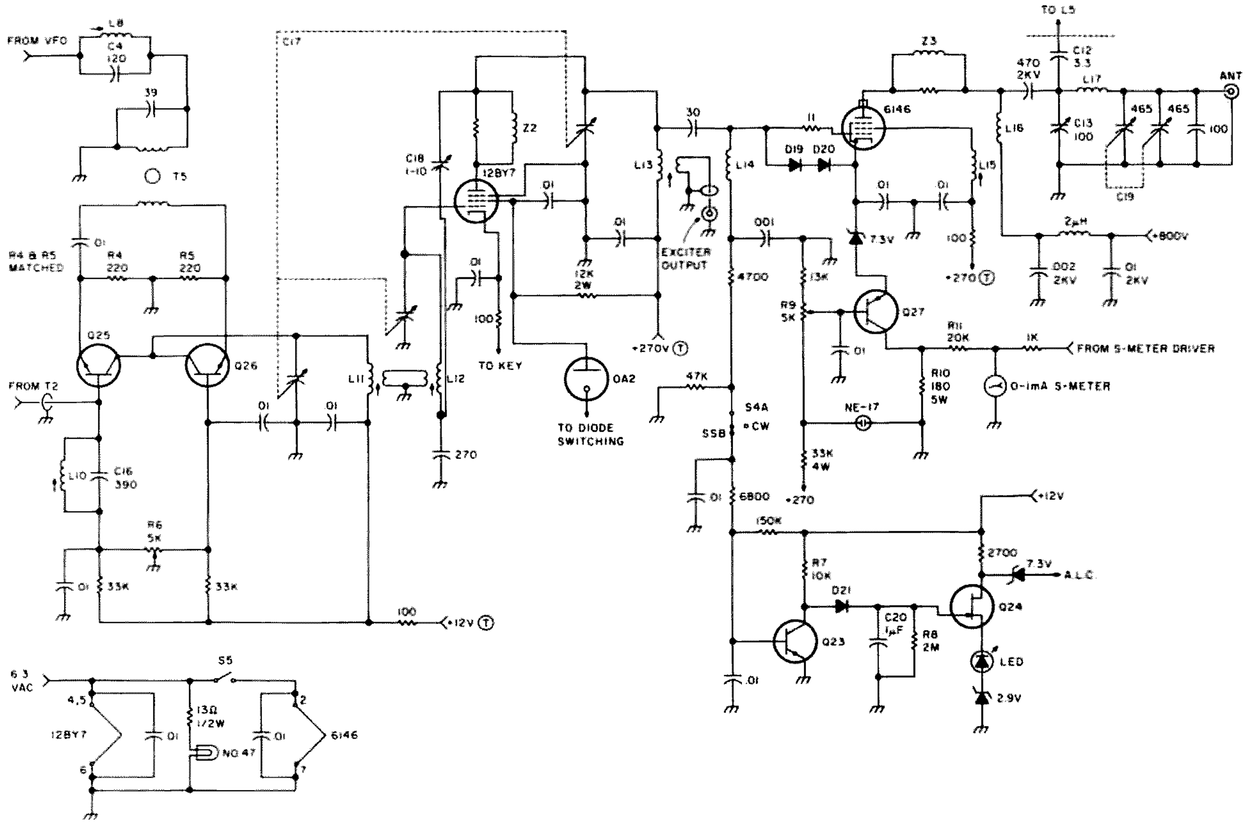

Fig. 6. Transmitting mixer, driver, and final.

ground. With the key down, Q30 is turned off, and the audio tone can reach the base of Q12.

The receiver audio gain control has little effect on sidetone volume unless it is turned all the way down. A separate volume control could have been added, but the level is about right for my ear, as is. Forward bias for the base of Q12 is provided in the CW transmit mode by S4C.

A third section of the SSB-CW switch, S4B, is used to short out the key jack in the SSB position and to severely unbalance the balanced modulator in the CW position. The fourth section of this switch, S4A, is shown in Fig. 6; this section switches out the ALC so the final can run class C for CW. The SSB-CW switch is mounted in the hole formerly occupied by the front-panel on-off toggle switch, which, I think, is more appropriately located on the external power supply.

Switch S3 is the original tune-operate switch; in the tune position, this switch actuates the changeover relay, K1, and unbalances the balanced modulator, as in the CW mode. With the original crystal filter, this switch worked fine for tune-up, but the Atlas filter has such steep skirts that very little carrier gets through, even with the balanced modulator completely unbalanced. This could be remedied by adding some additional diode switching to shift the bfo upwards, as in the CW mode, but I haven't bothered to do so.

Fig. 7 also shows the relay switching. Because there are large bypass and filter capacitors on both sides of the relay contacts, resistors are placed in series with the contacts to limit peak currents. When one capacitor is discharged directly into another, peak current is theoretically infinite. In practice, it is not infinite, of course, but it can be large enough to erode the relay contacts.

Transistor Q31 is used to

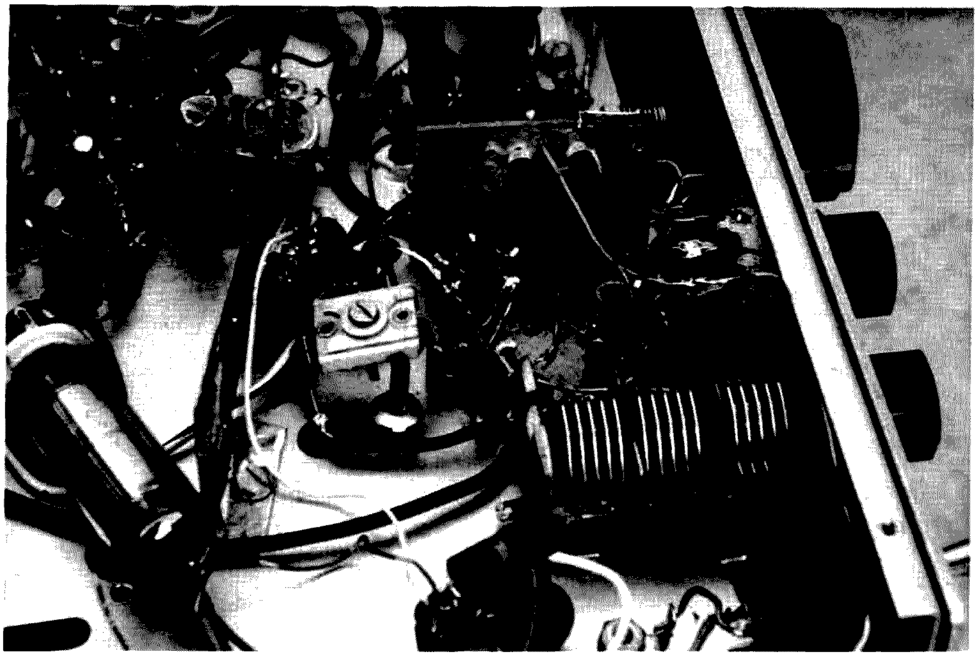

This under-chassis shot shows the 3-gang exciter-tune capacitor, C17. Above it can be seen the transmitter balanced mixer circuit board with Q25 and Q26. The trimpot on the right side of the board is R6.

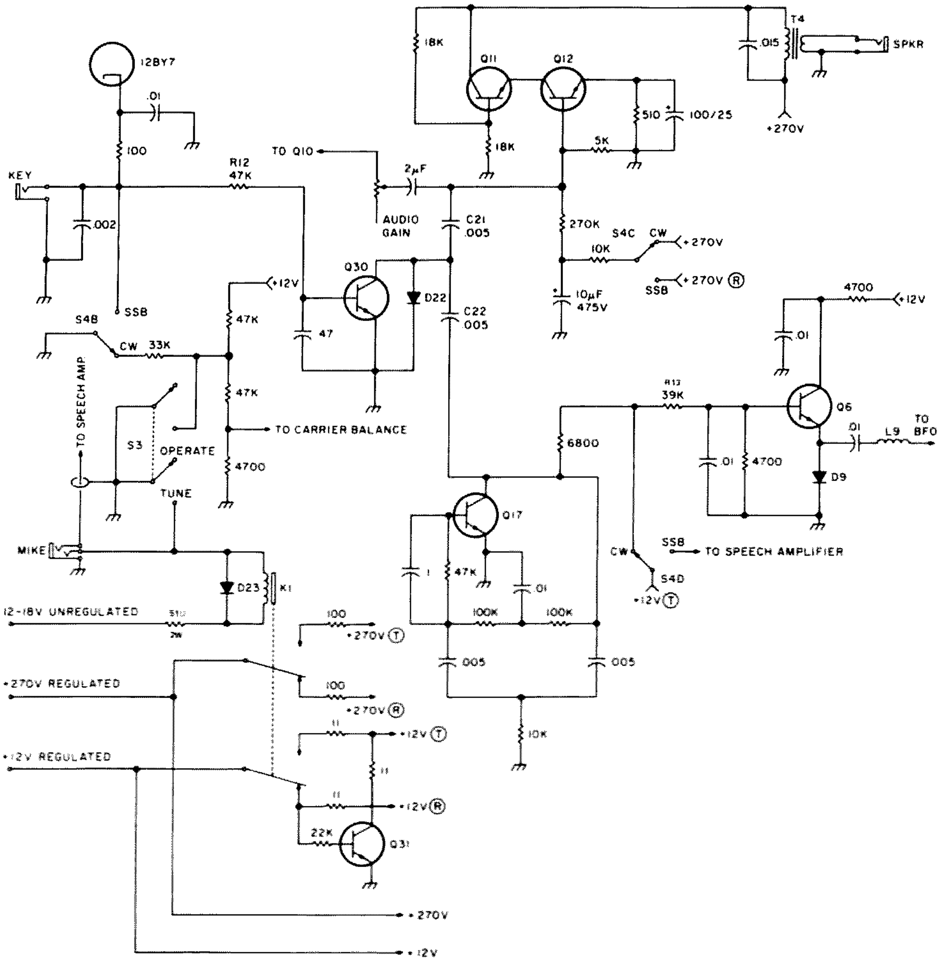

Fig. 7. Relay switching, keying, and SSB-CW switching.

quickly discharge capacitors C23 and C24 (Fig. 5) when the relay returns to the receive position. Otherwise, the speech amplifier remains activated for a brief period after changeover and causes a momentary "squeak" to occur.

Power Supply

One advantage of replacing tubes with transistors is that power supply wattage requirements are substantially reduced. Most of the power can go into the final amplifier, where it belongs, rather than into the plates and heaters of intermediate stages.

Since this final amplifier uses cathode bias, the plate and screen supply voltages should be about 50 volts higher than what they would be with grid bias. The final plate needs about 800 V at 100 mA peak, which can be handled by an old TV transformer and solid state bridge rectifier. Maximum drain on the 270-volt supply is 40 mA; in my case, this is regulated by a 6SJ7/6L6 combination.

The maximum current drain on the 12-volt supply is also only about 40 mA, and regulation can be handled by a small TO-5 transistor. A separate, unregulated 12- to 18-volt input for the changeover relay was provided in order to minimize the drain on the regulated 12-volt supply. This voltage can be taken off the 12-volt supply at a point between the rectifier and the regulator.

The other supply requirements are 6.3 V ac at 2 Amps for the heaters and dial light and -7 volts at 0.2 mA for the rf gain and carrier balance controls. The latter voltage can be easily obtained by rectifying and filtering the 6.3 V ac heater supply and regulating with a 7-volt zener diode. ■

References

1. Atlas Radio, Inc., 417 Via Del Monte, Oceanside CA 92054.
2. "The Tubeless Product Detector," *CQ*, March, 1965.

CONTESTS

from page 15

change counties or bands. Repeat contacts between mobile stations are permitted provided they are on a different band or in a different county.

EXCHANGE:

Signal report, county, and state (country for DX). Mixed mode contacts are permitted provided that one station is on SSB. (Mobiles, please keep an ear for CW county hunters calling!)

FREQUENCIES:

3920-3940, 7220-7240, 14275-14295, 21375-21395, 28575-28595. Look for mobiles on 15 meters on even numbered hours.

Please note: Again, this year there will be a "mobile window" of 10 kHz on the following frequencies: 3925-35, 7225-35, 14280-90. Mobiles will be in this 10 kHz segment and fixed stations are asked to refrain from calling "CQ Contest" in this segment. After working mobile stations in the "window," fixed stations are requested to tune and work other mobile stations or QSY to the outer edges of the suggested frequencies to call CQ or work other fixed stations in the contest. This will allow the mobile running lower power a chance to be heard and worked in the contest.

SCORING:

Contact with a fixed/portable US or Canadian station = 1 point. Contact with DX stations (including KL7 & KH6) = 5 points. Contact with mobile stations = 10 points. Multiplier is total number of US counties plus Canadian stations worked; take credit for a county only the 1st time it is worked. A Canadian station counts each time it is worked. Final score is total number of QSO points times total number of different counties and VE stations worked.

ENTRIES:

Logs should show date/time in GMT, station worked, report exchanged, county, state, band, claimed points (1, 5, or 10), and each new multiplier numbered. Official log sheets and summary sheets are free for a #10 SASE or SAE and appropriate IRCs from John Ferguson WØQWS, 3820 Stonewall Ct., Independence MO 64055. Submit all entries to the same address no later than June 1 to be eligible for awards; DX should use air mail.

AWARDS:

Plaques to highest scoring fixed US or VE, DX, mobile, and 2nd mobile certificates to top 10 fixed and mobile stations in US and VE and to the highest scoring DX in each country. Only single operator stations are eligible for these awards, but multi-op certificates may be issued if merited. A station may enter as both fixed and mobile, but separate scores are required.

Note: If you should need any counties on the MD-DEL peninsula or in the Southern NJ area, look for us mobile during the contest. If everything goes according to plan, we will be operating on all bands 80-15 meters for the entire weekend, covering as much territory as possible during the contest.

HOLIDAY-IN-DIXIE FESTIVAL QSO PARTY

Starts: 1800 GMT April 21
Ends: 2400 GMT April 30

Sponsored by the Amateur Radio Club of Shreveport LA (ARCOS). Contact a station within 75 miles of Shreveport, exchange contest information, and send an SASE to: Holiday-in-Dixie QSO Party, PO Box 1485, Shreveport LA 71164. For extra points, contact ARCOS members and get their Holiday-in-Dixie certificate number in addition to the contest information. To kick off the 10-day festival, ARCOS members will be on the air as a group from 1800 GMT April 22 until 2400 GMT April 23 continually, but contacts can be made anytime during the festival.

The Holiday-in-Dixie Festival was begun in 1948 to commemorate the signing of the Louisiana Purchase and now includes parades, Queen's Pageant, and various activities for all ages. Estimated attendance is 350,000, and this is the first year that ham radio activities will be included as a new event, so certificates should be very desirable.

Suggested frequencies are: Phone—3935, 3975, 7125, 14280, 21380, 28575; CW—3555, 3710, 7055, 7110, 14055, 21130, 28130; VHF—50.110± on SSB, 52.525± FM simplex, 145.100± SSB, 145015 FM simplex.

Local coordination and contacts possible on 146.07/67 and 146.16/76, as these will be used to demonstrate 2 meter ham radio to festival visitors.

Stations may be worked once per band per mode. Local stations may work each other. Stations send RS(T), power, and ARRL section or country. Ask for a Holiday-in-Dixie number from ARCOS members. Score 1 point for 1 contact, 2 points for 5 contacts, 3 points for 10 contacts, 4 points for 15 contacts or 10 ARCOS contacts.

BERMUDA AMATEUR RADIO CONTEST

Starts: 0001 GMT April 22
Ends: 2400 GMT April 23

Sponsored by the Radio Society of Bermuda. Operate no more than 36 hours of the 48-hour contest period. Off periods to be clearly logged and each period to be of not less than 3 consecutive hours. All stations shall be single operator only and must be operated from their own private residence or property. Each station may be worked only once per band regardless of mode. Use all bands 80 to 10 meters, but no crossband or crossmode contacts permitted.

EXCHANGES:

All stations exchange RS(T) and following: UK—county, US—state, VE—province, Bermuda—parish.

US and VE stations must exchange reports with UK and Bermuda stations only. UK stations must exchange reports with US, VE, and Bermuda only.

SCORING:

Each QSO = 5 points. Multiplier for all stations outside Bermuda is the total number of VP9s worked on each band. The same VP9 can be worked on all bands. For Bermuda stations, it is the total number of states, provinces, and counties worked on each band.

AWARDS:

Top scorer in each state, province, and county shall receive a certificate. Trophy to top scorer in VE, US, and UK. Round trip air transportation plus accommodation will be provided to overseas winners to enable them to receive their awards.

ENTRIES

All dates and times in GMT. All contestants to check for duplicates and to compute their own scores. Sign a statement that all rules and regulations have been observed. Each page must be clearly marked with call, name, and address, and must be received by the contest committee before June 30. Send entries to: PO Box 275, Hamilton 5, Bermuda.

Note: Please submit a log if you operate in the contest. This is the only indication of

Continued on page 133

Stirling M. Olberg W1SNN/WR1AJE
19 Loretta Road
Waltham MA

The Challenge Of 10.5 GHz

—use it or lose it to Smokey

The reader interest in this series of microwave-oriented projects has been tremendous. Stirling indicated in a letter to 73 that he has been flooded with requests for additional information relating to the original "Smokey Detector" article (73, Holiday, 1976). Please bear in mind that experimenting with UHF and microwave devices requires restraints not required at lower frequencies. There is considerable evidence that microwave radiation, even at very low levels, can have strange physical effects. Research in this area is continuing, so, for the present time, play it safe. Under NO circumstances look into the horn of an operating microwave transmitter. Heating of the inner eye may occur, causing sight impairment. Do not direct the beam at other persons. Allow common sense to prevail while experimenting with microwaves. The New Yorker Magazine *published an article ("The Roving Reporter — Microwaves," Dec. 13 and 20, 1976) concerning the research into the possible effects of microwave radiation. Read it. — Ed.*

Photo A. The tuning screws and modulator diode are shown in a different position from that described in the text. These components may be located in either position, but the detector diode must be fed as shown to allow access to the tuning screws.

The smokey detector[1] was presented to drivers for, among other things, the safety value it presented. It was intended to provide a radar warning and therefore slow the driver down to a safe speed.

There are many possible options for modifications of this device for the smokey constructor who uses his imagination. I have received a lot of letters asking how to incorporate them.

One very fine idea came from Wayne W2NSD. He suggested that the smokey detector have an oscillator which would operate on X-band incorporated into the design. This addition, with suitable circuitry, would make it a transceiver. It will also do many more things that can provide some amusing effects. This single addition was the subject of many requests for a how-to-do-it circuit.

The addition will make the unit into a transceiver and Doppler radar. In fact, the addition of the oscillator will make it exactly like the rf head of surveillance radars used in traffic control.

Other letters indicated an interest in a variable-frequency modulator oscillator giving a range of 300 to 2000 Hz. I even had one request for the addition of the Trekkie circuit, so the Starfleet of the UFPCC could be contacted.

Let's get on with the circuit additions by examining the electronics first. You will see that the primary circuit, consisting of the smokey de-

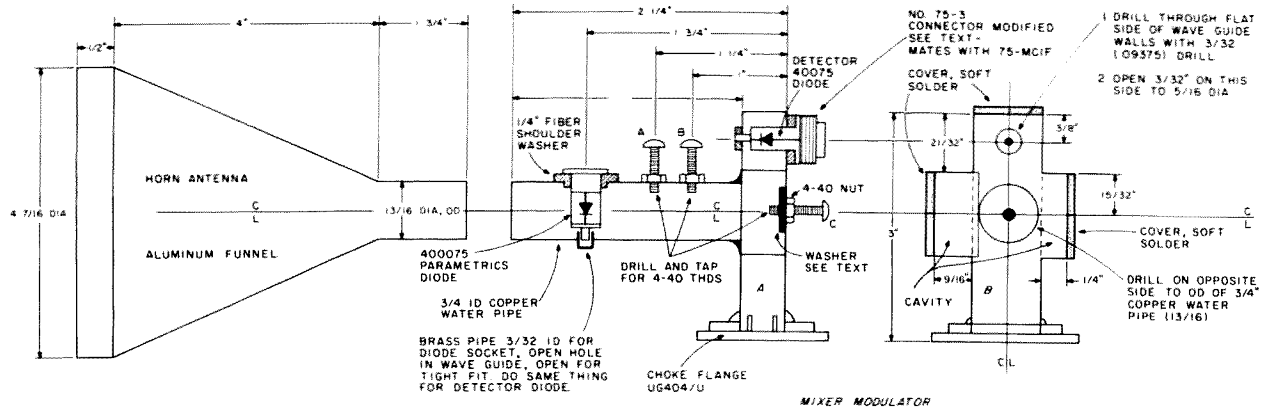

Fig. 1. The mixer modulator. Materials: 4-7/16" diameter funnel; ½" x 1" copper waveguide — RG-52/U.

tector preamplifier, is still incorporated. The amplifier is roughly the same circuit, except that it consists of integrated circuits, occupying a much smaller space.

Also, this unit is more easily adapted to serve as part of the transceiver modulator. The microphone incorporated is a standard CB mike which has a switch that is push-button operated to do the many functions required in a CB transceiver. This switch blends nicely into the transceiver, and, best of all, it's inexpensive.

Now examine the function switch, S3. You can see that it serves to shift the unit from duty as a transceiver to performance as a Doppler radar or smokey alarm. Note that, when in the alarm position, a variable oscillator at audio rates should meet the requirements of the variable-frequency modulator enthusiasts. Note also that the control switch for this circuit, a 3-position switch, allows it to modulate the diode with a "bee baw" frequency response, a wailing sound familiar to all of us, and, of course, most importantly, a variable-frequency oscillator at the audio rate of 300 to 3925 Hz.

This oscillator may be calibrated in its frequency range, but, for better reference, the dial can be directly marked in miles per hour by dividing the frequency output of the oscillator by the one mph Doppler frequency,[2] 31.4 Hz. The variable-frequency oscillator pot dial will then be calibrated from 9.5 to 125 mph.

In the Doppler radar function position, the Doppler sounds of vehicles moving toward or away from the antenna will be easily recognized as a beat that rises in frequency when a vehicle approaches and drops in frequency when the vehicle recedes.

Many other sounds, such as aircraft and large ships, can also be detected. A helicopter can be heard quite a while before it can be seen. This technique is used as an intruder alarm in many burglar warning systems.

In the Starfleet warning position, Trekkies[2] will, of course, be able to carry on their communications with one another simply by turning the switch to that position and pressing the mike button, which momentarily sends the ID signal.

In the transceive position, speech modulation is applied to the Gunn effect diode oscillator. The level of modulation is controlled by the audio amplifier volume control. The speaker is disabled so that no feedback will exist. Note also that an audio jack is incorporated so that the signals for any function can be directed into the car stereo or two meter audio system. When this option is used, the speaker switch, S4, must be turned off.

Note that a voltage regulator is shown for the Gunn oscillator. This is a three-terminal regulator and should not be left out in favor of some lesser regulator system. Failure of the diode will surely bring forth new expletives, since the diode costs approximately $25. A second protective circuit is made up of a low-voltage, high-current diode connected after the fuse. If primary voltage reversal occurs, this diode will blow the fuse before most of the semiconductors are ruined.

A tune-up aid, consisting

Photo B. Gunn effect oscillator assembly parts. Not shown is the cover iris to the waveguide flange.

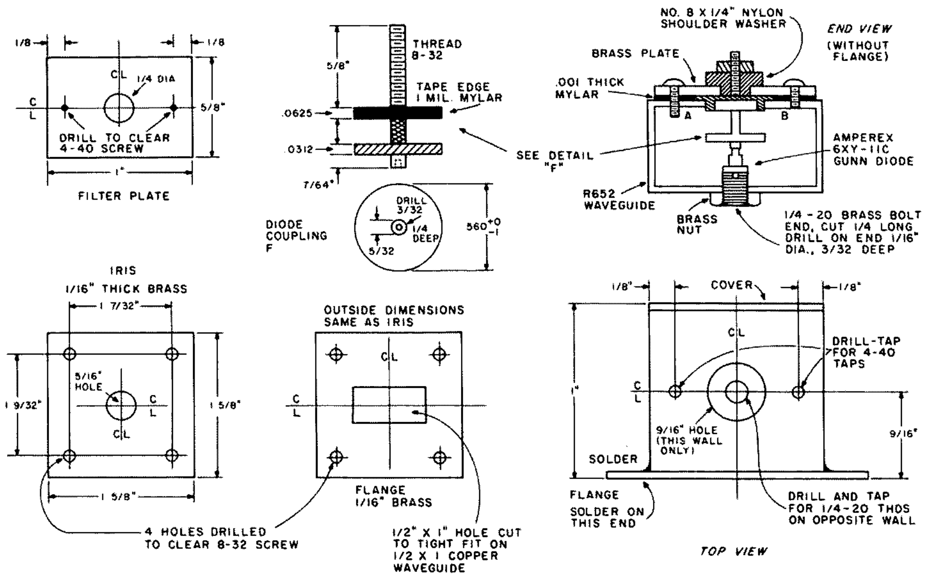

Fig. 2. Gunn diode oscillator for 10 GHz.

of a microwave diode connected across a meter, is used in the initial tune-up and can be temporarily constructed for this purpose. A VOM and a muffin fan are all that are needed to tune this rig up.

Construction of the electronics can be done on a small piece of perfboard. Since there are no real problems in the layout other than those common to audio circuits, I will discuss the microwave plumbing, which must be fabricated by the constructor. Hand tools are all that are needed, with one exception – the diode coupling unit, which must be turned on a lathe.

The horn for this unit is made from an aluminum funnel of the approximate dimensions shown in Fig. 1. The throat of the funnel must be broached out to take the taper out of it. Funnels of this size can be obtained from a farm supply dealer and are primarily used in dairies. I broached mine to shape with a 13/16-diameter rod stuffed down the funnel throat gently tapping the rod with a hammer. It's easier than you think, but care must be used or the metal will tear. When the broaching is completed, the throat of the funnel will slide over the outside diameter of the 3/4" i.d. copper water pipe section used as the diode modulator and circular waveguide to rectangular guide adapter shown in Fig. 1(a), the mixer modulator.

To construct the mixer modulator plumbing, start by cutting off a section of RG-52 waveguide so that each end is square and deburred. Lay out the holes as shown in Fig. 1(b). Drill the two sets of holes by first running a number 43 drill in each location shown, through both walls. These holes will serve as pilot holes for further drilling of larger holes and, therefore, should be drilled carefully so that the holes are directly in line with each other.

Open the holes, as shown in Fig. 1(b). Deburr each hole, and then open and tap for threads, as shown in Fig. 1(a). Solder in place small sections of 3/32" i.d. pipe to serve as sockets for the ends of the Parametrics 400075 Schottky diodes. This pipe is obtainable at model shops. Do the same thing for the detector diode. Locate a 3/8"-diameter, 1/16"-thick brass washer that will pass a 6-32 screw on the wall of the waveguide facing the copper pipe, as shown in Fig. 1(a). Solder the washer in place so that it is concentric with the screw. Complete drilling all holes as shown in Fig. 1(a) on the copper pipe. Complete tapping all holes on the pipe. Lay this piece aside for the moment.

Measure off the two openings shown for the waveguide cavities on the ½-inch wall of the waveguide section you just drilled. Carefully and squarely saw through the walls so that the saw cuts just break through the sidewall metal. Then file the edges between these cuts until the flats fall away. Level these cuts off so that the thickness of the sidewall is exposed. Next, cut two small pieces of waveguide, as shown, for the sidewall cavities. Cut these square, and deburr them. Clean all surfaces with "Brite Dip" or soldering acid. Now assemble the sidewall cavities, as shown, and hold them in place with a C-clamp. Be sure to place the ½ x 1-inch covers under the C-clamp, and soft-solder all parts in place. Next, place a flange (choke-type UG-404/U) on the waveguide end shown in Fig. 1(a). Be sure it is square with the vertical wall. Then solder it in place. Put a ½ x 1-inch cover plate on the opposite end, and solder it into place.

Modify an Amphenol #75-3 microphone connector by sawing off the small-threaded end so that it is flush with the large-threaded end. Lap this cut smooth, carefully drill out the eyelet in the insulated end, and open the eyelet mounting to 1/4-inch diameter or to clear the detector diode. Carefully solder this piece on the wall of the waveguide designated for the detector diode. Make a dummy diode or use a burned out diode to align this holder square.

Now mount the copper pipe in the hole on the wide wall of the guide as shown in Fig. 1(a). Place the screws and jam nuts as shown in the drawings. Clean all solder flux from the assembly with hot water, wash them with alcohol, and dry them thoroughly.

Check all of the assembly to see that all parts are securely soldered and square with the waveguide walls. Slide the horn throat over the outside of the copper pipe now mounted on the waveguide assembly. It should look something like Photo A. Not shown is a hose clamp which holds the horn in place securely.

If you wish to build your own Gunn diode oscillator, the details are shown for this construction. It is as simple as most of the previously described plumbing. A Gunn diode, Amperex-type CXY-11-C, obtainable from North American Phillips, which costs in the vicinity of $25, is used in this assembly and is relatively low in power, but is sufficient for the job. The assembled Gunn oscillator is also shown mounted on the plumbing. Photo B shows the components required. With the assembly construction drawing and the photo, you should have no trouble constructing this.

If you wish to buy the Gunn oscillator assembly, it is available from Microwave Associates or General Electric. The units used for this purpose are usually available for police or intruder alarms and vary in price depending upon power output. If a commer-

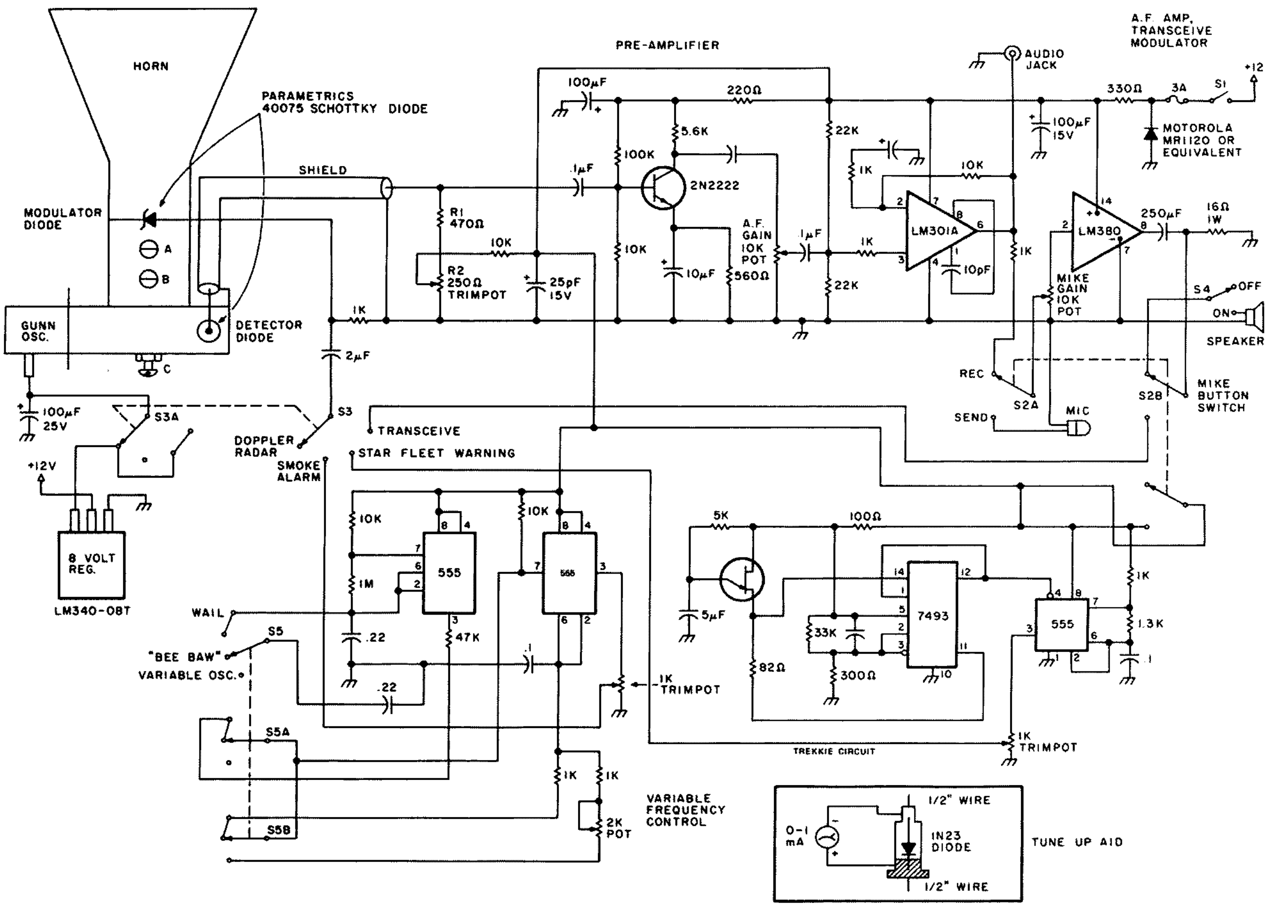

Fig. 3.

cial unit is chosen, the three-terminal regulator indicated may have to be changed to one which delivers a higher voltage. Usually a spec sheet accompanies the oscillator.

As a last resort, if a Gunn oscillator is beyond your means, a Klystron oscillator can be used. Suitable information on these tubes, as well as power supply information, is available in amateur handbooks.

The construction of a Gunn oscillator is accomplished as follows:

There are two views given for a Gunn oscillator that should occupy your attention. (See Fig. 2.) These show the top view, with a flange in place, and the end view, with the flange absent. The flange was purposely left off so that the assembly of components and mounting screws would be in view. The two screws marked A and B in this view serve an obvious double purpose. The B screw is a 4-40 x ¼-inch-long brass screw and should be set in place so that it is not protruding into the waveguide. If it does, file it until it just fills the hole and is flush with the inside of the guide. The A screw is 3/8-inch long and of the same material. It sets the frequency of the oscillator. Making it longer will lower the frequency, and, conversely, shortening it will raise it.

The insulating material for the diode coupling unit should be mylar, but other material can be substituted.

When installing the diode, mount it in the hole of the short 1-20 brass plug with the large flange of the diode on the plug. Screw the plug into place so that the other end of the diode engages the diode coupling firmly, but do not compress this $25-dollar jewel, or the diode will be destroyed by cracking. Just a firm clamp will do.

As shown in the top view, all holes should be drilled and tapped and the cover and flange attached with soft solder. For drilling and soldering, use the same techniques as described in the plumbing assembly.

The diode coupling should be turned on a lathe and should adhere to the dimensions as shown. If you are ambitious enough, you could make this unit with a screw and washers. The edge of the top section of this unit must be insulated with mylar tape. A 1-mil thickness is required. It can be obtained from a drafting supply house or perhaps from a friendly draftsman. Use another piece of the same tape over the top of the guide to insulate the top of the diode coupling from the filter plate which is gounded to the waveguide. This plate provides the other half of an rf capacitor in conjunction with the top of the diode coupling.

When all of the parts are assembled, including the diode, place the iris over the flange. Be sure the holes all align. They are drilled to fit the choke flange on the plumbing assembly and are not uniformly spaced, so there will be no possibility of crossguiding the two units.

Crossguiding will absolutely put you out of business and may even blow your diode. The microwave industry thought of this years ago, so that's why the commercial chokes and flanges are drilled this way – not because I thought of it.

So now let's get on with the tune-up procedure. I said in the beginning that all you were going to need was the tuning meter and diode shown in the drawings and an

electric fan.

Temporarily disconnect the lead that goes from the Gunn diode oscillator to the voltage regulator. Now, with the power on (12 volts), check to see that the regulator is putting out 8 volts positive. If it is, then check to see that a voltage of at least 100 millivolts dc is indicated at the junction of R1 and the detector diode. If it is lower than 100 mV, raise it by adjusting R2, the trimpot.

Next, connect a temporary lead to the junction of the connection to the mike gain pot and the lead that goes to the mike. Now you can signal trace the "bee baw" and "wail" circuits by touching the wire to the connection on switch S3, smoke alarm position. It should be very loud when the output pot of this circuit is full on and the mike gain pot is up. Now, if all is well with the alarm circuits, connect the temporary wire to the Starfleet warning position, and press the mike button. You should hear two things — the characteristic Starfleet interrogation sound and audio from the mike.

Now that these circuits have been found in working order, remove all temporary jumpers and reconnect the Gunn oscillator regulator. Place the tune-up aid in front of the horn antenna, and turn on the power. Put the function switch, S3, in the Doppler radar position. There should be an indication on the tune-up aid meter. If it is pegged, move it far enough away to get a half-scale reading. Rotate the pickup or antenna leads of this unit for maximum signal. Now adjust screw C, shown in Fig. 1(a), for a slight peak in output. It will be discernible, but it will require care to see it. Now place the electric fan or muffin fan in front of the horn, about four feet away from it, and turn it on. That's a low-frequency Doppler from the blades you hear. Now loosen the hose clamp that holds the horn in place, and slide the horn back and forth on the 3/4" pipe until you find the peak signal, which will also be very slight and quite broad. Clamp the horn in place when this is found, and adjust screws A and B alternately. For the greatest signal strength, you will probably have to move the fan further away.

If you can connect a VOM to the output of the LM380 and put it on an ac scale, you can adjust these screws more accurately than by ear. Adjust the two screws until no further increase in signal can be detected, and then adjust the trimpot, R2, for a further indication of increase in signal. This adjustment is very broad. Finally, readjust screw C for an increase in signal. That completes all adjustments. You probably can hear the fan at quite a distance from the horn. In fact, you should be able to detect your own movements around the horn as very low frequency sounds, dependent upon the speed at which you move around. If you have a tuning fork, strike it and hold it up to the horn, and you will be able to hear it. Or take the whole works outside, and see what automotive Dopplers sound like.

With the tune-up complete, there are no further instructions, except to say that, in the communication mode, don't expect to hear signals like on seventy-five in a contest. I'll hold skeds on 10.499 MHz on the fifth Thursday of any month at 0001 GMT. So listen for me there.

All of the other options, of course, will give you something to think about. But consider this, too — slow down, and we can keep our sked on the air, and you won't end up a silent key. ■

References

1. Stirling M. Olberg W1SNN, "Mobile Smokey Detector," *73 Magazine*, Holiday, 1976.
2. Marc I. Leavey WA3AJR, "Trekkies, Build this Starfleet Communicator," *73 Magazine*, February, 1976.

Robert E. Bloom W6YUY
8622 Rubio Ave.
Sepulveda CA 91343

In Search Of the Ultimate

—an incredible counter calibrator

Wouldn't it be exciting if it were possible to have all of the following in one simple small package?

1. The maximum readout accuracy a frequency counter or reference oscillator design will permit.
2. A calibration device so simple that it requires only a level set control, a momentary switch, and two BNC coax connectors on its panel.
3. A compact package, all solid state, and no warm-up time required.
4. The cost of building under $60.00, if everything is purchased off the parts house shelf (under $25.00, if you know where to shop).
5. Fast calibration, once the counter or reference standard to be calibrated has reached stability.
6. Fun and excitement for both operator and spectators while in the process of calibration.
7. Accuracy as great as one part in 10^{-11} (if the counter could only have this kind of stability!).

The only other equipment required is a family color TV set.

A wild dream? Not at all. I have been using such a device for over a year now, and, in addition to the above features, it beats the long, drawn-out WWVB methods used by calibration (metrology) laboratories throughout the country. This long-awaited method is called the color bar calibration method. See my article in the April, 1976, issue of *73*, "How Accurate is Your Counter — Really?" Once you possess this device, calibrating your counter timebase reference oscillator or other reference standard becomes as exciting as using the instrument for its intended purpose.

The method to be described has been developed by Dick Davis of the National Bureau of Standards, and additional information relating to frequency measurement methods can be obtained by writing their Time and Frequency Services Section.

Let's start with a little of the history behind the development of the system. As you are aware, our government has been transmitting standard radio frequencies over both marine (Navy) and NBS stations. Just NBS alone has had over 10 stations on harmonically-related HF frequencies in Hawaii and Fort Collins, Colorado, namely WWV, WWVH.

The accuracy at the point of transmission has been a few parts in 10^{-9}. The accuracy at the point of reception could be as poor as one part in 10^{-7}, depending on season, time of day, and the effect of the Doppler shift. Most commercial users require a much higher accuracy level than these stations now afford and have been using the NBS VLF transmissions of WWVB and WWVL. The WWV stations transmit other information in addition to time and frequency, while the low-frequency stations radiate only frequency information.

The cost to maintain all of these transmitters, however, has reached astronomical proportions. About two years ago, NBS sent out a questionnaire to users asking what impact would be created by shutting down some of the transmissions and/or possibly closing some of the stations. The employees at NBS are not only dedicated to their work but are also quite efficient, so they do not just send out questionnaires and sit back awaiting answers which could result in shutting down some of these services. They developed, instead, a new method that is efficient, highly accurate, and available to anyone owning or having access to a color TV set.

NBS consulted with the heads of the four broadcast networks (NBC, CBS, ABC, and PBS), suggesting that they could provide a public service by precisely controlling the frequency of their TV color burst. This would require a modest one-time expenditure. The networks obliged by purchasing rubidium signal sources so modified that they included a synthesizer to generate a 3.579545454··· MHz signal to generate their color-burst subcarrier. The rubidium frequency oscillators have accuracy beyond one part in a hundred billion, but are offset from the exact frequency by about -3000 parts in 10^{11}. NBS would provide a daily computer readout of the frequency offset required by the networks as compared with the nation's primary standard.

The NBS standard is a siesium beam atomic oscillator which has a frequency accuracy of better than one part in 10^{13}. From April through June, 1976, the exact value for UTC time was within -0.6 x 10^{13} or less than one part in 10 trillion. The WWVL transmissions of this frequency also have an offset to compensate for the nonuniform variations in the rotation of the Earth on its axis.

With that out of the way, you should be moderately excited, at least. But first the question is, "How does this accuracy manifest itself in my color TV set?" All color television receivers lock onto the color subcarrier signal, and, if the color set is tuned to a network program, its internal 3.58 MHz oscillator generates a replica of the atomic oscillator signal back at the network studio. This 3.58 MHz

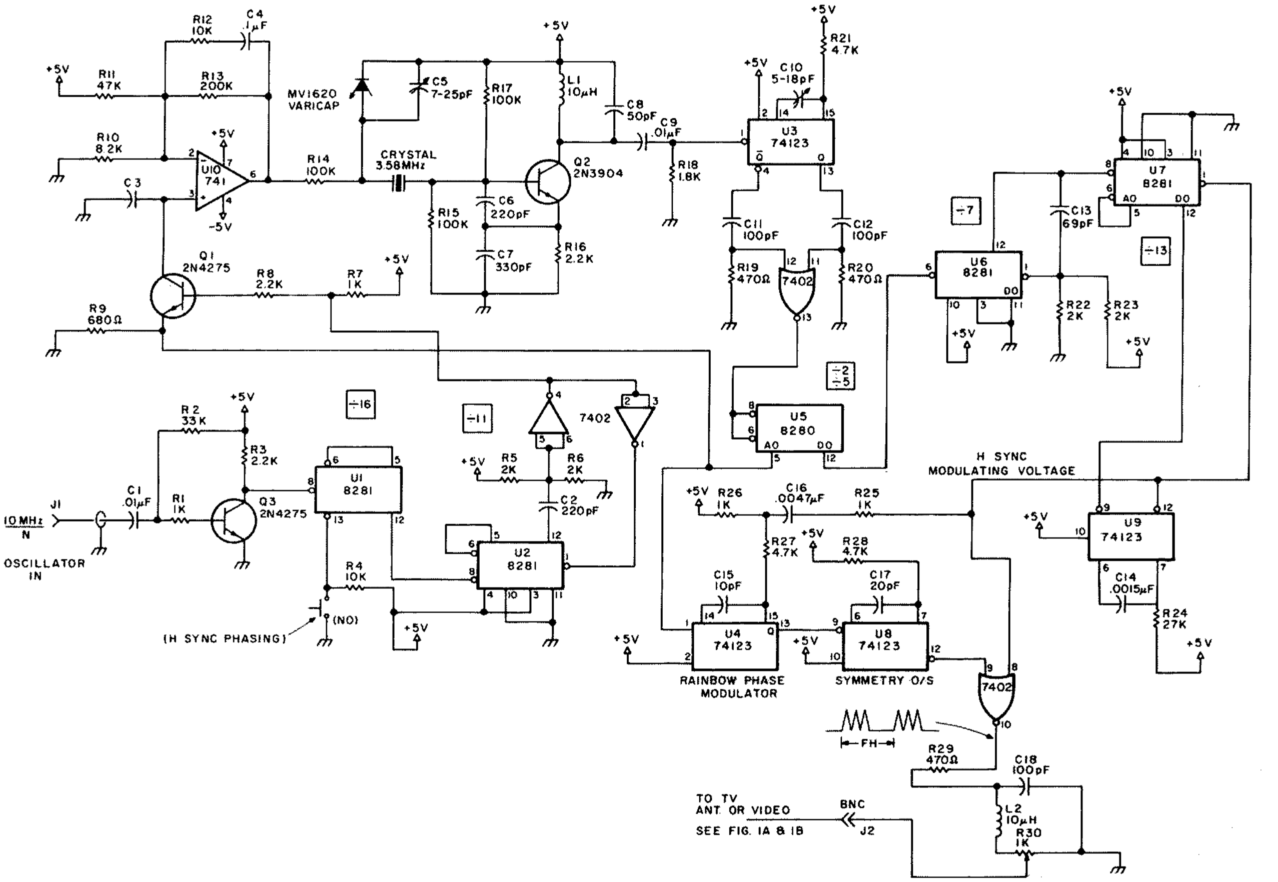

Fig. 1. Schematic diagram of the color bar calibrator. Note: Place .01 to .05 mF disc ceramics freely at B+ points and at 5 V dc at ICs. 8280 is equivalent to 74176. 8281 is equivalent to 74177. The 4-section 7402 is used for gating and inverting.

signal from the color receiver is not a substitute for the oscillator in the frequency counter. It is a calibrating signal that can be used to set the oscillator. In only 15 minutes, one can match the results of days of data gathered from the NBS radio stations WWVL or WWVB.

In order to interface the counter oscillator with the TV set, a small box will have to be built (see Figs. 1 and 3) containing 12 inexpensive ICs, a one-dollar color TV quartz crystal, 3 cheapie transistors, and a few other simple components. This small box is called a color bar generator. All of its components fit on a 4" x 7" PC board.

Essentially, this box takes the 3.579545454 MHz network signal and phase-compares it with the 1.0 MHz, 5.0 MHz, 10.0 MHz, etc., frequency standard or crystal timebase you have in your ham shack.

An article by WD8ASL in the Feb., 1977, issue of *73* describes a method for reading out the TV receiver's 3.5795454 iocked-on crystal oscillator. This method will provide limited accuracy, depending upon the length of the counter's timebase. I suggest reading the article. It does not provide the ultimate accuracy but is an excellent method nevertheless. For those requiring long-term accuracy using phase comparison of the timebase, the color bar phase comparison will provide this accuracy.

The block diagram in Fig. 2 illustrates one of two ways the equipment is interfaced with the TV set. Basically, the color bar generator produces a wide vertical bar on the face of the picture tube simultaneous with receiving a network telecast.

With the crystal timebase oscillator of the counter coupled into the color bar generator, the bar generator's level control is adjusted for a comfortable bar presentation level. The bar will be moving horizontally across the face of the TV screen. If moving to the right, the counter oscillator frequency is high; to the left, it is low. Adjusting the counter crystal frequency in the proper direction will slow the horizontal movement of the bar until it stops moving. Pressing the momentary switch on the color bar generator positions the bar on the screen. Just keep pushing until the bar positions itself where you want it. Now,

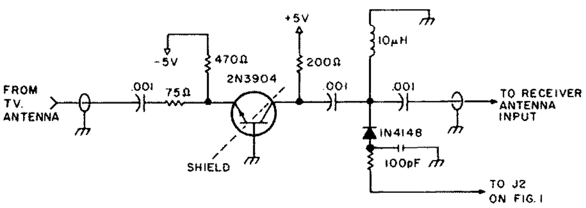

Fig. 1(a).

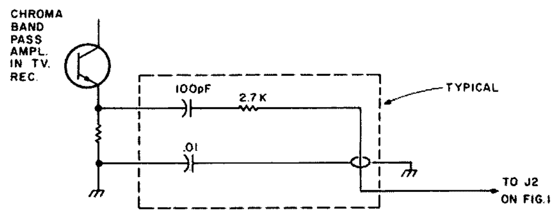

Fig. 1(b).

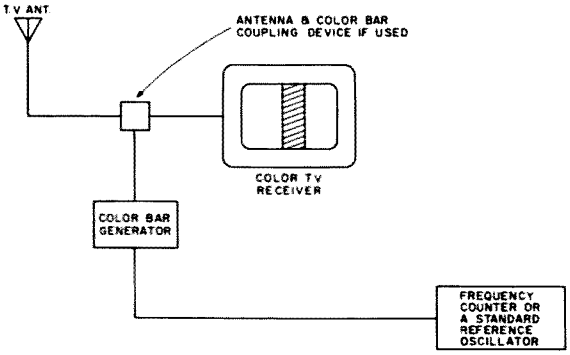

Fig. 2.

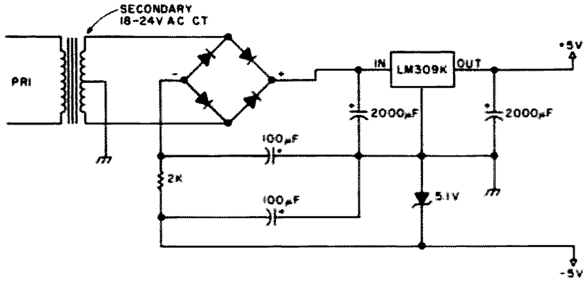

Fig. 3.

going back to the counter's crystal frequency adjustment, further corrections of the frequency will cause the spectrum of colors to roll through the bar presentation. If the colors are rolling from left to right through the bar, then the frequency of the oscillator is on the high side; if moving to the left, the converse is true.

When the colors are moving slowly through the bar, the frequencies or divisions thereof are on the same frequency, but not in phase with one another. (The frequency of the counter timebase is already much closer than one could ever adjust it by any aural beat frequency method.) Further adjustments in phase are necessary in an attempt to cause the rolling of colors to slow even further. When a single color can be retained for about 7 seconds, the timebase accuracy has parts measurable in 10^{-8}. If a single color can be retained for about 15 minutes, then you have attained a crystal timebase stability measured in parts in 10^{11}. One thing to remember is that, if the crystal oscillator and associated circuitry does not have this inherent stability, then it will never be attained no matter how long a warm-up period is given the counter. However, one thing is certain: This system will squeeze out every bit of accuracy of which the counter is capable. Now that you know what this device does, and if you have the appreciation of this advancement in the state of the art of frequency technology, your adrenalin should be running at top speed.

As stated earlier, the illustration in Fig. 2 shows how to interface the equipment by going into the antenna system of the TV set. This method has at least one drawback. Coupling the signal through the TV antenna causes the signal to pass through more of the TV circuitry than is needed, thus producing a visual beat note. This shows up on the TV screen as an annoyance.

A second method uses only the video circuits needed, eliminating this beat note. This method requires getting into the inside of the set and adding a small coupling capacitor, a length of RG-174 50Ω coax, and a BNC connector. Essentially, you must tap into the TV chrominance bandpass amplifier stage. I did this and know many hams who have. It in no way degrades the normal operation of the TV set. If you have the technical competence to expose the innards of your TV set, mother, father, or spouse willing, then it is recommended you do so. Otherwise, the antenna input method will suffice.

What makes the color bar generator work is best illustrated by the schematic in Fig. 1. Let's see just how this thing takes an odd frequency like 3.57954545 and makes it harmonically related to a 10 MHz crystal and/or any submultiple, that is, 10 MHz divided by N where N = 1, 2, 3, up to 100. This allows one to compare frequency sources of many frequencies.

The crystal oscillator used in the frequency counter as a timebase reference or, for that matter, any oscillator used as a reference frequency standard, is fed into the J1 input to Q3. The signal is divided by 16 and then by 11, for a total of 176, and drives the base of Q1, which is a phase locked loop comparator.

The 741 operational amplifier (connected as an RC integrator) drives a voltage-controlled crystal oscillator operating at the color subcarrier frequency of 3.58 MHz. The other input to the comparator comes to the Q1 emitter from the loop output circuit. The output from the VXCO drives a 74123 one-shot circuit for pulse-shaping of the oscillator output.

Two signals are taken from the one-shot, and the positive-going transitions are coupled through a 7402 NOR frequency doubler, the output of which is fed into the inputs of a 8280/74176. Part of this signal is divided by two and fed back to Q1 for phase lock.

The result of phase lock is that you have a crystal-controlled oscillator operating at the subcarrier frequency phase locked to a local standard. This permits you to inject a signal into a television receiver and compare it to a network color subcarrier. The second part of the injected signal to the 8280/74177 binary counters is further divided by 7 and 13, providing a total division of 455. The resultant frequency of 15,734,265 Hz is equal to the horizontal oscillator signal of the color TV receiver. This will produce a stationary vertical bar on the TV screen. This horizontal rate signal is used, with the output of the modulator, to drive the receiver. The block diagram of Fig. 2 shows the signal being interfaced through the antenna terminals of the TV receiver. Using this method requires the addition of a single transistor circuit and a pair of terminals to accept the TV antenna. This additional circuitry connects between the TV antenna and the antenna terminals on the TV receiver. See schematic 1(a).

The second method does not require removing the antenna from the receiver and placing it onto the bar generator, but does require obtaining a schematic of the receiver so that a point in the chrominance bandpass circuit can be located. A typical chroma interface is shown in schematic 1(b). Dick Davis of NBS was quite helpful in providing information on my 12" Sony.

Fig. 4 may be helpful in making up a printed circuit board. I do not have any boards available at this time. (If the demand is heavy enough, I may provide quality G-10 epoxy boards for a nominal amount.)

A 15 MHz oscilloscope will be helpful in determining that all of the ICs are operating and dividing properly. There is only one circuit in the unit that requires tuning, and that is the 3.58 MHz crystal stage; C10 requires adjusting to produce doubling of the frequency at pin 13 of the 7402 IC. Check pins 4 and 13 of U3 for equal ampli-

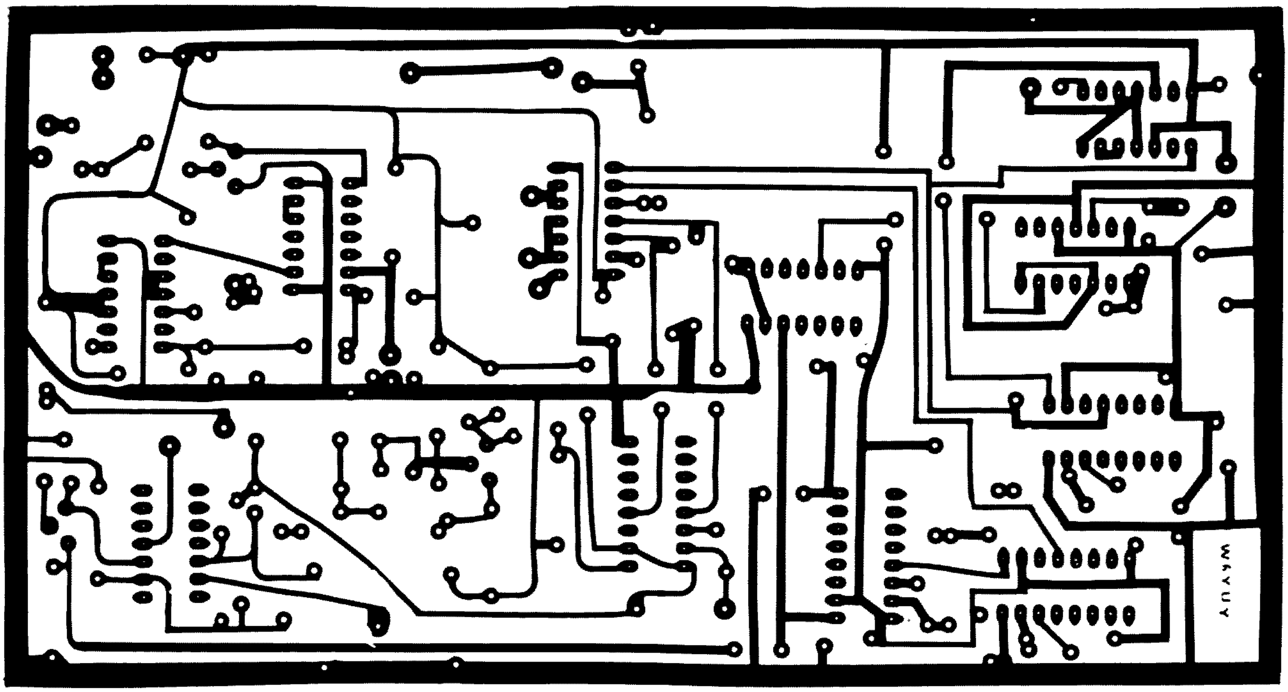

Fig. 4(a). PC board.

tude signal. Now connect the color bar generator to the TV set, tune in a color program, preferably a network program but not absolutely necessarily at this point, and adjust the level control R1 for an acceptable presentation of the vertical rainbow color bar on the screen. Adjust the 7-25 pF C1 crystal trimmer capacitor until the movement of the bar slows sufficiently. This will place the crystal frequency so that it is within range of the 741 op amp voltage swing and so that the varicap can lock the crystal on frequency when the local frequency standard approaches phase resonance.

A VTVM at pin 6 of the 741 op amp is another good test point. Variations of C1 will cause changes at pin 6. When everything is working properly, the device for calibrating the frequency standard is ready to be used.

Everything is now ready for that very exciting moment, except for an extended period of warm-up time for the local standard. This period depends upon how accurate a calibration one is looking for. Obviously, if you are seeking the ultimate, then it is recommended that the oscillator, once turned on, remain on indefinitely. For a starter, I would suggest a 24-hour warm-up be considered as minimum. Then start a program of measuring the frequency every 24 hours, preferably at the same time each day. The stability will be erratic for about a week. If a careful record is kept, you will note that this stability will improve over the next 90 days, when it will settle out with a predictable aging rate thereafter. So there is no misconception at this point, it should be understood that, if the standard oscillator is one of mediocre quality (has no oven, not a low drift crystal cut, etc.), then one cannot expect accuracy of better than perhaps parts in 10^{-7} or worse. In this case, the unit should be warmed up for a period of 5 to 24 hours, calibrated as best you can, and used as soon thereafter as possible. If the crystal has an oven, the expected accuracy will be better. The quality of the crystal and the oven are of major consideration.

There are other causes for error. First, you must be certain that there is a network program or that the local outlet stabilizes its color burst using a rubidium standard. Also, note that some network programs are taped and then transmitted over the local station at a later time. Furthermore, at times between programming, the control is returned to the local station for commercial broadcasts and identification. Finally, there are momentary jumps in phase as great as ±70 nanoseconds that are produced when switching from one video tape machine to another with different lengths of cable in the path. There is also the multipath distortion between the local station and the receiver.

There is, however, another point that you must be aware of when calibrating for parts in 10^{11} accuracy. That is that the network rubidium broadcasts are slightly offset from the NBS standard frequency, and these offsets vary a small amount between networks and east and west coasts. These offsets are around minus 3000 parts in 10^{11} (-3000×10^{-11}). The exact offset is measured by the NBS and published monthly in their *Time and Frequency* bulletin. This publication can be obtained free by writing the Time and Frequency Services Section, NBS, Boulder CO 80302.

How to Measure the Frequency Offset

Those who have an extremely stable frequency source with a potentially high capability of accuracy may be interested in compensating for this offset. Frequency offset can be measured by calculating the accumulated phase differences between two signals. In the above case, where the subcarrier has an offset of -3000×10^{-11}, take the time, T (period of the beat note), required to accumulate one cycle of phase difference (Δt) at 3.58 MHz. Use $\Delta t = 1/f = 1/(3.5795 \times 10^6) = 27936 \times 10^{-11}$ seconds.

Offset = $\Delta t/T$ = (How much it moves)/(How long it takes) = (1 period of 3.58)/(1 period of beat note). The known offset for the TV networks is normally -3000×10^{-11}, so solve for T = Δt/offset = $27936 \times 10^{-11}/3000 \times 10^{-11} = 9.31$ seconds as the period of the beat note. This means that the network subcarrier oscil-

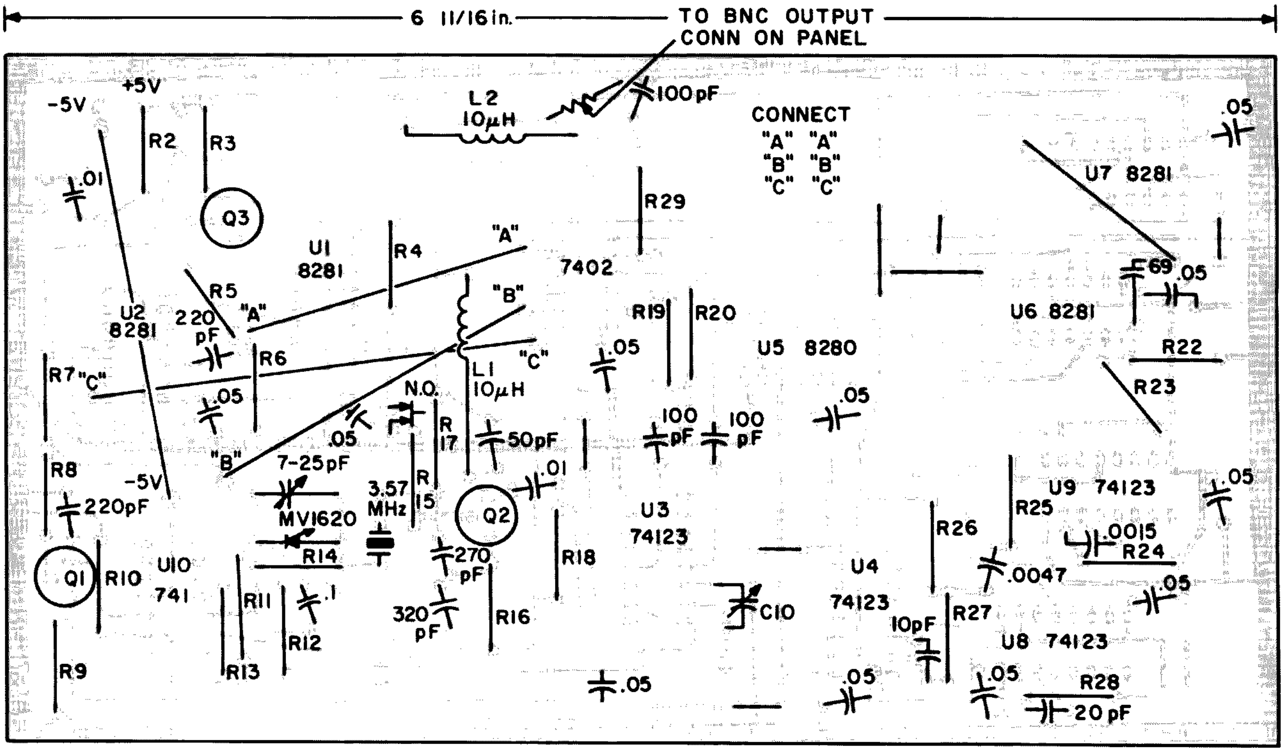

Fig. 4(b). Component layout (shown from foil side).

lator of 3.58 MHz would lose one cycle with respect to an NBS zero offset 3.58 MHz oscillator in 9.31 seconds.

Let's pull all the loose ends in now and review. You have two options for interfacing the oscillator you wish to calibrate and the network rubidium signal into your TV set – the antenna interface and the video interface. No matter how you get these signals into the receiver, they will be processed just as though they were a normal picture. The beat of the local crystal oscillator with the network signal forms a vertical "rainbow" bar. The color of the bar changes with respect to the network rubidium. Your job then becomes one of using a stopwatch to measure how long it takes this color change to occur. The stopwatch reading is equal to the period of the beat note.

To calibrate the crystal oscillator, tune in a network broadcast, and set the oscillator to be calibrated so that the rainbow appears to move across the bar from right to left in about 10 seconds. If the frequency of the oscillator is far off, the colors in the rainbow pattern will change rapidly and the entire bar will move in the direction of the color changes. The bar can be positioned to the middle of the screen by the push-button labeled "horizontal sync phasing." With the rainbow repeating colors in about 10 seconds, carefully adjust the crystal oscillator until the period is $T = 27936 \times 10^{-11}$/NBS published offset for the network being viewed. The result is a calibration with traceability to NBS.

Conclusion

For the previously discussed formula of $T = \Delta t/\text{offset} = 9.31$ seconds for the period of the beat note, it is recommended that one make the measurements over 10 beat-note periods. If they are taken over only one beat-note period, the effect of reaction time with the stopwatch will be reduced. For example, if, for a one-period measurement, an error of 0.3 seconds corresponds to a frequency error of 100 parts in 10^{11}, for ten periods, a measurement error of 0.03 seconds results in a frequency error of 10 parts in 10^{11}.

It has been observed that there is a general tendency among some amateurs who do not often come into contact with precision measurements to interchange such words as accuracy, tolerance, stability, resolution, and possibly a few others. It therefore seems appropriate to include a glossary of definitions.

Standards – Reference standards, as opposed to house standards, local standards, and working standards, are often called a transfer standard and are the standard used to convey frequency or time from the house standard to the working standard. The house standard may itself be considered a reference standard. The local standard is local in the sense that it is not a national standard, hence it may be a house standard or a reference standard or a working standard.

Time interval measurements – This means counting a frequency over an extended time period in order to average out short time anomalies. An example is measuring a one-second time readout counted over for a period of 10 seconds. At high frequencies, the error is small in either case. However, this method of measurement becomes important at low frequencies, for example, measurement of a 60 Hz line current frequency by the time interval or averaging method when fed directly into a counter using a one-second count rate or at a ten-second time interval rate. Counters have a plus or minus one count accuracy. Therefore, you can only read to a resolution of 1.0 Hz, whereas, if the period of measurements is 10 seconds, the accuracy improves to within 0.1 Hz.

Aging rate – This is the frequency drift rate of a well-designed quartz crystal, once the crystal and oscillator have reached stability. Commonly, a high quality A-T-cut crystal, well-protected against operating temperature variations, reaches a drift or aging rate of 5 parts in 10^{10} per day. This usually requires an initial operating time of 90 days.

Frequency offset — Fractional frequency offset is the amount by which a frequency lies above or below reference frequency. For example, if a frequency measures 1,000,001 MHz when compared against a reference of 1,000,000 MHz, then its fractional frequency offset is 1.0 Hz/MHz or one part in 10^6.
Phase anomaly — A sudden irregularity in the phase of a low-frequency or very high-frequency transmission.
Phase noise — A measure of the random phase instability of a signal.
Doppler effect (also called scatter) — Propagation delay time of a high-frequency radio transmission. This equates the great circle distance between the transmitter and receiving points, the number of Earth-to-ionosphere reflections during the transmission path, and the vertical height of the ionospheric reflection layers.
Frequency accuracy — The degree to which the measured or calculated value conforms to the accepted standard or rule.
Tolerance — The permissible deviation in the fineness, or between a pair of numbers of a measurement, owing to the difficulty of securing the exact conformity to the standard prescribed, for example, 100 kHz ± 0.1 Hz, or, as another example, the NBS in calibrating a 10 dB fixed attenuator. A reference standard which a manufacturer submitted for calibration against one of 10-times-greater accuracy (a magnitude better accuracy) may receive a certificate of certification stating that, at a given frequency on a given date under certain environmental conditions, the measured value was 10.05 dB ± 0.1 dB ± 1.0%. The tolerance of the measurement was within 0.1 dB with uncertainties of 1.0%.
Stability, short- and long-term — One of the most important characteristics of frequency and time standards. Long-term stability or long-term instability refers to the low changes in average frequency with time arising from changes in the resonator or other elements of an oscillator. Statements of long-term stability for quartz oscillators often term this characteristic aging rate and specify it as "parts per day" fractional frequency change over 24 hours.

Short-term stability or instability is an expression of the change in average frequency over a time sufficiently short (but exceeding some minimum time) that long-term effects are of small significance. A typical statement for an ultra-precise quartz oscillator would be, "Fractional frequency deviation is one part in 10^{11} for 0.1 second averaging time and is 5 parts in 10^{11} per day."
Precision, reproducibility, resettability — All imply the existence of an observation consisting of a series of readings taken in a prescribed manner. Precision is a quality of sharpness of definitions. It also incorporates the random error of a reading. Reproducibility is a sequence of comparisons (as an instrument against a standard) which will yield a mean and a standard deviation. The latter may be called the reproducibility of the instrument. Use of this term implies that the instrument was independently adjusted between measurements, so the resettability of the instrument is a factor.
Error — The difference between the true value and an observed or calculated one.
Uncertainty — That value remaining once the error has been corrected. ■

References

1. *New Frequency Calibration Service of the National Bureau of Standards* by Dick Davis.
2. *Frequency and Time Standards*, Hewlett-Packard Application Notes #52.
3. "How Accurate Is Your Counter — Really?", Bob Bloom W6YUY, April, 1976, *73 Magazine*.

Super Deluxing the TR-33

—build this synthesizer

Joe Moell WA6JFP
Box 20-GJ
Fullerton CA 92633

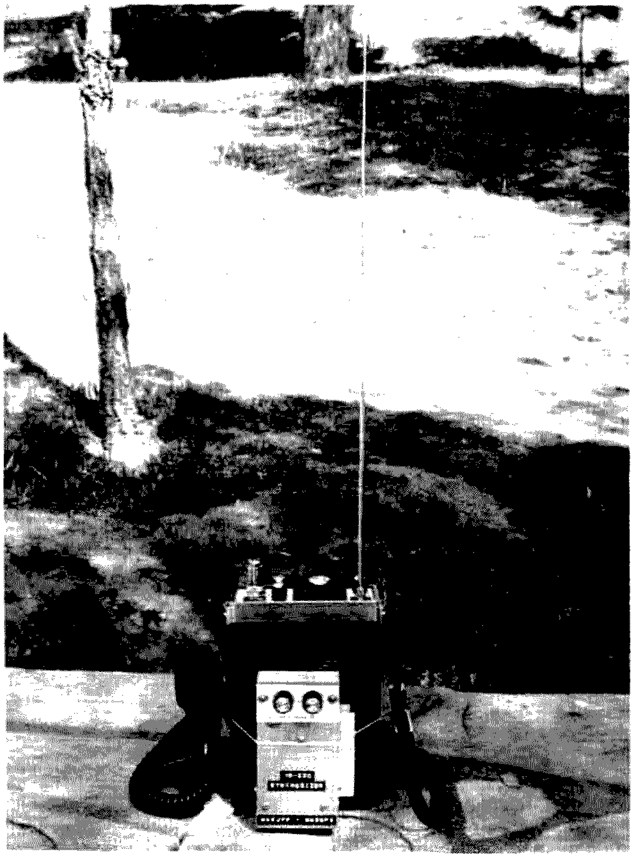

The Drake TR-33C is a real money-saver when it comes to buying crystals because one rock gives transmit and receive on a standard repeater pair plus simplex on that repeater output frequency. If you're like me, however, you still don't like to wait 3 weeks for a crystal to get on a new machine or be out in the cold when your favorite repeater changes frequency. This happens a lot in southern California, and, out here, having only 12 channels can be a real limitation, too.

Why not synthesize the TR-33? It's a great idea, since only one frequency needs to be generated. But the published synthesizer circuits seem to all use lots of TTL, which eats up precious battery power.

The answer is CMOS logic and a loop circuit originally designed for the HT-220 by Dale Heatherington WA4DSY.[1] The HT-220 requires that both transmit and receive frequencies be generated, and Dale's circuit achieves this with offset oscillators and T/R switching circuits that use three extra crystals and five extra transistors. The TR-33's built-in offsets eliminate the need for all those parts and result in a synthesizer circuit with two crystals, 3 ICs, 7 transistors, and miscellaneous small parts. Any 5 kHz-spaced channel between 146.000 and 147.995 can be selected. Tune-up is simple, since there is only one tuned circuit. If your junk box can provide the resistors, capacitors, and bipolar transistors, you can synthesize your TR-33 for about 40 dollars. And, since only one frequency is generated, the synthesizer can be hooked to the rig with just one coax line for both power and rf. Spurs on this line measured -53 dB or better. Battery drain is a measly 25 mA.

How It Works

The frequency to be generated is given by the formula $F_S = F_O - 10.7\ \text{MHz}/9$, and Fig. 1, the schematic, shows how this occurs. The reference frequency is 5 kHz divided by 9, or 555.555555 Hz, generated by dividing a 9.102222 MHz crystal oscillator output by 16384. The

vco output at F_S is buffered by Q5 and Q7, and a sample is mixed with the 14.3666 MHz offset frequency at Q6. The difference is applied to U1, a programmable divider which is set by the frequency-select switches to divide by a number between 1200 and 1599. U1's output, at 555.555555 Hz, is compared to the reference frequency by the phase detector in U2, a CMOS PLL chip. The phase detector output is filtered and controls the frequency of the vco via varicap D2, closing the loop. Regulator transistor Q1 supplies 10 V to all circuitry from the TR-33's 12 V batteries or any external source powering the rig.

Construction

Dale built his synthesizer on a 2¼ x 4¼-inch board which fit inside his HT in place of the optional PL board for that rig. If you're a miniaturization nut with tiny fingers, I bet you could fit my circuit somewhere inside the TR-33C on a board about 2/3 the size of Dale's, although it wouldn't be easy. I may try it myself someday, but I don't like the idea of using a BCD-coded DIP switch to enter the frequency, which seems to be the only way to do it if it's built in. Besides, I was in a hurry to get it on the air, so I ordered a board from WA4DSY, slapped in just the required parts, stuffed it all in a 5½ x 3 x 1¼-inch aluminum box, and it worked right away.[2] I suggest you do the same, since the board is top quality, fully drilled with plated-through holes, and makes for a neat unit about

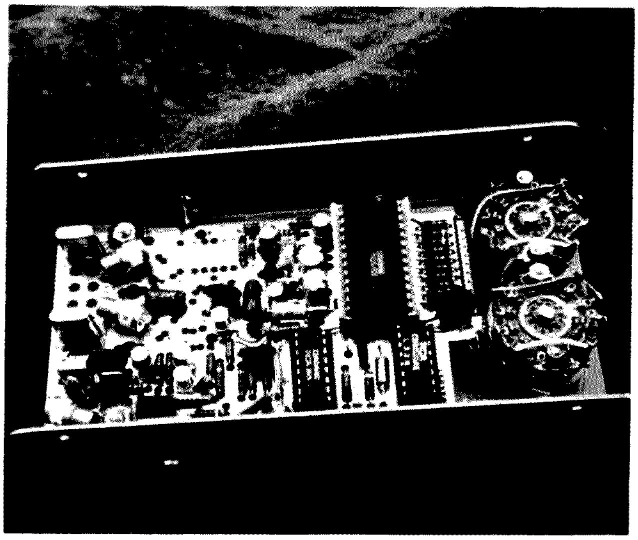

the size of your calculator with plenty of room for rotary or thumbwheel switches. Along with the board you also get tune-up information, including key waveform photos which are applicable to this use.

It's a good idea to use sockets on the ICs — the low-profile kind work well with the plated-through holes

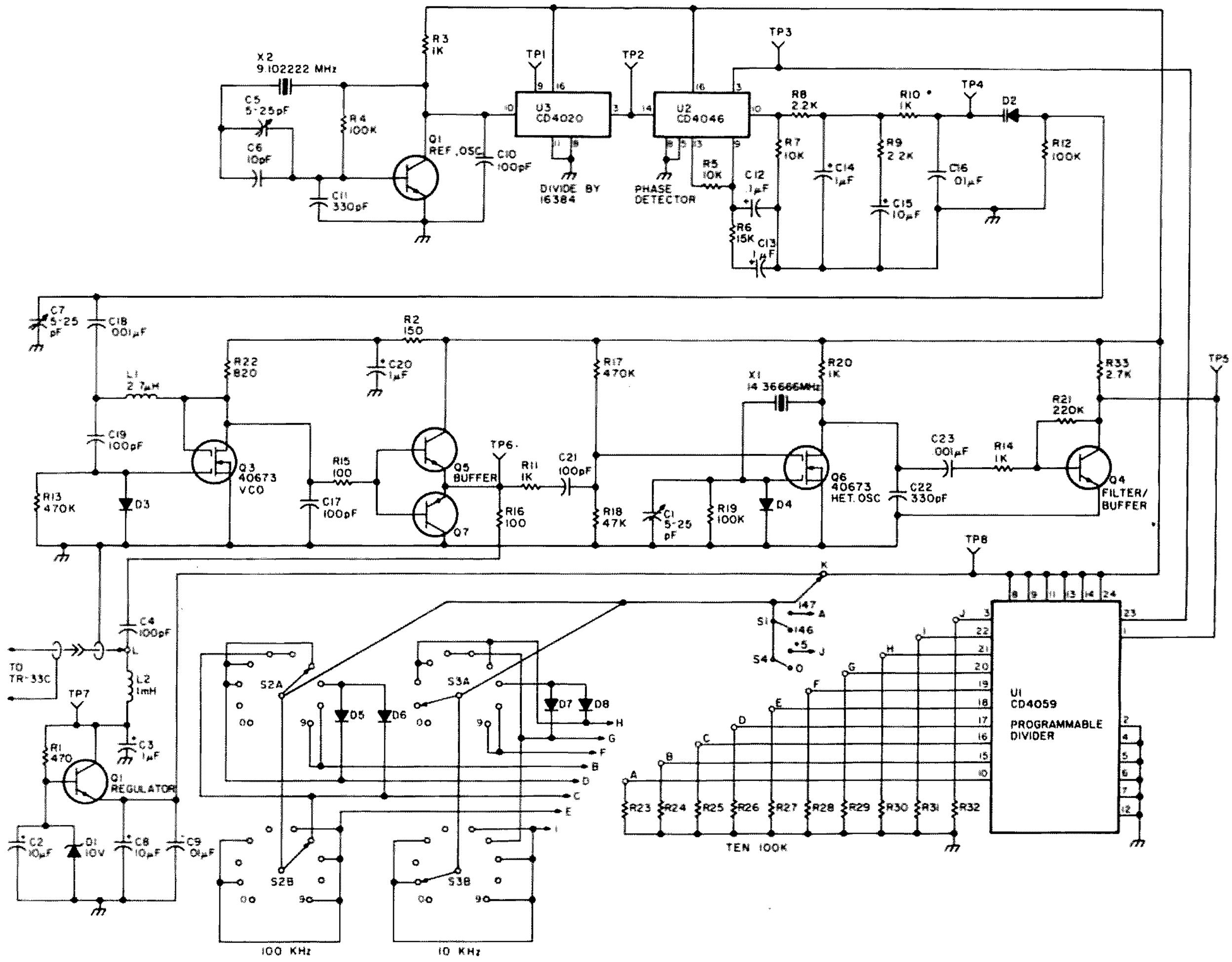

Fig. 1. Schematic of the TR-33C synthesizer.

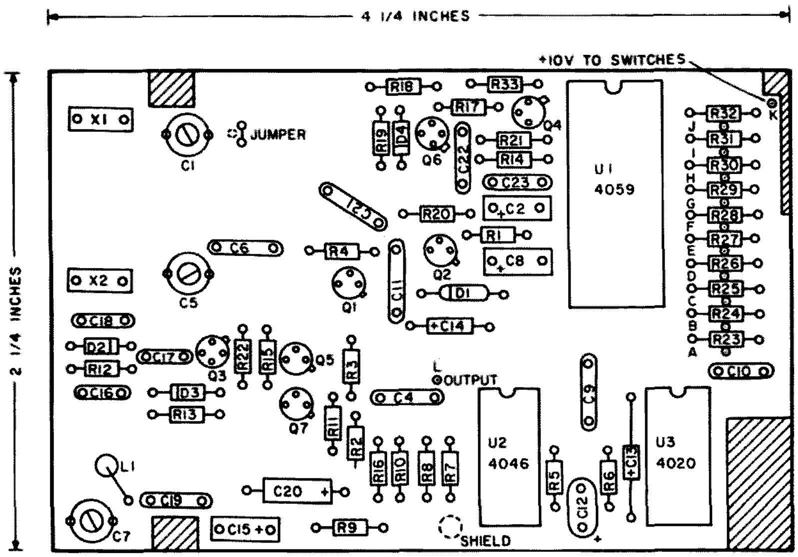

Fig. 2. The WA6JFP synthesizer as constructed on the WA4DSY board. L2 and C3 are not shown, as they mount underneath the board where it's convenient.

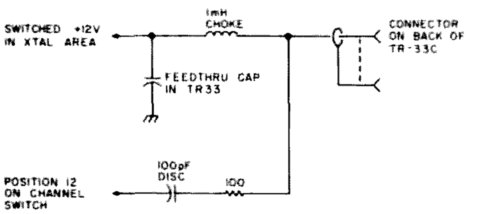

Fig. 3. Connections inside the TR-33C.

on this board. Troubleshooting is easier if you can break the loop by pulling an IC. You may also have to try more than one CD4020 to find one that works with the 9 MHz input. WA4DSY noted that Motorola's 4020 worked better than RCA's, but I found just the exact opposite in my case. The batch makes a difference, I guess. I haven't tried Fairchild's 4020, but Dale says they worked.

Fig. 2 shows parts placement on the WA4DSY board. First put one end each of ten 3-inch wires into the eyelets on the rear of the board for the leads to the selector switches (A through J) and solder to the etch on top of the board. The remaining components and wires mount from the top, are soldered in on the bottom, and can be installed in any order. L1 is mounted vertically through the hole provided and should be glued down to keep vibration from modulating the vco. L2 and C3 are mounted last, underneath the board point-to-point. You'll save time in aligning and testing if you solder in little wire loops for test points at the TP locations marked on the schematic.

BCD-coded thumbwheel switches would be ideal for entering frequency if you can find them, but two rotary and two toggle switches will work just as well. The schematic shows how two-pole rotary switches are wired in. C1, C5, and C7 were intended to be Erie 518-series ceramic trimmers, but some subminiature surplus piston types can be made to fit.

A single coax cable connects the synthesizer to the rig. The extra unused miniature phone jack (marked TONE IN) should be removed, and an appropriate coax receptacle substituted. I used a surplus subminiature screw-on microwave connector, but a single-hole mount RCA phono jack should work just as well, if the hole is drilled out slightly.

Fig. 3 shows the additional coax and components in the TR-33C. There should be plenty of room in the crystal compartment, even if there are already 11 rocks in the rig. The synthesizer is hooked to position 12 on the selector switch after the 12th crystal (if you had 12) is removed. A feedthrough capacitor in the crystal compartment will provide switched +12 volts. To use the unit, turn the selector switch to 12. The other crystal positions are available as before, and the unit can be unplugged when you're operating rock-bound. I'd recommend this not only to reduce battery drain somewhat, but also to avoid the funny birdies caused by rf from the synthesizer coupling to the crystal oscillator in the compartment.

Tune-up and Testing

All testing can be done before the unit is hooked up to your Drake. First, beg, borrow, or build a counter and a VTVM or FETVM to use in aligning the unit. Connect the counter to TP1 through a 20 pF capacitor. Apply +12 V to TP7, and verify +10 V on TP8. Now adjust C5 for 4.551111 MHz on the counter. Verify that the 555.555 MHz reference is present at TP2. If nothing is present at TP1 or TP2, try another 4020.

Set the frequency-select switches for 147.000. Connect the VTVM to TP4, the vco control voltage, and adjust C7 for a +5 V reading. Remove the VTVM probe, and connect the counter to TP6, the vco output. Adjust C1 for 15.144444 MHz. Now hook it up to your TR-33C, and enjoy snooping on repeater inputs and checking out those oddball simplex channels while carrying the rig on your shoulder. ■

Parts List

All resistors are ¼ Watt, 5%.
Electrolytic capacitors are subminiature tantalum types with radial or axial leads as shown on parts placement drawing. All other capacitors are small disc ceramics.

L1	2.7 uH choke, 40 turns #36 wire on a ½ Watt resistor body (1 meg or greater)
L2	1 mH choke
D1	1N5530 or other 10 volt, 400 mW zener
D2	1N5144 or other 22 pF at 4 V tuning diode

All other diodes are 1N4148, 1N914, etc.

Q3, Q6	40673 dual-gate MOSFET

All bipolar transistors are fast-switching silicon types. NPNs may be 2N2222, 2N4401, or MPS3704. PNPs may be 2N2907, 2N4403, or MPS3703.

U1	CD4059AE (RCA), $7.95 from Tri-Tek
U2	CD4046AE (RCA), $3.00 from several suppliers
U3	CD4020AE (RCA), $1.00 from several suppliers
X1	14.36666 MHz high-accuracy, .002%, 20 pF, HC-18/U fundamental type from International Crystal
X2	9.10222 MHz high-accuracy, .002%, 20 pF, HC-18/U fundamental type from International Crystal

References

1. *CQ Magazine*, February, 1977, p. 52.
2. Board and HT-220 write-up are $15.00 postpaid from Dale Heatherington WA4DSY, 3126 Flamingo Drive, Decatur GA 30033.

Henry Olson W6GXN
P.O. Box 339
Menlo Park CA 94025

Feeding a Hungry Microcomputer

—power supplies

The microprocessor is a wondrous device, and, with its other associated ICs, it can do things of logical complexity that were unimagined by the tube-circuitry users of several decades ago. While most modern digital ICs are frugal in power consumption, compared to tubes in similar service, the sheer scale of a microcomputer often puts its power consumption up into the hundreds-of-Watts category. A look into almost any of the hobby computers will reveal a power transformer that would rival in size that found in an early tube-type TV set. This is not surprising, since, for any given set of transformer basic materials, the volume of a 60 Hz transformer is directly related to its power-handling capability.

Let us look at power supplies in general and also in particular as they are used in microcomputers. A power supply generally consists of roughly four blocks, as shown in Fig. 1. The transformer has the duty of reducing the line voltage (120 V ac, 60 Hz or 240 V ac, 50 Hz) to some lower voltage that is compatible with the solid state circuitry. It also could step voltage up to be more compatible with tube or other high-voltage components, but you'll be mostly concerned with low-voltage supplies in microcomputers. The power transformer usually steps the line voltage down to an ac voltage that is somewhat larger than the final dc output voltage that you'll wish to use in your circuitry. This excess allows for the various losses that take place in the transformer, rectifier, filter, and regulator.

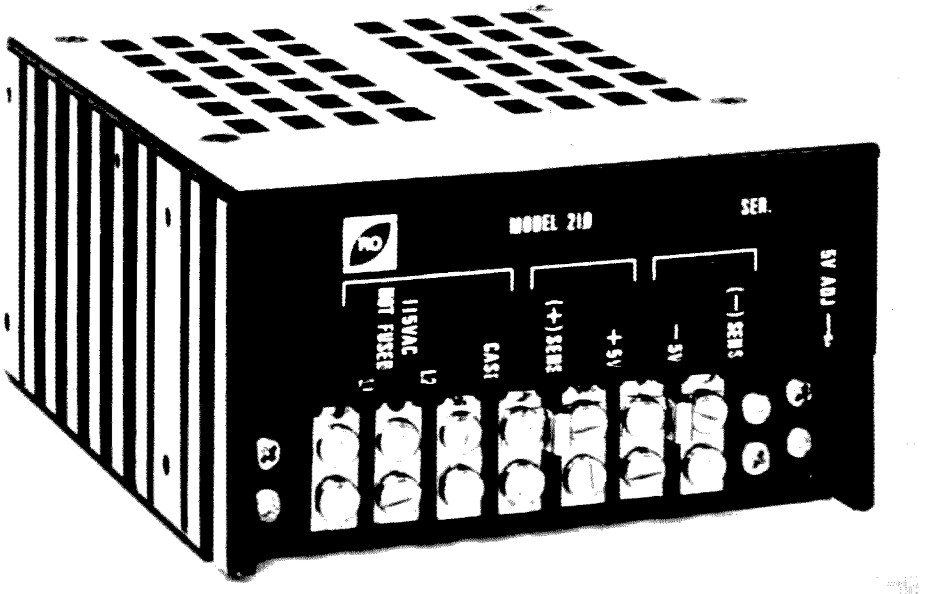

To illustrate this point, let's examine the typical case of a 5-volt, 8-Amp supply for a TTL system. The portion of the supply before the regulator is shown in Fig. 2. Two series-connected (6.3 and 2.5 V) transformers provide full-wave rectified dc via a silicon bridge rectifier, and the filter is a 12,000 μF capacitor. There are losses in the transformer itself, the most obvious one being the secondary winding resistance. The rectifiers also have a forward voltage drop, which varies with current, as shown in Fig. 3.

Note that, in the bridge rectifier, since two series rectifiers are involved in charging the capacitor, the forward voltage drop is double that of a single rectifier. And, finally, the capacitor itself (because of its finite capacity) has an apparent drop of voltage across it as increasing current is drawn from it. This is not a loss per se, but rather is simply due to the fact that the capacitor can only store so much energy between rectified ac cycles. The net effect of all this is that the filter output voltage at point C versus the current of the supply shown in Fig. 2 is like that shown in Fig. 4. The output at point C can be as high as 12.6 volts at no load and as low as 8.6 volts at an 8-Amp load. The regulator attempts to "slice off" the variations at the dotted line in Fig. 4 and put out a constant +5 volts regardless of the

loading (up to 8 Amps).

Most regulators require that their unregulated input be at least 2 or 3 volts above the output voltage. So, in order to have a nice constant 5-volt output capable of operating 8-Amps worth of TTL and other microcomputer IC chips, you must waste considerable power in the supply. The wasted power shows up as heat, and, therefore, you find large aluminum heat sinks and even fans in some microcomputers.

Power transformers are generally made up of E-shaped and I-shaped thin laminations of silicon steel interleaved and mutually insulated with a varnish. This standard configuration has been around, pretty much unchanged, since the earliest days of electronics. The windings, generally of insulated copper wire, are wound so as to pass through the "windows" formed by the E-I iron stack (core). There may be only a primary and a secondary, or there may be multiple secondary windings, and some windings may be tapped. Occasionally, transformers may have two primaries, too, so that they may be connected in parallel for 120 V ac or in series for 240 V ac. As an example of a common transformer having both primary and secondary taps for almost universal use in low-voltage power supplies, consider the Triad F92A, as shown in Fig. 5. Note that the secondary is center-tapped, and then one section of the secondary between the (yellow) center tap and the red lead is again center-tapped (blue). With these taps and those on the primary, you can achieve all the voltages shown. The Triad F92A is rated at 1 Amp secondary current. As you'll see, this may provide up to 2 Amps of dc in the full-wave rectifier connection. Triad has a series of transformers (F90X through F94X) that have the same voltages and taps as the F92A, but have smaller current ratings, down to 35 mA.

The variations of rectifier-filters further increase the flexibility with which we can adapt a given transformer to suit a desired output voltage and current. In Fig. 6 are presented seven different rectifier-filter combinations, all based on the same transformer and the same capacitance-voltage product. Note the seven rather different load curves for the seven different circuits. It also should be noted that all the rectifier-filter circuits except (a) and (g) produce full-wave rectification, having a ripple frequency of twice the line frequency (which is easier to filter out of the dc than a ripple frequency that is equal to the line frequency).

There are two variations on the bridge circuits that can be useful in logic designs using microprocessors, where multiple voltages and positive and negative voltages are often required. The circuit of Fig. 7(b) produces equal positive and negative voltages. It might be argued that the circuits 7(a) and 7(b) are one and the same, with a different point serving as common in the two cases. This, of course, is a valid way of looking at the circuits. Circuit 7(b) might also be looked upon as being two full-wave rectifier circuits, like that in Fig. 6(b), operating from the same

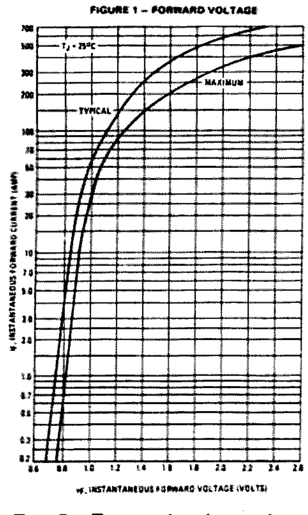

Fig. 3. Forward voltage drop (of one diode) of a Motorola MDA980 bridge rectifier.

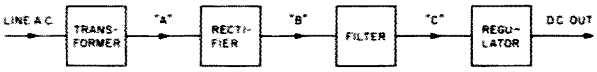

Fig. 1. Block diagram of a conventional regulated power supply.

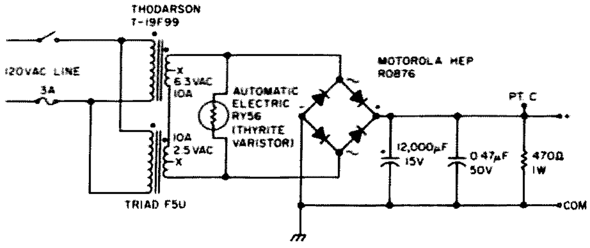

Fig. 2.

transformer.

Regulators have grown in sophistication from a simple resistor-zener combination, through the emitter-follower regulator, the simple one-transistor gain stage closed-loop regulator, the closed-loop regulator using differential amplifier or op amp, and the special-purpose IC regulator. These stages of regulator evolution (Fig. 8) have brought us to the modern 3-terminal and 4-terminal IC regulators, which need no external power transistors in conjunction with them. The modern 3-terminal or 4-terminal regulator can handle currents up to 5 Amps alone (on an adequate heat sink) and is the type of regulator almost universally used in hobby microcomputers.

The first really popular three-terminal regulator IC was the National LM309, a +5-volt fixed regulator in a TO-3 (large diamond) package. The LM309 is also available in the TO-5 "metal can" package, when smaller current capability is needed. The 5 V, 1 Amp rating of the LM309 made it instantly accepted for use in TTL systems. Since microcomputers often need as much as 20 Amps of the regulated +5 volts, the general practice was to "put an LM309 on every board" and use a sort of distributed regulation system. A block diagram of such a scheme is shown in Fig. 9. Note that unregulated dc is distributed on the bus of the microcomputer, and regulation for each board is accomplished by a regulator IC on that board. This method has a number of advantages over using one big brute of a regulator and then fanning out regulated +5 volts over the microcomputer bus. The first and most obvious advantage is that the heat dissipated in the regulators is spread out over the length of the bus, which helps prevent hot

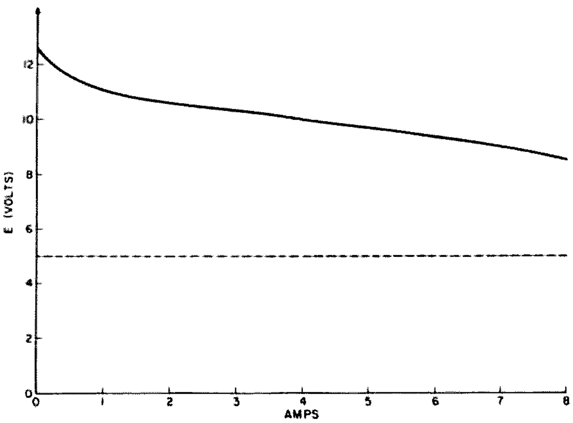

Fig. 4. Regulation curve of supply in Fig. 2.

These transformers are designed for use with silicon diode rectifiers, to supply the dc voltages for transistors in their various applications. They are intended for use with full-wave bridge or bridge rectifiers, but may be used with voltage-doubler circuits at one-half of the rated current.

Caution: Never apply the full line voltage (115 volts) between the Black/Red and Black leads of the primary. One of these leads is used as a primary common lead in all applications. The lowest output voltage is obtained when the available line voltage is applied to the Black/Red and Black/White primary leads.

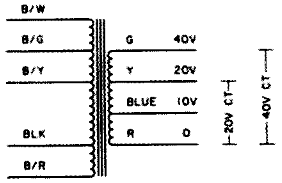

Primary
115 volts ac 60 cps

Secondary ac voltages obtainable

40 V c-t, 38 V c-t, 34 V c-t, 32 V c-t, 30 V c-t,
28 V c-t, 20 V c-t, 19 V c-t, 17 V c-t, 16 V c-t,
15 V c-t, 14 V c-t
30 V 28.5 V 25.5 V 24 V 22.5 V 21 V
10 V 9.5 V 8.5 V 8 V 7.5 V 7 V

		Secondary							
Lead	Lead	Leads	Green Red	Leads	Green Blue	Leeds	Yellow Red	Leads	Blue Red
Black/Yellow	Black	40 V c-t	Yellow	30 V		20 V c-t	Blue	10 V	
Black/Yellow	Black/Red	38 V c-t	Yellow	28.5 V		19 V c-t	Blue	9.5 V	
Black/Green	Black	34 V c-t	Yellow	25.5 V		17 V c-t	Blue	8.5 V	
Black/Green	Black/Red	32 V c-t	Yellow	24 V		16 V c-t	Blue	8 V	
Black/White	Black	30 V c-t	Yellow	22.5 V		15 V c-t	Blue	7.5 V	
Black/White	Black/Red	28 V c-t	Yellow	21 V		14 V c-t	Blue	7 V	

Fig. 5. Triad F92A transformer (1 Amp rated) showing how primary and secondary taps can increase flexibility.

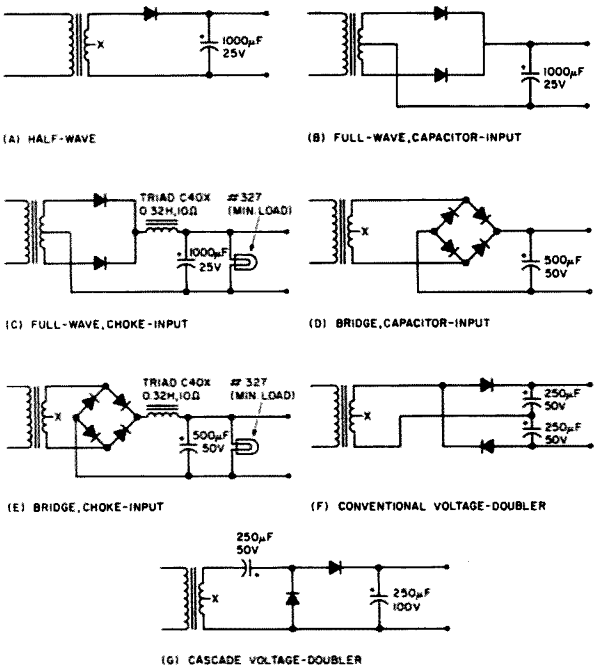

Fig. 6. All use Triad F40X 26.8 V ac c-t at 1 Amp transformers and 1N4002 rectifiers.

spots. The second advantage is that the inductance and resistance of the bus itself is ahead of the regulator, so changes in current in this impedance leg (from the various sections of the microcomputer) do not result in voltages that cause card-to-card communication of logic pulses over unauthorized paths. Another advantage of distributed regulation is that of ease of troubleshooting. When one card develops a short, only that card's regulator goes into current limiting (at 1 Amp), and the card can quickly be isolated, removed, and repaired.

Some notes and precautions should be added on the LM309 and its use. The LM309 is required to have at least 0.22 μF across its input and common pins. This requirement can be filled by the rectifier-filter capacitor if it is within about 2 inches of the input pin of the LM309. I also add the 0.22 μF capacitor across the output of the IC. The output capacitor doesn't affect stability, but it lowers the high-frequency output impedance of the regulators. These two added capacitors will stabilize and improve the regulation of not only the LM309, but also almost all the other 3-terminal regulators to be covered in the next few paragraphs.

To date, the LM309 is second-sourced by seven other IC manufacturers – Fairchild, Motorola, NPC, Raytheon, Signetics, Silicon General, and Texas Instruments.

More recently, National has introduced the LM323, a sort of super LM309. It, too, is a 5-volt regulator, but has 3-Amp output capability.

Since National introduced the LM309, a number of companies have expanded the fixed-voltage three-terminal regulator IC business considerably. Fairchild introduced the μA7800 series in both the TO-3 package and also in the economical TO-220 plastic power package. The μA7800 was available in a variety of output voltages from +5 volts to +24 volts. The last two digits of the μA7800 number indicate the output voltage; for instance, a μA7812 is a +12-volt regulator.

After the introduction of the LM309 and the μA7800 series by National and Fairchild, most of the other linear IC manufacturers in the U.S. got into the act. Now experimenters can buy one of the "7800" series from a variety of IC producers, and the mail-order houses have them at what appear to be shockingly low prices. Often the surplus or hobby-grade regulators will be out-of-spec units having voltage-output or current-limit specs not within the published requirements. I've even seen a few such bargains that apparently regulated, but had high-frequency oscillations in their output. You certainly can get a bargain in surplus 3-terminal regulator ICs, but it's wise to check your purchase care-

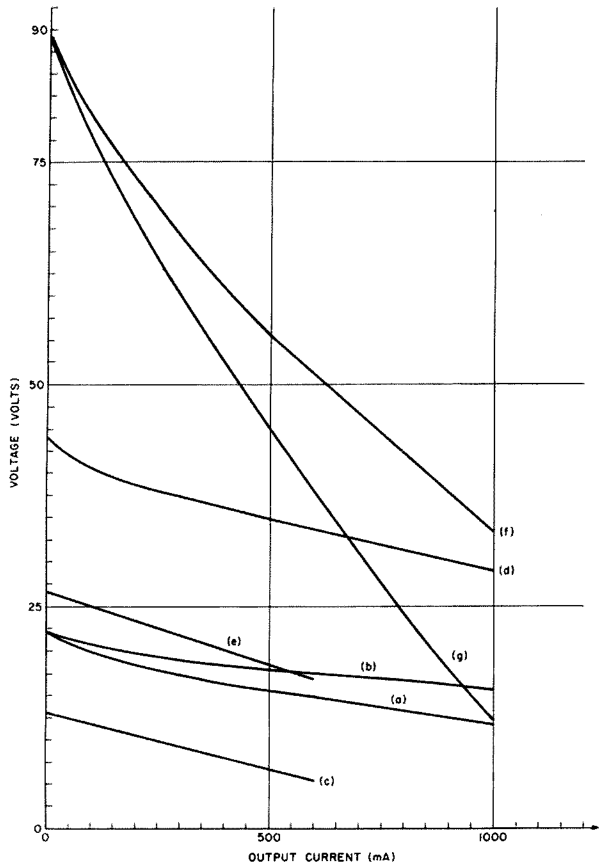

Fig. 7. Curves (c) and (e) are continued only to 600 mA because of choke rating.

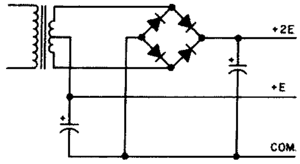

Fig. 7(a).

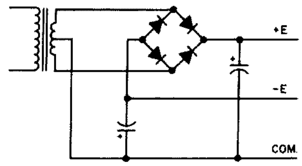

Fig. 7(b).

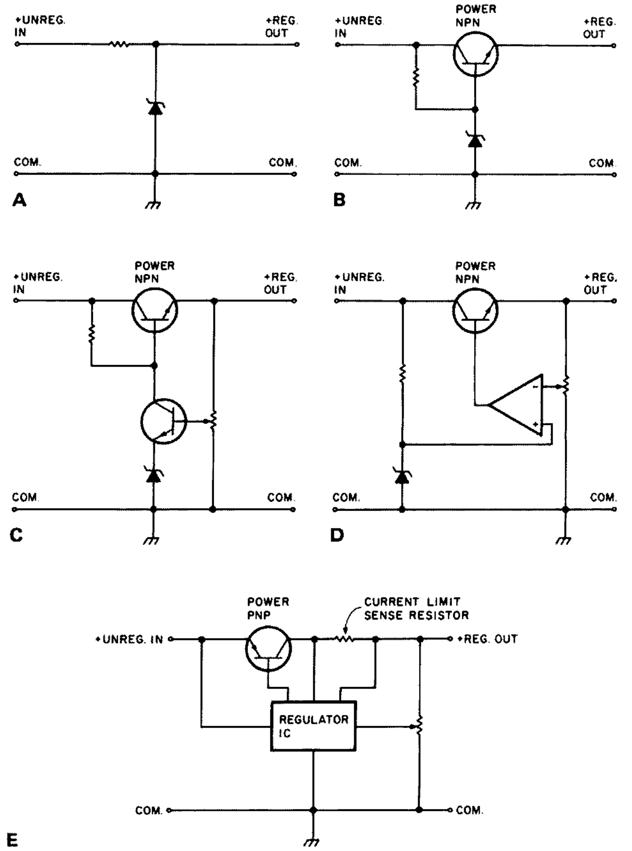

Fig. 8. (a) Resistor-zener regulator. (b) Emitter-follower regulator. (c) Regulator with one-transistor gain stage. (d) Regulator using differential amplifier or op amp. (e) Regulator using one of the first-generation IC regulators, such as the Fairchild μA723, National LM300, or Motorola MC1460.

fully.

The 3-terminal regulator IC business has expanded in several directions since the μA7800 series introduction. Both larger and smaller current versions have been introduced, and a whole series of negative 3-terminal regulators has been made available. The most common negative version is the "7900" series, although the National LM320 series is also popular. National has the LM340 for its positive 3-terminal regulator and LM320 for its negative units. The two digits following the dash in the National part number identify the regulated output voltage.

So that you can order the proper 3-terminal regulator IC from among all the various types available, I have compiled some tables. In these tables, I have included only the commercial grades of regulators; military and high-reliability parts are not usually used by the hobby market because of their cost. In Table 1 are presented the 7800 and 3400 series of 3-terminal regulators, representing the base line or standard family. Table 2 gives the 78M00 medium-current families, having less current capability than those in Table 1. Then Table 3 goes still further down in current rating to the 78L00 group. Fairchild has recently introduced a family of higher current 3-terminal regulators, which is shown in Table 4. These ICs have greater current capability than the 7800 series.

A new and rather innovative addition to the 3-terminal positive-regulator IC series is the Signetics μA78HV00 series. These are essentially the same as the Signetics μA7800 series (Table 1), except that they will take voltages at the input up to 60 volts, as compared to the standard of 35 to 40 volts. This option protects the regulator IC against transients

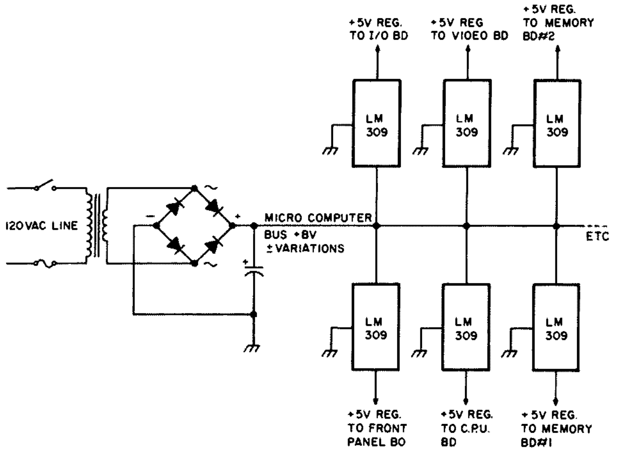

Fig. 9. A distributed regulator, where unregulated dc is connected to individual IC regulators on each card in the microcomputer via the bus.

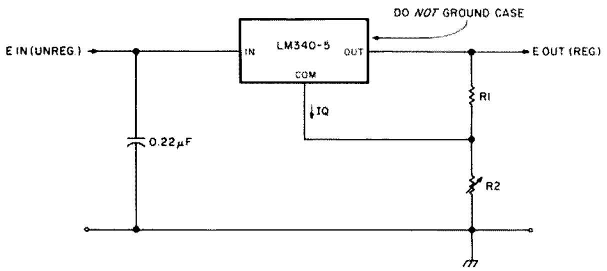

Fig. 10. Variable output from a fixed positive regulator — +5 volt type shown. $E_{out} = 5 + [(5/R1) + I_Q]\ R2$.

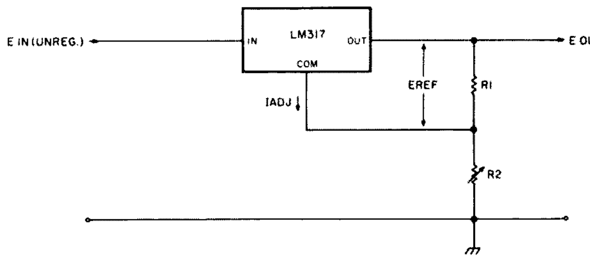

Fig. 11. LM317 as a variable positive regulator. $E_{out} = E_{ref}[1 + (R2/R1) + I_{adj}\ R2]$.

that could otherwise ruin it. Signetics has also released another innovation in their μA7800 and μA78HV00 series — the +13.8-volt regulator. This is intended to be used to provide +13.8 volts in simple regulated supplies for operating equipment that was designed to be used in automobiles. These regulators are designated the μA7814 and μA78HV14 by Signetics.

The negative 3-terminal regulators are shown in Tables 5, 6, and 7. Like their positive relatives, negative 3-terminal fixed-voltage regulator ICs come in several current ratings. The LM345/LM345.2, available only in -5-volt and -5.2-volt outputs, is made by National. The LM345/LM345.2 is a 3-Amp unit and will probably be second-sourced by other manufacturers soon.

Before leaving the subject of 3-terminal regulators, a word of caution is appropriate. The positive ones all have the case or metal tab connected to the common lead. This means that a good thermal and electrical connection to the chassis or mainframe is easy and allowable. Don't try to ground the case of the negative 3-terminal regulators, however, because that is generally the input lead. If your IC regulators are all card-mounted with floating heat dissipaters, this consideration is unimportant (except that you should remember that the floating heat dissipater is not a convenient

Manufacturer	2.6 V	5 V	6 V	8 V	10 V	12 V	15 V	18 V	20 V	24 V	28 V
Fairchild	--	uA7805	uA7806	uA7808	--	uA7812	uA7815	uA7818	--	uA7824	--
Lambda	--	LAS1505	LAS1506	LAS1508	LAS1510	LAS1512	LAS1515	LAS1518	LAS1520	LAS1524	LAS1528
Motorola	--	MC7805	MC7806	MC7808	--	MC7812	MC7815	MC7818	--	MC7824	--
Motorola HEP	--	C6110P	C6111P	C6112P	--	C6113P	C6114P	C6115P	--	C6116P	--
National	--	LM340-5	LM340-6	LM340-8	LM340-10	LM340-12	LM340-15	LM340-18	--	LM340-24	--
National	--	LM7805	LM7806	LM7808	LM7810	LM7812	LM7815	LM7818	--	LM7824	--
Plessey	--	SL7805	SL7806	--	--	SL7812	SL7815	SL7818	--	SL7824	--
Signetics	--	uA7805	uA7806	uA7808	--	uA7812	uA7815	uA7818	--	uA7824	--
Signetics	--	LM340-5	LM340-6	LM340-8	--	LM340-12	LM340-15	LM340-18	--	LM340-24	---
Silicon General	--	SG7805	SG7806	SG7808	--	SG7812	SG7815	SG7818	--	SG7824	--
Texas Instruments	--	uA7805	uA7806	uA7808	uA7810	uA7812	uA7815	uA7818	--	uA7824	--

Table 1. Three-terminal fixed-voltage regulators. Maximum current output = 1 to 1.5 Amps.

Manufacturer	2.6 V	5 V	6 V	8 V	10 V	12 V	15 V	18 V	20 V	24 V	28 V
Fairchild	--	uA78M05	uA78M05	uA78M08	--	uA78M12	uA78M15	uA78M18	uA78M20	uA78M24	--
Motorola	--	MC78M05	MC78M06	MC78M08	--	MC78M12	MC78M15	MC78M18	MC78M20	MC78M24	--
Motorola	--	MC7705	MC7706	MC7708	--	MC7712	MC7715	MC7718	MC7720	MC7724	--
National	--	LM341-5	LM341-6	LM341-8	--	LM341-12	LM341-15	LM341-18	--	LM341-24	--
Plessey	--	SL78M05	SL78M06	SL78M08	--	SL78M12	SL78M15	--	SL78M20	--	--
Signetics	--	uA78M05	uA78M06	uA78M08	--	uA78M12	uA78M15	--	uA78M20	uA78M24	–
Texas Instruments	--	uA78M05	uA78M06	uA78M08	--	uA78M12	uA78M15	--	uA78M20	uA78M24	--

Table 2. Three-terminal fixed-voltage regulators. Maximum current = 0.5 to 0.75 Amps.

Manufacturer	2.6 V	5 V	6 V	8 V	10 V	12 V	15 V	18 V	20 V	24 V	28 V
Fairchild	uA78L26	uA78L05	--	uA78L08	--	uA78L12	uA78L15	uA78L18	--	uA78L24	--
Motorola	MC78L02	MC78L05	--	MC78L08	--	MC78L12	MC78L15	MC78L18	--	MC78L24	--
National	--	LM78L05	LM78L06	LM78L08	LM78L10	LM78L12	LM78L15	LM78L18	--	LM78L24	--
National	--	LM340LA -5	LM340LA -6	LM340LA -8	LM340LA -10	LM340LA -12	LM340LA -15	LM340LA -18	--	LM340LA -24	--
National	--	LM342-5	LM342-6	LM342-8	LM342-10	LM342-12	LM342-15	LM342-18	--	LM342-24	--
National	--	LM3910 -5	LM3910 -6	LM3910 -8	LM3910 -10	LM3910 -12	LM3910 -15	LM3910 -18	--	LM3910 -24	--
Plessey	--	SL78L05	SL78L06	SL78L08	--	SL78L12	SL78L15	SL78L18	SL78L20	SL78L20	--
Signetics	uA78L02	uA78L05	--	uA78L08	--	uA78L12	uA78L15	--	--	--	--
Texas Instruments	uA78L02	uA78L05	--	uA78L08	--	uA78L12	uA78L15	--	--	--	--

Table 3. Three-terminal fixed-voltage regulators. Maximum current = 100 to 200 mA.

Manufacturer	2.6 V	5 V	6V	8 V	10 V	12 V	15 V	18 V	20 V	24 V	28 V
Fairchild	--	uA78H05	--	--	--	uA78H12	uA78H15	--	--	--	---

Table 4. Three-terminal fixed-voltage regulators. Imax = 5 Amps.

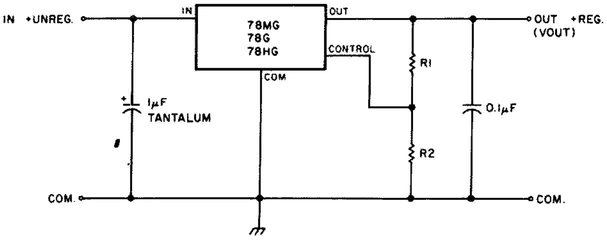

Fig. 12(a). $V_{out} = 5[(R1 + R2)/R2]$.

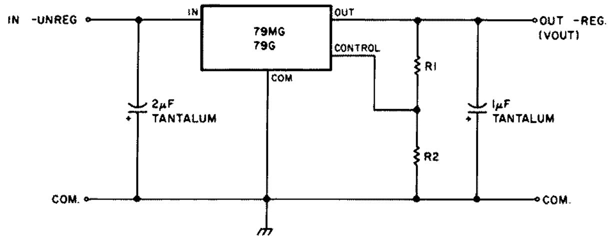

Fig. 12(b). $V_{out} = -2.23[(R1 + R2)/R2]$.

place to clip on the ground lead of an oscilloscope when troubleshooting).

The four-terminal regulators are power ICs of a later design than the fixed output 3-terminal regulators. There are no families of these ICs, since one size fits all. Of course, almost any of the positive 3-terminal fixed-voltage IC regulators can be adapted to variable output, as shown in Fig. 10. However, National Semiconductor makes one especially designed for such use – the LM317. The LM317 is available in TO-3, TO-5, TO-202, and TO-220 packages; the last two are the plastic power packages. The current rating is in excess of 1.5 Amps. In Fig. 11, the LM317 is shown in use with the two external resistors used to make it variable. The LM317 is second-sourced by Motorola and Texas Instruments.

Fairchild has chosen the 4-terminal approach in variable-output voltage power IC regulators. In positive four-terminal regulators, there are the 78MG, 78G, and 78HG types. These are, respectively, 500 mA, 1 Amp, and 5 Amps current rating. The negative four-terminal regulators are the 78MG and 79G in 500 mA and 1 Amp current ratings. In Fig. 12(a) are shown the 78MG, 78G, and 78HG, and in Fig. 12(b) are shown the 79MG and 79G in regulator circuits.

Lambda has also introduced positive and negative four-terminal IC regulators. These regulators, the LAS-15-U and LAS-18-U, respectively, are rated at 1.5 Amps. Another positive Lambda four-terminal regulator rated at 3 Amps is the LAS-14-U.

It is a matter of fact that many of today's computer freaks are members of the younger generation, who have to do a great deal of making-do to stretch their computer budgets. One of the things you can do to effect economy in the microcomputer is to build your own power supply. Rather than buying a large special transformer to do the job, it is possible to use combinations of old filament transformers to accomplish the same end. Since tubes (especially the older transmitting types) have 2.5, 5, 6.3, 7.5, and even 10 V filaments, there is a large variety of such transformers available from most ham auctions and flea markets. Rectifiers capable of 18 Amps (silicon) are very cheap because of their use in automotive alternators. So you ought to be able to construct a supply for a fairly good-size microcomputer for not too much money. As an example of such a supply, my own version of an Altair-type supply is presented in Fig. 13. This supply is by no means copied from the Altair, but produces similar output voltages and currents, since my own micro uses the Altair bus system and is similar to the Altair in several other respects.

Because even relatively modest microcomputers use copious quantities of power and, in the process, waste about as much power as they use (in heat), much attention has recently been given to making more efficient power supplies. One way to do this is to rectify and filter the 120-volt ac line and then use a switching regulator. By switching at a frequency of about 20 kHz, a small ferrite transformer may be used (for

Manufacturer	-2 V	-5 V	-5.2 V	-6 V	-8 V	-12 V	-15 V	-18 V	-24 V
Fairchild	uA7902	uA7905	--	uA7906	uA7908	uA7912	uA7915	uA7918	uA7924
Lambda	LAS1802	LAS1805	LAS18052	LAS1806	LAS1808	LAS1812	LAS1815	LAS1818	LAS1824
Motorola	MC7902	MC7905	MC7905.2	MC7906	MC7908	MC7912	MC7915	MC7918	MC7924
Motorola (HEP)	C6117P	C6118P	C6119P	C6120P	C6121P	C6122P	C6123P	C6124P	C6125P
National	--	LM7905	LM7905.2	LM7906	LM7908	LM7912	LM7915	LM7918	LM7924
National	--	LM320-5	LM320-5.2	LM320-6	LM320-8	LM320-12	LM320-15	LM320-18	LM320-24
Silicon General	--	SG320-5	SG320-5.2	--	--	SG320-12	SG320-15	--	--
Texas Instruments	--	uA7905	--	uA7906	uA7908	uA7912	uA7915	uA7918	uA7924

Table 5. Three-terminal fixed-voltage regulators. Maximum current = 1 to 1.5 Amps (negative).

Manufacturer	-3 V	-5 V	-5.2 V	-6 V	-8 V	-12 V	-15 V	-18 V	-24 V
Fairchild	--	uA79M05	--	uA79M06	uA79M08	uA79M12	uA79M15	--	uA79M24
National	--	LM320M05	LM320M05 .2	LM320M06	LM320M08	LM320M12	LM320M15	LM320M18	LM320M24
Silicon General	--	SG320-05T	SG320-05 .2T	--	--	SG320-12T	SG320-15T	--	--
Texas Instruments	--	uA79M05	--	uA79M06	uA79M08	uA79M12	uA79M15	--	uA79M24

Table 6. Negative three-terminal fixed-voltage regulators. Maximum current = 200 to 500 mA.

Manufacturer	-2.6 V	-5 V	-5.2 V	-6 V	-8 V	-12 V	-15 V	-18 V	-24 V
Motorola	MC79L03	MC79L05	--	--	--	MC79L12	MC79L15	MC79L18	MC79L24

Table 7. Negative three-terminal fixed-voltage regulators. Maximum current = 100 mA.

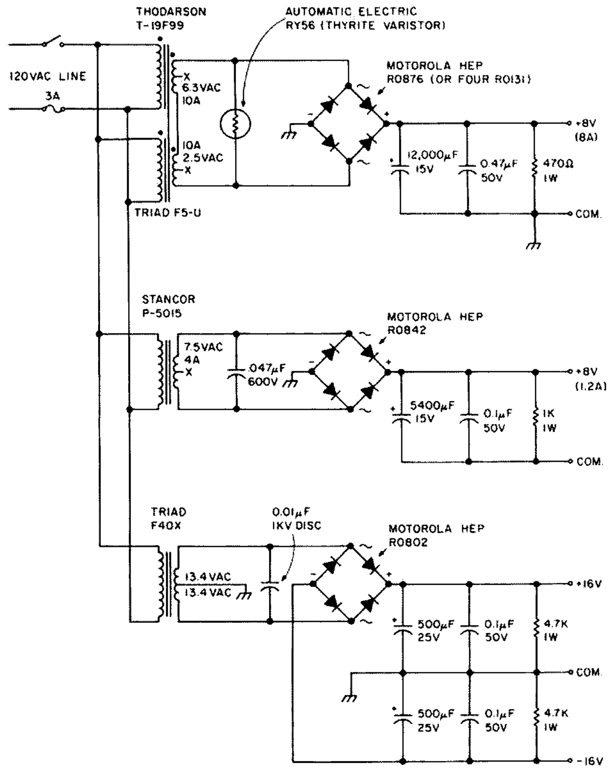

Fig. 13. Power supply built from available transformers for powering a microcomputer similar to the MITS Altair.

line isolation), and the magnetostriction noise is not annoying, because it's higher than human ears can hear. Not only does such a regulator reduce the transformer size by using a 20 kHz switching rate, but its main feature is that the regulation is accomplished in a nearly lossless fashion. This is done by pulse-width modulation and then integration of the pulses. Consider that the regulator puts out a 20 kHz square wave (before integration) when providing a normal load. An increase in loading of the supply would then increase the width of the positive pulse, and a decrease in loading would cause a decrease in the pulse width, because the feedback circuitry forces these conditions. Since we use transistors in either "off" or "on" (saturated) conditions, there is essentially no dissipation, as in the case of a series-pass transistor in a conventional regulator.

Why are not all regulators built with switching-mode regulators? They are not because switching regulators are complex and use semiconductors that are nearer the state of the art than do ordinary regulators. The switching transistors must be high-voltage switching types, 20 kHz rectifiers must be fast-recovery types, special transformers and chokes must be used, transient protective devices must be used throughout the circuitry, and extreme care must be used to make sure no 20 kHz (or its harmonics) leaks out of the supply into other sensitive circuitry. There are a number of power supply producers who have solved the problems associated with switching-regulated supplies, and sell such compact efficient supplies with rather good results in terms of reliability.

Recently, a number of IC manufacturers have produced ICs especially made for use in the control section of switching regulators. These ICs do alleviate some of the complexity, as illustrated in references 1 and 2. The main bugaboos (those in the power-handling components) remain, but the attractive features of switching-regulated supplies are so strong that a continuing engineering assault will probably ultimately make them simple enough so that home construction becomes feasible. This simplification will most likely come from the IC technologists, as it has in the past.

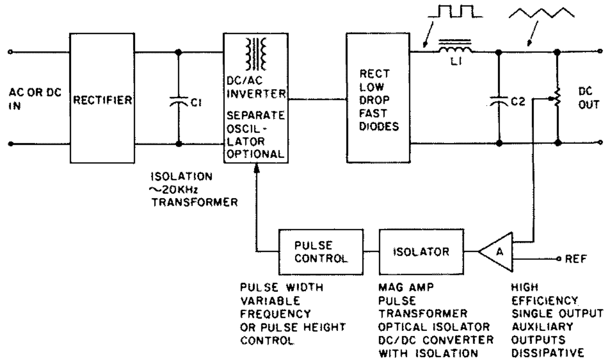

Fig. 14. A commercially-available switching-regulated supply (RO Associates).

As an example of a commercially-available switching-regulated supply, the RO model 210 is shown in Fig. 14. This supply packs 55 Watts into 45 cubic inches and is capable of 3.5 to 5.5 volts output at up to 10 Amps. The cost is $245.00 in single units, which puts it above conventional regulated supplies. However, if you are trying to squeeze ever more memory and other cards into your micro, and there's no more room or current available, the RO unit might be a welcome solution. RO makes similar switching-regulated supplies from 5 Amps up to 50 Amps (covering the +5-volt range), and it also supplies other voltages and multiple voltages.* There are certainly a number of other manufacturers of switching-regulated supplies, but I've picked one for an example that I know (from actual product use) to be worthy of mention.

As ever newer microprocessors are introduced, you can expect power supply requirements to change. Intersil and RCA, for example, have introduced CMOS µP families, with the capability of operating a complete microcomputer (at least for instructional purposes) on a few D cells. Also, Motorola has introduced a µP that is very fast and uses ECL. This sort of innovation will change the future power requirements of even the hobby microcomputer field. However, for the present, hobby microcomputers will (for economic reasons) probably muddle along using the power requirements we're used to – ±12 volts and lots of Amps at +5 volts.

For reference materials on the general subject of power supplies, I would suggest references 3, 4, 5, and 6. ■

*RO Associates, 3705 Haven Ave., Menlo Park CA 94025, (415)-322-5321.

References

1. Wurzburg, H., "Switch-mode Power Supply," *Motorola Engineering Bulletin*, EB65, Sept., 1976.
2. Mammano, R., "Simplifying Converter Design with a New Integrated Regulating Pulse Width Modulator," *Silicon General Application Note*, June, 1976.
3. Unitrode, "The Importance of Rectifier Characteristics in Switching Power Supply Design," Publication U-73, Unitrode Corporation.
4. Terman, F., *Radio Engineering*, Chapter 11, pp. 544-576, McGraw-Hill Book Co., Third Edition, 1947.
5. National Semiconductor, *Voltage Regulator Handbook*, May, 1975.
6. Motorola, *Voltage Regulator Handbook*, October, 1976.

The Exterminator

—for buggy KIMs

Dana Lasher
8613 Caswell Ct.
Raleigh NC 27612

Locating programming errors is never easy, and it can become immensely difficult as the size and complexity of the program increase. This debugging aid provides three facilities to assist in finding those programming errors.

The first facility allows the programmer to define locations in his program where he wishes the program to suspend execution so that he may examine data and registers to insure that the code is executing as designed. These locations, where program execution is suspended, are called breakpoints. During execution, when the program reaches a breakpoint location, control is passed to the KIM monitor, and the programmer has access to all the standard KIM functions. Execution may be resumed at the point of interruption by reestablishing the program counter and pressing the GO key.

The second facility allows the programmer to continually monitor a specific main storage location and have the program suspend execution when the contents of that location meet given criteria (e.g., stop when the contents equal zero, go negative, equal some specific value, are not equal to zero, etc.). This facility can be used to catch loop counters that exceed legal bounds or to trap a piece of code in one subroutine that is erroneously modifying an instruction or data in another subroutine.

The third facility allows the programmer to single step through his code as if he were using the KIM standard single-step function.

Hardware Operation

1024 bytes of KIM application RAM reside at addresses 0-3FF (hex). In addition, there are 103 bytes of application RAM at addresses 1780-17E6. The KIM monitor resides at addresses 1800-1FFF (see Fig. 1). The standard KIM single-step function causes control to be passed to the KIM monitor every time an instruction is

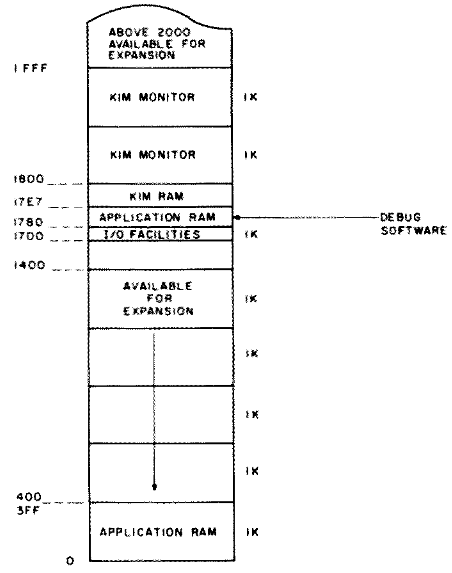

Fig. 1. KIM memory map.

Single-step output (true = fetching an instruction outside KIM monitor)	Decode circuit output (true = fetching an instruction from 1780-17E6)	Desired output (true = single step)
True	True	False
True	False	True
False	True	False
False	True	False

Fig. 2. Truth table for debug circuit.

Single-step output*	Decode circuit output*	Desired output*
Low	Low	High
Low	High	Low
High	Low	High
High	Low	High

Fig. 3. Voltage level for debug circuit. *Low voltage = true.

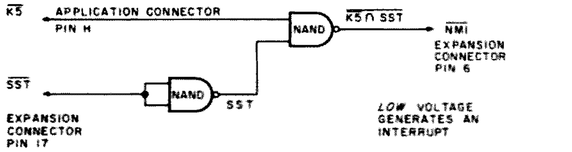

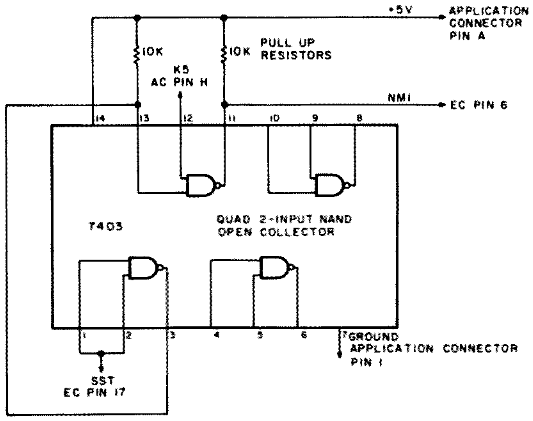

Fig. 4. Circuit for debug hardware.

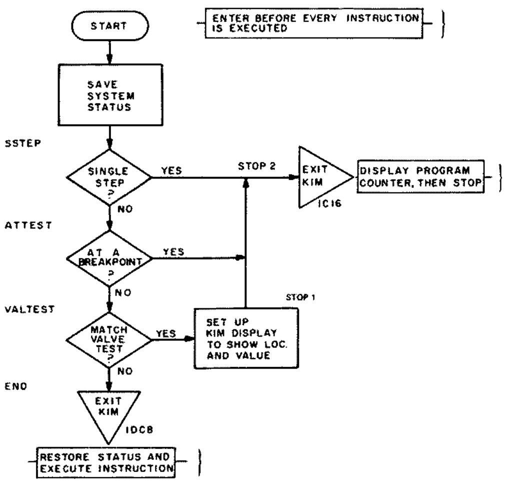

Fig. 5. Debug program flowchart.

fetched outside the range 1800-1FFF (the monitor). This allows the programmer to single step through his code, and it allows the monitor to execute at normal speed. The debug hardware modifies the single-step function so that any code at 1780-17E6 is also executed at normal speed, as if it were an extension of the monitor. In these 103 bytes, place the debug software. To accomplish this modified single-step function, combine the normal single-step output (SST OUT, pin 17 on the expansion connector) with the decode circuitry that indicates the instruction is being fetched from 1780-17E6 (K5, pin H on the application connector), and suppress the interrupt. The truth table for the circuit is shown in Fig. 2, and the associated voltage level table is shown in Fig. 3. Note, it is not clear from the KIM documentation that the normal single-step output voltage is LOW to generate an interrupt and that the output of K5 is LOW when an instruction is being fetched from 1780-17E6. The circuit is shown in Fig. 4. It uses two gates of a 7403 quad 2-input NAND gate IC. The two resistors are 10k Ohm, 1/4 Watt pull-up resistors, needed because the 7403 is an open-collector device.

Software Operation

The debug software (Program A) receives control before each instruction is executed. It first saves the status of the system, registers, program counter, and status register. It then checks to see whether the user is in single-step mode. If he is, the debug software exits to the KIM monitor. Note that the KIM single-step switch is not used. If it was, then the system would single step through the debug software, which we do not want.

Next, a check is made to see whether a user-specified breakpoint has been reached. If so, the software exits to KIM and displays the breakpoint address. If the program is not at a breakpoint, a check is made to see whether the user has specified a value test. To do this, the user would have provided an address, the type of compare to be performed, and a test value to be compared against. The software performs the test, and, if a match is found, the software exits to KIM, displaying the address specified and its contents. If a match is not found, the program exits to KIM at a different point to restore the system's status and to allow the instruction to be executed. See the flowchart in Fig. 5.

```
LOC  CONTENTS             LABEL    OP    OPERAND   COMMENTS
                          ;
                          ;
                          ;        EQUATES
                          ;
                          ;
                          ACC      =$F3
                          PREG     =$F1
                          PCL      =$EF
                          PCH      =$F0
                          POINTL   =$FA
                          POINTH   =$FB
                          YREG     =$F4
                          XREG     =$F5
                          SPUSER   =$F2
                          ZERO     =$0000
                          KIM1     =$1DC8
                          KIM2     =$1C16
                          ;
                          ;        SAVE THE SYSTEMS STATUS
                          ;
1780 85F3                 START    STA   ACC       SAVE ACCUMULATOR
1782 68                            PLA             PULL THE STATUS REGISTER
1783 85F1                          STA   PREG      SAVE STATUS REGISTER
1785 68                            PLA             PULL PGM COUNTER LO
1786 85EF                          STA   PCL       SAVE PGM COUNTER LO
1788 85FA                          STA   POINTL    SET UP KIM DISPLAY
178A 68                            PLA             PULL PGM COUNTER HI
178B 85F0                          STA   PCH       SAVE PGM COUNTER HI
178D 85FB                          STA   POINTH    SET UP KIM DISPLAY
178F 84F4                          STY   YREG      SAVE Y INDEX REG.
1791 86F5                          STX   XREG      SAVE X INDEX REG
1793 BA                            TSX             SAVE THE USERS STACK
1794 86F2                          STX   SPUSER
                          ;
                          ;
                          ;        CHECK FOR SINGLE STEP MODE
                          ;
                          ;
1796 ADE617               SSTEP    LDA   SSTEPSW   LOAD SINGLE STEP SWITCH
1799 D039                          BNE   STOP2     IF ITS NOT ZERO, STOP
                          ;
                          ;
                          ;        THIS ROUTINE  TESTS WHETHER A BREAKPOINT
                          ;        HAS BEEN REACHED.
                          ;
                          ;
179B A200                 ATTEST   LDX   #$00      X INDEXES INTO BP LIST
179D BDDC17               CHECK    LDA   ATADR,X   GET HI PART OF ADDRESS
19A0 C5F0                          CMP   PCH       DOES HI PART MATCH PCH
19A2 D007                          BNE   NEXT      IF NOT...GET NEXT BP
17A4 BDDD17                        LDA   ATADR+1,X    LO PART OF ADDRESS
17A7 C5EF                          CMP   PCL       DOES IT MATCH PCL
17A9 F029                          BEQ   STOP2     YES...STOP
17AB E8                   NEXT     INX             SET UP FOR NEXT TEST
17AC E8                            INX
17AD E00A                          CPX   #$0A      DONE TESTING?
17AF D0EC                          BNE   CHECK     NO...GO DO ANOTHER
                          ;
                          ;
                          ;        TEST WHETHER THE USER HAS SET UP
                          ;        A VALUE TEST.  IF SO, TEST THE CONTENTS OF
                          ;        ADDRESS AGAINST THE VALUE SPECIFIED AND
                          ;        IF THEY MATCH, THEN STOP.
                          ;
                          ;
17B1 AED817               VALTEST  LDX   VALADR    GET HI PART OF ADR.
17B4 8ECA17                        STX   COMP+2    STORE IN COMPARE INSTR.
17B7 ACD917                        LDY   VALADR+1  GET LO PART OF ADR.
17BA 8CC917                        STY   COMP+1    STORE IN COMPARE INSTR.
17BD ADDA17                        LDA   CODE      GET TYPE OF COMPARE
17C0 F00B                          BEQ   END       SKIP IF CODE=0
17C2 8DCB17                        STA   BR        ELSE STORE OP CODE
17C5 ADDB17                        LDA   VAL       GET VALUE TO BE TESTED
17C8 CD0000               COMP     CMP   ZERO         COMPARE
17CB F003                 BR       BEQ   STOP1        BRANCH IF MATCH
17CD 4CC81D               END      JMP   KIM1      NO MATCH, GO TO KIM
17D0 86FB                 STOP1    STX   POINTH    SET UP KIM DISPLAY
17D2 84FA                          STY   POINTL    SET UP KIM DISPLAY
17D4 4C161C               STOP2    JMP   KIM2      GO TO KIM
17D7 EA                            NOP
                          ;
                          ;
                          ;        CONSTANTS
                          ;
                          ;
17D8 0000                 VALADR   .WORD $0000
17DA 00                   CODE     .BYTE $00
17DB 00                   VAL      .BYTE $00
17DC FFFF                 ATADR    .WORD $FFFF     THESE ARE THE
17DE FFFF                          .WORD $FFFF     FIVE BREAKPOINT
17E0 FFFF                          .WORD $FFFF     LOCATIONS
17E2 FFFF                          .WORD $FFFF
17E4 FFFF                          .WORD $FFFF
17E6 00                   SSTEPSW  .BYTE $00       SINGLE STEP SWITCH
```

Program A. Debug software.

Instructions

Load the program into locations 1780-17E6. Set the interrupt vector (17FA=80 and 17FB=17). Connect the output of the circuit (Fig. 4) to NMI (pin 6 on the expansion connector).

A. To single step.

1. Set the single-step switch location 17E6 to any nonzero value. Start the execution of your program. Each time you press GO, you will execute one instruction.

2. At any time, you can disable the single-step function by setting 17E6 back to zero.

B. To set a breakpoint (up to five breakpoints may be active at once).

1. Set any of the breakpoint locations to the desired stopping address. Breakpoint locations are: 17DC-17DD, 17DE-17DF, 17E0-17E1, 17E2-17E3, and 17E4-17E5. For example, to stop at location 0245, set 17DC = 02 and 17DD = 45, and to also stop at location 0350, set 17DE =

Test address 17D8-9	Code 17DA	Value 17DB	Breakpoints #1 17DC-D	#2 17DE-F	#3 17EO-1	#4 17E2-3	#5 17E4-5
0147	F0	00	0245	0350			
0250	D0	A9					
0235	F0	FF					
0177	90	C0					
0035	B0	05					

Fig. 6. Sample form for keeping track of break points.

03 and 17DF = 50.

2. To remove a breakpoint, reset the breakpoint location to FFFF.

C. To perform a value test.

1. Set locations 17D8-17D9 to the desired memory address (17D8 = high part of the address and 17D9 = low part of the address).

2. Set 17DA for the type of compare desired (17DA = F0 for an equal compare, 17DA = D0 for a not equal compare, 17DA = B0 to test for the memory location being equal to or less than the value specified, and 17DA = 90 to test for the memory location being greater than the value specified). Set 17DA = 00 if you do not want to perform any test.

3. Set 17DB to the value to be compared against.

Example: To stop if location 0147 = 00, set: 17D8 = 01, 17D9 = 47, 17DA = F0, 17DB = 00.

Example: To stop if location 0250 is not equal to A9, set: 17D8 = 12, 17D9 = 50, 17DA = D0, 17DB = A9.

Example: To stop if location 0325 goes negative (equals -1), set: 17D8 = 03, 17D9 = 25, 17DA = F0, 17DB = FF.

Example: To stop if location 0177 becomes greater than C0, set: 17D8 = 01, 17D9 = 77, 17DA = 90, 17DB = C0.

Example: To stop if 0035 is less than or equal to 05, set: 17D8 = 00, 17D9 = 35, 17DA = B0, 17DB = 05.

Note: To disable the test function, set 17DA = 00.

Notes

Make sure you set the interrupt vector (17FA = 80, 17FB = 17). If you have a BREAK instruction in your code (opcode = 00), it will not exit to KIM as usual. To make it work properly, set a breakpoint at the location of the BREAK instruction. The STOP key will not exit to KIM either. If you lose control of your program, hit RESET. If you want to perform a value test on any of the registers (accumulator, index, status), set the value test to work on the zero page locations where these registers are stored when an interrupt occurs (status register = F1, stack pointer = F2, accumulator = F3, yreg = F4, xreg = F5).

Hints on Debugging

Write the code in modular form. Use separate subroutines for each identifiable function. When testing the code, set breakpoints at the entry and exit to a subroutine. When you stop at the entry to the subroutine, test all input data to insure it is valid. Now set breakpoints and value tests within the subroutine to test loop counters, variables, etc. When you stop at the exit from the subroutine, test the output data created by the subroutine. Repeat for other subroutines. It is very helpful to keep track of where you are by writing down active breakpoints and value tests. Use a form such as the one in Fig. 6. ■

Dr. John F. Stewart
Box 248237
University of Miami
Coral Gables FL 33124

At Last! A Use For Your Computer!

—RTTY filter design program in BASIC

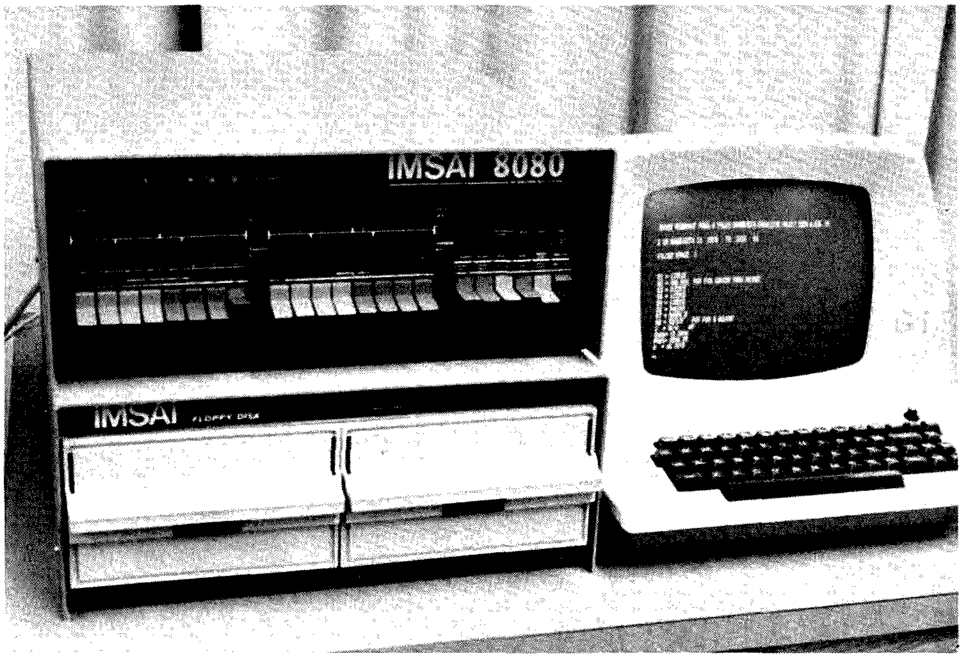

An Imsai 8080 in the University of Miami's Hertz Computer Lab displays part of the solution to a filter design problem.

The September, 1977, issue of *73 Magazine,* which was devoted to amateur RTTY, has quite a lot of good information in it. One of the articles that appealed to me the most was "Design an Active RTTY Filter" by Peter Stark K2OAW. The method presented in this article for designing active bandpass filters is well illustrated and makes the whole design process relatively easy.

It occurred to me while reading the article that this type of scheme is a perfect candidate for computerization. It should make a good example of a computer making life a little easier for the radio amateur attempting to home brew RTTY gear. This function of removing drudgery is the capacity in which I feel that computers will make their major impact on amateur radio, much as they have already done in the business world.

Since what I will do here is develop the computer program for the Stark method of filter design, you should read that article thoroughly before going any further. Rather than reproduce his diagrams and tables, I will simply refer to them and only show the ideas that were necessary to convert his graphical approach into a computer solution.

Design of the Program

The only real problem with computerizing the Stark method is deriving the mathematical equations necessary to solve for the center frequency and Q value of each stage in the filter. The graphical method for this part of the design is shown in Stark's Fig. 6. My Fig. 1 shows a diagram that can be used for the derivation. This diagram is the same basic one as Stark's Fig. 6, but uses variables instead of specific numbers. In this diagram, F is the center frequency for the whole filter, S is the center frequency for one of the stages, and B is the bandwidth of the whole filter.

Using Fig. 1, trigonometry

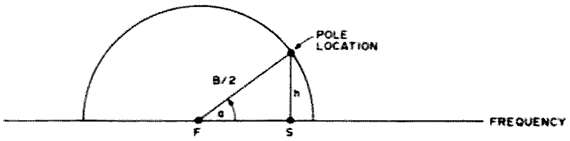

Fig. 1. Diagram for pole location derivation.

tells us that:

$$S = F + \frac{B}{2}\cos a \quad (1)$$

where a gives the angle in degrees from the horizontal axis counterclockwise to the location of a particular pole. The values of the variable a are given in Stark's Fig. 7, except that his numbers must be converted to counterclockwise angles from the horizontal so that the formula works properly. This is easily done. For example, the pole location angles for the 4-pole filter would be 45° and 135°, for the 6-pole filter 30°, 90°, and 150°, etc.

In the example used by Stark, a 6-pole filter is being designed for a center frequency (F) of 2200 Hertz with a bandwidth (B) of 260 Hertz. Thus the center frequencies for the three filter stages are:

$$S_1 = 2200 + \frac{260}{2}\cos(150° + 3°) = 2084.17.$$

$$S_2 = 2200 + \frac{260}{2}\cos(90° + 3°) = 2193.20.$$

$$S_3 = 2200 + \frac{260}{2}\cos(30° + 3°) = 2309.03.$$

The 3° addition to each of the pole location angles is the Finagle Factor given by Stark in Table 2. As can be seen, the results of these calculations agree closely with Stark's graphical results. The graphical results are, of course, only approximations of the true values given by the equations.

The Q values for each stage can be derived using the fact that the pole locations are all on a semicircle above the horizontal axis. The equation of this semicircle is:

$$h = \sqrt{\left(\frac{B}{2}\right)^2 - (S - F)^2}$$

where h is the height of the semicircle in Hertz above the horizontal axis at a frequency of S Hertz. The variables B and F are defined as before. Stark gives the Q value for each stage as center frequency for the stage divided by twice the semicircle height above the horizontal axis. Thus,

$$Q = \frac{S}{2\sqrt{\left(\frac{B}{2}\right)^2 - (S - F)^2}} \quad (2)$$

where S must be calculated from equation 1. For the Stark example, the Q values of the three stages are:

$$Q_1 = \frac{2084.17}{2\sqrt{\left(\frac{260}{2}\right)^2 - (2084.17 - 2200)^2}} = 17.66.$$

$$Q_2 = \frac{2193.20}{2\sqrt{\left(\frac{260}{2}\right)^2 - (2193.20 - 2200)^2}} = 8.45.$$

$$Q_3 = \frac{2309.03}{2\sqrt{\left(\frac{260}{2}\right)^2 - (2309.03 - 2200)^2}} = 16.31.$$

Again, the calculated values, which are exact, agree closely with the values obtained by means of the graphical method.

Given the center frequencies and Q values for each stage of the filter, all that is left to do is to use the appropriate set of equations from the second and third columns on page 39 of the Stark article to determine the required resistances. The first set is used for Q values less than 10; the second set is for Q values between 10 and 50.

Only two additional pieces of information are necessary — the value of the capacitor for each stage of the filter and the gain of the stage. Stark recommends setting the capacitor value to either 0.1 or 0.01 uF, so that potential problem is easily solved. The gain, however, is somewhat more of a problem. Here Stark recommends a small gain, say a gain of two, for the single op amp filter. For the two op amp filter, the suggestion is for a gain between two and five times the square root of the stage Q. I have picked a gain of three times the square root of Q for use in the program. This value conforms to the numerical examples given in Stark's article.

```
1 REM BUTTERWORTH ACTIVE FILTER DESIGN PROGRAM
2 REM
5 DIM C(11),N(4,5)
10 P1=3.14159265
15 FOR I=1 TO 4
20      FOR J=1 TO I+1
25      READ N(I,J)
30      NEXT J
35 NEXT I
40 FOR I=1 TO 11
45 READ C(I)
50 NEXT I
55 PRINT "ENTER RESONANT FREQ,# POLES,BANDWIDTH,CAPACITOR VALUE";
60 INPUT F,P,B,C1
61 IF INT(P/2) <> P/2 THEN 55
62 IF P/2 < 2  OR P/2 > 5 THEN 55
65 C1=C1*1.0E-6
70 F1=B/(3*F)
75 FOR I=1 TO 11
80 IF F1 < C(I) THEN 100
85 NEXT I
90 PRINT "WILL USE HIGHEST FINAGLE REGION"
95 I=11
100 F2=I-1
105 PRINT
110 PRINT "3 DB BANDWIDTH IS ";F-B/2;" TO ";F+B/2;" HZ"
115 PRINT
120 FOR I=1 TO P/2
122 PRINT "FILTER STAGE ";I
125 S=B/2*COS(P1*(N(P/2-1,I)+F2)/180)+F
130 Q=S/(2*SQR(B**2/4-(S-F)**2))
135 PRINT
137 PRINT
140 IF Q < 10 THEN 160
145 IF Q <= 50 THEN 200
150 PRINT "PROGRAM CANNOT HANDLE Q > 50"
155 GO TO 290
160 REM 2-POLE FILTER FOR Q < 10
162 G=2
165 X=Q/(2*P1*S*C1)
170 PRINT "R1 = ";X/G
175 PRINT "R2 = ";2*X/(2*Q**2-G);" POT FOR CENTER FREQ ADJUST"
180 PRINT "R3 = ";2*X
185 PRINT "R4 = ";2*X
190 PRINT "C  = ";C1*1.0E6;" UF"
192 PRINT "GAIN=";G
193 PRINT "FREQ=";S
194 PRINT "Q    =";Q
195 PRINT
196 PRINT
198 GO TO 258
200 REM 2-POLE FILTER FOR 10 <= Q <= 50
202 G=3*SQR(Q)
205 R1=Q/(2*P1*S*C1)
210 PRINT "R1 = ";R1
215 PRINT "R2 = ";2*R1/(Q**2-1-2*SQR(Q)/G+1/(G*SQR(Q)));
216 PRINT " POT FOR CENTER FREQ ADJUST"
220 PRINT "R3 = ";R1
225 PRINT "R4 = ";R1
230 PRINT "R5 = ";R1
235 R6=G*R1/SQR(Q)
240 PRINT "R6 = ";R6
245 PRINT "R7 = ";R1*R6/(R1+R6)
250 PRINT "R8 =";2*P1*G*SQR(Q)/(2*Q-1);" POT FOR Q ADJUST"
255 GO TO 190
258 PRINT "HIT CR TO CONTINUE";
259 INPUT A$
260 NEXT I
261 PRINT "ANOTHER DESIGN (Y OR N)";
262 INPUT A$
263 IF A$ = "Y" THEN 55
265 DATA 135,45
270 DATA 150,90,30
275 DATA 157.5,135,45,22.5
280 DATA 165,150,90,30,15
285 DATA 0.01,0.025,0.04,0.06,0.08,0.1,0.11,0.13,0.15,0.17,0.19
290 END
```

Fig. 2. Imsai 8080 BASIC program listing.

Program Description

The program, written in Imsai BASIC, is shown in Fig. 2. It is logically divided into three sections. The first section extends from line 1 through line 115. In this section, all variables needed to perform design calculations are defined. Lines 15-35 define the doubly subscripted array N using the pole location data from lines 265-280. Each data line gives the location (in degrees) of each pole for one of the filter types. The four types are 4-pole, 6-pole, 8-pole, and 10-pole. Thus, if P is the number of poles desired, row (P/2) -1 of the array N gives the P/2 pole locations necessary for the filter. For example, for a P = 6-pole filter, the P/2 = 3 pole locations from data statement 270 are located in the (P/2)-1 = 2nd row of the array N. While this scheme may seem complex, it makes the calculation part of the program much simpler than it otherwise would be.

Lines 40-50 define an array C with the data from line 285. These numbers are the upper bounds of the Finagle Factor regions, as de-

Scalar	Stands for	References
AS	Alphabetic information.	259, 262, 263
B	Bandpass of whole filter.	60, 70, 110, 125, 130
C1	Capacitor value — .1 or .01 uF.	60, 65, 165, 190, 205
F	Center frequency of filter.	60, 70, 110, 125, 130
F1	Index to Finagle Factor.	70, 80
F2	Finagle Factor.	100, 125
G	Gain of filter stage.	162, 170, 175, 192, 202, 215, 235, 250
I	Index for loop control.	15, 20, 25, 35, 40, 45, 50, 75, 80, 85, 95, 100, 120, 122, 125, 260
J	Index in nested loops.	20, 25, 30
P	Number of poles in filter.	60, 61, 62, 120, 125
P1	Pi = 3.141592654.	10, 125, 165, 205
Q	Q value of filter stage.	130, 135, 140, 145, 165, 175, 194, 202, 205, 215, 235, 250
R1	Resistor value.	205, 210, 215, 220, 225, 230, 235, 245, 250
R6	Resistor value.	235, 240, 245
S	Center frequency of filter stage.	125, 130, 135, 165, 193, 205
X	Temporary storage.	165, 170, 175, 180, 185
Array		
C(.)	List of upper boundaries of Finagle Factor regions.	5, 45, 80
N (.,.)	List of pole positions for each type of filter.	5, 25, 125

Fig. 3. List of variables, definitions, and references.

fined in Table 2 of the Stark article.

Lines 55-65 define, by means of a prompt sequence, the center frequency (F) for the filter, the number of poles (P) desired in the design, the desired bandwidth (B), and the value of the capacitor (C1) in microfarads. Line 65 converts C1 into farads.

After checking to make sure the number of poles desired is valid (line 61 rejects P if it is not an even number; line 62 rejects P if it is not 4, 6, 8, or 10) and converting C1 to farads, the program calculates the Finagle Factor in lines 70-100. The logic is to look at the upper ends of the eleven Finagle regions and determine the lowest upper end that the quantity F_1 = B/3F is less than. If this quantity is less than the "Ith" upper boundary, then the Finagle Factor is I - 1 degrees. For example, if F_1 is less than the third upper boundary (0.04), then the Finagle Factor is 2°. If F_1 is not less than 0.19, the upper boundary of the top region, a warning is printed out, and the top Finagle Factor is used. Here again, the logic is a bit tricky, but this pays off later when it is time to do calculations.

The first part of the program ends with the printout of the 3 dB bandwidth in Hertz in line 110. This printout is helpful in spotting errors in the data as entered.

The second part of the program performs the design calculations and includes lines 120-260. This part of the program is one large loop which is repeated for each pole location in the filter. Thus the loop index in line 120 goes from 1 to P/2.

Line 125 calculates the center frequency (S) for each stage in the filter, as explained above. If the design is for a P pole filter, then the appropriate pole location angle is N(P/2-1,I) for the "Ith" stage of the filter. Since the pole location angle must be modified by the Finagle Factor (F_2), the modified location is N (P/2-1,I) + F_2. Finally, since, in BASIC, trigonometric functions must

```
ENTER RESONANT FREQ,# POLES,BANDWIDTH,CAPACITOR VALUE ? 2200, 6, 260, 0.01

3 DB BANDWIDTH IS  2070   TO  2330   HZ

FILTER STAGE  1

R1 =  130123
R2 =  900.5   POT FOR CENTER FREQ ADJUST
R3 =  130123
R4 =  130123
R5 =  130123
R6 =  390368
R7 =  97591.9
R8 =  402162   POT FOR Q ADJUST
C  =  1E-2   UF
GAIN= 12.3869
FREQ= 2085.22
Q  = 17.0484

FILTER STAGE  2

R1 =  30625.6
R2 =  870.162   POT FOR CENTER FREQ ADJUST
R3 =  122502
R4 =  122502
C  =  1E-2   UF
GAIN= 2
FREQ= 2195.46
Q  = 8.4493

FILTER STAGE  3

R1 =  115515
R2 =  826.543   POT FOR CENTER FREQ ADJUST
R3 =  115515
R4 =  115515
R5 =  115515
R6 =  346546
R7 =  86636.5
R8 =  357197   POT FOR Q ADJUST
C  =  1E-2   UF
GAIN= 12.2846
FREQ= 2310.25
Q  = 16.7679

ANOTHER DESIGN (Y OR N)? Y
ENTER RESONANT FREQ,# POLES,BANDWIDTH,CAPACITOR VALUE ? 2550, 6, 1100, 0.01

3 DB BANDWIDTH IS  2000   TO  3100   HZ

FILTER STAGE  1

R1 =  18890.1
R2 =  1682.72   POT FOR CENTER FREQ ADJUST
R3 =  75560.4
R4 =  75560.4
C  =  1E-2   UF
GAIN= 2
FREQ= 2040.07
Q  = 4.84272

FILTER STAGE  2

R1 =  7306.21
R2 =  3514.99   POT FOR CENTER FREQ ADJUST
R3 =  29224.8
R4 =  29224.8
C  =  1E-2   UF
GAIN= 2
FREQ= 2473.46
Q  = 2.27094

FILTER STAGE  3

R1 =  11750.5
R2 =  1276.75   POT FOR CENTER FREQ ADJUST
R3 =  47002.1
R4 =  47002.1
C  =  1E-2   UF
GAIN= 2
FREQ= 2983.41
Q  = 4.40534

ANOTHER DESIGN (Y OR N)? N
```

Fig. 4. Sample run session using the two examples given in the Stark article.

have their argument expressed in radians rather than in degrees, this quantity must be multiplied by $\pi/180$. Line 125 is the resulting calculation.

The Q value for this stage of the filter is the center frequency (S), as just calculated, divided by twice the height of the circle above S. Line 130 performs this calculation.

Following these two calculations, the remainder of this part of the program is straightforward. Depending on whether the Q value as just calculated is less than 10 or between 10 and 50, the program jumps to the calculation and printing of the resistor values for a one or two op amp filter stage. The equations used are the ones given in the Stark article in columns two and three on page 39.

The only decision left at this point is the value of the gain (G) for each stage. As mentioned above, Stark uses a gain of two for single op amp filter stages and that convention was upheld in this program in line 162. A gain of two to five times the square root of the stage Q is suggested for two op amp stages. Line 202 sets the gain to three times the square root of Q for these stages. This can be modified as desired.

The third part of the program consists of data lines 265-285. Since these numbers have already been discussed above, no further commentary is necessary here.

Fig. 3 defines all the variables used in the program and gives the line number(s) in which the variables are used. This information should be of help to anyone who wishes to delve more deeply into the mechanics of the calculations.

A Sample Run Session

I have used the two examples worked out by Stark to illustrate the running of the filter design program. The inputs to these two runs are shown in Table 1. Fig. 4 presents the run session in detail.

What will be immediately obvious from the results presented is that the exact resistor values required for the design will not be available. Thus you must select the standard resistor value closest to the exact value given by the program. To compensate for this deviation from the required resistances, the values of R_2 in the single op amp filter and R_2 and R_8 in the two op amp stages are doubled, and the nearest standard pot is selected for these resistors. These pots allow the center frequencies and Q values of each stage to be set precisely. All resistor values are expressed in Ohms, and the use of pots is noted on the output.

A nifty and not too difficult modification to the program would be to have the computer select and print the nearest standard value resistors rather than the exact design values. I would have built this feature into the original program except for

	Run 1	Run 2
F	2200 Hz	2550 Hz
B	260 Hz	1100 Hz
P	6	6
C1	0.01 μF	0.01 μF

Table 1.

the difficulty of locating a comprehensive list of standard resistor and pot values. I will be glad to make this change for anyone who will send me such a list, an SASE, and $1 to cover duplication costs.

Summary

Active filters have a number of advantages over their LC counterparts. While the original Stark article provides a workable scheme for designing active bandpass filters, the graphical solution suffers from the lack of precision inherent in all graphical solutions. Since it is so easy to computerize the design process, we may as well give the computer one more task to perform for us. Maybe computers actually can be useful to the radio amateur! ■

Now Anyone Can Afford A Keyboard

—surplus keyboard, KIM, and software

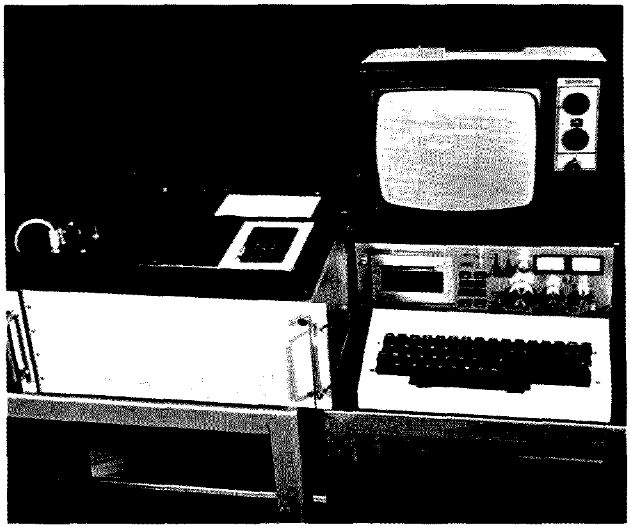

John Eaton
1126 N. 2nd
Vincennes IN 47591

One of the best methods of inputting alphanumeric data to a computer system is with a typewriter-style keyboard. It has proven itself an effective man-machine interface and can be found on a multitude of systems from the smallest micro to the largest IBM.

A low-cost 63-key non-encoded keyboard is available from many computer distributors for under $20. It is essentially a 63 single-pole-single-throw (SPST) N.O. switch matrix that is lettered and arranged as a keyboard. This article describes a method to interface this type of keyboard to an I/O port using two TTL ICs. A software listing that uses this keyboard to control a 16 x 64 video board is also given. A block diagram of the system is shown in Fig. 1.

This interface uses software instead of hardware to

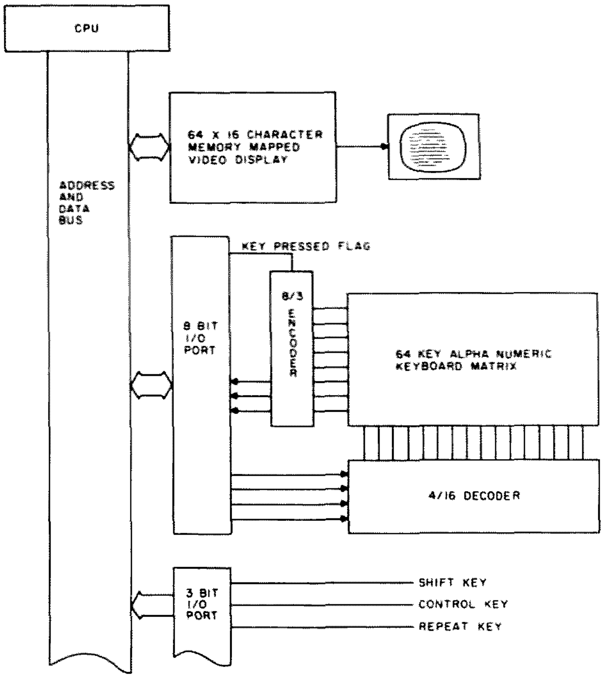

Fig. 1. System block diagram.

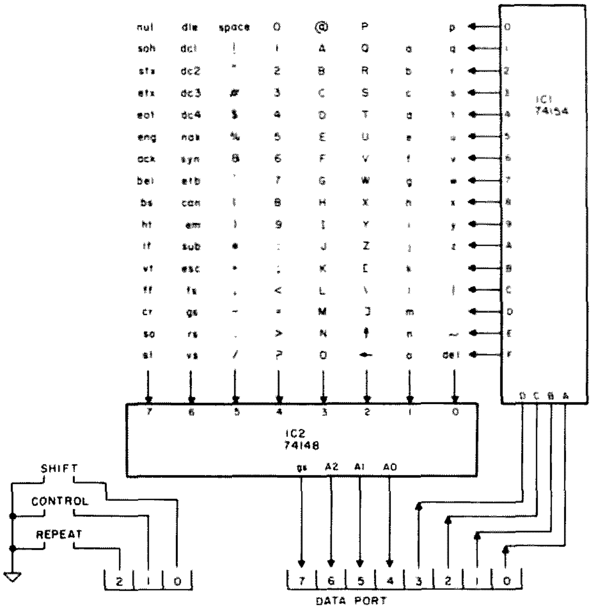

Fig. 2. Keyswitch matrix diagram showing all 128 functions and alphanumeric characters available.

perform many of the keyboard functions. It requires a great deal more CPU time than an interrupt-driven system, but it can be built using less hardware. Since software costs time, and hardware costs money, it is more economical to use software.

How Does It Work?

To understand how the interface works, imagine a keyboard with 128 keys that represent the entire ASCII character set. This keyboard could be wired as a 16 x 8 matrix, as shown in Fig. 2. (Fig. 3 illustrates my configuration and interface to my KIM.) Data is passed through an 8-bit bidirectional peripheral port. The four low-order bits are set as outputs and connect to a four/sixteen decoder (IC1). By writing a number from 0_H-F_H into the data port, the CPU can cause any one of the sixteen output lines of IC1 to drop to 0. If a key that is connected to the selected line is pressed, then the 0 from IC1 will be connected to one of the eight inputs of IC2. IC2 will then output a 3-bit binary number from 000-111 to indicate exactly which one of the eight input lines is low. At the same time, pin gs outputs a low whenever any one of the input pins is low. By connecting this pin to the data port bit 7, the CPU can test it to see if a key is pressed. If it is, then the four output bits combined with the three input bits give a 7-bit number that indicates which one of the 128 switches is pressed.

To test the entire keyboard, the CPU must continuously increment the lower four bits and test bit 7 for a low. When a low is

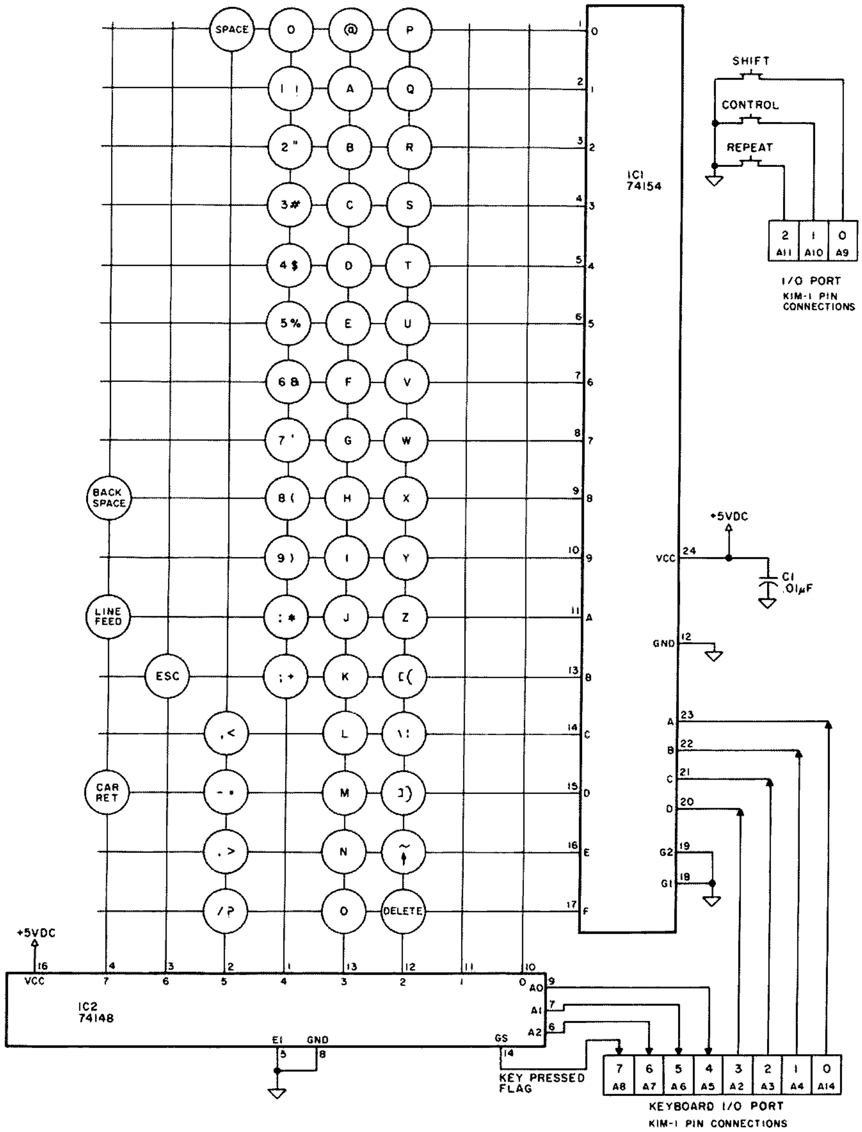

Fig. 3. Configuration for 48 characters (with KIM-1 interface information).

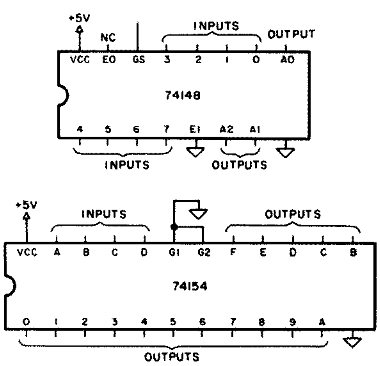

Fig. 4. Pinout diagram of ICs used.

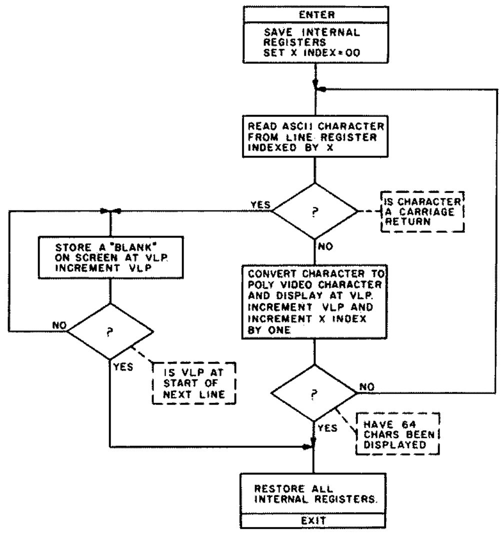

Flowchart A. The software "Big Picture."

KEY	IC1 pin	IC2 pin	Normal code	Shift code	Control code
@	0	3	40	60	00
A	1	3	41	61	01
B	2	3	42	62	02
C	3	3	43	63	03
D	4	3	44	64	04
E	5	3	45	65	05
F	6	3	46	66	06
G	7	3	47	67	07
H	8	3	48	68	08
I	9	3	49	69	09
J	A	3	4A	6A	0A
K	B	3	4B	6B	0B
L	C	3	4C	6C	0C
M	D	3	4D	6D	0D
N	E	3	4E	6E	0E
O	F	3	4F	6F	0F
P	0	2	50	70	10
Q	1	2	51	71	11
R	2	2	52	72	12
S	3	2	53	73	13
T	4	2	54	74	14
U	5	2	55	75	15
V	6	2	56	76	16
W	7	2	57	77	17
X	8	2	58	78	18
Y	9	2	59	79	19
Z	A	2	5A	7A	1A
[{	B	2	5B	7B	1B
\ ¦	C	2	5C	7C	1C
] }	D	2	5D	7D	1D
↑ ~	E	2	5E	7E	1E
DEL	F	2	5F	7F	1F
0	0	4	30	20	
1 !	1	4	31	21	
2 "	2	4	32	22	
3 #	3	4	33	23	
4 $	4	4	34	24	
5 %	5	4	35	25	
6 &	6	4	36	26	
7 '	7	4	37	27	
8 (	8	4	38	28	
9)	9	4	39	29	
: *	A	4	3A	2A	
; +	B	4	3B	2B	
, <	C	5	2C	3C	
- =	D	5	2D	3D	
. >	E	5	2E	3E	
/ ?	F	5	2F	3F	

Table I. Table of connections for 48 keys showing ASCII codes produced when keys are pressed.

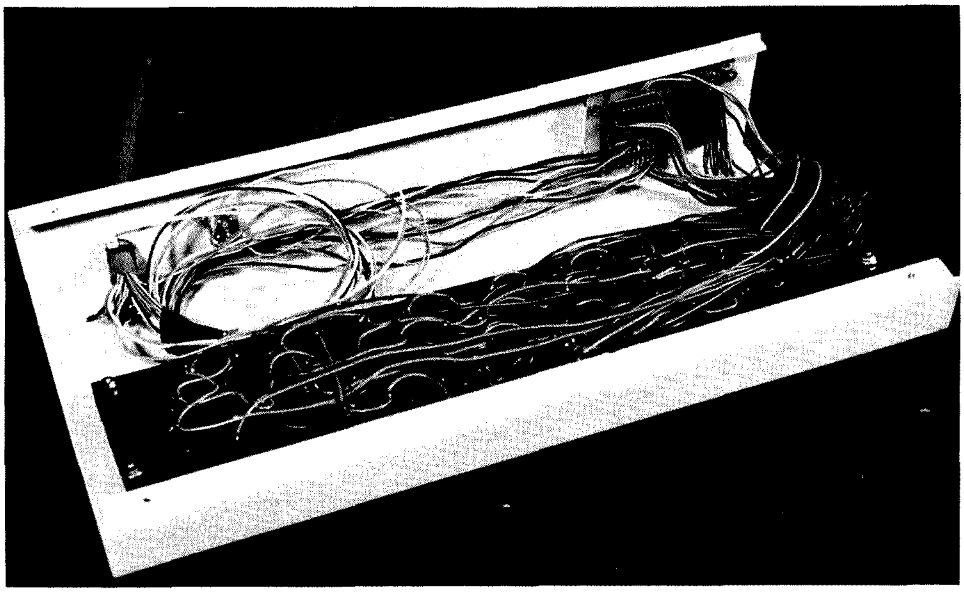

Photo B. The hard part — wiring the keyboard.

found, the 7-bit ASCII code can be directly loaded from the port.

Since 128-key terminals are relatively scarce and hard to use, most of us use a 64-key terminal with shift and control keys. Figs. 2 and 3 show how these two keys can be connected to another I/O port so that the CPU can test them. Table 1 lists 48 common keys of a 64-key terminal and shows where they can be connected in the matrix. The ASCII code shown in the normal column is produced when that key is pressed. The software used with this interface will also test the shift and control keys. If they are pressed, it will mathematically shift the code and produce the codes shown in the shift and control columns. This way, the 48 keys, when used in conjunction with the shift and control keys, will produce all 128 ASCII combinations.

This system by itself can be awkward to use. Even though a carriage return (ASCII 0D) can be produced by pressing M and Control, most of us would prefer to use a separate key. Any of the codes produced by shift and control keys can be wired to a separate key just by placing the key in the matrix. Fig. 2 shows the lines needed to connect any of the keys to IC1 and IC2. You must be aware that IC2 actually inverts the output bits, so, when line 0 is pulled low, it outputs a 111. To correct for this, the lines are wired in reverse. To connect a carriage return key, wire the switch to the D output of IC1 and the 7 input of IC2. Often-used codes like space, carriage return, line feed, delete, and backspace should be wired directly to the matrix for ease of operation.

The Software

Since this system is software-controlled, I am including a detailed hand-assembled listing of the input/output for my KIM-1

Line register — A 64-byte area of RAM in page 0 used to hold one line of ASCII characters. Both the input and output subroutines use the same line register.

Memory mapped video display — A video display board that looks like a section of read/write RAM to the CPU. A 16 x 64 video display uses 1024 bytes of memory space. Each address corresponds to a unique location on the screen. Writing an ASCII character to a video address will cause that character to appear on the screen.

Video line pointer — Two consecutive bytes in page 0 RAM that contain the 16-bit address of the screen location currently being filled.

Cursor — A white block that appears on the screen to show where the next typed character is to be placed. The cursor is turned on by saving the character at the cursor location in memory and then storing an FF on the screen. It is turned off by retrieving the old character from memory and writing it back on the screen in its old location.

Table 2. Definitions.

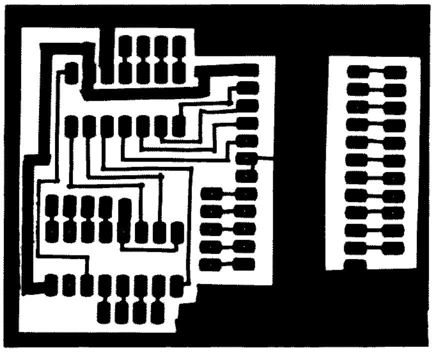

Fig. 5. PC board artwork.

0200	20	00	20	LOOP	JSR	LINEIN
0203	4C	00	02		JMP	LOOP

Table 3.

0200	20	00	20	LOOP	JSR	LINEIN
0203	20	8D	20		JSR	LINEOT
0206	4C	00	02		JMP	LOOP

Table 4.

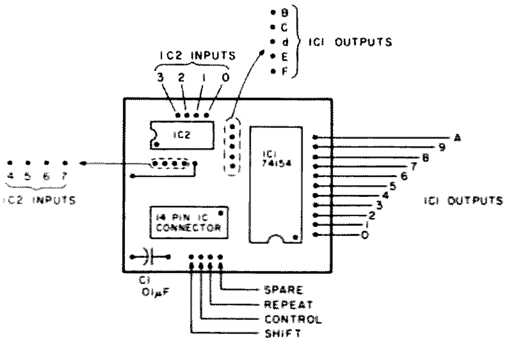

Connections to 14 pin connector from KIM-1.

1 PA0	KA-14
2 PA1	KA- 4
3 PA2	KA- 3
4 PA3	KA- 2
5 PA4	KA- 5
6 PA5	KA- 6
7 PA6	KA- 7
8 PA7	KA- 8
9 + 5 V dc	KA- A
10 Ground	KA- 1
11 PB0	KA- 9
12 PB1	KA-10
13 PB2	KA-11
14 PB3	KA-12

KA = KIM applications connector

Fig. 6. PC board component layout and KIM-1 application connector interface.

(Program A). This also controls a video display board. It is written for an MOS 6502 and is currently running on my system. General and specific flowcharts are provided for those who would like to incorporate this technique into another system.

The software contains two main subroutines:

LINEIN: Scans the keyboard and accepts up to 64 characters which are to be displayed on the screen. The ASCII codes are stored in page 0, starting at 0000 for use by the calling routine.

LINEOT: Displays the ASCII characters starting at 0000. It will display 64 characters unless a CAR RET (0D) is found.

The video line used for both programs depends on the address in the video line pointer (00ED, 00EE). This should be set to the starting address of the video memory. The subroutines will update it.

Using the input subroutine is simple. When the cursor appears, it means that the subroutine has been called and is requesting data. You may type in up to 64 characters. If you press the repeat key by itself, the cursor will

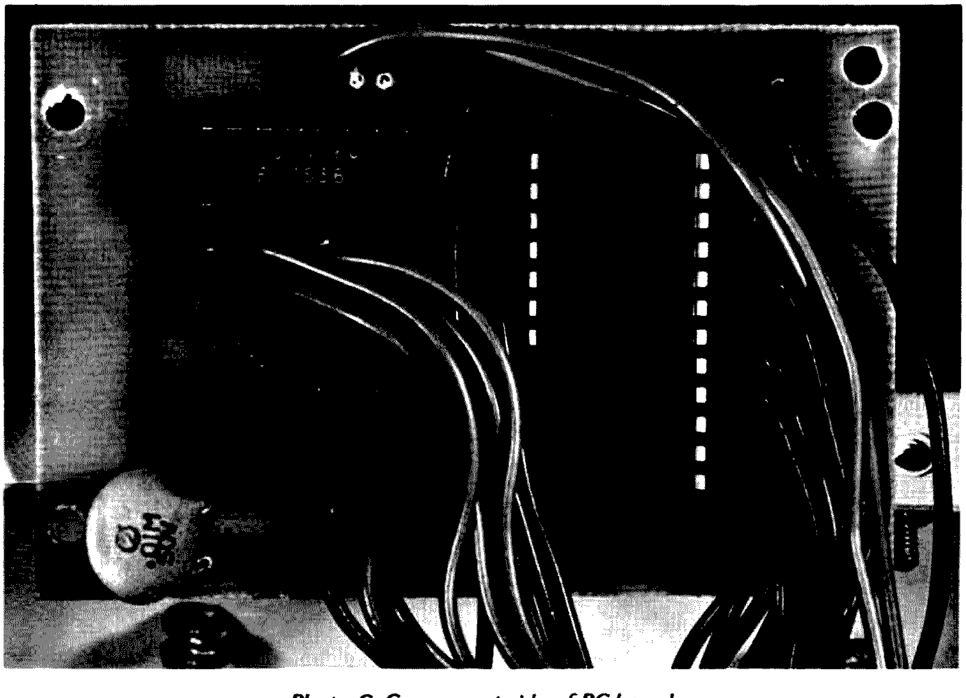

Photo C. Component side of PC board.

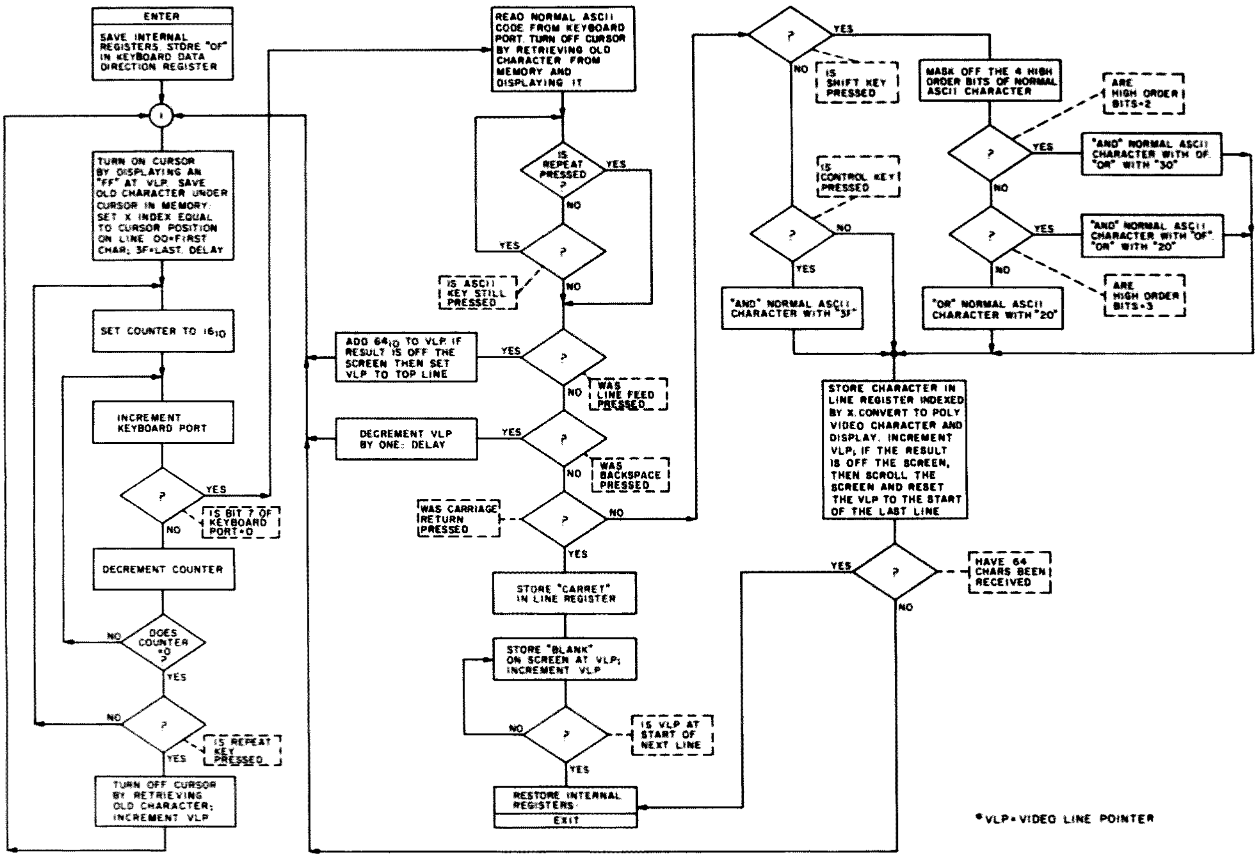

Flowchart B. Detailed flowchart for keyboard "encoding" and display of characters.

move to the right without changing any of the video. Pressing any other key along with the repeat key will continuously input the selected key onto the screen. Backspace will move the cursor to the left but will not change any of the video. Line feed will cause the cursor to move down one line. If a line feed occurs on the bottom line, the cursor will jump to the top of the page. Car Ret will cause the rest of the line from the cursor to the right edge of the screen to be blanked out. The cursor will be reset to the start of the next line, and control is returned to the calling program.

If the cursor was on the bottom line, then the display is scrolled up one line. The input subroutine will set the video line pointer to the next available line and leave the cursor off.

To use the output subroutine, the ASCII characters that you wish to display will be in page 0, starting at 0000. If there are fewer than 64 characters, a termination of 0D should be used. Then jump into subroutine LINEOT. The characters will be displayed on the line selec-

Program A. Source listings for KIM-1 or other 6502-based processor.

```
0000                    LR                       Line register 64 bytes
0080                    TEMP                     RAM scratch pad 4 bytes
0084                    CURSOR                   Storage for character in cursor position
00ED                    VIDLINlo                 Video line  [2
00EE                    VIDLINhi                 pointer     [Bytes
1700                    PORTS                    Data I/O ports
2000  48                LINEIN    PHA            Save A, X,Y
2001  8A                          TXA
2002  48                          PHA
2003  98                          TYA
2004  48                          PHA
2005  A0  00                      LDY#00         Set up index registers
2007  A9  0F                      LDA#0F         Set up data direction registers
2009  8D  01  17                  STA PORTS+1
200C  B1  ED            START     LDA(VIDLIN),Y  Turn on the cursor by saving the char
200E  85  84                      STA CURSOR     in the cursor's position and storing
2010  A9  FF                      LDA#FF         an FF on the screen
2012  91  ED                      STA(VIDLIN),Y
2014  20  F0  20                  JSR DELAY
2017  20  C2  20                  JSR SETX       Set X index to the cursor position 00-3F
201A  20  AC  20        SCAN      JSR GETASC     Test for a pressed key
201D  A5  80                      LDA TEMP
201F  10  11                      BPL PROC       Branch if key was pressed
2021  AD  02  17                  LDA PORTS+2    Test for a repeat key
2024  29  04                      AND#04
2026  D0  F2                      BNE SCAN       Branch if repeat was not pressed
2028  A5  84                      LDA CURSOR     Turn the cursor off by retrieving the
202A  91  ED                      STA(VIDLIN),Y  previously stored char
202C  20  C8  20                  JSR NEXCHA     Increment the video line pointer
202F  38                          SEC
2030  B0  DA                      BCS START      Relative jump
2032  A5  84            PROC      LDA CURSOR     Turn cursor off
```

Continued.

April 1978

```
2034   91  ED              STA(VIDLIN),Y
2036   AD  02  17  PROC1   LDA PORTS+2     Test for repeat key
2039   29  04              AND#04
203B   F0  05              BEQ CONT        Branch if repeat key is pressed
203D   AD  00  17          LDA PORTS       If repeat key is not pressed, then loop
2040   10  F4              BPL PROC1       until the ASCII key is released
2042   A5  80      CONT    LDA TEMP        Fetch the ASCII char normal code
2044   C9  08              CMP#08          Test for backspace
2046   D0  08              BNE CON1
2048   C6  ED              DEC VIDLINlo    Backspace routine, decrements video pointer
204A   20  F0  20          JSR DELAY
204D   38                  SEC
204E   B0  BC              BCS START
2050   95  00      CON1    STA LR,X        Store the char in line register
2052   C9  0D              CMP#0D          Test for CAR RET
2054   F0  2A              BEQ CART        Branch on a CAR RET
2056   C9  0A              CMP#0A          Test for a line feed
2058   D0  06              BNE CON2        Branch if not a line feed
205A   20  DE  20          JSR NEXLIN
205D   38                  SEC
205E   B0  AC              BCS START
2060   09  80      CON2    ORA#80          Convert to Poly ASCII char
2062   91  ED              STA(VIDLIN),Y   Display the character
2064   AD  02  17          LDA PORTS+2     Test for SHIFT or CONTROL keys
2067   29  03              AND#03
2069   C9  03              CMP#03
206B   F0  03              BEQ OUT         Branch if no SHIFT or CONTROL
206D   20  28  21          JSR SHIFT
2070   20  C8  20  OUT     JSR NEXCHA      Point video pointer to next position
2073   20  C2  20          JSR SETX        Set X to char position 00-3F
2076   E0  00              CPX#00          Test for 64 chars
2078   D0  92              BNE START       Branch if less than 64 chars received
207A   68          EXIT    PLA             Restore ACCUMULATOR and INDEX REGs
207B   A8                  TAY
207C   68                  PLA
207D   AA                  TAX
207E   68                  PLA
207F   60                  RTS             Return to calling routine
2080   A9  3F      CART    LDA #3F         Load a blank (Polygraphics char)
2082   91  ED              STA(VIDLIN),Y   Display a blank
2084   20  C8  20          JSR NEXCHA
2087   25  ED              AND VIDLINlo    Mask the lo order byte of the video
2089   D0  F5              BNE CART        pointer with 3F. If it is the end of
208B   F0  ED              BEQ EXIT        line, then the result will be 00
208D   48          LINEOT  PHA             Save A,X,Y
208E   8A                  TXA
208F   48                  PHA
2090   98                  TYA
2091   48                  PHA
2092   A0  00              LDY#00
2094   A2  00              LDX#00
2096   B5  00      LOOP    LDA LR,X        Fetch ASCII from line register
2098   C9  0D              CMP#0D          Test for CAR RET
209A   F0  E4              BEQ CART
209C   09  80              ORA#80          Convert to Poly ASCII char
209E   91  ED              STA(VIDLIN),Y   Display the character
20A0   20  C8  20          JSR NEXCHA
20A3   20  C2  80          JSR SETX        Set X to char position 00-3F
20A6   E0  00              CPX#00          Test for end of line (64 chars)
20A8   D0  EC              BNE LOOP        Branch if less than 64 chars
20AA   F0  CE              BEQ EXIT
20AC   8A          GETASC  TXA             Save X — This routine scans the keyboard
20AD   48                  PHA             16 times and returns ASCII key pressed
20AE   A2  10              LDX#10          in TEMP if no key then TEMP = FF
2080   EE  00  17  SRCH    INC PORTS
20B3   AD  00  17          LDA PORTS       Fetch ASCII code
20B6   10  05              BPL KP          Branch if key is pressed
20B8   CA                  DEX             Decrement counter
20B9   D0  F5              BNE SRCH        Branch if less than 16 loops completed
20BB   A9  FF              LDA#FF          No key was pressed
20BD   85  80      KP      STA TEMP        Save ASCII or FF
20BF   68                  PLA             Restore X
20C0   AA                  TAX
20C1   60                  RTS
20C2   A9  3F      SETX    LDA#3F          This routine sets the X index to the
20C4   25  ED              AND VIDLINlo    character position (value of 00-3F)
20C6   AA                  TAX
20C7   60                  RTS
20C8   48          NEXCHA P PHA            This routine advances the video line
```

Continued.

ted in the video line pointer, and all video from the end of your string to the right edge of the screen will be blanked out. The video line pointer will be incremented to the next available line.

This software is designed to work with a Polymorphics video board and requires that all ASCII codes have their high order bit set to one. The software will do this. All machine functions (ASCII 00-1F) are displayed in the Greek alphabet. Entering any alphabetic character causes the upper case to be displayed. Shifting it will cause the lower case to be displayed. The following memory allocations are used:

0000-003F	64-byte storage for ASCII characters being input or output.
00ED,00EE	Video line pointer (set to 00, 7C).
0080-0084	Scratch pad RAM used by the subroutines.
1700	Address of data port that keyboard is connected to.
1701	Data direction register for keyboard port.
1702	Address of data port that shift, control, and repeat keys use.
1703	Data direction register.
7C00-7FFF	Memory used by video board.

Construction

The circuit is constructed on a single-sided printed circuit board (5 cm x 6 cm). The keyboard was wired using point-to-point soldering. Wiring all the keys into their proper place on the matrix will be the most tedious part of the project. Take your time, and do it right the first time. All connections between the KIM-1 and the keyboard are made

```
20C9  E6  ED              INC VIDLINlo     pointer to the next position. If the
20CB  D0  0F              BNE END          result points to address 8000, the
20CD  E6  EE              INC VIDLINhi     screen is scrolled and the pointer
20CF  10  0B              BPL END          is set to 7FC0, which is the beginning
20D1  20  01  21          JSR SCROLL       of the last line.
20D4  A9  C0              LDA#C0
20D6  85  ED              STA VIDLINlo
20D8  A9  7F              LDA #7F
20DA  85  EE              STA VIDLINhi
20DC  68          END     PLA
20DD  60                  RTS
20DE  18          NEXLIN  CLC              This routine adds 64 to the video line
20DF  A5  ED              LDA VIDLINlo     pointer lo byte. If a carry is
20E1  69  40              ADC#40           generated, then the hi order byte is
20E3  85  ED              STA VIDLINlo     incremented. If the result is greater
20E5  A9  00              LDA#00           than 8000, then the hi order byte is
20E7  65  EE              ADC VIDLINhi     set to 7C, which places the cursor
20E9  10  02              BPL OUT1         on the top line.
20EB  A9  7C              LDA#7C
20ED  85  EE      OUT1    STA VIDLINhi
20EF  60                  RTS
20F0  48          DELAY   PHA              This routine provides a delay for
20F1  8A                  TXA              debouncing and slowing down the
20F2  48                  PHA              repeat function to human speeds.
20F3  98                  TYA              Total delay may be varied by changing
20F4  A0  40              LDY#40           the value in 20F5.
20F6  CA          DEL     DEX
20F7  D0  FD              BNE DEL
20F9  88                  DEY
20FA  D0  FA              BNE DEL
20FC  A8                  TAY
20FD  68                  PLA
20FE  AA                  TAX
20FF  68                  PLA
2100  60                  RTS
2101  84  80      SCROLL  STY TEMP
2103  A9  40              LDA#40
2105  85  82              STA TEMP+2       This routine scrolls the display by
2107  A9  7C              LDA#7C           setting up two pointers in RAM scratch
2109  85  81              STA TEMP+1       pad. They are spaced apart by 64 chars,
210B  85  83              STA TEMP+3       which is one line. A character is loaded
210D  B1  82      CONI1   LDA(TEMP+2),Y    from the high pointer value and stored
210F  91  80              STA(TEMP),Y      in the low pointer value and both are
2111  E6  80              INC TEMP         incremented. When the high pointer
2113  D0  02              BNE CONI2        is set to 8000, then the last line
2115  E6  81              INC TEMP+1       is blanked out, and the video line
2117  E6  82      CONI2   INC TEMP+2       pointer is set to 7FC0 (bottom line)
2119  D0  F2              BNE CONI1
211B  E6  83              INC TEMP+3
211D  10  EE              BPL CONI1
211F  A9  3F              LDA#3F           Load a Polygraphics blank
2121  91  80      CONI3   STA(TEMP),Y
2123  E6  80              INC TEMP
2125  D0  FA              BNE CONI3
2127  60                  RTS
2128  C9  01      SHIFT   CMP#01           This routine will SHIFT the ASCII char
212A  D0  06              BNE SHF          in TEMP and display it if the shift or
212C  A5  80              LDA TEMP         CONTROL KEY is pressed
212E  29  3F              AND#3F           Mask off lower 5 bits to convert to
2130  10  10              BPL OUT2         a control character
2132  A5  80      SHF     LDA TEMP         This section will shift a ASCII according
2134  29  70              AND#70           to the following:
2136  C9  20              CMP#20             2X====3X
2138  F0  0F              BEQ LO             3X====2X
213A  C9  30              CMP#30             4X====6X
213C  F0  13              BEQ HI             5X====7X
213E  A5  80              LDA TEMP         Section shifts a 4X,5X to a 6X,7X
2140  09  20              ORA#20
2142  95  00      OUT2    STA LR,X         The converted character is stored in
2144  09  80              ORA#80           the line register and displayed on
2146  91  ED              STA(VIDLIN),Y    the screen
2148  60                  RTS
2149  A5  80      LO      LDA TEMP         Section to shift a 2X to a 3X
214B  29  0F              AND#0F
214D  09  30              ORA#30
214F  D0  F1              BNE OUT2
2151  A5  80      HI      LDA TEMP         Section to shift a 3X to a 2X
2153  29  0F              AND#0F
2155  09  20              ORA#20
2157  D0  E9              BNE OUT2
```

through a single 14-pin DIP connector. Refer to Photos 2 and 3 along with Figs. 4, 5, and 6 for construction details.

System Checkout

The keyboard interface and video display software is designed to work with a KIM-1 with 512 bytes of memory at address 2000, and a Polymorphics video display device at address 7C00.

After loading the software into memory, set the video line pointer to the top left corner of the screen by storing 00, 7C at addresses 00ED and 00EE. Also, be sure that the decimal mode of the 6502 is cleared by storing 00 at address 00F1.

The input program can be tested by having it operate as a TV typewriter. Load and run the program shown in Table 3.

A cursor will appear in the upper left corner. Press the carriage return key along with the repeat key until the screen is blanked out and the cursor is on the bottom line. Press line feed to restore it to the top of the screen.

Typing on the keyboard will cause the cursor to move to the right and display what is typed. Try all keys along with the shift and control keys to see what symbols are produced by each key.

After typing a line, stop the program and examine the memory starting at address 0000. It should contain the ASCII codes for the line you just typed.

To test the LINEOT subroutine, you can modify the calling program at 0200 as shown in Table 4. Now every line that you type in will be echoed and appear twice on the screen.

The program responds best to short, quick strokes on the keyboard. If your typing is slow, you can avoid debouncing errors by changing the value at address 20F5. Raising it will slow down the program and provide more time to debounce the keystrokes. ■

Godbout Strikes Again

—ECONORAM: an outstanding value

Rod Hallen WA7NEV
P.O. Box 73
Tombstone AZ 85638

The name of the game is memory after your microprocessor is built. A computer with little or no memory is useless. My SOL system PC board came with 1K of RAM, and, after running simple assembly language programs for a while, I became anxious to try out the 5K BASIC tape that came with it.

About that time, a flyer arrived from Godbout Electronics* extolling the virtues of the new 8K static RAM memory board that they called ECONORAM II. I am leery of bargain-basement prices because I've found that you usually get what you pay for. But I've had many satisfactory dealings with Godbout, so I sent off my check for $163.84 (an odd price) and started watching my mailbox.

A two-week back order wasn't too disappointing, since I suspect that they received a lot of orders, but is 31 days (postmark to delivery date) reasonable parcel post service for a trip of less than a thousand miles? I will stick with UPS from now on!

What did I get for my money? A double-sided PC board with through-plated holes and a solder mask, a mountain of ICs, miscellaneous other components, and a data sheet. Everything was very good quality. The instructions were easy to follow, and the whole thing went together painlessly — that is, if you consider soldering 1200 IC socket pins painless.

Before I discuss how it worked, let's look at the features that are provided. The board is divided into two 4K blocks, and each block can be allocated to any address location you desire, using the two DIP switches mounted on the board. Placing all of the DIP switches off will disable the board when you want two boards to occupy the same memory location for some reason.

The memory normally operates with zero wait states (450 ns RAMs), but a slide switch is furnished for you Z-80 fans which will force one wait state for each memory operation. Another slide switch sets the board for use with or without a front panel.

There is also on-board protect circuitry and a vectored interrupt that will signal if an attempt is made to write into protected memory. These last two features require special hardware and software in your computer, but they are not needed for normal operation. Tristate outputs are provided.

After construction, I plugged the board in and

*Godbout Electronics, Box 2355, Oakland Airport CA 94614.

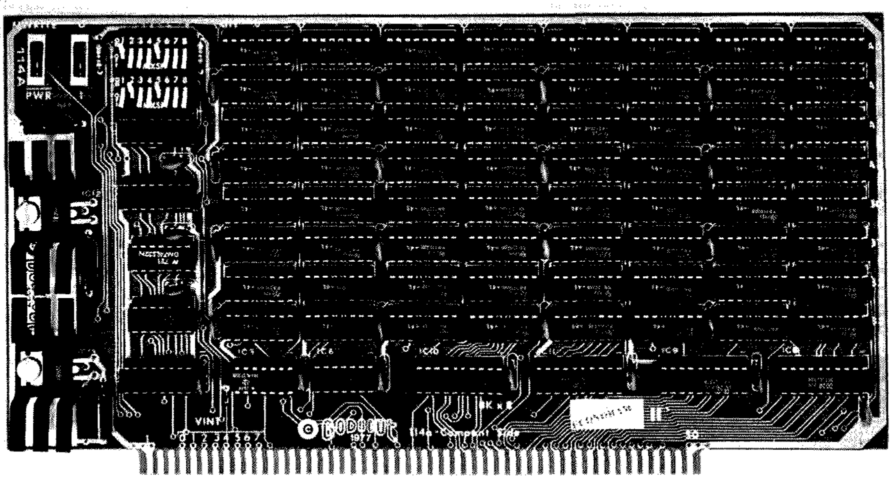

powered up. The board carries two 1-Amp, 5-volt regulators which appear to be adequate. Their heat sinks get very warm to the touch, but not uncomfortably so.

I tried my Memory Monitor II (a program that I wrote which will load a block of memory for testing purposes), and it immediately became apparent that something was wrong. I could only load alternate memory locations. For instance: 0000 would write and read, but 0001 would not. 0002 was okay, but not 0003, and so on – very strange.

After much fruitless testing, I took advantage of Godbout's offer of repair service and sent the board back. I received it back in two weeks with a note that they had found an open trace and two 2102 pins bent under instead of inserted in the socket. There was no charge for the repairs, but none of that solved the problem. In a phone conversation, the person I spoke to at Godbout said they were willing to look at the board again, although they were sure that it was OK.

It was still loading every other memory location, and I was now ready to blame it on my computer. A call to Processor Technology elicited the hint that the protect line on the 8K board was actually floating, since SOL does not use that feature. It would be better if the protect line were tied low (unprotected). With a short wire soldered from pin 12 to pin 10 of IC11, my problem was solved.

Another Godbout product which should be of interest to expansion-minded hobbyists is their ten-slot mother board. This board has active terminations on all S-100 control and data lines, and, while I'm not too familiar with this concept as yet, this seems to be popping up in other designs also.

Godbout advertises this item as a "ten-slot mother board," but it actually has provisions for eleven sockets, ten of which are provided. The eleventh slot is intended as a connection point for jumpers to the main board, or another socket can be purchased if you plan to use this board as a stand-alone microcomputer mounting, either in a cabinet or rack mounted.

I use my mother board with a SOL PC which has only one S-100 socket, so I was happy to get more plug-in space. Rather than give up the eleventh slot to a bunch of jumpers, I bought a wire-wrap socket, and, after soldering it in place, I wire-wrapped a fifty-pair cable to it. The other end of the cable I soldered to the traces on an extender board which I plug into the SOL. This gives me a total of twelve sockets. As an added convenience, I can plug any board that is giving me trouble into the extender board socket, and it stands up in the clear for testing various points on it.

The mother board is of very heavy construction, and there are fourteen mounting holes, which makes for a rigid finished product. The power traces are very wide, and this will help with current flow when it becomes heavily populated. Construction was very straightforward but tedious, as was the case with the 8K board, with more than twelve hundred connections to solder. Documentation was adequate, and a simple adjustment of the active termination circuit is all that is required after construction is finished.

The ten-slot mother board costs $90, and an eighteen-slot board is available for $124.

I now have 8K of reliable memory and a row of sockets to plug it and a few other goodies into. But, when I get ready to buy another memory board, I'll order the assembled version of ECONORAM II for $188.50, which is still a bargain. Above all, watch that protect line! ■

The Klingons Are Coming!

—new depth charge game

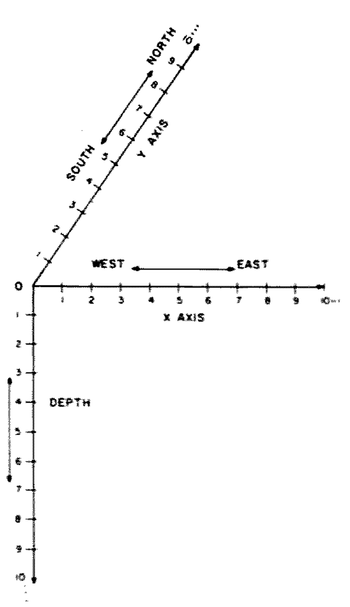

Fig. 1. Coordinate system.

Mark Herro WB9LSS
311 Woodlane Lane
Oconomowoc WI 53066

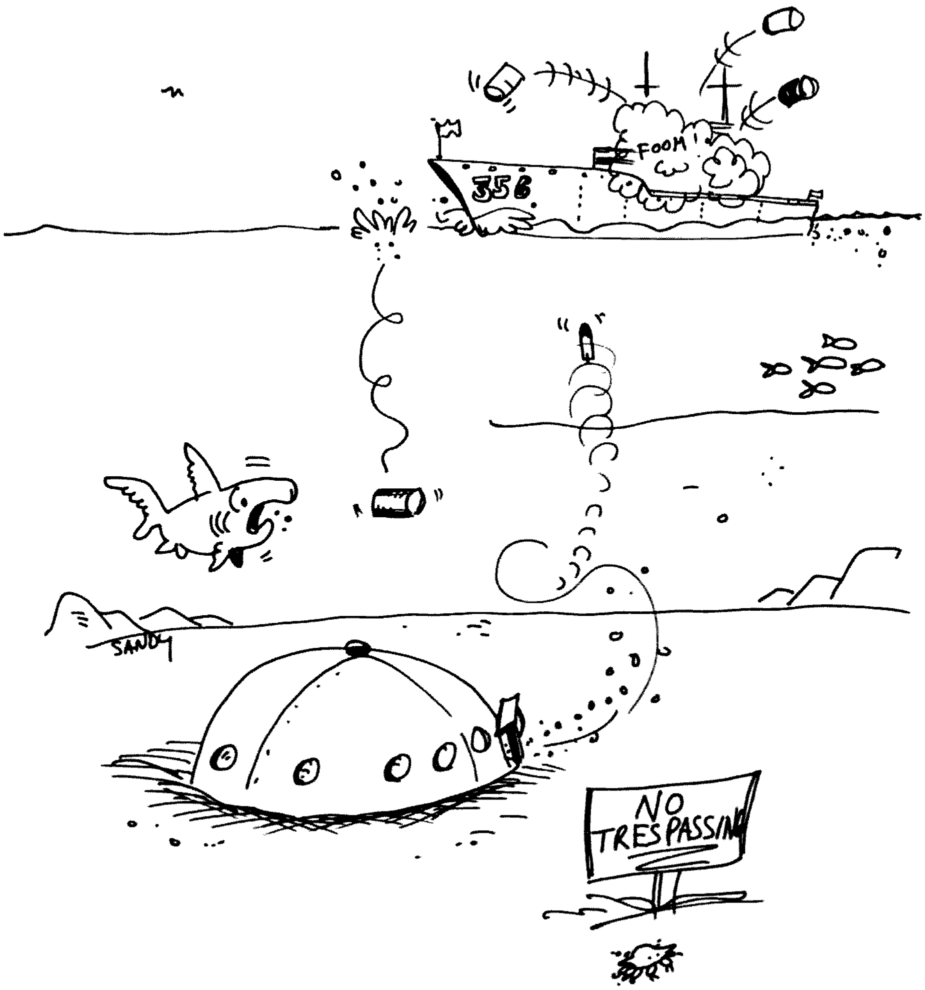

The idea for this article came, at least in part, from Pete Stark's "Submarine" game (*Kilobaud* #2, February, 1977) and a similar game that appeared in our school's time-sharing library some time ago. However, this program has several additional features that can make it very challenging.

Background

"Depth Charge" is written in BASIC for a Compucolor 8001 which has 8K of user memory. The program itself doesn't take up nearly that much. It uses probably half, so it should run on any machine with 4K of "play room."

Use of the Compucolor was generously donated by General Precision Electronics, Inc., in Watertown, Wisconsin, as, at the time, I didn't have access to our school's time-sharing terminal (no, I didn't get kicked out—school was out for the year).

The Game

Picture a coordinate sys-

```
THIS IS THE DEPTH CHARGE GAME
YOU ARE THE CAPTAIN OF A DESTROYER LOOKING FOR
THE EVIL KLINGON UNDERWATER TORPEDO BASE.

YOUR JOB IS TO DESTROY THE BASE  USING YOUR DEPTH
CHARGES BEFORE THE KLINGONS ZERO IN AND TORPEDO
YOU AND TAKE OVER THE SEAS


YOU MAY SPECIFY THE MAXIMUM SEARCH AREA BY GIVING
THREE NUMBERS--ONE FOR THE Y AXIS (NORTH/SOUTH),
THE X AXIS (EAST/WEST), AND DEPTH.
THE LARGER THE AREA THE MORE SHOTS YOU GET
BEFORE THE KLINGONS ZERO IN AND TORPEDO YOU


TO MAKE A SHOT, ENTER THE THREE NUMBERS (Y, X, DEPTH)
WHERE YOU THINK THE BASE IS.  THE SHIP'S SONAR
WILL REPORT BACK WHERE THE SHOT WAS IN RELATION TO
THE BASE.  GOOD LUCK!!!

MAXIMUM SEARCH AREA (Y, X, DEPTH)? 10,10,10

DETONATION COORDINATES? 5,5,5

SPLASH!
   I
   I
   I
   I
   I
   I
   I
   I
   I
   I
   I
   I
   I
   I
   I

   *----THUMP


NORTH
EAST
TOO HIGH

DETONATION COORDINATES? 3,3,7

SPLASH!
   I
   I
   I
   I
   I
   I
   I
   I
   I
   I
   I
   I
   I
   I
   I

   *----THUMP


NORTH
WEST
TOO HIGH

DETONATION COORDINATES? 1,4,10

SPLASH!
   I
   I
   I
   I
   I
   I
   I
   I
   I
   I
   I
   I
   I
   I
   I

   *----THUMP


SOUTH
TOO LOW

DETONATION COORDINATES? 2,4,9

BLAM!!------------STATION DESTROYED!!!  THE WORLD
IS SAFE!

TRY AGAIN? (1=YES)? 2

READY
```

Fig. 2. Sample run.

tem as in Fig. 1. Now, make believe that it is a section of the ocean. You may make this section as large or as small as you like, but the coordinate origin (0,0,0 as y, x, Depth) will always be in the southeast corner (on the surface) of the ocean.

Somewhere within the boundaries of this section of ocean lies the evil Klingon (Why not? We blame them for just about everything else.) torpedo base. The base does not move, but it does pose a threat to world peace (sound familiar?) by torpedoing the passing "unfriendly" (to them) shipping. However, in typical Klingon style, it takes them awhile to "zero in" before they can fire. The amount of time it takes to zero in is directly proportional to the size of the section of ocean you have selected. In other words, the larger the area, the more time you have to get them before they get you.

You are the captain of a depth charge carrying destroyer. Your mission is to rid the seas of the evil Klingon torpedo base by destroying it with the ship's depth charges. This is accomplished by entering the detonation coordinates of a depth charge and using ship sonar reports to find the location of the base.

The request "detonation coordinates?" ("SPLASH . . . THUMP") is a request to enter the three numbers where you think the base is. Type a y (north/south) coordinate, an x (east/west) coordinate, and a depth (zero is the surface) coordinate, in that order, separated by commas.

You will then get a sonar report telling where your shot was in relation to the target. For example, if sonar reported the depth charge was "SOUTH," "EAST," and "TOO HIGH," the next shot would have to be more north (larger y coordinate), further west (smaller x coordinate), and deeper (larger depth coordinate). I use y, x, depth instead of x, y, depth because people are used to saying "southeast" – right?

Anyway, so the game goes until either the evil Klingon base is destroyed by a depth

```
10 PRINT"THIS IS THE DEPTH CHARGE GAME"
20 REM BY MARK HERRO FOR A COMPUCOLOR 8001
30 PRINT"YOU ARE THE CAPTAIN OF A DESTROYER LOOKING FOR"
40 PRINT"THE EVIL KLINGON UNDERWATER TORPEDO BASE."
50 PRINT
60 PRINT"YOUR JOB IS TO DESTROY THE BASE USING YOUR DEPTH"
70 PRINTCHARGES BEFORE THE KLINGONS ZERO IN AND TORPEDO"
80 PRINT"YOU AND TAKE OVER THE SEAS."
90 PRINT
100 PRINT"YOU MAY SPECIFY THE MAXIMUM SEARCH AREA BY GIVING"
110 PRINT"THREE NUMBERS--ONE FOR THE Y AXIS (NORTH/SOUTH),
115 PRINT"THE X AXIS (EAST/WEST), AND DEPTH.
120 PRINT"THE LARGER THE AREA THE MORE SHOTS YOU GET"
130 PRINT"BEFORE THE KLINGONS ZERO IN AND TORPEDO YOU"
140 PRINT
150 PRINT"TO MAKE A SHOT, ENTER THE THREE NUMBERS (Y, X, DEPTH)"
160 PRINT"WHERE YOU THINK THE BASE IS.  THE SHIP'S SONAR"
170 PRINT"WILL REPORT BACK WHERE THE SHOT WAS IN RELATION TO"
180 PRINT"THE BASE.  GOOD LUCK!!!"
185 PRINT
190 REM SET UP CONDITIONS
200 INPUT"MAXIMUM SEARCH AREA (Y, X, DEPTH)"; A,B,C
210 LET Y=INT(A*RND(1))
220 LET X=INT(B*RND(1))
230 LET Z=INT(C*RND(1))
235 REM SHOT LIMIT
240 LET S=INT((A+B+C)/5)
250 FOR L=1 TO S
260 REM START SHOOTING
270 IF L=S-1 THEN PRINT"BETTER HURRY...THEY'RE ZEROING IN FAST!"
280 PRINT
290 INPUT"DETONATION COORDINATES"; D,E,F
300 PRINT
310 PRINT"SPLASH!"
320 FOR H=1 TO 15
330 PRINT"    I"
340 NEXT H
350 PRINT"     *----THUMP"
355 REM "DEL" CAN BE SUBSTITUTED FOR THE "*" IN SOME SYSTEMS
360 PRINT
365 REM SONAR REPORT
370 IF D<>Y THEN GOTO 420
380 IF E<>X THEN GOTO 440
390 IF F<>Z THEN GOTO 460
400 PRINT"BLAM!!------------STATION DESTROYED!!!   THE WORLD"
405 PRINT"IS SAFE!"
410 GOTO 530
420 IF D<Y THEN PRINT"SOUTH"
430 IF D>Y THEN PRINT"NORTH"
440 IF E<X THEN PRINT"WEST"
450 IF E>X THEN PRINT"EAST"
460 IF F<Z THEN PRINT"TOO HIGH"
470 IF F>Z THEN PRINT"TOO LOW"
480 NEXT L
490 PRINT
495 PRINT"WHOOSH------------------------KERBOOM!!!!"
500 PRINT
510 PHINT"YOU'VE BEEN HIT!!!!  ABANDON SHIP!!!!!"
520 PRINT"ITS ALL OVER BUT THE SHOUTING"
525 PRINT
530 INPUT"TRY AGAIN? (1=YES)"; T
540 IF T=1 THEN GOTO 200
550 END
```

Fig. 3. Program listing.

charge ("BLAM"), or the Klingons finally "zero in" and torpedo you ("WHOOSH ... KERBOOM!"). Fig. 2 shows a sample run to illustrate how this can work.

The Program

Fig. 3 is the program listing. Except for the random number generation at 210 through 230, you should have little difficulty in adapting the program to your system. For the random generation statements, the idea is to generate a random integer between zero and your maximum area value. If you have some trouble getting it going, try this:

245 PRINT Y,X,Z

That will print your random values to troubleshoot other parts of the program (or cheat at the game, if that's what you want). Most of the program is pretty much self-explanatory. I'll be more than happy to answer any questions, as long as you enclose a self-addressed stamped envelope for my answer.

Good luck. Have fun. ■

R. W. Burhans
Department of Electrical Engineering
Ohio University
Athens OH 45701

If You Want To Know Where You Are

—loran-C receiver: part I

Loran-C is a pulsed low-frequency (LF) hyperbolic navigation system which is based on measurement of the time difference in the arrival of signals from station pairs in the user coverage area. The time differences are directly related to a distance measured from the observer to each of the stations, as shown in Fig. 1. The locus of all points with the same microsecond time difference is a hyperbola or a line of position (LOP). The intersection of two or more LOPs provides a fix and defines the position of the observer relative to the two station pairs used in the measurements, in this case M-X and M-Y.

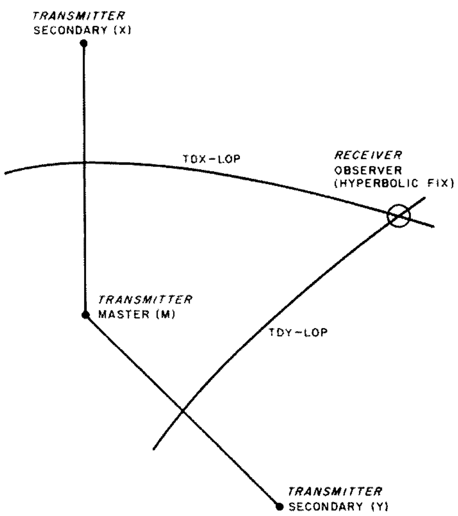

Fig 1. Hyperbolic fix geometry. TDX = the locus of all positions where the observed time difference between the times of arrival of the M and X signal is constant. (Illustration from CG-462 Loran-C Users Handbook, *August, 1974, U.S. Coast Guard, Washington DC.*

The precision depends on the receiver's ability to measure time intervals accurately and the observer's ability to correct for propagation errors. Charts and rate tables are published by the U.S. Department of Defense (DOD) Mapping Agency (see Table 1). Propagation of LF signals is quite stable for the ground wave out to 600 miles or so (1000 km). Reduced accuracy signals can also be received out to 1200 miles (2000 km).

The Mini-L receiver is a basic rf front end or converter for the loran-C pulse format. It can provide about 1-microsecond timing precision on the ground wave signal. This corresponds to about 500 feet at 500 miles or so. Commercial receivers using a 100-nanosecond (10 MHz) clock can provide greater precision, but they are usually much more complex than the Mini-L.

The idea here is to provide the experimenter with a 100 kHz rf front end which can actually be used for elementary navigation experiments and for time-frequency measurements at the 1-microsecond timing precision level. The Mini-L is not a navigation system, but rather is only an rf front end which generates interrupt requests or timing pulses locked to the loran-C signals. It is up to the user to generate his own software or hardware timing methods from the Mini-L output pulses. Some ideas and possible ways of using the Mini-L are presented in this article for those who are skilled in the receiver interface fabrication art.

Some commercial receiver systems may involve 50 ICs per LOP in digital hardware. Other very complex loran-C systems have, in the past, involved multiple processors where a separate microprocessor is used to keep track of each station pair, and still another uP is used for a synchronization or search-mode channel. This is beyond the capability of most amateurs, so some simpler alternatives are suggested. One of the things that most radio amateurs can do is use loran-C as a time-frequency standard reference source.

Radio amateurs may recall, and probably some mariners still use, the APN-4 or R-65, APN-9 loran-A receivers of World War II vintage, operating in the 160 meter band above the AM BC band. Loran-A has restricted radio amateur use of the 160 meter band since the late

1940s. The loran-C system is intended to eventually replace loran-A, although the phaseout will be quite slow. Loran-C is designed for improved precision, reducing the effects of sky waves, and provides greater coverage with fewer stations than loran-A. A problem in the past with loran-C has been the cost to achieve these goals for the average receiver user. The advent of microprocessors and modern IC circuit techniques provides means for possibly reducing this cost-complexity problem so that loran-C receivers might become available at much less cost. The Mini-L is a start in that direction.

Loran-C is a hot prospect at the moment for a general-purpose locating system in the CONUS (continental U.S.A.), as well as the coastal confluence regions of North America, the North Atlantic, Europe, the North Pacific, and elsewhere. There were some 22 chains operating or planned on a worldwide basis as of 1976, including two chains in the U.S.S.R. Fig. 2 illustrates the east and west coast U.S.A. chain coverage. High precision has been demonstrated in locating ground reference points for public service vehicles by the DOD, the state of New York, and others, where an rf front end in the vehicle telemeters the raw loran-C pulse rate data back to a central processor over an HF or VHF communications link.

Loran-C coverage for the U.S.A. will increase, with some new chains becoming operational in the period from July, 1978, to February, 1980. Table 2 is a list of the new chain configurations. These stations should provide at least one transmitter for all observers in the continental U.S.A. when loran-C is used as a time-frequency reference source.

Mariners and airborne users claim repeatability of 50 feet in locating reference buoys or touchdown points when using a 10 MHz (100 nanosecond) local clock reference in the receiver processor. The DOD has recommended loran-C and the military loran-D as standards for future airborne, marine, and ground-based locating systems. The U.S. Army Signal Corps has demonstrated remarkable precision in backpacking sets with 16K words of processor memory in locating the same ground reference point at almost any time of the day or night with loran-C-D. Airborne users are studying loran-C to augment wide-area navigation methods (R-NAV) where the GDOP (geometric dilution of precision) errors are usually less than for present VOR-DME methods.

The U.S. Naval Observatory keeps track of the timing precision of all the loran-C chains. They can be accurate to within 0.1 microseconds

Publication number	Loran-C rate tables	Price
221(1001)	East coast U.S.A. (Pair 9930-W)	$2.25
221(1002)	East coast U.S.A. (Pair 9930-Y)	2.25
221(1013)	East coast U.S.A. (Pair 9930-X)	2.25
221(1014)	Eastern U.S.A. (Pair 9930-Z)	2.25
221(2018)	West coast U.S.A. (Pair 9940-X)	2.25
221(2019)	West coast U.S.A. (Pair 9940-Y)	2.25
Chart number	**Loran tables and diagrams**	**Price**
5130	Loran-C coverage diagram, scale 1:45,000,000	$3.00
5148	Loran interpolator diagram	1.50

Table 1. Loran-C charts and tables are available from: Defense Mapping Agency, Hydrographic Center Depot, 5801 Tabor Avenue, Philadelphia PA 19120, phone: (215)-697-4262; or Defense Mapping Agency, Hydrographic Center Depot, Clearfield UT 84016, phone: (801)-773-3254. Order east or west coast publications, as needed. In addition, write for catalog and prices of the 7800-7900 series loran-C plotting charts and GLC-C-series global loran-C charts.

per day, or about 1 x 10^{-12}. This is a super-accurate clock. The signals may be used to determine the offset of local clocks with a relatively simple calibration method. In a matter of a few minutes, it is possible to determine the offset of your 1 MHz crystal oscillator to within 1 x 10^{-7} with respect to loran-C, and, in a 24-hour period, you should be able to determine the offset a few orders of magnitude better, if you happen to have a proportional oven-controlled clock that is stable enough to be worth this precision measurement effort.

For navigation, a high-precision clock on board the receiver processor is not required. Generally, the local reference should be within 1 x 10^{-5}, or 10 cycles, at 1 MHz for 1-microsecond timing precision (about 500 feet) or within 1 x 10^{-6} for a 10 MHz clock with 100-nanosecond measurement precision. The repetition rate of the chains is always less the 100,000 microseconds, thus a receiver is always capable of updating itself every 0.1 seconds or less.

Radio amateurs and microcomputer buffs who are skilled in the receiver interface electronics art can easily provide themselves with a loran-C front end for less than $100 worth of parts. The front end provides signals to a BCD or binary word generator for each loran-C pulse under a combination of hardware and software control, depending on the needs of the user. A loran-C processor and CPU with memory can provide the amateur with a mobile, marine, or airborne navigation set, as well as be used as a bench monitor for a house time-frequency standard reference. A simplified processor might require 4K or less memory. Commercial receivers presently sell in the $2k to $20k class, with a $5k model

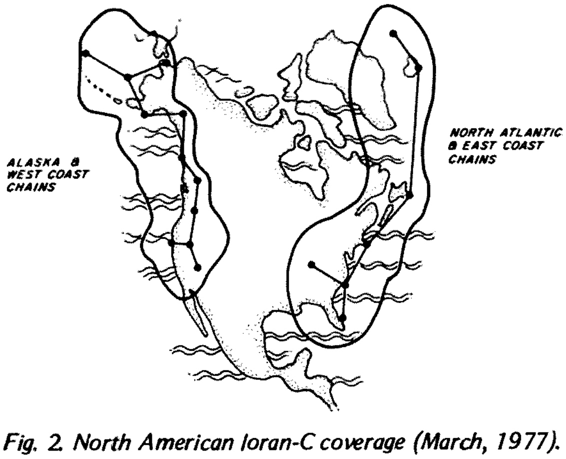

Fig. 2. North American loran-C coverage (March, 1977).

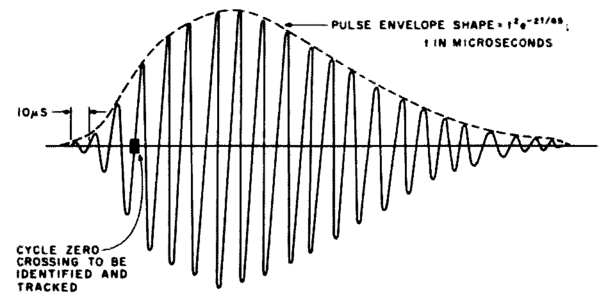

Fig. 3. Loran-C pulse.

using a microprocessor and readout systems for determining two lines of position in a microsecond time-difference mode, which can be directly read from charts or tables published by the DOD and the U.S. Coast Guard (USCG). Loran-C users should obtain a copy of the USCG CG-462 *Loran-C Users Handbook* (1974 edition or later) from a local USCG district office. Another very useful source of information is the Wild Goose Association (WGA), c/o Lloyd D. Higginbotham, 4 Townsend Rd., Acton MA 01720. The WGA publishes a yearly *Radio Navigation Journal* devoted to loran. The 1976 issue is full of information on basic receiver operational problems. Membership in the WGA is $10/year. As a member, you receive periodic newsletters and copies of their annual reports. WGA also sponsors an annual convention for loran buffs and anybody else who is interested.

Principles of Operation

The basic principle of operation of loran-C involves slave stations, which transmit groups of 8 pulses separated by exactly 1 ms intervals, and a master station, with a 9-pulse group inserting an additional 1 ms gap before the ninth pulse for easy identification. High radiated power in the 200 kW to 1 megawatt range is transmitted from each station such that most users will have a positive S/N in their receiver for a 20 kHz bandwidth on the ground wave at ranges up to 1000 km (600 miles). Usable signals for most receivers are also obtained out to about 1660 km (1000 miles), with somewhat reduced accuracy due to sky wave contamination of the ground wave signal.

The shape of each transmitted pulse is very carefully controlled at the transmitter so that the user can identify the third zero crossing of the 50% envelope amplitude point when using a hard-limiting type of receiver input circuit. It does not matter if a receiver chooses the second or fourth zero crossing here, but what is important is that the receiver must measure the same relative zero crossing for all signals used in the actual time-difference measurement. By determining one of these early zero crossings before 65 microseconds, as in Fig. 3, it is possible to largely eliminate sky wave contamination of the pulse envelope, which starts to rise after the first 30 microseconds in most of the user coverage area. The stations transmit groups of pulses, as illustrated in Fig. 4, with a known coding time delay (TD) which enables a receiver to predict when to start looking for the time differences in comparing a particular slave with the master. The pulses are also phase-coded so that further sophistication is possible in identifying stations and eliminating interference. The phase code repeats every other GRI and can be averaged out in a simplified measuring system. The GRI is a constant 99300 microseconds for the present east coast U.S.A. chain and 99400 microseconds for the west coast U.S.A. Thus a timer routine in the receiver sensor processor can be set to one of these known rates for navigation in a particular coverage area. The GRI and slave TDs become the initial conditions to tell the receiver what time differences to measure.

Loran-D is a military system which uses a compatible 16-pulse-per-station format, also at 100 kHz and

Station	TD	Power	Remarks
Seneca NY MASTER	--	1 mW	Northeast U.S. chain: ***GRI 99600***, July, 1978
Caribou ME SLAVE W	11000	.35 mW	
Nantucket MA SLAVE X	25000	.3 mW	Double rate shared with east coast chain
Carolina Beach NC SLAVE Y	39000	.7 mW	Double rate shared with east coast chain
Dana IN SLAVE Z	?	.4 mW	(present east coast chain — operational February, 1980)
Dana IN MASTER	--	.4 mW	Great Lakes chain: ***GRI 99300***, February, 1980
Malone FL SLAVE W	11000	1 mW	Double rate shared with southeast chain
Seneca NY SLAVE X	28000	1 mW	Double rate shared with northeast chain
Int. Falls MN SLAVE Y	44000	?	
Malone FL MASTER	--	1 mW	Southeast U.S. chain: ***GRI 79800***, August, 1978
Grangeville LA SLAVE W	11000	1 mW	
Raymondville TX SLAVE X	23000	.4 mW	
Jupiter FL SLAVE Y	41000	.3 mW	Double rate shared with east coast chain
Carolina Beach NC SLAVE Z	59000	.7 mW	(present east coast — operational July, 1979)
Carolina Beach NC MASTER	--	.7 mW	***GRI 99300*** until July, 1979 U.S. east coast chain — discontinued July, 1979
Jupiter FL SLAVE W	11000	.3 mW	Double rate shared with southeast chain
Cape Race NFLD SLAVE X	28000	1.8 mW	Double rate shared with North Atlantic chain
Nantucket MA SLAVE Y	49000	.3 mW	Double rate shared with northeast chain
Dana IN SLAVE Z	65000	.4 mW	
Fallon NV MASTER	--	.4 mW	U.S. west coast chain: ***GRI 99400*** (operational)
George WA SLAVE W	11000	1.2 mW	Double rate shared with west Canada chain
Middletown CA SLAVE X	27000	.4 mW	
Searchlight NV SLAVE Y	40000	.5 mW	

Table 2. Planned Loran-C coverage for the U.S.A. Note: reconfigured station coverage starting in July, 1978.

usually at less power. These will often be observed in loran-C receivers, but the sensor processor can be arranged to ignore this type of cross-chain interference which is not at the same GRI as the desired loran-C signal. The spacing between pulses of the loran-D signals is 0.5 ms, or half of the normal 1 ms spacing for loran-C. Mini loran-C chains are also sometimes used for local area navigation, and private chains for operation in certain offshore areas are possible by special arrangements with the USCG. These usually operate with a low power level of only 100 Watts per station, have a very limited coverage, and generally do not interfere with the operation of the major chains. GRI rates can be chosen so that a receiver, when used in a particular area, does not have much of a problem locking up on the desired repetition rate. When an observer first starts to look at raw loran-C signals on a simple oscilloscope display, dozens of signals may be observed, particularly at night, when sky waves predominate for the more distant signals.

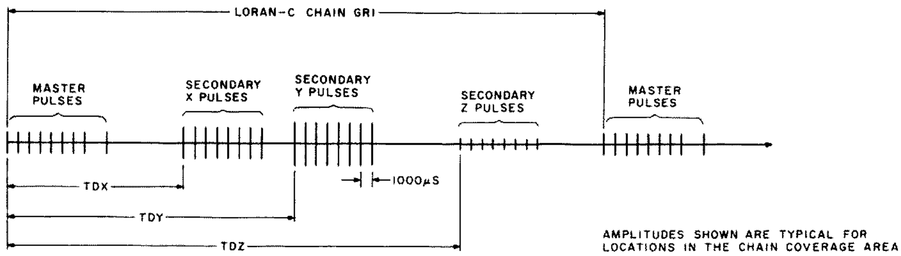

Fig. 4. Example of received loran-C signal.

The most controversial aspect of loran-C receiver operation is the proper identification of the third cycle. Sky wave contamination of the received pulse envelope can often result in confused identification of the proper starting point for determining the desired time differences. Receivers sometimes use what is known in the trade as a derivative adder or a delay-and-adder circuit. This provides an envelope cycle deriver (ECD). One form of the circuit consists of combining the envelope signal with a delayed version from the same envelope detector in an adder, which generates a peak amplitude at the desired third cycle. This depends on having an envelope detector and front-end bandwidth of approximately 20 kHz, so that the rise time of the recovered envelope is preserved at the input to the derivative adder.

The second part of this article will present the complete circuit details of the Mini-L loran-C receiver front end. This will include an antenna preamplifier, the basic rf envelope processor board, a suggested GRI rate generator for frequency standard calibration, and some KIM software for time-interval experiments.

Fig. 5 shows a family of experimental loran-C receivers.

The bibliography lists additional reference material for those readers who wish to dig deeper into the loran-C art. ■

Bibliography

Loran-C Users Handbook, CG-462, U.S. Coast Guard, Washington DC, August, 1974.

Loran-C System Characterization, WGA publication no. 1/1976, Wild Goose Association, 4 Townsend Rd., Acton MA 01720.

Radio Navigation Journal, 1976, Wild Goose Association, 4 Townsend Rd., Acton MA 01720.

"Loran-C Expansion in the Coastal Confluence Zone," W. B. Ferm, *Navigation*, JION, vol. 23, no. 3, pp. 187-190, Fall, 1976.

"Loran-C Navigation Charts for the Coastal Confluence Zone," W. B. Ferm, *Navigation*, JION, vol. 23, no. 3, pp. 191-194, Fall, 1976.

"Precise Time and Frequency Dissemination via the Loran-C System," D. Potts and B. Weider, *Proc. IEEE*, vol. 60, no. 5, pp. 530-539, May, 1972.

"Loran-C Timing Receivers," G. Kramer, *Frequency Technology*, vol. 8, no. 8-9, pp. 13-17, August-September, 1970.

"Microminiature Loran-C Receiver/Indicator," R. A. Reilly, *IEEE Trans. Aero and Electronic Sys.*, vol. AES-2, no. 1, pp. 74-88, January, 1966.

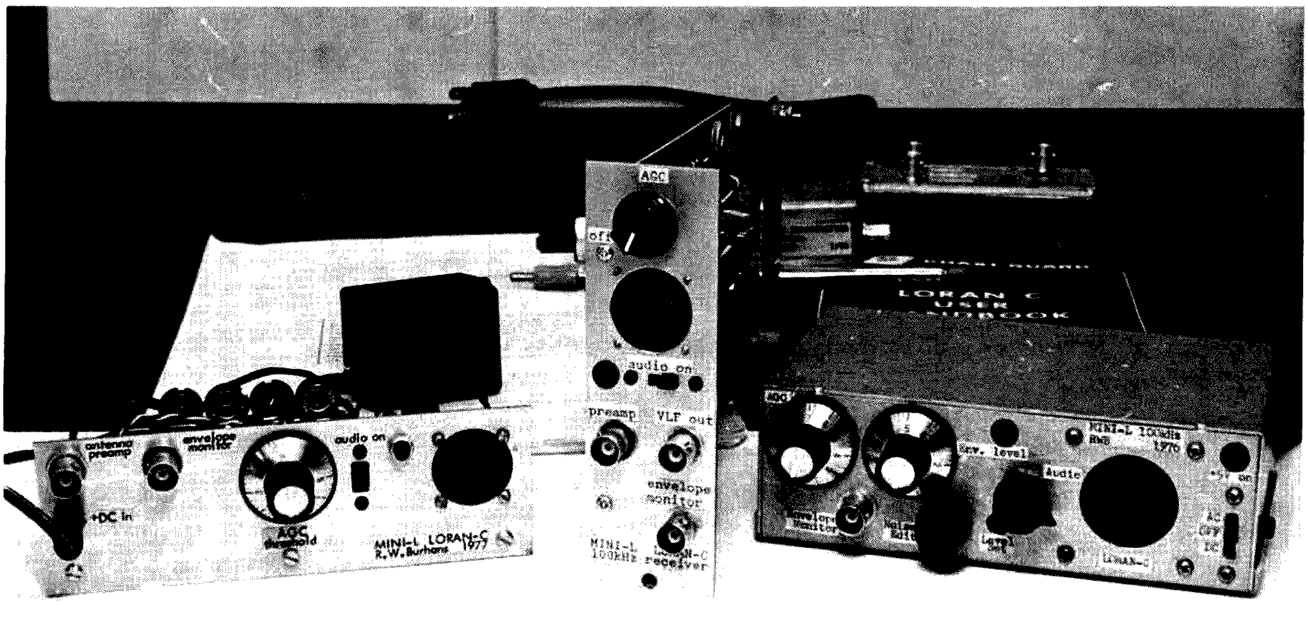

Fig. 5. Some experimental Mini-L loran-C receivers.

Errol D. Reid
University of the West Indies
St. Augustine
Trinidad, West Indies

The Experimenter's Dream Calculator

—$5 scientific surplus special

A short time ago, I got myself an S. D. Sales surplus scientific calculator for $4.95. The calculator comes completely assembled, less case and key tops. It consists of two boards – one is the keyboard and display section, the other carries the calculator chips (MPS2525 and MPS2526 from MOS Technology) – the high-voltage generator, display blanking, and low-voltage detection circuits. The two sections are connected mechanically by pressing 27 vertical terminals soldered to the keyboard section into 27 plated-through holes on the calculator chips section. Since the terminals are not soldered into the plated-through holes, the sections are easily separated. This is a definite plus if you plan to use the calculator in a microprocessor-based system. You simply arrange identical terminals on your interface board so that the calculator chips section can be easily transferred between the keyboard section and the interface board.

The keyboard comes with only the unidentified pads, no key tops. If you are as determined as I was, it may take you about two hours to work out the function of each key position. Since I did not have access to data on the calculator chips, it was mainly a case of press and see what you get. I would not recommend the same to my best enemy, so I have prepared Fig. 1 for you. There is no shift key, so each key has one function only (except possibly the M‡ and D/R keys). I expect that those persons who would take time out to buy a scientific calculator are aware of the use of the various functions in Fig. 1. However, let's examine a few which will enhance the use of the calculator. $\sin^{-1}$, $\cos^{-1}$, $\tan^{-1}$ (Cosec, Sec, Cot) can be found by evaluating Sin, Cos, Tan, then using the 1/x key.

The D/R key determines whether the trigonometric argument being used is interpreted in degrees or radians. When the calculator is first powered up, it comes up in the normal degree mode, and the D/R indicator is extinguished. Pressing the D/R key puts the calculator in the radian mode with the D/R indicator lit. Pressing the key a second time returns the calculator to the degree mode.

The M‡ key has two functions. It stores intermediate results, and it recalls the stored quantity to the display register. It will only function in the store mode after the = key is pressed. Recall of stored data occurs by subsequent pressing of this key. Neither of the clear keys will clear this memory register. Clearing is achieved by storing a 0, using the key sequence C, 0, =, M‡.

One very desirable function which is missing is X^2. But don't start crying yet; I'll show you a way to beat this disadvantage. Luckily, the X^2 function is available, although it's not used in the original keyboard design. Since you are going to add another function to the calculator, you will need to find another key. Again luckily, there are four redundant keys present. These are indicated in Fig. 1 as the extra C, CE, M‡, and = keys. The two keys of each similar pair are connected in parallel, so all you need to do is disconnect the required key and connect it wherever you wish. Of the four keys available, I used the inner M‡ key.

Here is how you go about the modification. Carefully lift the adhesive-backed plastic cover retaining the discs over the key positions. Lift it only so far as to give you working access to the chosen key position. Remove all the key discs in the immediate area of the M‡ key (inner). Using a high-speed burr, remove the copper area

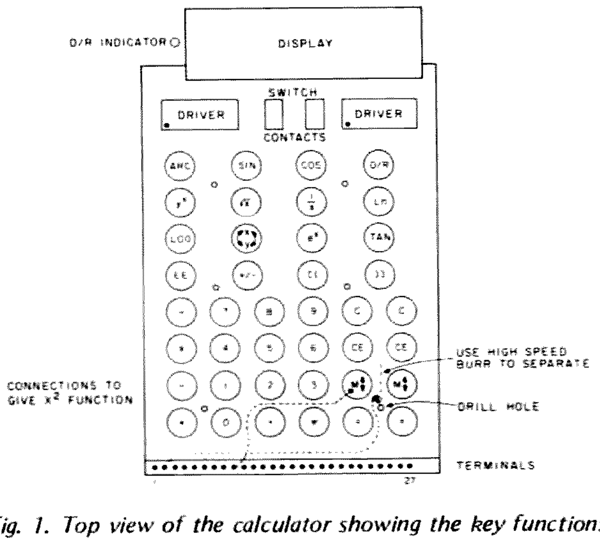

Fig. 1. Top view of the calculator showing the key functions.

connecting the two M‡ pads on the top of the keyboard. Drill a small hole in the position marked in Fig. 1. Remove the adhesive-backed plastic sheet protecting the printed wiring on the underside of the keyboard. Using a strip of #32 insulated wire, connect the outer copper pad of the inner M‡ key, using the hole drilled to access this pad from the underside of the board, to the underside base of the Y^1 terminal pin (see Fig. 2). This takes care of one side of the key. Again using the high-speed burr, separate the center conductor of the inner M‡ key from the rest of the circuitry to which it is connected, at about 3 mm from the center of the key position. Using a similar piece of wire as before, connect the center terminal of the inner M‡ key to the underside base of the D5 terminal pin (see Fig. 2). Your modification is now complete. Replace the adhesive-backed sheet on the underside of the keyboard.

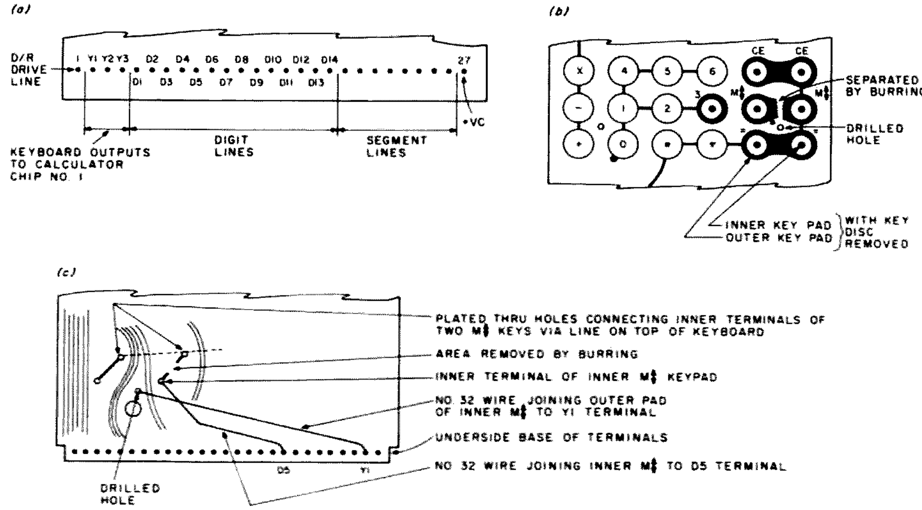

Fig. 2. (a) Expanded view of the terminal strip showing digit and segment output lines. (b) A section of the top of the keyboard showing where the key discs have been removed, where the hole is drilled, and where the outer pads of the M‡ keys have been separated by burring. (c) Bottom view of the keyboard showing the modifications.

Carefully remove all metal particles from the areas you burred on the top of the keyboard. Replace the discs carefully and press down the disc-retaining plastic sheet over the area from which it was removed. Relabel the inner M‡ key X^2. Try a few calculations to ensure all is okay.

The only fault (if it can be called such) that I could find in this unit is that, when the Y^x key is used to evaluate exponents, the answer is not always an integer when it should be. Thus, evaluating 4^2 gives 15.9999999 instead of 16; similarly 4^5 = 1023.99999 and not 1024. However, this does not even begin to be a serious limitation. ■

Roy Cawthon
2580 Norcross-Tucker Rd.
Apt. 95
Norcross GA 30071

Toward A More Perfect Weather Picture

—*pattern generator*

About a year and a half ago, I updated my APT station to use the new GOES WEFAX broadcasts on 1.691 GHz. 1 built a display capable of reproducing the high-quality data that is relayed over the WEFAX transponder. This article describes a test-pattern generator I designed to align or test satellite facsimile machines. The machine generates twelve shades of grey from black to white and is compatible with the 240-line/minute format. A good machine will faithfully reproduce twelve or more shades of grey. The photograph, Fig. 4, was made by my machine. In the original photograph, all twelve shades can be distinguished.

The electronics of the test-pattern generator are broken up into Figs. 1, 2, and 3. Fig. 1 shows the 2.4 MHz clock and dividers along with the 3 kHz low pass filter. Fig. 2 contains more frequency dividers plus the staircase generator. In Fig. 3, the power supplies for the generator are shown. Beginning with Fig. 1, the theory of operation is discussed below.

The purpose of the electronics in Fig. 1 is to generate the appropriate timing or clock pulses needed to run the staircase generator in Fig. 2. To begin with, a low-cost model OT-2 oscillator was purchased from International Crystal Mfg. Co. A 2.4 MHz crystal was purchased to use in the oscillator. Many amateur satellite ground stations already use this oscillator to generate horizontal sync in their APT pictures.

The output of this oscillator, OSC-1, is converted to TTL levels by CR1 and CR2. The 2.4 MHz square wave is buffered by U6A and B and

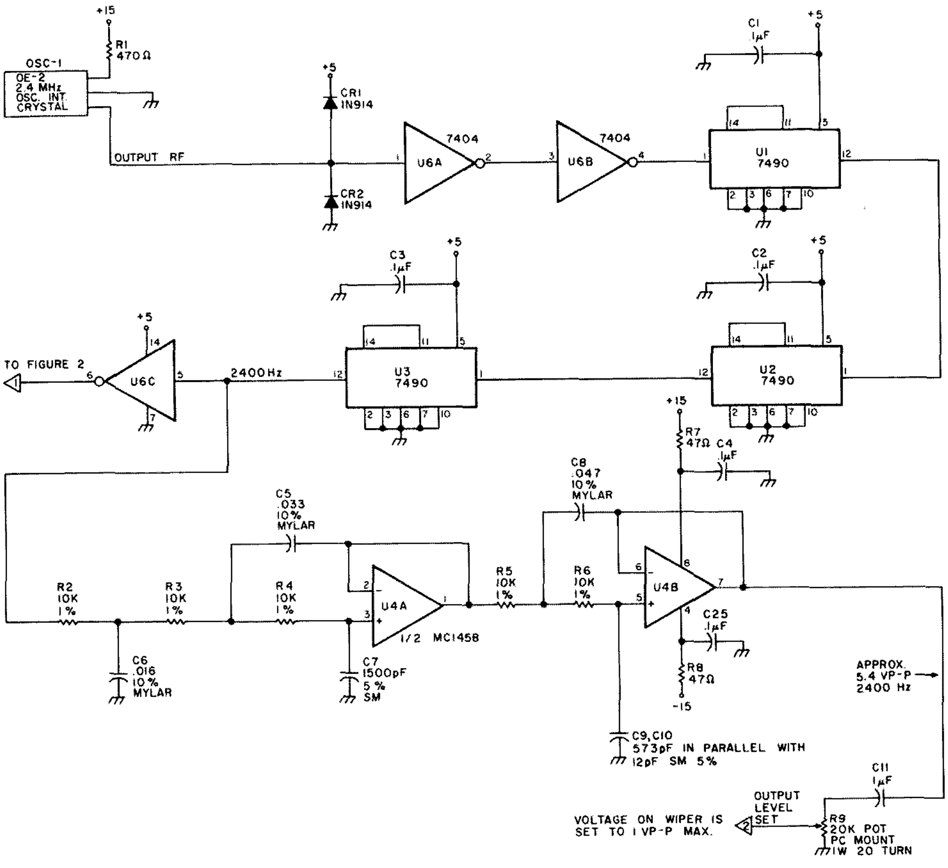

Fig. 1. Reference oscillator, 3 kHz low pass filter, and frequency dividers.

applied to the first frequency divider, U1. ICs U1, U2, and U3 are configured to divide by ten. The output at U3, pin 12, is a 2400 Hz square wave. This is the APT and WEFAX subcarrier frequency. The 2400 Hz square wave is routed two places. First of all, it is buffered by U6C and drives further dividers on Fig. 2. Also, the 2400 Hz square wave is filtered by a 3 kHz low pass filter, U4A and B, on Fig. 1. The low pass filter removes the higher order harmonics in the 2400 Hz square wave and yields a clean 2400 Hz sine wave at U4, pin 7. Capacitor C11 provides dc isolation, while pot R9 is used to set the 2400 Hz drive level to the staircase generator in Fig. 2.

The 2400 Hz square wave from U6C in Fig. 1 drives the remainder of the divider chain in Fig. 2. ICs U7 and U8 divide the 2400 Hz square wave down to 48 Hz. The 48 Hz TTL square wave is at U8, pin 8, and is used to drive U9, a four-bit binary counter. The four-bit binary counter has a special reset provided by U10A and B at count twelve. This gives a count of 0 to 11, or twelve states. The A, B, C, and D outputs on U9 count in binary from 0 to 11 in a 250 ms time frame. As these four outputs progress in their

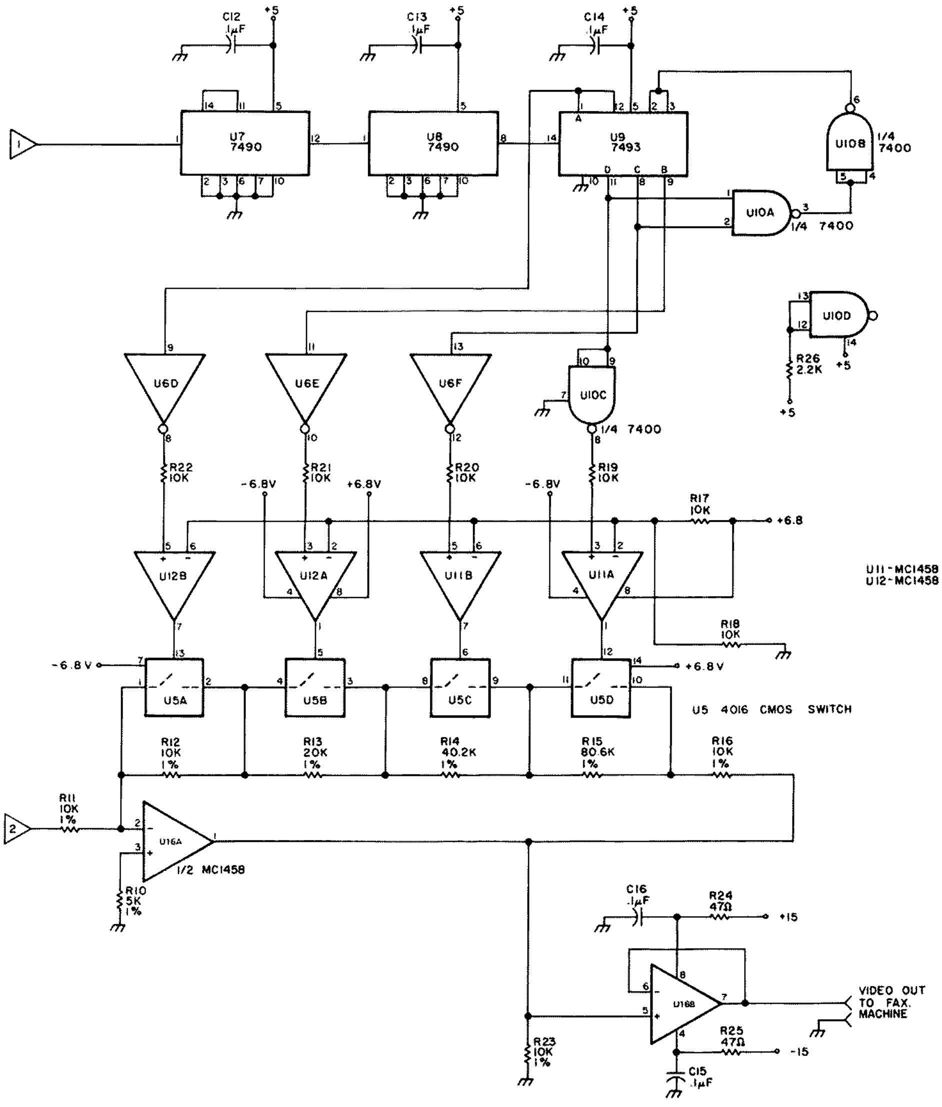

Fig. 2. Staircase generator.

Parts List

CR1, 2	1N914
CR3	VS-644 bridge
CR4, 5	1N4736 6.8 V zener
C1-4	.1 uF 50 V
C5	.033 uF mylar 10%
C6	.016 uF mylar 10%
C7	1500 pF silver mica 5%
C8	.047 mylar 10%
C9	573 pF silver mica 10%
C10	12 pF silver mica 10%
C11	1uF 50 V
C12-16	.1 uF 50 V
C17	1100 uF 50 V electrolytic
C18	.47 uF 50 V
C19, 20	100 uF 25 V electrolytic
C21	.47 uF 50 V
C22	1100 uF 50 V electrolytic
C23	.47 uF 25 V
C24	100 uF 15 V electrolytic
C25	.1 uF
R1	470 Ω ½ W 10%
R2-6	10k RN55 1%
R7, 8	47 Ω ¼ W 10%
R9	20k 1 W 20-turn PC pot
R10	5k RN55 1%

R11, 12	10k RN55 1%
R13	20k RN55 1%
R14	40.2k RN55 1%
R15	80.6k RN55 1%
R16	10k RN55 1%
R17-22	10k ¼ W 10%
R23	10k RN55 1%
R24, 25	47 Ω ¼ W 10%
R26	2.2k ¼ W 10%
R27, 28	820 Ω ½ W 10%
T1	Triad Model F-92A (38 V ac c-t winding is used)
U1-3	7490 decade counter
U4	MC1458
U5	4016 CMOS quad switch
U6	7404 hex inverter
U7, 8	7490 decade counter
U9	7493 4-bit binary counter
U10	7400 quad NAND gate
U11, 12	MC1458
U13	MC7915 -15 V dc regulator
U14	MC7815 +15 V dc regulator
U15	MC7805 +5 V dc regulator
U16	MC1458
S1	115 V ac 5 Amp DPDT toggle switch
OSC-1	OT-2 International Crystal Mfg. Co. oscillator
	One 2.4 MHz crystal required.

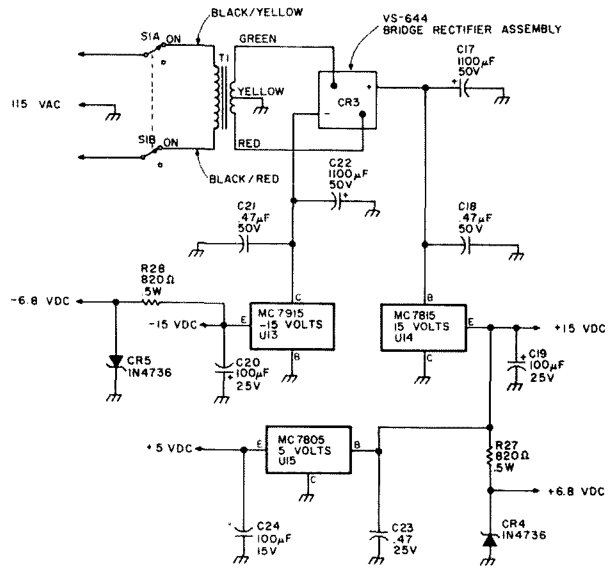

Fig. 3. Power supply. T1 is a Model F-92A (Triad). CR3 is a bridge rectifier. Four 150-volt piv 2-Amp diodes would be a good substitute.

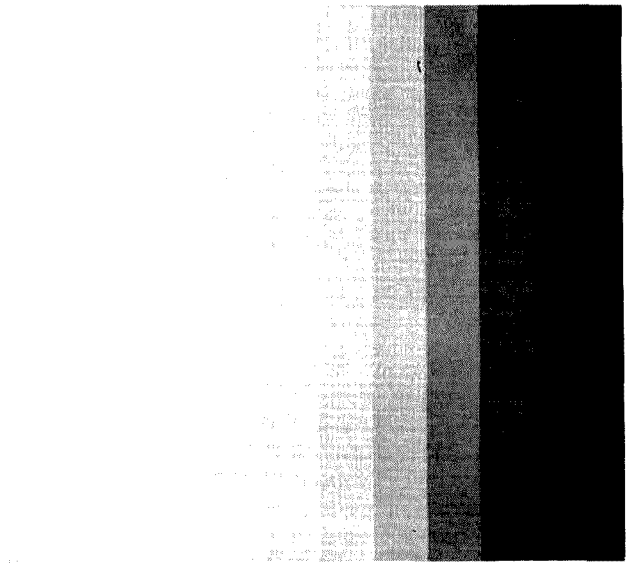

Fig. 4.

count sequence, they are used to adjust the gain of U16A in 12 steps.

Each binary word from the 7493 produces or selects a certain gain for U16A. To begin with, assume the 7493 is at count 0 and the A, B, C, and D outputs are all low. ICs U6D, E, and F, and U10C invert the low conditions to ones and drive the level shifters, U11 and U12. A logical TTL 1, going into either U11 or U12, yields +6.8 volts on the output. A logical TTL 0 gives a -6.8 volts at U11's or U12's output. Since U11 and 12 have all 1s going in, we get +6.8 V on all outputs, and each section of the 4016 CMOS switch, U5, closes. This leaves only R16 in the feedback loop of U16A.

R16 and R11 give U16A unity gain at count zero on the 7493 counter. As U9 progresses to count one, the A output switches from low to high. IC U6D inverts the one to zero, U12B switches from +6.8 on its output to -6.8 volts, and U5A opens. The gain of U16A is now (R12 + R16)/R11, or a gain of two. The resistor and switch network in the feedback loop of U16A will produce twelve changes of gain in 250 ms. At maximum count of U9, the gain of U16A is (R14 + R15 + R16)/R11, or 13. A gain of 13 from one, unity, yields twelve steps.

The input of U16A is the 2400 Hz sine wave from the wiper of R9. R9 is used to set the desired output level of the generator at U16B, pin 7. R9 will allow adjustment of the signal at U16B, pin 7, from 0 volts to about 12 volts p-p.* This p-p level is referenced to count 12, or the last voltage step in the staircase. The output waveform at U16B, pin 7, is a 2400 Hz sine wave with two very distinct sidebands of twelve equal steps. For those of you who would rather have more than 12 steps, the input frequency to U9 could be changed to 64 Hz. The reset circuit, U10A and B, could be removed and U9, pins 2 and 3, grounded. The 7493 has its normal 16 states, and U16A would go through 16 gain changes.

Finally, Fig. 3 contains the power supplies needed. The circuits are very easy to understand, and I feel that the schematics are more or less self-explanatory. Good luck with building your grey-scale generator. The circuits seem quite reliable and produce a nice test picture when fiddling with black and white lamp currents on a facsimile machine. At least now you can see if your machine is really adjusted properly by having the correct type of signal generator. ■

*The staircase generator should be given no more than 1 V p-p input from R9. Too much input will result in U16B going into saturation. The 1 V p-p value for the signal on R9's wiper should be an absolute maximum input. Most machines will only require a few volts p-p output from U16B in order to operate.

EDITORIAL BY WAYNE GREEN

from page 43

some intelligent management, we could have a nice hamfest at Vegas . . . Saroc isn't it.

ASPEN

The Third Annual Ham Industry Conference and Workshop met in Aspen for a week of work with occasional invigorating jaunts to the nearby slopes to get the cobwebs out. The consensus of opinion was that this was an absolutely invaluable series of workshops . . . on advertising, promotion, sales, marketing, financing, etc. The 1979 Fourth Annual Ham Industry Conference and Workshop is scheduled for Aspen, snow permitting, January 7-13. Most of the workshopees were clustered in the Continental, but others were spread out into nearby hotels such as the Aspen Inn, etc.

There has been no other opportunity for manufacturers, dealers, and the media to get together for relaxed and extended talks. This Conference provides a welcome opportunity for a badly needed exchange of ideas.

MORE PEOPLE NEEDED

As the list of *73* staff grows ever longer, one wonders where it is going to stop. There is no sign of even slowing down as yet. The fact is that we have quite a few interesting job openings for hams who are looking for a career in publishing.

We need more help as the magazine gets larger—help with testing and writing up new ham gear, help with setting up microcomputer systems and testing them out, help in checking out computer programs for microcomputers, help in advertising sales, in subscriptions, renewals, in marketing, editing, drafting, data processing,

Continued on page 135

William E. Browning WB5IRY
6712 E. Independence St.
Tulsa OK 74115

Is TTL Already Obsolete?

—*CMOS vs. TTL*

Is it time for a change? For several years now, the TTL logic family has been the standard for the digital hobbyist and home experimenter. It has given us the $50 frequency counter, the 50 wpm CW keyboard, and the frequency scanner for our 2 meter receivers. It has affected every amateur who has tried to keep up with the state of the art.

But, for the past couple of years, a new logic family has started to move into the picture. It is beginning to look like we had better get to know it now, as it just may put TTL in the back seat before much longer. What is this new logic family? Well, for those who haven't already guessed, I am referring to complementary metal oxide semiconductors, commonly known as CMOS.

Why would we want to use CMOS instead of TTL? To answer that question, I'll make some comparisons between the two families.

First: Average power dissipation for most TTL will run about 10 mW per gate. With low power TTL available, that will be down to about 1 mW per gate under static conditions. That's not bad, until we look at CMOS, which has an average power dissipation of .00001 mW (10 nW) under the same test conditions.

Second: Power supply voltage for TTL operating voltage is a minimum of +4.5 volts to a maximum of +5.5 volts, with an absolute maximum of +7 volts. This compares to CMOS operating voltage of minimum +3 volts to maximum 15 volts, with an absolute maximum of 16 volts.

Third: Noise immunity for TTL is typical at 1 volt. For CMOS, it is typical at 45% of the full logic swing.

There are other comparisons which could be made between the two families. In most, CMOS will win out; in some, TTL still has some advantage.

For those not familiar with CMOS, we can take a look and see how this family works and how it behaves in a system.

Let's start with the CMOS inverter gate which is shown in Fig. 1. It is made up of two MOS enhancement mode transistors, the upper a P-channel type and the bottom an N-channel type. The two transistors are connected in series across the power supply. Note that the gates of the transistors are connected together so that the input signal is applied to both.

If the input is high (V_{dd}), the P-channel is turned off (acts as a high impedance or open circuit) and the N-channel is turned on (acts as a low impedance or short circuit). An equivalent circuit of the inverter with the input high is shown in Fig. 2. You will notice that, in this condition, the output is effectively connected to ground (low output) and there is no path for current through the transistors (no current, no power dissipated).

If the input is low (ground), the P-channel is turned on and the N-channel is turned off. An equivalent circuit of the inverter with the input low is shown in Fig.

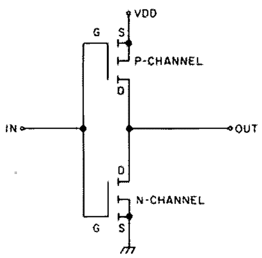

Fig. 1.

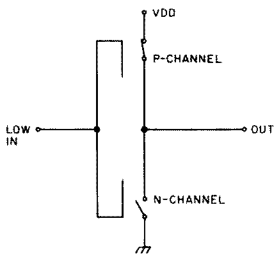

Fig. 2.

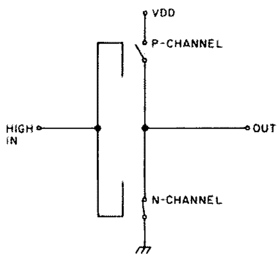

Fig. 3.

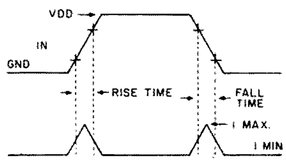

Fig. 4.

3. In this condition, the output is effectively connected to V_{dd} (high output), and there is no path for current through the transistors (no current, no power dissipated).

In the inverter, as with any CMOS device, there is a path for current from power supply to ground during switching. The longer the rise time and the fall time of the input pulse, the more power is dissipated, as shown in Fig. 4.

Another circuit that you will find in CMOS is the "bilateral switch." When the switch is turned on, the input is connected to the output and operates essentially like a closed switch. When the switch is turned off, the input is disconnected from the output and, like an open switch, offers a high impedance to input and output. Also, as in a switch, the input and output are interchangeable. Fig. 5 shows the bilateral switch. Note the inverter section which allows both switching transistors to be turned on or off at the same time by the same control voltage.

The use of the bilateral switch on CMOS integrated circuits allows us to have three output conditions – high (V_{dd}), low (ground), and high impedance (open circuit). If you have done any work on a system using common bus lines, you will see the importance of this circuit.

Now take a look at how CMOS behaves in an operating system. First, the CMOS input is a very high impedance, about 10^{12} Ohms, if you need a value to work with. This causes any floating inputs to drift back and forth between a high and a low, which can create some intriguing system problems. So one important rule to observe when using CMOS is that no unused input should be left open. They should be tied to V_{dd}, ground, or another used input, whichever is appropriate for your system.

For example, if you had a NOR gate and wished to use it as an inverter, you could tie the unused input to ground. Then the other input would control the output. If you had tied the unused input to V_{dd}, one input would always be low, and the output could not change conditions but would always be low. The third possibility of tying the two inputs together would also work. Fig. 6 shows the truth table of the NOR gate and the results after tying.

Fig. 7 shows a 4-input NAND gate tied to produce a 2-input NAND. You will notice that this time you need to tie the input to V_{dd} for proper operation. Tying to ground would not allow the output to change state. Once again, the third possibility of tying the two inputs together would also work.

A second CMOS system consideration is the power supply. Since CMOS can operate over a large range of power supply voltage, minimal filtering is necessary. The voltage does affect the operating speed of CMOS, so the minimum voltage is determined by the frequency of operation. The power dissipation is also a function of voltage. Power dissipation increases approximately as the square of the supply voltage. To minimize power consumption, the system should run at the minimum speed to do the job with the lowest possible power supply voltage. Because of the low current requirements of CMOS, especially at low frequency and low voltage, the family is well suited for battery operation.

As you start working with CMOS, you may find that you want to interface to other logic types. In any interface there are three considerations to take into account: Is the supply voltage compatible, can the CMOS output satisfy the current and voltage requirements of the other family's input, and can the other family's output meet the required voltage swing for the CMOS input?

Let's look at an interface of CMOS to PMOS: Most PMOS integrated circuits are specified with a power supply voltage of 17 to 24 volts. A possible way to interface is shown in Fig. 8. A zener diode is used to set the bias of the CMOS and, if the values are selected properly, it will allow the PMOS to drive the CMOS directly. CMOS can drive PMOS directly. Be sure that not more than 15 volts is across the CMOS. If you have PMOS which can operate on 15 volts

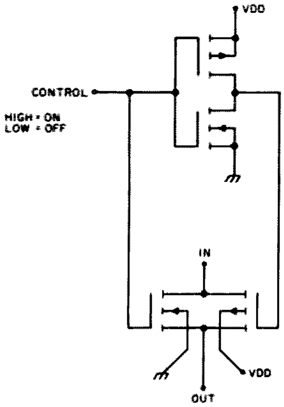

Fig. 5.

INPUT S		OUT
0	0	1
0	1	0
1	0	0
1	1	0

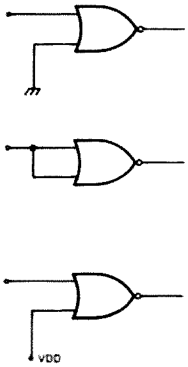

IN	OUT
0	1
1	0

IN	OUT
0	1
1	0

IN	OUT
0	0
1	0

Fig. 6.

1	2	3	4	OUT
0	0	0	0	1
0	0	0	1	1
0	0	1	0	1
0	0	1	1	1
0	1	0	0	1
0	1	0	1	1
0	1	1	0	1
0	1	1	1	1
1	0	0	0	1
1	0	0	1	1
1	0	1	0	1
1	0	1	1	1
1	1	0	0	1
1	1	0	1	1
1	1	1	0	1
1	1	1	1	0

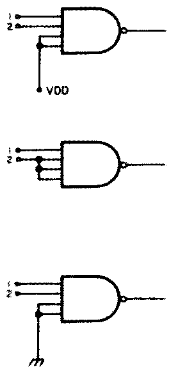

1	2	OUT
0	0	1
0	1	1
1	0	1
1	1	0

1	2	OUT
0	0	1
0	1	1
1	0	1
1	1	0

1	2	OUT
0	0	1
0	1	1
1	0	1
1	1	1

Fig. 7.

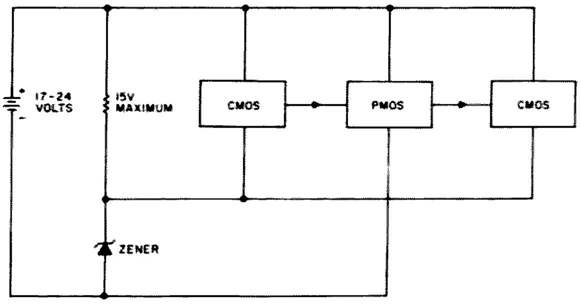

Fig. 8.

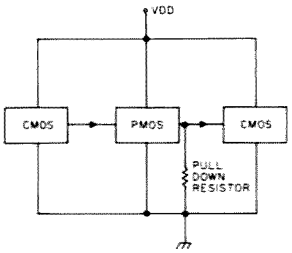

Fig. 9.

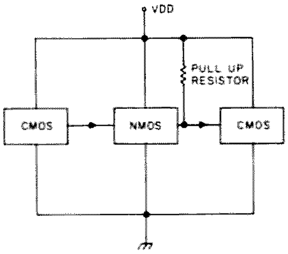

Fig. 10.

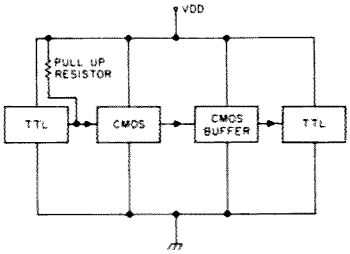

Fig. 11.

or less, the CMOS power supply can be used, but you will probably find that the PMOS output does not swing low enough to drive the CMOS input. This can be corrected with a pull-down resistor at the output of the PMOS. As before, CMOS can drive PMOS directly. Fig. 9 shows this interface.

Or you can interface CMOS to NMOS. Most NMOS power supply voltages are 5 to 12 volts, which is compatible with CMOS. CMOS will drive NMOS directly. However, NMOS may or may not drive CMOS, depending on the particular chip being used and on the supply voltage. A simple solution to this is the addition of a pull-up resistor on the output of the NMOS. Fig. 10 shows this interface.

If you want to interface CMOS to TTL, the normal power supply voltage for TTL is 5 volts, which will be compatible with CMOS. In most cases TTL will drive CMOS directly, but it is recommended that a pull-up resistor be used. Most CMOS will not drive standard TTL. There are, however, some CMOS chips that will drive up to two TTL loads, such as the CD4050A buffer. An interface for TTL and CMOS using the buffer is shown in Fig. 11. The MM74C02 2-input CMOS NOR gate by National can be used to drive a normal TTL load in lieu of a special buffer, if the designer is willing to sacrifice some noise immunity to do so.

The CMOS family provides all the basic gates, flip-flops, memories, and large scale integration logic required to perform all digital system functions. In addition, many CMOS integrated circuits may be adapted to both analog and linear applications. It does all this and, at the same time, operates over a wide supply voltage range while dissipating very low power. CMOS has a typical noise immunity of 45% of V_{dd} and a high fan-out of up to 50 or more. CMOS is becoming widely available, and at a cost only slightly above that of TTL.

At the start of this article, I asked if it was time for a change. What do you think? ■

References

1. *CMOS Integrated Circuits Data Book*, Motorola, Inc., 1973.
2. *CMOS Integrated Circuits*, National Semiconductor Corporation, 1975.
3. *COS/MOS Digital Integrated Circuits*, RCA, 1974.

Tom Cullen K1WXK
53 Sherman Ave.
Meriden CT 06450

Improve Your HW-2021

—more flexibility, etc.

I've wanted a handie-talkie for a long time, but I did some shopping around, finally decided that I couldn't afford one, and dropped the idea. Christmas was just about here, so I pooled all of my funds for the purpose of giving gifts. The YL asked what I wanted for Christmas and I very jokingly said, "How about a 2 meter walkie-talkie?" and let it lay. To my surprise on the fateful morn, there was a HW-2021 under the tree! After looking over the assembly manual and pasting in all of the changes that Heath had supplied, I went about putting it together. Six days and long nights later it was finished. On went the power switch; I checked for smoke – none. Oh, boy! Maybe it will work – it did.

I used it for about a week and it worked flawlessly; the 2021 is a real fine piece of equipment. All of a sudden, I couldn't bring up the local repeater with the mobile antenna or with the rubber duckie. A quick check with a wattmeter showed no rf output. The HW-2021 uses an RCA 2N5913 rf output transistor, which is supposed to resist burnout from a shorted or open antenna load. Don't believe it! Checking the external antenna jack, which is a mini 1/8" type, I found that the jack was open, so no antenna and one fried rf output transistor.

First on the list of things to do was locate a 2N5913. Called the local Heath store: none in stock, must be ordered; called local parts supplier: same answer – must be ordered. A visit to the local Radio Shack for some parts for one of my many projects turned up something very interesting. They have a transistor that is supposed to be good for a VHF driver and final and has one Watt for a power rating. The Radio Shack number is RS2038 and it costs $1.99. I bought one; for $1.99, it was worth a try. The case of the RS2038 is the same as the 2N5913, a TO-39, so no mods for the heat sink. I put it in and got indication of rf output. The driver and final stages of the HW-2021 must be retuned for best output; in mine, I found that I got the best out of it with the slug in the final coil completely removed. I think that this is due to the different characteristics between the two transistors. The original output gave me 1¼ Watts to a Heath wattmeter, and the RS2038 had an output of 1½ Watts. A check with the rubber duckie and the local repeater came right back on the air again.

The next thing to do was eliminate that 1/8" jack that caused so much grief. I always liked the BNC type of connector for rf jacks, so I decided to see if one would fit where the rubber duckie screwed in. I found that the single hole mount BNC connector (female) would fit into the hole nicely, but wasn't long enough to have the mounting nut tightened on the rear of the cabinet. A little bit of epoxy cement on the connector soon solved that problem. The flange that sits on the chassis when the connector is mounted perfectly covers the hole where the original screw-in type connector was and looks like original equipment. I soldered a small piece of braid from a piece of RG-174/U coax to the threads of the connector and passed it through the hole where the original connector was for grounding the shield of the rf output coax. Please remember to do this before you epoxy the connector to the case; I didn't and had one heck of a time trying to feed the braid through the hole. It is a tight fit, but can be done.

Now you are going to say, "What am I going to do with a rubber duckie that doesn't have a BNC fitting on it?" I said the same thing. If you are good with hand tools, you can make it fit on a BNC plug. One of the local hams here did it, but I purchased one with the BNC plug on it; I'm a chicken at heart.

The most use that my HW-2021 gets is in the mobile, and I wanted a way to run it off the car battery system instead of using the nicads. I didn't want to put another hole in the case, so I used the hole where the external antenna jack was! I got a good quality 1/8" jack made by Switchcraft and put it in the same hole. I didn't want the same thing to happen to the external power jack that happened to the antenna, so I used an open circuit type jack. Then it dawned on me: When the power from the car system was plugged in, the nicads would be across the full charge of the car and would overcharge them, causing their certain death. I put a 50 piv 1 Amp diode in series with the nicad power lead to allow voltage to pass from the nicads, but to prevent the car 12 volts from going across the batteries.

These mods have made a good handie-talkie a little more pleasant to operate. I hope that you have as much fun with yours as I have with mine. ■

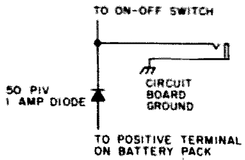

Fig. 1.

Karl T. Thurber, Jr. W8FX/4
233 Newcastle Lane
Montgomery AL 36117

Simple CW Interference "Filter"

—*diode code regeneration*

It goes without saying that most CW operators can send much better code if they have some means available to hear what they are sending out. If you use a separate transmitter and receiver, it is possible to turn down the rf or i-f gain controls while transmitting and listen to your own signal as it is actually radiated. Of course, there are a number of disadvantages to this method of CW monitoring, such as the need to constantly "ride gain," blasting in the phones when going from receive to transmit, and, worst of all, if the other station in QSO is not right on frequency, it is necessary to retune each time you stand by, with the resultant risk of losing contact when retuning. This last disadvantage is particularly disconcerting if the contact lost is WAS state number 50 or a rare VU2 or JT1.

Most of the fancier transmitters and transceivers available on the current market have built-in sidetone monitors, which work on a strictly audio-frequency basis and do not depend on the radiated rf signal at all. This is definitely the most reliable method of monitoring your keying (unless you insist on actually monitoring the radiated rf signal). Most lower-priced CW-only rigs and many of the popular home brew Novice designs do not include provisions for built-in sidetone monitoring.

A very simple and inexpensive method of monitoring your signal recognizes the fact that, most of the time, one of the first pieces of ham gear a prospective newcomer acquires is the code-practice oscillator, usually no more than a keyed audio oscillator driving a low-power audio amp into either phones or a small speaker. Unfortunately, this is also frequently the first piece of gear relegated to a dusty shelf, once the ticket is obtained. This article proposes a low-cost way to adapt practically any code-practice oscillator to monitor CW as transmitted, independent of either the receiver or transmitter gain or tuning.

The device shown in Fig. 1 connects to the transmitter or transceiver's coax output line at any convenient point, using a coax T-fitting. It is self-powered by rectification of a very small amount of the transmitter's output power (less than one Watt), driving a sensitive dc relay which follows keying automatically without any other direct connection to the key or elsewhere in the rig. Its output is connected to the key jack on the code oscillator, just as though it were a straight key itself. For code practice, the key can be connected to the jack provided in the unit so as to make its disconnection from the oscillator unnecessary.

Construction is very simple, and no special techniques are required. The monitor-adapter fits nicely into a 3-1/4" x 2-1/8" x 1-1/8" Bakelite box (Radio Shack #270-030, with aluminum cover), or, if radiation and TVI are factors, it can be built into an aluminum minibox, such as the Radio Shack #270-235 or equivalent, which is about the same size. A standard PL-259 coax plug is mounted to one end by drilling a hole just large enough for a UG-175/U or UG-176/U reducer to go through the hole, the end flange on the reducer holding the connector to the box (a dab of epoxy will keep it from slipping). A miniature phone jack and the 25k Ohm potentiometer are mounted to the aluminum front panel.

The heart of the monitor-adapter is the 6-volt sensitive miniature SPDT dc relay, available from Radio Shack as #275-004. (Although the relay is supplied as an SPDT type, one contact is left unconnected for our purposes.) If the relay is substituted for, be sure to obtain one which has similar characteristics, particularly one which will operate over a range of 6-9 V dc and requires no more than about 12 mA for operation. (Large, heavy relays are unsuitable, as this is definitely a QRP device — the germanium diode just won't rectify the quarter Amp or so that some relays need for operation.) Incidentally, although a 1N34 or 1N60 diode is specified, almost any large-signal diode that will handle at least 25-50 volts at around

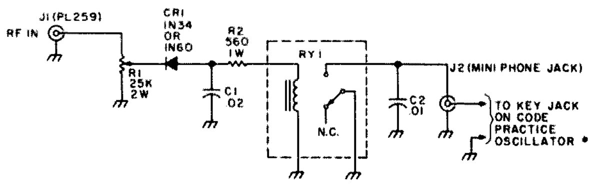

*Fig. 1. Complete circuit. *A basic minimodule code-practice oscillator, model CPO-4, is available from Poly Paks, Inc., Box 942, S. Lynnfield MA 01940, for $1.49, requiring a small PM speaker and 1.5 V battery for operation.*

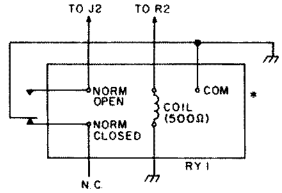

*Fig. 2. Blowup of relay connections. *Relay as it appears looking from the bottom (see diagram on back of "blister pack" package). Relay specifications (Radio Shack #275-004): voltage — 6 V dc (operating range — 6-9 V dc); resistance — 500 Ω; current — 12 mA; contact rating — 1 Amp at 125 V ac.*

12 mils or better should work well; I used an unnumbered surplus diode that was supposed to take over 100 volts at 100 mA. (Stock up, in case the diode you select won't handle the power. If you're running fairly high power, try paralleling a couple of diodes.)

About the only precaution to observe in construction is making sure that the relay is seated firmly. This is best done by epoxying its plastic case to the inside of the aluminum front panel. In tuning up, before connecting one side of the relay coil, check the voltage at the output side of R2. With full transmitter power applied, it shouldn't exceed 10 or 12 volts (start things off with R1 fully counterclockwise, advancing the control until the voltmeter reads 10-12 volts). The relay coil can then be connected to R2, and you're in business. Readjust R1 and recheck the voltage across the coil with full transmitter power applied. It should read 6-9 volts. Failure to observe these precautions could cost you a pot, diode, and relay!

The little unit is fairly frequency insensitive, but R1's setting may be tweaked if necessary when changing bands or output power levels. As designed, the unit should handle power levels up to 150 Watts or thereabouts.

If a linear amplifier is used, connect the monitor-adapter between the exciter and the linear, not between the amplifier and antenna or antenna coupler. (For higher power levels, try link coupling to the final output stage rather than using the resistance coupling I used. And don't substitute a higher rated wire-wound resistor for R1 — this may cause impedance matching problems for your rig.)

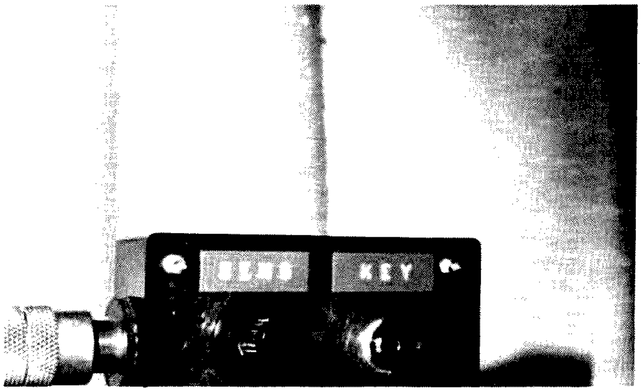

The unit can, as mentioned, be used as a code-practice oscillator without disconnecting it from the line by simply plugging a key into the phone jack on the front panel. Of course, it shouldn't be used for CW monitoring when practicing code!

I have used the unit with a Heath HD-16 code-practice oscillator with good results, following keying up to 25 wpm and more. It can be used with other code oscillators in which the key simply acts as a circuit closure. Total construction cost is about $7.50, even if all new components are used. ■

CONTESTS

from page 58

amateur interest the Bermuda Dept. of Tourism has. US stations may obtain a copy of the rules, logs, and check sheets from: Bernie Swandic K3DH, 7417 Mill Run Drive, Derwood MD 20855. Please include a large envelope with 13¢ postage.

ZERO DISTRICT QSO PARTY
Starts: 2000 GMT
Saturday, April 22
Ends: 0200 GMT
Monday, April 24

Organized by the Mississippi Valley Radio Club, this contest covers a lot of territory and should create a lot of activity. Stations outside of Zero district will work Zero district stations only, but Zeros may work both in and out of district stations. The same station may be worked once on each band and each mode.

EXCHANGE:

QSO number, RS(T), and QTH. QTH is county and ARRL section for Zeros, ARRL section only for all others.

SCORING:

For Zeros—total QSOs multiplied by (ARRL sections + Zero counties + DX countries) worked. Others—total QSOs multiplied by (Zero counties + Zero sections).

FREQUENCIES:

3560, 7060, 14060, 21060, 28060, 3900, 7270, 14300, 21370, 28570, 3725, 7125, 21125, 28125.

ENTRIES & AWARDS:

Beautiful four-color certificates will be presented to the General class section high scorer and to the Novice/Tech class section high scorer. Mailing deadline for entries is May 31, to: WB0UUA, Mississippi Valley RC, 3518 W. Columbia, Davenport, Iowa 52804. Include an SASE for results.

SHERLOCK HOLMES AWARD

The Sherlock Holmes Award (SHA) is sponsored by the German Section of the International Police Association. It is designed to enhance the spirit of friendship among radio amateurs according to the motto of the IPA Radio Club: Servo per Amikeco (meaning Service through Friendship).

Amateur and SWL stations can apply for the SHA. Award hunters must work IPA RC member stations. A member station can be worked once on each amateur band. Application forms and a list of IPA RC stations are available from either DL3SZ or WB4QJO. DX stations send one IRC; other stations send an SASE.

The award is issued only for contacts made after 1 March 1976. There are three (3) SHA classes: a. SHA 50 (basic award); b. SHA 100; c. SHA 200. Participants must hold the SHA 50 before being eligible for the SHA 100. Only holders of SHA 100 are eligible for SHA 200. The fee schedule is listed below. Stamp endorsements are available for SHA 300, 400, and 500.

Schedule of points: The basic award requires a minimum of fifty (50) points. Contacts count as follows: IPA RC members in hunter's country—2 points; IPA RC member in DXCC country, hunter's own continent—5 points; IPA RC member in DXCC country, all other continents—10 points. IPA RC *club* stations count double on each amateur band.

Send completed verified application with 8 IRCs (resp. U.S.$ or DM 5) to cover cost of handling and printing, to: Adolf Vogel DL3SZ, Ritter-von-Eyb-Strs. 2, D-8800 Ansbach, Germany.

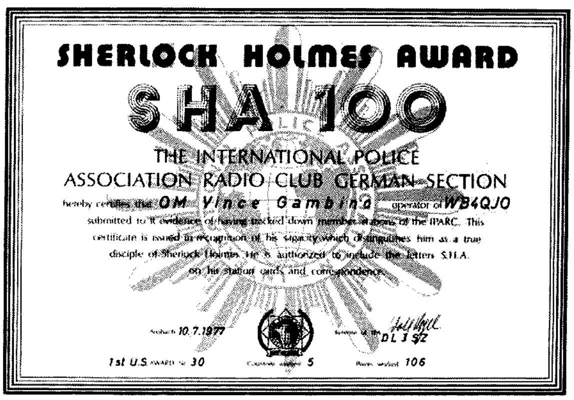

C. Warren Andreasen WA6JMM/N6WA
P.O. Box 8306
Van Nuys CA 91409

The Best Probe Yet?

—this audible probe is safer to use

The other day I had to debug some CMOS logic, and as I reached for my oscilloscope, it dawned on me that I had forgotten to bring it home. I reached for my trusty DVM (digital voltmeter) and started checking levels. To those of you who have never tried this method of logic debugging, don't. First you have to find the correct pin to put the probe on, and then when you look up to see what the meter says, the probe slips and you start all over again. I thought, "Gee, wouldn't it be nice if I didn't have to look to see what the meter said?" I thought about the normal logic probe with its indicator in the tip, and thought how nice that is; however, you still have to take your eyes off your work to look. This may sound like a small thing, but I find it irritating.

My next thought was, "Why not make a piece of test gear that gives the output in audio?" The unit does not have to fit totally in the hand since it's for bench work, and if I don't have to have the entire unit in my hand, creation of the sound (loudspeaker) won't be a problem.

To get to the point, I designed and built a logic probe that works with CMOS, produces a high tone for a logic high, a low tone for a logic low, and no sound for an open or floating string. In addition to this, the unit will detect narrow pulses and stretch them so the user is able to hear them.

The audio probe will detect high to low, or low to high pulses, and will do anything any good probe will do, except its output is in sound. It works great!

Circuit Description

Transistors Q1 and Q2 form the input stage. Under no signal or floating input condition, both transistors are biased on by the base resistors. In the ON state, the collector of Q1 is near ground and the collector of Q2 is near plus volts. I say near because of the 3 volt zeners in the emitter of each transistor. The zeners will subtract their voltage from what is developed in the collector circuit. The purpose of the zeners is to provide a threshold level at which the transistor will key. For Q1 to turn on, the base must be greater then 3.5 volts, and for Q2 to turn off, its base must be higher than supply voltage minus 3.5 volts. This choice of zener value is not critical. The choice I made is based on the fact that I run all of my CMOS circuits from 12 volts, and with this value of zener, my probe rejects any signal not below 3.5 or above 9 volts. A functioning circuit will easily exceed these values, and if it won't, the circuit is bad. From this point on, I can think logic. I will call the collector of Q1 "A", and the collector of Q2 "B". If the probe tip is floating, A is low and B is high. If the tip is low, A is high and B is also high. If the tip is high, A is low and B is also low.

Three unique states — one for each condition. Now all that is necessary is to decode the states. Only the 1 and 0 states are decoded, since if the state is not a 1 and 0, it must be the open state and nothing happens during this state. If a high condition occurs, the 1 decoder triggers the pulse stretcher. This pulse stretcher is a bit different in that it uses an OR gate. If pin 1 goes high, pin 3 also goes high, feeding back through C1 holding pin 2, and itself high for the time determined by the time constant of C1 and R5. When C1/R5 time out, the output of pin 3 will drop low again *if* there is not a high still on pin one. The gate acts like a straight piece of wire except that it will stretch a short pulse. Any time the output of pin 3 is high, it will enable the high pitch oscillator, causing a high tone to be generated.

The 0 decode, pulse stretcher, and oscillator work exactly the same as the circuit just described, except, of course, the tone generated is a low pitch. The two tones

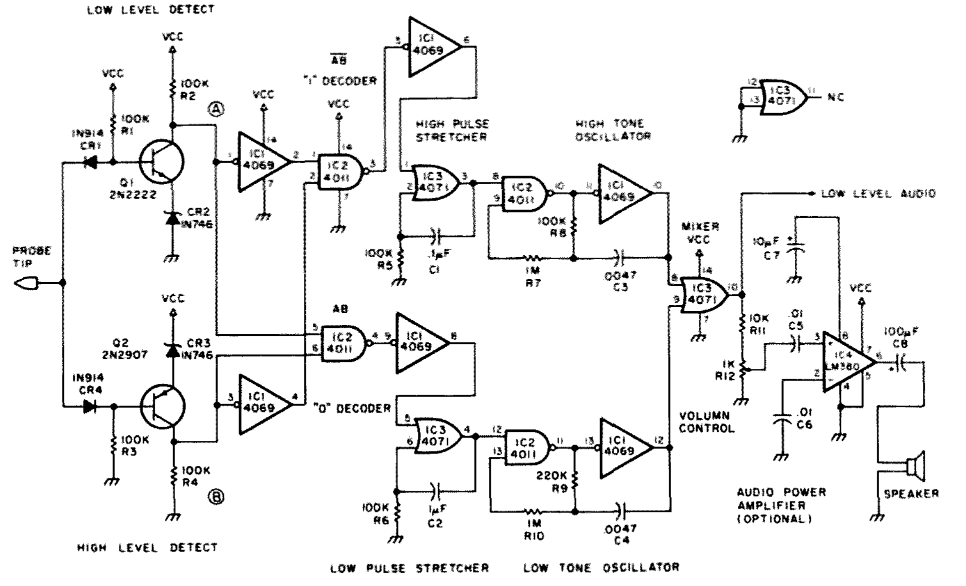

Fig. 1.

generated are mixed in the final section of IC3, with the inputs on pins 8 and 9, and the mixed audio on pin 10. The output at pin 10 is good for an earphone (used with a volume control) or a small speaker. Since I went this far and want to use this unit even if the environment is noisy, I went ahead and added a small audio amplifier which will blast me out of the room if necessary. As mentioned, the unit will produce a high tone for a high and a low tone for a low. With a bit of practice, as with other types of probes, you can get a pretty good idea of what is going on by the sound. If it sounds like both tones are on, you have a square wave signal; if you have a high tone with a low tone "ticking," you have a high with a low pulse, and so on. Now, if I should adjust the low tone to 2125 Hz and the high tone to 2975 Hz, and stick the probe into my Teletype™ machine, hummm . . . ■

Parts List

IC1	CD4069	Hex Inverter (RCA)
IC2	CD4011	Quad 2-input NAND (RCA)
IC3	CD4071	Quad 2-input OR (RCA)
IC4	LM380N	Audio Power Amplifier (National)
Q1	2N2222	NPN Transistor
Q2	2N2907	PNP Transistor
CR1,4	1N914	Signal Diode
CR2,3	1N746	3 Volt Zener Diode
R1-6,8	100k	1/4 Watt Resistor
R7,10	1 Meg	1/4 Watt Resistor
R9	220k	1/4 Watt Resistor
R11	10k	1/4 Watt Resistor
R12	1k	Variable Resistor (Pot)
C1,2	.1 uF	Capacitor
C3,4	.0047 uF	Capacitor
C5,6	.01 uF	Capacitor
C7	10 uF	Capacitor
C8	100 uF	Capacitor

EDITORIAL BY WAYNE GREEN

from page 118

secretarial, and managing.

This is a wonderful environment for people who don't smoke . . . who are anxious to build a good career . . . to learn . . . and who don't need much supervision. There is no room for people who are just looking for a job. Non-achievers drag everyone down. We expect people to be proud of what they accomplish and to constantly strive to improve themselves. We give you enough rope here to climb any mountain . . . or to hang yourself. The choice is entirely up to you and what kind of a person you really are. This is a workaholic's paradise.

During the next year we're anxious to increase the circulation of *73* . . . perhaps double it. This is going to take a lot of work. We also want to double the number of ads and are aiming at someday running a 500 page magazine every month . . . one that will take two months to read. More work. The circulation will come—*73* is the biggest and best of the ham magazines—it's mostly a question of getting the word around. 429 articles published in 1977 against 164 in *QST*. Ads in *73* almost always outpull ads in the other magazines by a wide margin; still some firms are doggedly throwing away hundreds of thousands of dollars in sales by not advertising in *73* . . . a move which increases the cost of ham equipment, obviously.

If you'd like to be part of the dedicated group which puts out *73*, send a resumé, references, and a letter telling me about yourself, your interests, and what you've accomplished so far in life. We're open for anyone . . . with no strong prejudices on color, religion, age, sex, etc. The only exception is smoking . . . if you smoke or are addicted to other drugs, don't write.

A DX COLUMN IN 73?

A few years ago, I got the idea of writing to all of the governments of the world and getting information on how visiting amateurs could get licensed. About three score quickly sent in the information, and suddenly I had a pile of papers about eight inches high to pore over and write up in brief form.

After a while, it became evident that it was going to take more than good intentions to get this pile into publishable form. Luckily at this time . . . or perhaps unluckily . . . a good friend volunteered to take on the responsibility. The days dragged by and nothing arrived . . . then weeks . . . months . . . and now it has been years. I suspect that I had better not depend on him further . . . I'm beginning to lose faith.

I'd like to see a monthly DX column in *73* which would tell us how to get licenses in other countries . . . which would bring us pictures and the stories of some of the more exciting DXpeditions . . . which might even help organize some DXpeditions. The person to write this should have a good deal of time . . . a respectable DX score (at least 300 countries confirmed . . . it took me about two years to get 300 confirmed) . . . the ability to write . . . and the determination to get a job done despite obstacles. It will take a lot of correspondence with foreign governments. It will also take a lot of listening and asking around on the DX bands, ferreting out the stories.

Anyone interested?

BIRMING-HAM-FEST MAY 13-14

It looks as if Birmingham is going to have one of the biggest hamfests they've ever had this year . . . well worth the trip, I'd say. There'll be something for everyone, with Dave Ingram K4TWJ hosting the SSTV forum, Steve Gilbert WD4EKN the 10m channelized band session (converted CB units), Hop Hayes K4TQR the repeater forum, plus forums on microprocessors, computer programming, MARS, solid state design, ARRL, emergency net systems, etc. There will be a 30-second forum where I will cover in depth the merits of the League and a one hour Q&A session afterwards, followed by the usual ritual tar and feathering.

In an effort to keep the hamfest banquet a small affair, word has been leaked that I am the banquet speaker . . . possibly Rick Cooper was unavailable. Will the chicken be better than the speaker?

Many of the top ham manufacturers will be exhibiting . . . Atlas, Data Signal, Dentron, Drake, Icom, Radio Shack, Palomar, Long's, Opto-electronics, ZZZ, and others. There will also be a goodly number of microcomputer exhibits. This will be a good time to come and see these pesky contraptions.

The prizes are not to be discounted either . . . like one of the new Dentron transceivers (DTR-1), a Drake TR-4CW and TR-33C, an Icom IC-215, a Wilson HT, a Regency HR-312 and HR-2B, etc. Micro fans have a chance at an SWT 6800 computer. No, forget that last one, for I fully intend to put as many tickets in for that as I can and walk away with it. Know you that I am known as Lucky Green when it comes to hamfest prizes, so despair. I've been wanting a Southwest Tech 6800 ever since they were announced . . . it's just that I've been too poor (or Scotch) to buy one.

MAUNDER MINIMUM CONFIRMED

A recent Sunday *Times* article (thanks to W2OLU for sending the clipping) on ice cores in the Antarctic mentioned that these cores reflect the level of sunspots with the nitrogen compounds in the snow. By bringing up cores of ice, scientists have been able to confirm that there were no sunspots between 1645 and 1715, the Maunder Minimum, as it has been called.

This confirms that our sun is a variable star and that the Earth went through a little ice age during the sunspot lapse.

So far the cores have been examined only back a few hundred years. On the strength of this confirmation of the Maunder Minimum, scientists will now start examining cores which are already in storage, brought in from Antarctica and Greenland, extending solar history back over 100,000 years. It will be interesting to see what correlation there is between the sunspot activity of the past and climate changes such as ice ages.

Without sunspots, DX must have been terrible in the 1600s.

STANDARD EXPANDS

Standard Radio, at one time one of the largest ham manufacturers, got off into CB for a while and now is coming back into hamming with a major effort. Marv Driscoff is moving from VHF Engineering to work with Standard, aiding Glenn

Continued on page 138

L. A. Erwin, Jr. WA4FDE
210 Earl Dr.
Lyman SC 29365

How Sunspots Work

—basics for the Novice

For the newcomer to radio communications, as well as for many oldtimers, the subject of sunspots can be very confusing. With the new cycle expected to begin increasing, there is increasing interest in the subject of how they will affect propagation. The purpose of this article is to give a brief understandable explanation of what sunspots are and how they affect radio wave propagation.

Though great advances have been made in recent years in understanding the many modes of propagation of radio waves, variables affecting communication over long distances are very complex.

The sun, ultimate source of life and energy on Earth, dominates all radio communication beyond the local range. Conditions vary with such obviously sun-related earthly cycles as time of day and season of the year. There are also short- and long-term solar cycles which influence propagation. The state of the sun at a given moment is critical to long-distance communications.

Solar Phenomena

Sunspots play a major role in radio wave propagation, so it is necessary to have a general understanding of the spots themselves. The *McGraw-Hill Encyclopedia of Science and Technology* presents the following description of sunspots:

> "A sunspot begins as a small dark area known as a pore, 2000-3000 kilometers in diameter. The pore develops into a full-fledged spot in a few days, and the maximum development is reached within the next week or two. Decay, which consists simply of shrinkage of the spot area along with its magnetic field, is much slower. The life span varies from a few days for small spots to about 100 days for large groups."[1]

Sunspots have two parts: umbra, the darker central area, and penumbra, the lighter surrounding area. They appear dark because of the brilliant surrounding area of the sun. Their temperature is 4500 degrees Kelvin, which is cooler than the rest of the sun. They appear in groups with a leader and a follower and are quite large in size. Some groups have been observed whose length equaled the distance from the Earth to the moon.[2]

At times, they appear singly, but the most common appearance is in groups which are dominated by two large spots in a bipolar center.

The magnetic fields of the sunspots are probably responsible for the cooler temperature and darker appearance. (They are about eighteen percent darker than the surrounding area of the sun.) The magnetic field is also responsible for the radiation associated with the spots.[3] The magnetic fields may also appear with opposite magnetic polarity. When this occurs, large flares are produced, and an extremely large amount of energy is released due to the interaction and annihilation of the fields.[4] This usually takes place during the week when a sunspot goes through maximum development. The flare has the appearance of a violent ejection of material from the surface of the sun.

Sunspots occur in cycles of approximately eleven years. They begin in high latitudes in the northern and southern hemispheres. They increase in size and number, reaching a maximum in about four years. The decay process is about twice as long, with the cycle ending in about eight years and located in low latitudes.[5]

Even before their correlation with radio propagation was well known, the periodic rise and fall of sunspot numbers had been studied for many years. Though these cycles average roughly eleven years in length, they have been as short as nine and as long as thirteen years.

Current observations are recorded by use of the Zurich Sunspot Number. A useful modern indication of overall solar activity is the solar flux index, which is sometimes called the "A" index. Solar flux readings are made several times a day by the National Bureau of Standards. A solar flux reading of sixty relates to a sunspot number close to zero.

The cycles do not go smoothly from low to high or high to low in intensity; they fluctuate during the cycle. In October, 1974, which was only a few months from the bottom of cycle twenty, there were a few days when the index reached 145, which is higher than the peak of some cycles. A few months later, the index had dropped to below seventy.

The high and low indexes for the cycles vary greatly. Cycle nineteen peaked in 1958 with a sunspot number of 200. In 1969, cycle twenty peaked with a number of 120, which was near average intensity. One of the lowest on record was cycle fourteen, which peaked at sixty in 1907. We are currently beginning cycle twenty-one.

Sunspot cycles should not be thought of as having sine-wave shape. There can be isolated highs during the normal low years. A remarkable example was a run of several days in October, 1974, only a few months from the approximate bottom of cycle twenty, when the solar flux reached 145, a level well above the highs of several cycles on record. Only five months later, several days of solar flux below seventy were recorded.[6]

Solar Radiation

Insofar as it affects most radio propagation, solar radiation is of two principal kinds: ultraviolet light and charged particles. The first travels at about 186,000 miles per second, as does all electromagnetic radiation. The effects on wave propagation take place almost immediately from ultraviolet radiation. The charged particles travel much more slowly and may take up to forty hours to have an effect on propagation.[7]

The sun produces a constant stream of radio waves. During periods of large sunspots, an excessive amount of emission occurs. This large amount of emission corresponds to the high electron concentration in the ionosphere. When sunspots become highly active, the flares which are produced cause a large quantity of charged particles to be emitted. These also have an effect on the ionosphere.

Variations in the level of solar radiation can be gradual, as with the passage of some sunspot groups and long-lived activity centers across the solar dish, or sudden, as with solar flares. An important clue for anticipating variations in solar radiation levels and radio propagation changes resulting from them is the rotational period of the sun, approximately twenty-seven days. Sudden events may be short lived, but active areas capable of influencing radio propagation may recur at four-week intervals for four or five solar rotations. Evidence of the twenty-seven day cycle is most marked during years of low solar activity.[8]

Ionosphere

The effects sunspots have on radio wave propagation become clearer if the characteristics of the ionosphere are understood.

Long-distance communication (and much over shorter distances), on frequencies below thirty megahertz, is the result of bending of the wave in the ionosphere, a region between about sixty and 200 miles above the Earth's surface where free ions and electrons exist in sufficient quantity to affect the direction of wave travel. Without the ionosphere, long-distance communication would be impossible.

Ionization of the upper atmosphere is attributed to ultraviolet radiation from the sun. The result is not a single region, but several layers of varying densities at various heights surrounding the Earth. Each layer has a central region of relatively dense ionization that tapers off both above and below.

The lowest useful region of the ionosphere is called the "E" layer. Its average height of maximum ionization is about seventy miles. The atmosphere here is still dense enough so that ions and electrons set free by solar radiation do not have to travel far before they meet and recombine to form neutral particles, so the layer can maintain its ability to bend radio waves only when continuously in sunlight. Ionization is thus greatest around noon, and it practically disappears after sundown.

In the daylight hours there is a still lower area called the "D" region, where ionization is proportional to the height of the sun. Wave energy in lower frequencies, four megahertz and below, is almost completely absorbed by this layer. Only the highest angle radiation passes through it and is reflected back to Earth by the "E" layer. Communications on these frequencies in daylight is thus limited to short distances.

The region of ionization mainly responsible for long-distance communications is called the "F" layer. At its altitude, about 175 miles at night, the air is so thin that recombination takes place very slowly. Ionization decreases slowly after sundown, reaching a minimum just before sunrise. The obvious effect of this change is the early disappearance of long-distance signals on the highest frequencies that were usable that day, followed by loss of communication on progressively lower frequencies during the night. In the daytime, the "F" layer splits into two parts, "F1" and "F2", having heights of about 140 and 200 miles, respectively. They merge again at sunset.[9]

When a radio wave passes through the ionosphere, the electron field of the wave exerts a force on the electrons of the ionosphere. The moving electrons cause conditions in the ionosphere that alter the path of the wave. The wave is bent away from the regions of high electron density, thus bending the wave back toward the Earth.[10]

The effect the ionosphere has on radio wave propagation is described in *Electronic and Radio Engineering*: " . . . each vibrating electron acts as a small radio antenna that abstracts energy from the passing radio wave, and then reradiates this energy."[11]

The bending of the wave is highly dependent on the ionized particles and electrons in the various layers of the ionosphere. The sunspots have a direct effect on the level of electrons. The greater the intensity of ionization in a layer, the more the wave path is bent. The bending also depends on wavelength; the lower the wave, the more its path is modified for a given degree of ionization. Thus, for a given level of solar radiation, ionosphere communications are available for a longer period of time on the low-frequency bands than near the upper limit of the high-frequency spectrum.[12]

Relationship Between Sunspots and Ionosphere

There is a direct relationship between the eleven-year sunspot cycle and propagation, because there is a direct relationship between the cycle and ionization. The intensity and character of solar radiation is subject to many short-term and long-term variables.[13]

The steady flux of solar ultraviolet and x-radiation maintains the ionosphere by ionizing a small fraction of the molecules of the Earth's atmosphere above the 100-kilometer level.[14] The level of ionization increases as sunspot activity increases, and thus accounts for increases in radio wave propagation.

Tilton gives research data[15] that shows the relationship between solar flux index and propagation. With several months of data, he shows how the increase in solar flux is followed several days later by an increase in propagation. On June 2-4, 1975, the solar flux had been at sixty-six. It began to rise on the next day and reached sixty-nine on the ninth. On the eighth, a major change was observed in a group of sunspots being observed, and, on June 11, the "A" index peaked as a result of the observed condition in the preceding days.

The frequency of radio wave that will be reflected is

dependent on the density of the ionized layers – the greater the density, the higher the frequency. Maximum sunspot activity causes the density to become greater than normal.[15]

The maximum usable frequency varies according to the time of day, season of the year, and the eleven-year sunspot cycle. For example, the maximum usable frequency during a year of low sunspot activity may be seven or eight megahertz, while in a year of high sunspot activity it may be forty megahertz or higher.[16] This variation is caused by the changes in the electron density in the ionosphere layers during these times. The condition of the ionosphere can be predicted based on the position of the sunspot cycle.[17]

The eighty meter band is useful for only about 200 miles during the daylight hours, with long distances possible at night, especially during low solar activity periods.

The forty meter band is similar to the eighty meter band with somewhat greater distances. The propagation path follows the line of darkness around the world, making long distances possible during the winter months.

The twenty meter band is best for long-distance propagation. During peak solar cycle years, the band is useful almost continuously. During low solar activity periods, it is good during daylight hours.

The fifteen meter band is greatly affected by the level of solar activity. Almost around-the-clock use is available during high activity periods for long-distance propagation. During intermediate activity, the band is useful mainly during daylight hours for long distance.

During peak solar cycle years, the ten meter band is useful for long distance during daylight hours. The useful time is shorter during intermediate years. When solar activity is at at a minimum, usefulness tends to be infrequent.

Variation in sunspot activity also occurs in the twenty-seven-day cycle, which is the time required for one rotation of the sun on its axis. The maximum usable frequency varies during this cycle from fourteen to twenty-eight megahertz.[18]

Some of the short-term effects on the ionosphere are solar flares and magnetic storms. Solar flares have a definite effect on the ionosphere, causing a sudden ionospheric disturbance. A new layer of ionization appears at a height of only sixty kilometers. Radio waves cannot pass through this layer and be reflected by the higher ionosphere layers. This causes long-distance radio communications to be degraded or blocked out completely for several hours. Solar flares show a high correlation between their occurrence and the eleven-year sunspot cycle.[19]

Magnetic storms can produce a type of absorption of the wave which will also disrupt propagation.[20] The storms occur most frequently during the sunspot cycle peak. They vary in intensity and duration, lasting from one to several days. They also recur at twenty-seven-day intervals since they are associated with a particular sunspot or group of sunspots.

Lower frequencies are affected by a decrease in daytime absorption and an increase in the signal strength. The higher frequencies, however, become useless, as if the refracting layers had disappeared.[21]

Summary

The condition of the Earth's ionosphere and the propagation quality for a given time are directly related to conditions in the sun.

Sunspots, one of several activities taking place on the sun, are primarily responsible for changes in radio wave propagation. This source of increased radiation causes an increase in the density of the ionosphere.

This increase in the density of the ionosphere causes an increase in the maximum usable frequency and the distance of wave propagation.

Man's interest in the sun is older than recorded history. Sunspots were seen and discussed thousands of years ago, and they have been studied since Galileo observed them with the first telescope ever made. Records of sunspot observations translatable into modern terms go back nearly 300 years.

Sunspots and their associated activity play a major role in the propagation of radio waves on the Earth.■

References

1. *McGraw-Hill Encyclopedia of Science and Technology*, 1960, sv "Sunspots."
2. Emmett J. Cable et al, *The Physical Sciences*, Prentice-Hall, Inc., New Jersey, 1959, pp. 506-507.
3. McGraw-Hill, op. cit.
4. E. N. Parker, *The Solar System*, W. H. Freeman and Co., San Francisco, 1975, p. 33.
5. McGraw-Hill, op. cit.
6. Edward P. Tilton, "The DXer's Crystal Ball," *QST*, June, 1975, pp. 23-25.
7. Frederick E. Terman et al, *Electronic and Radio Engineering*, McGraw-Hill Book Co., Inc., 1955, p. 855.
8. McGraw-Hill, op. cit., sv "Radio Astronomy."
9. *The ARRL Antenna Book*, The American Radio Relay League, Inc., Connecticut, 1960, pp. 17-22.
10. Terman, op. cit., p. 828.
11. Ibid., p. 289.
12. Keith Henney, ed., *Principles of Radio*, John Wiley and Sons, Inc., New York, 1959, pp. 509-510.
13. *The ARRL Antenna Book*, p. 22.
14. McGraw-Hill, op. cit., sv "Sun."
15. Edward P. Tilton, "Radio Astrology," *QST*, October, 1976, pp. 13-15.
16. McGraw-Hill, op. cit., sv "Radio Wave Propagation."
17. Terman, op. cit., pp. 827-828.
18. *The ARRL Antenna Book*, p. 22.
19. McGraw-Hill, op. cit., sv "Sun."
20. Ibid., sv "Radio Wave Propagation."
21. *The ARRL Antenna Book*, p. 22.

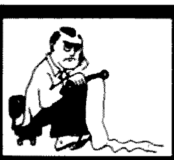

...de W2NSD/1

EDITORIAL BY WAYNE GREEN

from page 135

Malme. Both are long-time industry men and dedicated hams... it should work out well for Standard if they are given their heads.

JANUARY WINNER

Our $100 check for the best article in the Janury issue goes out to W. Edmund Hood W2FEZ for "Think You Understand SSB?", a better than 2-to-1 winner over its nearest competitor, "Test Those ICs!" by Howard F. Batie W7BBX/4.

CANADA PROPOSAL

The DOC is proposing cutting out the amateur 420-430 MHz band and adding one from 902-928 MHz. That's not exactly a good swap, but it's better than nothing... except that ham use would be secondary to the fixed service, which would mean that hams could use the band as long as they didn't interfere with the primary service.

CB LOSING IN AUSTRALIA?

The Australian government has done the unthinkable ... moved CB from 27 MHz up to 476.675 to 477.400 MHz ... still 40 channels. The government has given CBers until June 30, 1982, to get off 27 MHz. We won't find out whether they'll be able to make that stick for another four years.

PART 97—AMATEUR RADIO SERVICE

Sections 97.40, 97.43, 97.88, and 97.126 of the Commission's Rules Waived

AGENCY: Federal Communications Commission.

ACTION: Temporary rule waiver.

SUMMARY: This Order temporarily waives those FCC regulations which require that an Amateur operator receive FCC approval prior to beginning operation of a repeater, auxiliary link, control or remotely controlled station. The FCC is taking this action to grant relief to those persons who wish to place a new repeater station in operation. At the present time, the FCC is not processing applications for new repeater stations, pending completion of a review of its earlier decision (Docket 21033) to discontinue the licensing requirements for these stations.

DATES: This waiver is effective immediately and terminates as soon as the Commission releases a Memorandum Opinion and Order in Docket 21033.

FOR FURTHER INFORMATION CONTACT:

Joseph M. Johnson, Personal Radio Division, Federal Communications Commission, Washington, D.C. 20554, 202-632-7250.

In the matter of waiver of §§ 97.40, 97.43, 97.88, and 97.126 of the Commission's Rules. Order re waiver.

Adopted: February 9, 1978.

Released: February 14, 1978.

1. The chief, Safety and Special Radio Services Bureau, acting under delegated authority, has under consideration a waiver of §§ 97.40, 97.43, 97.88, and 97.126 of the Amateur Radio Service Rules. This waiver would suspend the present requirement that licensed amateur radio operators wishing to operate repeater, auxiliary link, control or remotely controlled stations must obtain Commission permission before commencing such operations.

2. In a combined Notice of Inquiry and Notice of Proposed Rule Making in Docket 21033 released on January 6, 1977, the commission proposed, among other things, to amend Rule §§ 97.40, 97.43, 97.88, and 97.126 to delete the present licensing requirement for repeater, auxiliary link, control, and remotely controlled stations. A Report and Order in docket 21033 released on September 27, 1977 amended these rule sections essentially as proposed. The amended rules were to take effect November 4, 1977; however, in response to petitions for Reconsideration and Stay from the American Radio Relay League, the Commission stayed the effective date of the Report and Order. In its stay, the Commission also ordered the continuation of its freeze on the acceptance of new repeater station applications filed after September 21, 1977.

3. As a result of the actions described above, no applications are now being granted for new repeater stations. We have been receiving many requests urging us to take some action to permit the operation of new repeater stations, and it is clear that some sort of administrative relief is warranted in this situation. We do not believe that a waiver of the Commission's Rules will, in this instance, prejudice consideration of the League's Petition for Reconsideration. If the Commission's review of its action results in approval of the league's request for continuation of separate licenses for repeater stations, then new repeaters will again be licensed. If the Commission affirms its Report and Order, then new repeater stations may be activated under the authority of an amateur's primary station license. In either event, amateurs could continue to build and put into operation new repeater stations. For this reason, a waiver of the pertinent rule sections on a temporary basis until such time as the Commission formally acts on the League Petition for Reconsideration appears warranted. when utilizing a primary station as a repeater or auxiliary link station, the station must be identified by the transmission of its call sign, followed, on telegraphy, by the letters RPT or AUX, as appropriate; and on telephony by the words repeater or auxiliary, as appropriate. All other rules applying to repeater, auxiliary link, control, and remotely controlled stations, other than those waived by this Order, are to be strictly observed by primary station licensees operating under the terms of this waiver.

4. Accordingly, the Commission, by the Chief, Safety and Special Radio Services Bureau, under authority delegated pursuant to Section 0.331 of the Commission's Rules, *orders*, That Sections 97.40, 97.43, 97.88, and 97.126 are waived to permit licensed amateur radio operators to operate their primary stations as repeater, auxiliary link, control, and remotely controlled stations without prior Commission approval. This waiver is effective immediately and terminates upon the release by the Commission of a Memorandum Opinion and Order in Docket 21033.

FEDERAL COMMUNICATIONS COMMISSION,
CHARLES A. HIGGINBOTHAM,
Chief, Safety and Special Radio Services Bureau.

[Docket No. 21135; FCC 78-76]

PART 97—AMATEUR RADIO SERVICE

Simplification of Licensing and Call Sign Assignment Systems in Amateur Radio Service

AGENCY: Federal Communications Commission.

ACTION: Final rules.

SUMMARY: The FCC is adopting new rules in the Amateur Radio Service eliminating secondary stations and special event stations. We are also amending the rules to assign all amateur station call signs on a systematic basis. We are taking this action to bring our amateur regulatory programs into closer alignment with the resources we have available. We expect our action will enable us to provide amateur radio licensees with better, more efficient service in other areas.

EFFECTIVE DATE: March 24, 1978.

ADDRESS: Federal Communications Commission, Washington, D.C. 20554.

FOR FURTHER INFORMATION CONTACT:

Gregory M. Jones, Personal Radio Division, 202-634-6619.

SUPPLEMENTARY INFORMATION: In the matter of the simplification of the licensing and call sign assignment systems for stations in the Amateur Radio Service (See 42 FR 15438); First report and order.

Adopted: February 8, 1978.

Released: February 23, 1978.

WHAT IS THE BACKGROUND OF THIS PROCEEDING?

1. In a Notice of Proposed Rulemaking in Docket 21135, released March 11, 1977, FCC 77-156, 42 FR 15438 (1977), the Commission acted on its own initiative and proposed several major revisions of its Amateur Radio Service regulations, 47 C.F.R. §§ 97.1, et seq. Comments on our proposals were due no later than June 2, 1977. Reply comments were due no later than June 30, 1977. The American Radio Relay League, Inc. (ARRL) petitioned for an additional thirty days in which to submit comments and reply comments. On May 19, 1977 the Chief, Safety and Special Radio Services Bureau, acting under delegated authority, denied the ARRL's petition, stating that the 83 day comment period the Commission provided was adequate, and that rapid resolution of the issues raised in the Notice of Proposed Rulemaking in Docket 21135 was essential. We have carefully considered our proposals and the comments submitted in response to our proposals. We are now prepared to take action in this proceeding.

WHAT WERE OUR SPECIFIC PROPOSALS?

2. In our Notice of Proposed Rulemaking in Docket 21135 we made several proposals which, if adopted as proposed, would have a significant impact on both the licensing of amateur stations and the assignment or call signs to amateur stations. Briefly summarized, our proposals in Docket 21135 were to simplify the licensing structure in the Amateur Service by discontinuing the issuance of all types of amateur station licenses, except space stations and so-called "primary" station licenses. Specifically, we proposed to eliminate—

Repeater stations, auxiliary link stations, and control stations.[1]
Military recreation stations.
Club stations.
Secondary stations.
Special event stations.
Radio Amateur Civil Emergency Service (RACES) stations.

We imposed an immediate "closed season" on the filing of applications for special event stations and new secondary stations. We also proposed to simplify greatly the regulations concerning the assignment of station call signs in the Amateur Service by replacing the current complex provisions with a concise rule stating that call signs will, in almost all instances, be assigned by the Commission on a systematic basis.[2]

WHY DID WE MAKE THESE PROPOSALS?

3. In adopting our proposals in Docket 21135 we acted in response to the greatly increased interest in personal radio communications in the United States. We stated that the number of Citizens Band Radio Service and Amateur Radio Serv- ice applications we were receiving were both at all time highs.[3] We also stated the record number of applications we were receiving had caused an extraordinary and sustained increase in the workload of the Commission's Personal Radio Division, and that, assuming no additional resources were to be forthcoming, we believed it necessary to take immediate steps to improve the efficiency of our license processing system, in order to prevent an unacceptable backlog of pending applications. We concluded that the increased demand for personal radio communications, taken with our limited resources, required that we assign priorities to our current licensing activities. Those activities found to be high priority—the issuance of operator and primary station licenses—were proposed to be continued. Lower priority activities—the issuance of special call signs and all non-primary station licenses—were proposed to be eliminated. In proposing the discontinuance of special call signs and non-primary stations, we noted that we were forced to allocate a large percentage of our resources to the maintenance of these programs, despite the fact that only a very small segment of the Amateur Service benefits from or takes advantage of them. We found the overall public interest would be best served by discontinuance of special call signs and non-primary stations, an action which would permit us to allocate our resources in a more effective manner than they are now allocated. Finally, we stated that although our proposals appeared radical, we believed actual operations in the Amateur Service would be affected little, if at all, by their adoption.

WHO COMMENTED ON OUR PROPOSALS?

4. We received approximately 400 comments and reply comments in response to our Notice of Proposed Rulemaking in this proceeding. Many of the comments received were submitted by amateur radio organizations, so the number of individual opinions reflected by the comments is considerably greater than the number of comments might by itself indicate. The remaining comments were submitted by individual amateur licensees and various governmental civil defense agencies.

WHAT DID THOSE COMMENTING ON OUR PROPOSALS SAY?

5. The large number of comments we received in response to our Notice of Proposed Rulemaking in Docket 21135 makes it impossible to discuss each comment individually. Each comment has been read and carefully evaluated by members of the Commission's staff, however. On the whole, the comments we received were highly critical of almost all of our proposals in this proceeding. Although there was limited support for a few of our proposals, the overwhelming majority of our respondents urged us to take no action whatsoever. In capsule form, the comments we received were along these lines—

a. We were urged not to eliminate the availability of club station licenses. Elimination of club station licenses would allegedly destroy a long-standing amateur radio tradition. See, Comments, JPL Amateur Radio Club. Many respondents, such as the Mobile Amateur Radio Club, stated that club stations are important contributors to the recent growth in interest in amateur radio, that club stations require a separate, distinct identity, and that club stations often play significant parts in emergency communications. The ARRL[4] and the M.I.T.-UHF Repeater Association claimed that at many schools and universities equipment and space for amateur stations are made available only to qualified student groups, not individuals, and that if club station licenses are eliminated, financial support of club stations at educational institutions is likely to be withdrawn. In sum, the comments attempted to argue that separate club station licenses are an indispensable part of today's Amateur Radio Service.

b. Most respondents commenting on the matter argued that separate licenses for repeater stations should be retained. To eliminate separate repeater station licenses would, it was alleged, encourage the construction and operation of "frivolous" repeater stations. Others stated that operation of a repeater station is a serious, and often expensive matter, and that effective spectrum management planning and coordination require that an amateur be placed on notice, by means of a separate repeater station license application, that "something more than the grant of a simple application is required." Comments, ARRL at 19. On the other hand, our proposed deletion of separate licenses for auxiliary link and control stations and creation of another form of amateur operation known as "auxiliary operation" met with general approval.[5]

c. The majority of those submitting comments opposed our proposal to eliminate secondary station licenses. Respondents such as the ARRL stated that "secondary station licenses are almost as old as amateur radio itself." Comments, ARRL at 23. Respondents such as the Pentagon Amateur Radio Club and Mr. Thomas J. Kirby cited the attachment of amateur licensees to long-held secondary station licenses as justification for the continued licensing of such stations. Others submitting comments argued that secondary stations are necessary to permit the maintenance of separate amateur stations by those with two or more homes in different parts of the country to enable the accurate pinpointing

[1] Repeater stations, auxiliary link stations, control stations and "WR" call signs are also under consideration in Docket 21033. We will deal with these matters in a Memorandum Opinion and Order in Docket 21033 and a Second Report and Order in this proceeding, to be considered simultaneously, in the near future.

[2] Amateur Extra Class licensees would be permitted to obtain certain non-specific call signs with desirable formats.

[3] Since release of our Notice of Proposed Rulemaking in this proceeding, the population of the Amateur Service has increased from 293,000 to 326,000 licensed operators.

[4] The ARRL filed its comments in this proceeding late but accompanied its comments with a Motion to Accept Late Filed Comments. We are granting the ARRL's Motion.

[5] Relatively few of those commenting in this proceeding addressed the licensing of repeater, auxiliary link and control stations, inasmuch as that was a primary subject of our proposals in Docket 21033. See n. 1, supra at 2.

of interference sources, and to permit the prompt receipt of correspondence from the FCC. The ARRL also argued that the number of secondary station license applications received by the FCC is so small that drastic action of the sort proposed by the FCC cannot be justified.

A few of those submitting comments agreed with us that separate licensing of secondary stations is unnecessary in today's Amateur Radio Service. See, e.g., Comments, Mr. James K. Maynard and Comments, Mr. Herman R. Schmitt. Others, such as the Intercity Amateur Radio Club of Richland, Ohio, noted that much of the previous need for separate secondary stations was eliminated by the FCC's Report and Order in Docket 20686, 61 FCC 2d 337 (1976), which greatly liberalized our rules governing the operation of amateur stations at portable and mobile locations. Finally, a number of respondents concurred with us in our belief that maintenance of separate systems for the issuance of secondary and primary station licenses cannot be justified in view of the relatively small numbers involved. See, Comments, Egyptian Radio Club.

d. Most comments did not address the question of whether military recreation stations should continue to be licensed, but of those that did, most opposed the proposal. The Secretary of Defense stated that the 425 licensed military recreation stations "make a significant contribution to the overall welfare, morale, and esprit of military personnel * * *." Comments, Secretary of Defense at 2. Such stations handle a substantial amount of third party traffic for military personnel and their families, and the continued success of the third party traffic program depends, in large measure, on a separately licensed, readily identifiable military recreation station. Id. The ARRL asked that the FCC recognize the unique problems of operating amateur equipment on a military base, as well as the contributions to the nation of those serving in the armed forces of the United States, and not eliminate military recreation stations. Comments, ARRL at 31-32.

e. Comments on our proposed elimination of special event stations were mixed, but for the most part urged the FCC to continue to license such stations. Although a few respondents, such as Mr. Carl J. Kennedy, agreed that processing of special event station license applications is probably an unjustifiable waste of the FCC's resources, most submitting comments said special event stations serve a valuable purpose and should be retained. Mr. William E. Moyes, for example, said special event stations provide significant exposure of the Amateur Service to the public, while the Mid-Continent Chapter of the Quarter Century Wireless Association noted that special event stations often generate much favorable publicity for amateur radio. Other respondents stated that a special event station call sign (e.g., NN3SI) is helpful in demonstrating amateur radio to the public, and that special event stations have contributed to the growth of amateur radio in recent years.*

f. Our proposal to discontinue the licensing of stations in the Radio Amateur Civil Emergency Service (RACES) was the subject of highly critical comment by many state and local civil defense agencies. The Sheriff of the County of Los Angeles stated that, if adopted, our proposal to eliminate RACES stations would erode RACES operations. It was alleged that requiring each amateur operator participating in RACES to use his own station call sign would cause a great deal of confusion, which could conceivably result in dangerous delays in the transmission of emergency communications. The Emergency Services and Disaster Agency of the State of Illinois also stated the existing practice of licensing RACES stations and assigning them distinctive call signs is satisfactory and should be continued. The city of Carson, Calif. claimed that our proposal, if adopted, would render $1.5 million worth of radio equipment in Los Angeles county unusable, while the ARRL said discontinuance of the licensing of RACES stations would be a "disaster". Comments, ARRL at 40.

*NN3SI is operated at the Nation of Nations exhibit at the Smithsonian Institution.

g. Our proposed simplification of the amateur radio call sign assignment system met a mixed reaction. Many respondents, such as Mr. R. P. Whitton, supported the proposal only with great reluctance, while others, such as the Dayton Amateur Radio Association, supported the proposal only as long as the rules were amended to insure that holders of "preferred" call signs be permitted to retain those call signs when moving from one call sign area to another call sign area. Other comments opposed our proposal categorically. The ARRL was particularly concerned with elimination of our "1×2" specific call sign program for Amateur Extra Class licensees. (A "1×2" call sign is a call sign consisting of one letter, one number, and two letters.) Permitting Amateur Extra Class licensees to choose their own call signs has, it was argued, been a powerful incentive for amateur operators to "upgrade" their operator licenses. Still other comments observed that station call signs are of extreme importance to amateur operators, and that the FCC should hesitate to take any action that would seriously affect the existing call sign assignment system.

What Rules Are We Adopting and Why?

6. With this Report and Order we are discontinuing the issuance of secondary and special event station licenses, and deleting from the rules all but one of those provisions which presently allow licensees to select specific call signs and/or call sign formats. In a separate Further Notice of Proposed Rule Making in this proceeding we are proposing to continue issuance of club, military recreation, and RACES station licenses, but with certain rule changes which should ease our workload.

7. The ARRL, among others, alleged in its comments that adoption of all our proposals would have only a very small effect on our operation. Comments, ARRL at 47. This argument is based on the erroneous assumption that elimination of all nonprimary station licenses and special call sign programs would result in a reduction in our workload in direct proportion to the number of non-primary station license applications we receive. Thus, the ARRL estimates that, assuming all our proposals are adopted, the processing workload would be reduced by only 5.43 percent.

8. Although it is true that the number of non-primary station and special call sign applications we receive each month is relatively few, their impact on the overall processing system is far out of proportion to their volume. Such applications take much longer to process than simple operator/primary station license applications. Their elimination will have a much greater effect on the efficiency of our processing system than the ARRL alleges. To resume processing secondary and special event station license applications, as well as special call sign requests, would require several additional positions.

9. We believe our action in adopting three of the proposals in this proceeding, however unpleasant it may be to some, is manifestly in the public interest. We recognize our responsibility to encourage the growth of the Amateur Service and believe our action in Docket 21135 will not significantly affect the development of a strong Amateur Service. We also believe, however, that we have an overriding obligation not only to amateur licensees, but also to the public-at-large, to use the public's tax dollars in the most efficient manner. Our action in this proceeding is intended to further that end. We emphasize that the amendments we are adopting will not adversely affect anyone. Operations in the Amateur Service will be conducted as they have in the past. No amateur equipment will become obsolete. In short, the administrative burden of these programs far outweighs whatever benefit they may have for the Amateur Service, and we are compelled to discontinue them.

10. In eliminating most non-primary stations and most special call sign programs, we make the following specific observations:

a. *Secondary stations.* It is true that secondary stations have been in existence for a long time. It is also true that some amateur radio licensees have held secondary station licenses for many years and have grown "attached" to their secondary station call signs. We continue to believe, however, that there is no need to continue to issue separate authorizations for secondary stations. Maintenance of a system to issue secondary station licenses is an unnecessary drain on our limited resources, particularly in view of the fact that a licensee can do no more nor less with a secondary station license than he can with his primary station license. Amateur operation will not be affected by the elimination of secondary station licenses. A licensee wishing to install a station at a location other than his primary station location may do so by simply operating his primary station portable or mobile. Interference from stations in portable operation may be detected the way it usually is today, through radio frequency direction-finding techniques. An amateur operating his station portable or mobile for an extended period should take steps to ensure that any FCC correspondence mailed to him arrives safely. There is, in sum, no compelling need to continue to license secondary stations in the Amateur Service. Existing secondary stations may continue to be operated until their license expiration dates. We will not renew or modify secondary station licenses, but we will permit holders of existing secondary station licenses to modify their primary station licenses to obtain the call signs of their secondary stations. In so doing, we are making a very limited exception to Section 97.51 of the Rules, which, after the effective date of the rules adopted in the Report and Order, prohibits the Commission from granting any request for a specific call sign.

b. *Special event stations.* In eliminating the future availability of special event stations, we agree with those submitting comments that amateur stations operated at certain public events, such as county fairs, have provided the Amateur Service with a great deal of favorable publicity over the years. We hope that amateur organizations will continue to engage in such activities in order to expose a larger segment of the public to amaeur radio and amateur radio operation. It is clear to us, however, that the operation of amateur stations at public events will not be affected in the least by the absence of a separate license authorizing such operation. Operation at a special event may be conducted just as easily under the authority of an ordinary amateur station license. The argument that distinctive special event station call signs contribute to the success of special event stations is invalid, because the average member of the public observing the operation of an amateur station could not possibly distinguish a special event station call sign from a typical amateur station call sign or understand the significance of a special event station call sign.

c. *Call sign simplification.* At its base, much of this proceeding is about call signs. As far as many of those submitting comments were concerned, the thrust of many of our proposals in this proceeding was directed not so much at the simplification of the station licensing system but at the simplification of the call sign assignment system. We believe, however, that the public interest is best served by elimination of most special call signs for amateur stations. We are therefore adopting as proposed our proposal to amend Section 97.51 of the Rules simply to state that all amateur call signs will be assigned by the Commission on a systematic basis. We believe the system by which we will be assigning call signs to be the fairest system possible. In virtually all instances, our system will involve the sequential alphabetical issuance of available call signs, beginning with the suffix AAA and proceeding letter by letter through AAB, AAC to ZZZ. For 1×2 and 2×2 call signs, of course, we will proceed from AA through ZZ. For 2×1 call signs we will assign the suffixes from A through Z. Section 97.51, as amended, does not specify the call sign assignment system we will be using. However, we will publicly announce the details of our system and any changes to that system, as they occur. We will require that an application for modification of station license be filed whenever the station location of a licensee is changed. However, under the new call sign rules we are adopting, a licensee moving from one call sign region to another will not necessarily receive a call sign of the same format when he modifies his license to reflect the move. In order to minimize the hardship on those licensees wishing to retain a call sign of a particular format (e.g., a "1×2" call sign) when moving to new call sign areas, we are changing our policy to permit a licensee to retain his original call sign, if he chooses, when the station location changes, even if the change of location is from one call sign region to another call sign region.

Further, to provide a licensee with additional incentive to "upgrade" the class of his operator license, we hope in the near future to be announcing a program to enable Advanced Class licensees, and perhaps General Class and Technician Class licensees, as well, to obtain upon request non-specific "1×3" station call signs. (A "1×3" call sign is a call sign consisting of one letter, one number and three letters.) As a service to amateurs, we will assign all new licenses outside the continental United States in the Pacific area call signs with the distinctive prefix "KH", followed by a digit denoting the island or group of islands where the station is located. All new stations outside the continental United States in the Atlantic area will be assigned call signs with the distinctive prefix "KP", followed by a digit denoting the island or group of islands where the station is located.

11. Accordingly, we order amendment of Parts 1 and 97 of our rules as set forth below effective March 24, 1978. Authority for this action is contained in Sections 4(i), 5(e), and 303 of the Communications Act of 1934, as amended. We also order acceptance of the ARRL's Petition for Acceptance of Late Filed Comments. We do not believe any useful purpose would be served by oral argument in this proceeding, and we are denying the ARRL's Request for Oral Argument. We order dismissal of any pending applications for secondary stations. We also order a continuation of this proceeding.

(Secs. 4, 5, 303, 48 Stat., as amended, 1066, 1068, 1082; 47 U.S.C. 154, 155, 303.)

Federal Communications Commission
William J. Tricarico,
Secretary.

The Federal Communications Commission amends Parts 1 and 97 of Chapter 1 of Title 47 of the Code of Federal Regulations, as follows:

1. Section 1.952(b) is amended to read, as follows:

§ 1.952 How file numbers are assigned.

* * * * *

(b) File number symbols and service or class of station designators:

Amateur and Disaster Services

Y—Amateur
D—Disaster
R—RACES

* * * * *

2. Section 97.3(c) is amended and in § 97.3(l) the definitions of secondary station and special event station are deleted, as follows:

§ 97.3 Definitions.

* * * * *

(c) *Amateur radio operator* means a person holding a valid license to operate an amateur radio station issued by the Federal Communications Commission.

* * * * *

(l) *Additional station.* Any amateur radio station licensed to an amateur radio operator normally for a specific land location other than the primary station, which may be one of the following:

Control station. Station licensed to conduct remote control of another

amateur radio station.

Auxiliary link station. Station, other than a repeater station, at a specific land location licensed only for the purpose of automatically relaying radio signals from that location to another specific land location.

Repeater station. Station licensed to retransmit automatically the radio signals of other amateur radio stations.

* * * * *

3. Section 97.40 (b), (c), and (d) are amended to read, as follows:

§ 97.40 Station license required.

* * * * *

(b) Every amateur radio operator shall have one, but only one, primary amateur radio station license.

(c) An amateur radio operator may be issued one repeater station license, one control station license, and one auxiliary link station license for a land location where another station license has been issued to the applicant.

(d) Any transmitter to be operated as part of a control link shall be licensed as a control station or as an auxiliary link station and may be combined with a primary or club station license at the same location.

* * * * *

4. In § 97.41, paragraphs (d) and (f) are deleted, paragraph (g) is redesignated paragraph (e), paragraph (e) is redesignated paragraph (d), and paragraphs (a), (b) and (d) are amended, as follows:

§ 97.41 Application for station license.

(a) Each application for a club or military recreation station license in the Amateur Radio Service shall be made on FCC Form 610-B. Each application for any other amateur radio station license shall be made on FCC Form 6100.

(b) Each application shall state whether the proposed station is a primary or additional station. If the latter, the application shall also state whether the proposed station is a control, auxiliary link or repeater station.

* * * * *

(d) One application and all papers incorporated therein and made a part thereof shall be submitted for each amateur station license. If the application is only for a station license, it shall be filed directly with the Commission's Gettysburg, Pa. office. If the application also contains an application for any class of amateur operator license, it shall be filed in accordance with the provisions of § 97.11.

* * * * *

5. Section 97.51 is amended to read, as follows:

§ 97.51 Assignment of call signs.

(a) The Commission shall assign the call sign of an amateur radio station on a systematic basis.

(b) The Commission shall not grant any request for a specific call sign.

(c) From time to time the Commission will issue public announcements detailing the policies and procedures governing the systematic assignment of call signs and any changes in those policies and procedures.

§ 97.53 [Deleted]

6. Section 97.53 is deleted.

7. In § 97.95, the headnote and paragraphs (a)(1) and (a)(2) are amended, as follows:

§ 97.95 Operation away from the authorized fixed station location.

(a) * * *

(1) When there is no change in the authorized fixed station location, an amateur radio station, other than a military recreation station or auxiliary link station, may be operated under its station license anywhere in the United States, its territories or possessions, as a portable or mobile operation, subject to § 97.61.

(2) When the authorized fixed station location is changed, the licensee shall submit an application for modification of the station license in accordance with § 97.47.

Ham Help

I am interested in direction-finding, both for emergency situations, such as ELTs and motorists stranded in fog or snow, and for locating troublesome signals. I have a URD-2 receiver, but cannot find its matching antenna, AS-410/URD-2. This looks like four dipoles arranged around a coaxial center antenna, but the center housing has a motor-driven direction-sending device in it. Does anyone know where I could get one?

Joel S. Look W1KCR
Box 25
Claremont NH 03743

I am interested in forming a full gospel Bible study group and sharing with other Spirit-baptized Christians.

Dale Richman W4NHM
Apt. 8
122 South Boulevard Way
Sevierville TN 37862

I have had a Rogers Majestic transmitter and receiver strip with power supplies donated to me, and I am trying to get it operating as a repeater for the local club. The receiver has the serial number 180 and model number CWE-9267. At present, I have no manuals or schematics for this unit. Any help in obtaining these would be greatly appreciated.

Rick Gibson VE3ASH
PO Box 1423
Kincardine, Ontario
Canada N0G 2G0

Can anyone loan (for copy and return) an instruction book or schematic for an AUL Instruments model TVOM3 solid state multimeter? The manufacturer admits making it, but doesn't know how.

John Cavett W2AUZ
8570 Herbert Ave.
Pennsauken NJ 08109

A little "Ham Help" is needed. I'm attempting to tap into a TS-520 i-f section with the Heath SB-610 signal analyzer. Obviously, analysis of the transmit signal is no problem, but connecting the proper i-f tap into the tuned vertical scope input is a problem I haven't been able to solve. Various values of coupling capacitors have been tried, tapping into all areas of the 520's i-f section to produce a usable signal on the scope during receive. Darned if I know what to try next. Any help would be most appreciated.

Ron Starr K0OXB/5
12309 Split Rail Parkway
Austin TX 78750

SWL with 15 years experience would like to be QSL manager for a ham in South America or the Pacific islands, particularly one of limited financial resources. Will pay costs of preparing QSL cards.

Donald E. Erickson
6059 Essex Street
Riverside CA 92504

Help! I am in desperate need of an LM1595 or MC1595 14-pin DIP IC. It is part of a speech processor for SSB on page 394 of the *Radio Amateur's Handbook*. If anybody has them or knows where to get them, I need two and will gladly pay any reasonable price for them.

Regis Briney, Jr. WB3KHR
1142 Goettman St.
Pittsburgh PA 15212

I need manuals or any info for the following: Shallcross model #638-2 Kelvin-Wheatstone Bridge; Ballantine model #305-A peak voltmeter; Philco "Mobiliner" model #5005 (sweep generator?). Any help would be greatly appreciated!

Clyde N. Smith
11 Brown St.
Reynoldsville PA 15851

I need a schematic for a Boehme frequency shift converter, type 5-C, serial number 1739-B, manufactured by Boehme, Inc., New York, N.Y., in the late '50s. I will gladly pay for copies or manuals if available. An address where I can send for information would also help.

Stan Glumac WB3CKV
Box 519
Grindstone PA 15442

I am starting a Protestant missionary traffic net. I call the net the M.A.R.T.I.N. B.I.R.D. net (Missionary Amateur Radio Traffic International Net—Best In Radio Domain). States will be numbered by numerical sequence by date of admission to the union. I would prefer NCS stations not in the larger cities, or stations who are operated by hams who can devote time to the net as it expands. Anyone interested should please write to me giving communication capabilities (equipment, time, etc.).

Harold Donaldson WB6SKV
8850 Phoenix Ave.
Fair Oaks CA 95628

Oscar Orbits

The listed data tells you the time and place OSCAR crosses the equator in an ascending orbit for the first time each day. To calculate successive orbits, make a list of the first orbit number and the next twelve orbits for that day. List the time of the first orbit. Each successive orbit is 115 minutes later (two hours less five minutes). The chart gives the longitude of the first crossing. Add 29° for each succeeding orbit. When OSCAR is ascending on the other side of the world, it will descend over you. To find the equatorial descending longitude, subtract 166 degrees from the ascending longitude. To find the time it passes the North Pole, add 29 minutes to the time it passes the equator. You should be able to hear OSCAR when it is within 45 degrees of you. The easiest way to do this is to take a globe and draw a circle with a radius of 2480 miles (4000 kilometers) from the home QTH. If it passes right overhead, you should be able to hear it for about 24 minutes total. OSCAR will pass an imaginary line drawn from San Francisco to Norfolk about 12 minutes after passing the equator. Add about a minute for each 200 miles that you live north of this line. If OSCAR passes 15 degrees from you, add another minute; at 30 degrees, three minutes; at 45 degrees, ten minutes. Mode A: 145.85-.95 MHz uplink, 29.4-29.5 MHz downlink, beacon at 29.502 MHz. Mode B: 432.125-.175 MHz uplink, 145.975-.925 MHz downlink, beacon at 145.972 MHz.

Oscar 7 Orbital Information

Orbit	Date (Apr)	Time (GMT)	Longitude of Eq. Crossing °W
15439 Bbn	1	0136:41	80.9
15451 Bbn	2	0036:01	65.8
15464 Abn	3	0130:19	79.4
15476 Bbn	4	0029:39	64.2
15489 Bbn	5	0123:56	77.8
15501 Abn	6	0023:17	62.7
15514 Bbn	7	0117:34	76.2
15526 Bbn	8	0016:55	61.1
15539 Abn	9	0111:12	74.7
15551 Bbn	10	0010:32	59.5
15564 Bbn	11	0104:50	73.1
15576 Abn	12	0004:10	58.0
15589 Bbn	13	0058:27	71.5
15602 Bbn	14	0152:45	85.1
15614 Abn	15	0052:05	70.0
15627 Bbn	16	0146:22	83.6
15639 Bbn	17	0045:43	68.4
15652 Abn	18	0140:00	82.0
15664 Bbn	19	0039:21	66.8
15677 Bbn	20	0133:38	80.4
15689 Abn	21	0032:59	65.3
15702 Bbn	22	0127:16	78.9
15714 Bbn	23	0026:36	63.7
15727 Abn	24	0120:54	77.3
15739 Bbn	25	0020:14	62.2
15752 Bbn	26	0114:31	76.7
15764 Abn	27	0013:52	60.6
15777 Bbn	28	0108:09	74.2
15789 Bbn	29	0007:30	59.0
15802 Abn	30	0101:47	72.6

Gary McClellan
PO Box 2085
La Habra CA 90631

Schottky: A New IC Generation

—runs significantly cooler

Progress marches on, and that holds true for IC technology. If you like to work with TTL logic, there's a new type of IC you should be aware of — low-power Schottky. This logic is fairly new and is just starting to be advertised widely, so you will be seeing it in more construction projects as more authors discover its value.

So what is low-power Schottky? It is basically like TTL ICs, but with an important difference — the input lines of each IC are clamped with Schottky diodes instead of regular TTL-style diodes. Fig. 1 shows a typical gate input with diodes. The diodes are there to suppress ringing and overvoltages on the input lines. However, standard TTL-type diodes have relatively high shunt capacitance, shunting some of the signal away from the input. This limits the performance of standard ICs to about 20 to 50 MHz or so. Now add Schottky diodes, which have dramatically reduced capacitance and which switch faster with less signal kept from the gate input. As a result, the circuit becomes faster. Typical low-power Schottky runs more than twice as fast as standard TTL. And there is more. The circuit elements on the chip can be made larger (resistors), which means less power is consumed. In fact, most low-power Schottky runs at about 1/5 the power consumption of regular TTL. So you see, there is a lot to gain, both speedwise and powerwise, with low-power Schottky.

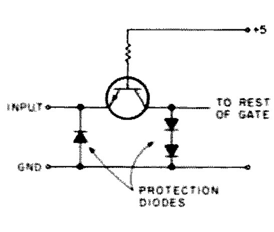

Fig. 1. Input circuit of gate or most other TTL ICs, for that matter.

Low-power Schottky can also offer some big advantages circuitwise. The first advantage is that low-power Schottky can be plugged in readily in place of standard TTL ICs. And better yet, circuit changes are seldom required. You can identify the most popular 7400 series by the addition of the letters "LS" between the "74" and the last two numbers. So a low-power Schottky (from here on "LS") part would look like this: 74LS00, which replaces 7400, or 74LS90, which replaces 7490. Another advantage is the increased speed, of course. A typical 7490 TTL decade counter IC will work to about 20 to 25 MHz. A 74LS90 will run from about 32 to 40 MHz and do it at 1/5 the power drain to boot.

The reduced power drain has great implications. Less drain means less strain on the power supply, be it battery or ac type. That means the batteries last longer, or there will be longer life for the power supply voltage regulator, which will run cooler. The filter capacitors will live longer because there will be less ripple on them and thus less self-heating. Are you sure you still want to keep using obsolete TTL?

But, to be fair, 74LSs do have some disadvantages. There are only two that will really concern you. The first one is that not all 74-series TTL have directly compatible 74LS cousins. This problem depends upon the circuit you are using. Prime candidates are the one-shots 74121 through 74123. There may be a little tweaking of the RC networks required to get the necessary pulse width. As for any others, the simplest way to locate and correct a problem is to substitute a standard TTL part for the one in question. I did this with a counter, where a single 74LS part had to drive the reset line of many TTL counters. It didn't work. But substituting a standard TTL part solved the problem, so I left it in. The other problem is that they are more noise sensitive than regular TTL. But with properly designed logic boards with good grounds and properly laid out power buses with bypasses, you shouldn't have any problems. 90% of the time you can just plug in a 74LS and have it work perfectly, so remember that!

Now that I have shown you the advantages and disadvantages of 74LSs, let's get to the heart of the matter and look at some real life applications. I'll also show you the results.

Counters can readily benefit from 74LSs. I have been involved with the design and manufacture of several units for years, and 74LSs have helped my designs tremendously. The first counter was the model 302, and it was designed in the fall of 1975, using CMOS and 3 TTL chips. This is one of the very first pocket-size frequency counters, and it measured frequency to a little over 20 MHz. Battery drain was around 125 mA — a little stiff from the power supply of 4 "AA"-size nicad batteries. Recently, I switched to 74LSs and gained plenty. The frequency range easily went to 30 MHz, and the power drain fell to under 100 mA in the worst case! None of the other parts were changed. Looking back on this change now, I realize that the LED display in this counter was the biggest current drain and not the TTL, as before. It's a nice improvement.

Another counter was improved with 74LSs. This one was my bench Heath 1B1103 unit, the one that goes to 180 MHz and has a low-frequency multiplier. I replaced all 7490s, about 16 of them, with 74LS90s. Then the 7475s went, all 8 of them. Then I replaced the 74151s, the 7400, the 7473s, the 7413, and so on. In fact, most of the ICs were changed. Only the ECL stuff, an op amp, and the 7441 nixie drivers stayed. It worked fairly well, but re-

placing IC211 with the old 7473 was necessary to cure a problem with the latching of the display. It then worked as well as before, the power consumption dropped to 30 Watts from 45 Watts, and the case ran a little cooler. The timebase stability improved slightly, and the power supply was dissipating less heat. The filter capacitors are still being run within their voltage ratings. In all, it was a successful conversion. It cost $29.00 in prime quality parts from Active Electronic Sales of Framingham MA to do the job.

Another gadget that gained from 74LSs was the Radio Shack ASCII keyboard I recently built for a data terminal. It "features" 18 old-fashioned TTL ICs. The current drain was 500 mA average. Then I switched to 74LSs. I was able to change every part but the 74154, which wasn't available, and the two 7410s – 74LS10s gave me trouble here. The result was an ASCII encoded keyboard that worked well and drew only 150 mA average. And that includes a 9 LED display that shows what ASCII code is sent when a key is pressed. Total cost was $12.00.

I would like to make a few comments concerning these applications before closing. 74LSs can be more expensive; the 7490s run 44 cents and the 74LS90s run 85 cents to $1.25 each, as this is written. However, Motorola is getting into 74LSs something big, and that should help to cut prices. Another thing is that there are a lot of quality parts on the surplus market – too early for junk, I guess, and that is amazing. I bought some 74LSs from a west coast parts house that is well known for super service and for selling not so super stuff (less known). I received some of the finest parts I have ever received from this house! So you are benefitting now and in the future. ■

Lloyd M. Jones W6DOB
17779 Vierra Canyon
Salinas CA 93901

Use Noise To Tune Your Station

—build this simple noise generator

For several years, there have been quite a few noise bridges available. The noise generators are all based on the use of noisy diodes (usually a 1N753, 6.8-volt zener, back biased) which go through two or three stages of transistor amplification and then into the various configurations of bridges. They all do a creditable job, but they use a great number of components and draw too much current. I have trouble with every one I build, because it is not possible to build two generators that would put out the same broad band of noise.

A noise bridge is a must for mobile operation, where the mobile antennas have a high Q and should be operated at very close to resonance. Using a bridge, you can QSY quickly and readjust the top section of the antenna for exact resonance. Plus or minus 10 kHz is about the tolerable excursion.

During the war in 1942, I was doing some research at the radiation laboratory at MIT, Cambridge MA. We needed a "white noise" source for jamming enemy radar. Recently, recalling that tube-version white noise generator, I built and tested a transistor version. The results were far superior to any of the systems I tried with the noise diode. Some diodes were so noisy that little amplification was needed; others made so little noise that even three stages of amplification were not enough, to say nothing of the undesirable added current consumption.

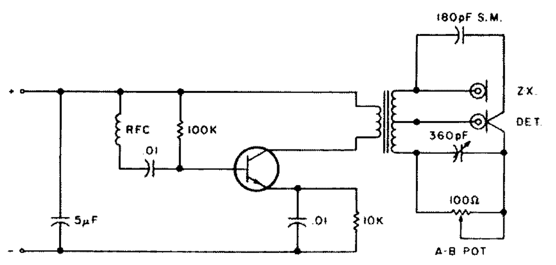

Fig. 1. Diagram layout for the noise generator. Note the special layout wiring arrangement for the output circuit. Both capacitor leads are the same length, and they terminate at one solder lug on the DET coax fitting. Keep the potentiometer leads as short as possible.

How does this new circuit generate such a wide band of frequencies? This oscillator may be described as a self-quenching device which is capable of generating square wave pulses with nearly ideal square wave. We know that a pure sine wave does not contain any harmonics. A sine wave with some distortion generates some harmonics. A "perfect" square wave generator will produce its fundamental frequency plus all the higher frequencies to infinity. With the materials used to produce this "perfect" square wave, we find that the usable bandwidth is actually far short of infinity. Lacking sophisticated measuring equipment, my tests indicate that the usable noise frequency is from somewhere around 500 kHz to far beyond 30 MHz, the amplitude remaining quite constant over the entire bandwidth.

Oscillation starts at 1½ to 2 volts and continues at a nearly constant level on all the HFs up to 20 volts. At 3 volts, the current drawn is about 200 microamps. At 20 volts, the current drawn is about 6 milliamps. This is ideal, whether you want to use the bridge with two AA cells, a 9-volt transistor radio battery, or 13 volts from your car battery.

Several types of NPN transistors, high gain and in metal can or plastic, were tried. Most of them worked; however, I found that 2N2222 transistors are the most easily obtained. They are cheap, and I recommend them.

There are three components that must be given special notice. They are the RFC, the number of turns on the toroid and the manner in which they are wound, and the disc ceramic capacitors. The .01 disc capacitors must be the 1,000-volt variety. Several dozen units have been built and sold with no problem, with these precautions taken.

The RFC consists of 24 to 26 turns of enamel #26 to #30 wire wound on a form about 4 to 6 mm (3/16 to 1/4 inch) in diameter and about 17 mm long (11/16"). The form to hold the wire may be any reasonably good insulator, such as a plastic knitting needle or a piece of #8 house wire with the wire removed from the plastic insulation and a wooden match stick inserted in place of the wire to make it rigid. A 1/2-Watt ohmite-type of resistor, more than 100,000 Ohms, also worked fine.

The toroid coil is wound on a T-50-2 (red mix) core. The core is rated for use between 500 kHz and 30 MHz.

For the primary winding on the core, which will connect to the transistor collector and to the positive voltage, wind 24 turns as follows: Hold the toroid in

Fig. 2. PC board — actual size.

your fingers, in a horizontal plane, and make the first turn with the starting end of the wire sticking up out of the core about 5 cm (2 inches). Now make the first turn so that the long end of the wire will come out of the toroid on the right side of the starting wire. The next turn will come out of the toroid on the left side of the starting wire. The completed primary winding will have a bundle of 24 turns, or 12 turns on each side of the starting wire. By doing this, we have a coil with minimum stray capacitance coupling between primary and secondary.

The secondary, or output winding, will be 12 turns of bifilar, wound and connected to give a total of 24 turns. Cut two pieces of the same enamel wire about 40 cm (16") long. Put two ends together in a vise, and twist them about 1 twist per cm (2½ twists per inch). Wind twelve turns on the toroid, leaving about 5 cm (2") of wire out of the toroid on both ends. Use a pocketknife to carefully remove all the enamel far enough back toward the toroid so that you can cut off the excess length not needed for making the connections to the coax connectors, bearing in mind that the two outside ends of the winding should be exactly the same length.

Select a wire from each end of the winding and test with an ohmmeter to find two wires that do not show continuity. Connect those two wires together. Now you should test to make sure that you do have continuity on the remaining two wires. This gives you the two bifilar windings in series, with a center-tap, or 24 total turns. Adjust these windings on the toroid core so that the primary and secondary windings have equal spacing between the two coils on both sides.

The toroid core with its windings should be mounted on a small plastic or wood pillar about 2 mm (5/8") long and cemented on the PC board. The white silicone cement available at nearly any store is ideal for this purpose.

Refer to the PC board layout. Follow the pattern quite closely and all the parts will fit nicely into place. The values of all the components are indicated in Fig. 1. The diagram showing the Rx pot, the 360 pF variable capacitor, the 180 pF fixed capacitor, and two coax connectors should be studied and used as a guide for making it a balanced system. That is, the lead lengths of the fixed 180 pF capacitor should be the same length as the lead of the 360 pF variable where they connect to a solder lug at the detector (DET) output coax fitting. The lead to the 100-Ohm ohmite pot should be as short as possible. The PC board is shown actual size, and it may be used as a template to make small punch marks on the copper foil. All of my boards were laid out using G-C Electronics' .080" printed circuit drafting tape available at nearly all electronic stores.

With all the components in place and soldered, you are ready to test the unit. Run an antenna wire or coax from your receiver to the output of the noise generator. Even though you do not use a piece of coax at this time, a single wire from the receiver antenna input connected to either one of the output wires will permit a strong signal to be heard if the system oscillates. Apply 5 to 10 volts to the noise generator with the proper polarity, and there should be ample noise. Check for oscillation at 1½ volts or 2 volts, then increase the voltage to as high as 20 volts. No noticeable change in noise level should take place if the system is working properly.

As shown in the diagram, one of the outside bifilar wires will go to the nearest outside lug on the 100-Ohm pot. Also, the stator of the variable capacitor will go to this same point. The center lug on the pot and the rotor tab from the variable capacitor go to ground, which should be the lead connected to a solder lug under one of the four bolts holding the detector coax connector. Next, connect the center-tap wires from the toroid winding to the detector coax fitting center lead. The remaining single wire from the toroid winding will connect to the Zx coax fitting center lead. At the same connector, solder one end of the 180 pF silver-mica capacitor to the center conductor and the other end of the capacitor to ground at the same detector coax fitting. Short leads from the toroid should be equal in length to maintain a good balance.

The potentiometer (variable resistance) will be labeled Rx. The variable capacitor will be labeled Cx, with a center position which will be used for measuring circuits with neither inductive nor capacitive reactance. The coax fitting that has the center tap of the toroid winding will be labeled detector. (In this case, it will be your receiver.) The third wire will go to the other coax fitting and will be labeled Zx, which means the "unknown impedance," such as an antenna system, coil-capacitor combination, etc.

Calibrate the Rx potentiometer by using an ohmmeter which has reasonably good ohmic calibration. Calibration points should be made at 10, 20, 30, 40, 50, 75, and 100 Ohms. The radius for your calibration marks should coincide with the dial pointer that you use.

Now you may check the use of the variable capacitor. First, suppose you insert a 50-Ohm noninductive resistor with short leads into the Zx outlet. Carefully null both dials for the deepest null. Remove the resistor and solder on two leads about 20 cm (8") long. Connect these leads to the Zx outlet. You will now have to adjust the variable capacitor to regain a deep null, tuning out the inductive reactance. Then repeat the same process with a 50 to 100 pF capacitor connected in parallel with the resistor. Note that the variable capacitor must now be adjusted to the opposite side of center to obtain a null and tune out the capacitive reactance. You may calibrate the capacitor dial, if you wish, but I just eyeball the dial pointer and approximate the value of reactance as being somewhere between 0 (at the center of the dial adjustment) and 180 pF capacitive or

inductive.

Now you are ready to put the instrument to use. Connect a receiver to the detector via a short piece of coax and connect the antenna to the Rx connector. With the instrument turned on, you should hear a husky roar from the receiver. With the Cx dial set at the half scale position and the Zx dial set at about 50 Ohms, tune the receiver until you hear a partial null of the noise. When you get a minimum noise dip, adjust the Rx and Cx and the receiver tuning for a complete null. The receiver dial will tell you where the antenna is resonant. On doublet antennas, the null will be fairly sharp – ± 10 kHz. On a high-Q mobile antenna, the null will be very sharp – ± 2 kHz.

For mobile antennas with an impedance of 30 to 75 Ohms, on which a short transmission line is used, I would not worry about impedance matching. The exception is that the Atlas and other solid state transmitters must work into 50 Ohms, or they will not load up. This is an excellent system and requires the operator to definitely design the antenna system to have a 50-Ohm feedpoint impedance. (Many matching systems not properly adjusted cause more loss than there would be without them.)

Below 30 Ohms, I would definitely use a matching system. A fixed capacitor at the base of the antenna to ground was never satisfactory for me. The more usual 7 to 10 turns of #10 or #8 wire about 4 cm (1½") diameter do a good job on 75, and a few less turns do a good job on 40. I would like to point out that a mobile antenna feedpoint impedance is dependent upon the location of the "center" loading coil. The longer the top section is (and fewer the turns in the loading coil), the higher the feedpoint impedance will be, within reason. ■

Andrew Ring
267 Middle Road
Yarmouth ME 04096

How To Thwart Ma's Dial System

— Touchtone™-to-dial converter

Photos by Ronald Turner

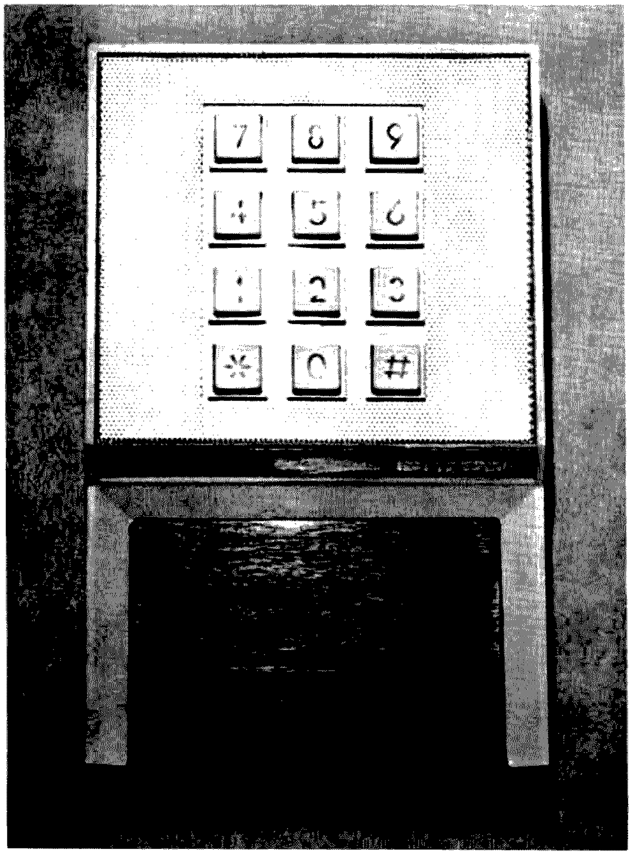

There are still many towns and cities that do not have touchtone™ telephone facilities, and it looks as though this will be the case for quite some time to come. But you who live in these areas now can enjoy the ease and convenience of making calls by pushing buttons. You can also have the fun of building your push-button phone converter.

The circuit described here uses two Motorola ICs and one common gate IC. Twelve push-button switches are connected to an MC14419, which accepts a 2 of 7 grounded input and gives a binary coded output corresponding to the button pushed. The second IC, an MC14408 or MC14409, accepts the BCD input and outputs two signals. The OPL output gives a burst of pulses equal to the number desired. The DRO output goes high at the beginning of the pulse

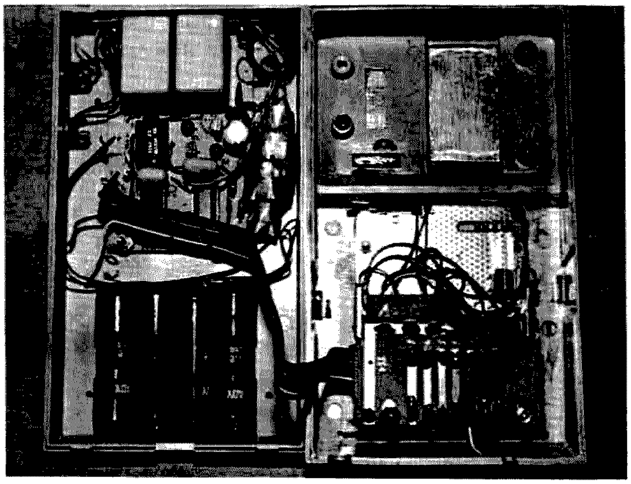

burst and goes low after the last pulse in that digit if the 14409 is used. In the 14408, DRO will go high at the same time but will remain high until the last pulse of the last digit of the number called. Two other inputs used in this circuit are CRQ and RED. When CRQ is taken low (Vss), internal counters are reset, and the IC is made ready for the next call.

A very nice feature of this chip is the memory. Each number called – up to 16 digits long – is entered into memory and remains there until power is removed or another call is made. This number can be recalled simply by resetting with CRQ and then taking RED low. Of course, only the last number called will be in memory, but maybe some computer nut reading this will find a way to connect some RAM or ROM to the BCD input and store many numbers. If someone does, I hope he will drop me a line and tell me how.

The data sheet that comes with the MC14409 has a very complete schematic of a modified Western Electric K-500 telephone, so I will not describe that here. The push-button telephone converter is for the person who may not want to modify his phone to that extent or perhaps not want to use a phone at all. How about replacing the push-buttons with a handful of relays and connecting the output directly to the phone lines for use in a repeater station without tone facilities? In any case, Ma Bell would probably like to have something to say about it, but that's between you and Ma Bell.

Incidentally, beware of the push-button connection shown on the MC14409 sheet. It's wrong. Use the one on the MC14419 sheet or the one described here. If you prefer a push-button pad with the buttons laid out in the standard adding-machine format, as I do, most pads can be disassembled and the buttons rearranged. One exception is the Chomerics pad. The one I like best is made by Automatic Electric and can be purchased from Meshna in Lynn MA for about $7. The button action is very nice, and it can be rearranged easily.

The purpose of the CD4001 is to activate the CRQ input when * is depressed and the redial feature when # is depressed. This leaves one NOR gate for future use, if desired.

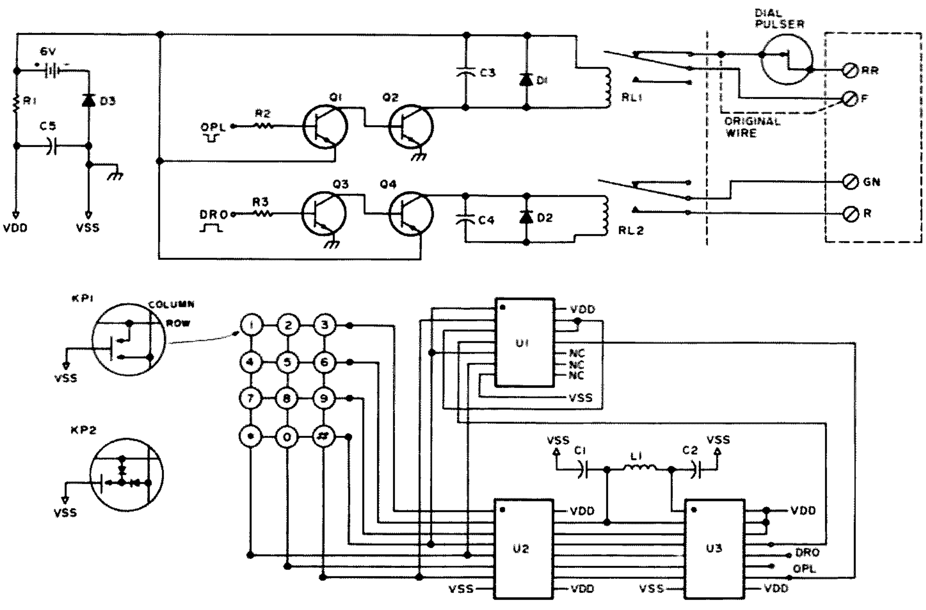

Fig. 1.

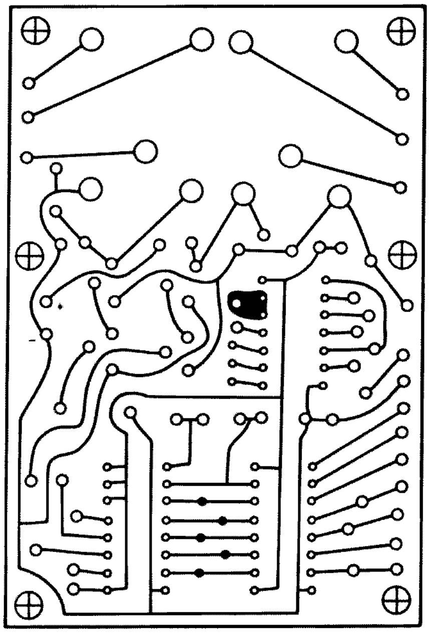

FOIL SIDE

Fig. 2. PC board – foil side.

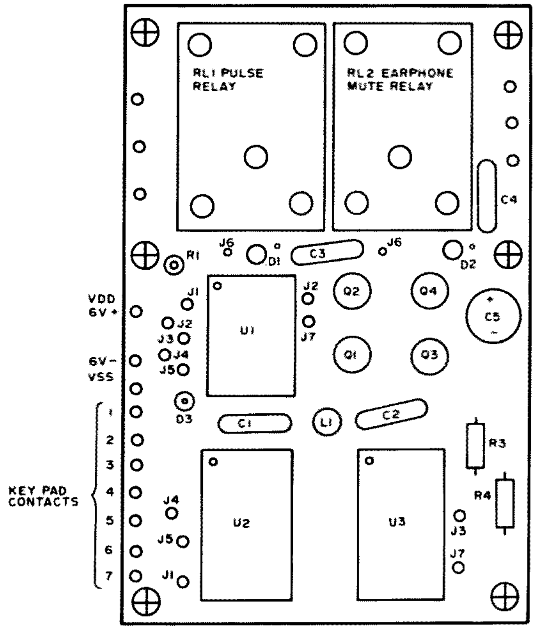

COMPONENT SIDE

Fig. 3. PC board – component side.

Outputs from pins 11 and 12 are amplified by Q1 and Q4 and drive the two relays. Connection to any telephone is extremely simple. Disconnect one lead from the dial pulser inside the telephone, and connect the NC contacts of RL1 in series with this lead and the network. This is enough to make the system work. However, the clicks in the earphone will be quite loud. If this is objectionable, run 2 more wires, and connect the NO contacts of RL2 across the earphone. This will mute the earphone while the pulsing is going on.

Addition of this converter will not change the operation of your original rotary dial. Either the old dial or the new push-buttons may be used to ring up a number.

The use of CMOS chips makes an on/off switch unnecessary. Use good batteries, and you should find their life quite long. AA alkaline cells will do fine.

Happy button-pushing. ■

Parts List

R1	100 Ohm, ¼ Watt
R2, R3	100k Ohm, ¼ Watt
C1, C2	.04
C3, C4	.022
C5	100 mF, 12 volt
D1, D3	1N4004
Q1, Q4	2N3906
Q2, Q3	2N2222
U1	CD4001 Tri-Tek, Glendale AZ
U2	MC14419 Tri-Tek, Glendale AZ
U3	MC14409 Tri-Tek, Glendale AZ
L1	4.7 mH, Cramer Electric, Newton MA
KP1	12 DPST push-buttons or 12 SPST push-buttons with diodes, as shown
B1	four 1½-volt cells in series
RL1, RL2	6-volt coil, SPDT contacts, Tri-Tek

The Double Whammy Mobile Clarifier

—tune out the wife and kids

John Skubick K8JS
1040 Meadowbrook
Warren OH 44484

It isn't easy to listen to a mobile rig with a car full of two or more children or nonham adults, especially when the mobile rig's tinny, raspy built-in speaker directs the audio under the dash or into the deep-pile carpeting. A separate speaker under the dash or in a console/floor mount is no good either, even though it may be aimed up toward your head.

This listening problem is caused by the fact that the above-mentioned speaker systems in your car are about the same distance from your ears as the voices from the other occupants. Turning up the rig's volume only causes the other passengers (especially adults) to subconsciously raise their voices to compensate for the rig's loudness. The passengers and passenger compartment are acting like an agc mixing chamber to your ears!

There are many solutions to this problem. I chose to devise a civilized course of action by greatly reducing the distance between the mobile rig's acoustical output and my ears. This installation had to be small, neat, and cheap. A speaker mounted on the ceiling seemed like the way to go. Since I couldn't find a small, thin commercial speaker, I built one.

Most of the parts came from Radio Shack. The enclosure is an aluminum chassis measuring 4½ x 2½ x 1 in. (11.43 x 6.35 x 2.54 cm). The exact size isn't very critical. The idea is to keep it small and thin.

The two speakers had to have one side of their rims filed flat so that they could fit inside the specified enclosure. The speakers were wired in parallel and contact cemented at their rims inside the chassis enclosure. The speaker output ports consist of two 1½-inch (3.68 cm) holes punched into the enclosure box, to get maximum sound output. I felt that this was much quicker and neater than trying to drill a bunch of cute little off-center holes and ending up with a junky appearance.

Don't worry about the 4-Ohm speaker impedance. You will find that a solid state amplifier with an 8-Ohm output will work often the same or louder into a 4-Ohm system. Many solid state mobile rigs have 4-Ohm audio output, anyway.

The backplate is simply a sheet of aluminum cut to cover the rear opening. Do not leave this off. Otherwise, it may have the typical tinny sound many metal-boxed so-called "communications speakers" seem to have. Instead of attaching the backplate with screws, I strongly suggest contact cement. This will insure against resonance buzzing, and the speaker can still be easily removed with a little prying.

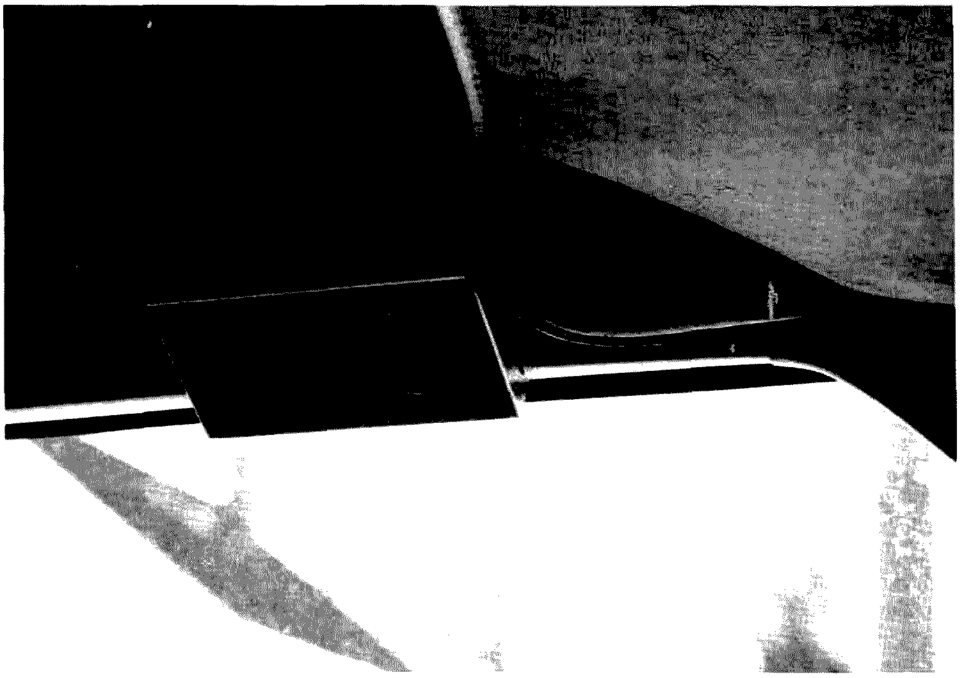

Very efficient small, one-inch-thick (2.54 cm) mobile speaker above driver's door window. This one is mounted in a Cadillac.

Mounting

Here are two suggested ways to mount your speaker. If your car has a plastic-type ceiling, try using a little dab of contact cement on the back of the speaker near each of the four corners. It won't hurt the ceiling material, and it can be easily removed should you decide to relocate the speaker.

Another method is to use double-sided foam tape. I found that this won't stick (for over 10 minutes) on plas-

tic-type ceilings, but it will adhere to the inside door-edge molding (if your car has one). In this case, part of the speaker is on the molding and part on the ceiling material — sort of at a 45 degree angle, aimed right at your ear. This is the method I ended up with. Incidentally, adhesive foam tape won't hurt the mounting surfaces, is easily removed, and is found in most discount variety stores. The photo shows the foam tape method.

My audio cable is thin speaker wire with miniature phone plugs at both ends — one for the rig and one for the speaker. This cable is routed under the dash, along the "crack" between the dash and body, and up the side between the windshield and corner post. It is entirely hidden, except for a couple inches at the speaker. With the visor up, even that is hidden (see photo).

Speaker Phasing

A very important point to remember is that both speaker cones must move in the same direction at the same time. This is easily accomplished by wiring up the speakers and attaching and detaching a fresh 1½-volt battery across the speaker leads to observe the directional movement of both cones. If both speaker cones are moving in and out in the same direction when the battery is connected and disconnected, then all is well. If not, then simply reverse the leads to only one of the speakers, and try again.

The reason for having two speakers is a matter of getting increased efficiency plus a better response in such a small enclosure.

Results

This speaker turned out to have suprisingly good voice quality, and it is very efficient! For example, it certainly improves the low audio output from an Icom 230. With other rigs that have several Watts of audio, such as the Koyokuto FM-144, the volume control is just cracked open a little.

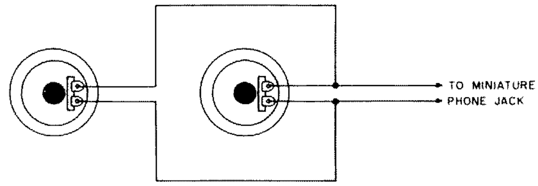

Fig. 1. Rear view drawing of two 2½-inch miniature speakers wired in parallel. See text for proper phasing. The enclosure has two 1½-inch-diameter holes, one for each speaker. Mount the speakers as close to each other as possible.

Also, it seems that the passengers aren't bothered by it and tend to talk lower. Meanwhile, to you, it is giving plenty of QRM-free volume. I believe this type of speaker system is very usable for hams who are family men or schools bus drivers!

When I describe my mobile speaker system and its intended purpose, many have asked me, "Why not use headphones instead?" Well, I tried them, and they are no good while driving. They tend to isolate the driver from his total driving awareness and could be creating a potentially dangerous situation. Apparently many states think so, too, such as New York, because they prohibit wearing headphones while operating a motor vehicle.

After using this inexpensive little speaker positioned near my head in the car, I have come to the conclusion that it is definitely superior to what I and others have been using in the past while driving and QSOing in a fully occupied family auto.

Inquiries accompanied by an SASE will be gladly answered. ■

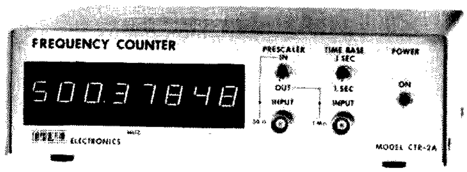

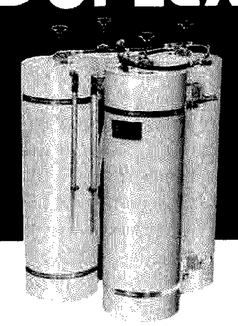

Bob Thornburg WB6JPI
13135 Ventura Blvd.
Studio City CA 91604

Danger! Microwave Radiation!

—just how much is dangerous?

Whenever I talk to a group of amateurs about using microwaves for linking or other forms of communication, I am always asked, "Aren't microwaves dangerous? Won't they sterilize or otherwise damage my body?" The answer to these questions must be, "Yes, but . . . " Like a lot of things in a high-technology society, there is some danger, but the major problem is due to ignorance. The 120 V ac line into your radio can easily kill you, but that doesn't stop you from talking because you understand (or at least respect) the potential (pun intended) for the ac line to do you in. The same is true of the kilowatt(s) of rf energy in your HF transmitter and even (under rare conditions) the 12 volts in your car. These things you understand and have experience in handling, and, although they are dangerous, they don't stop or even slow you down much.

Microwave energy is nothing more than ordinary rf that has its frequency too high. There is nothing otherwise different about it. The higher frequency allows it to be concentrated (visualize it as being "focused"), and here is where it gets into trouble. We will get back to this, but first let's look at how animal parts and people cook.

The danger to people is the same property that cooks meat in the microwave oven. People parts cook, too. Of particular susceptibility are the eyes. The abnormal heating (cooking) of the eye causes a reaction in the cornea (lens) to protect itself by growing a protective layer over the lens (not unlike a blister on a burn, except it's permanent). This growth, or cataract, causes blindness. Other parts of the body are also susceptible to damage due to heating, including possible generic changes to your offspring from immediate exposure to your reproductive parts, but the required heating is several orders of magnitude greater than that required to make cataracts. Note that the damage is just overheating — no death rays, no magic, nothing but abnormal heating of living tissue. Other parts can cook, too. The moisture in the stuff that makes up people creates a lossy medium to all rf, including microwaves. You can be a dummy load at most all frequencies where your dimensions are greater than a significant fraction of a wavelength. Also, you usually can't feel yourself cooking, as the stuff with the moisture doesn't have the proper nerve endings to sense what is happening. You don't feel a thing all the way from rare to well done. Now that we know what happens and have an idea as to how it happens, let's look back to the microwaves and see how much of them it takes to cook.

The measurement of cooking capability is Watts per square centimeter. This parameter is known as power density and is the value to respect. Frequency alone is not the factor. It doesn't really matter how high the frequency is; what counts is the power density. This is the cooker. Now let's play with some equations.

Power density of a radiated signal can be calculated by: $P_D = P_T G_T / 4\pi R^2$, where P_D is the power density, P_T is the radiated power, G_T is the antenna gain, and R is the distance from the antenna to where the power density is to be determined.

Note that power density goes up with power available, goes up with increased antenna gain, and goes up the closer to the radiating source you are (less distance). Note that frequency isn't even allowed to enter this basic equation. So why condemn microwaves for their frequency? You'll see . . . Also note that, at zero distance (R = 0), the power density is infinite. Nature doesn't like infinites, so there is another phenomenon that controls power density at very close distances from an antenna (anything that radiates is an antenna, even a leaky oven door). When looking at the rf fields very close to an antenna, you can only "see" part of the antenna and can't get the full effect of the power density defined by the equation above. The region where you are too close for the above equation to apply is the "near field region" and extends to a point defined by $R_{NF} = \pi D^2/8\lambda$, where R_{NF} if the distance of the near field range, λ is the wavelength, and D is the major dimension of the antenna.

Within this region, the fields are getting organized and figuring out what it is they are supposed to be doing. The power density is flailing about but is about equal to or less than the value at R_{NF}. So, the maximum power density is that found at R_{NF}. Combine these two equations to find this value:

$$P_{Dmax} = 16 P_T G_T \lambda^2 / \pi^2 D^4$$

Now we have frequency in the act (or its relative wavelength: $\lambda = C/f$, where C is the velocity of light). But, as frequency goes up, wavelength goes down and the power density also goes down. This is backwards from what we have been led to believe: The higher the frequency, the *lower the power density*? Well, you can't believe equations anyway. Let's look at some examples: Consider a 100 Watt transmitter at 2 meters operating into a 10 dB gain antenna (D

= 3 meters, as in a superstation master). P_{Dmax} = 20 Watts/meter^2, or in the more common dimensions, P_{Dmax} = 2.0 milliwatts/cm^2.

Now let's just move the problem to 450 MHz (λ = .67m, D = 1 meter): P_{Dmax} = 18.2 mW/cm^2.

Aha! Frequency went up and so did the power density; maybe equations don't lie. Note that our examples have been in the VHF/UHF band. The equations also work there, but our concern is with microwaves. But first let's discuss what level of power density is important. Where do we have a problem? Just like with voltage: 5-10 volts can't give you much of a shock, but 250 volts can really wake you up. At what level is power density a problem?

Well, here is where the experts don't all agree. Some say 10 mW/cm^2 is safe for a few hours exposure (to the most vulnerable eye); others say 50 mW/cm^2 for a short term; still others say continuous exposure of 1 mW/cm^2 will not cause damage. Certainly a microwave oven at 150 mW/cm^2 can do damage rather quickly. Well, to us this is a hobby. We don't have to make a living risking our body parts or defending our country from the deck of an aircraft carrier being sprayed by a dozen multimegawatt radars, so let's use the lowest number, 1 milliwatt/cm^2.

Now that we have established our worry level at 1 milliwatt/cm^2, we can also note from our example above that the 100 Watts at 450 MHz surely exceeds this level, and we aren't even in the "deadly" microwaves yet. Really, what I am saying is that danger exists at UHF and even VHF frequencies as well. Don't radiate 100 Watts of UHF less than 5 feet (R_{NF}) from your body. On to the microwave problem.

Let's do some more examples. How about a 10 Watt source at 1200 MHz radiating from a 4-foot diameter dish (gain = 21 dB)? The maximum power density is 1.5 mW/cw^2 – well in the "don't look now" range. How about these new Gunn sources making 20 milliwatts at 10,000 MHz with a 17 dB gain horn (D = 3.5 inches)? Power density is also 1.5 mW/cm^2. is nothing safe? How about our Gunn source just radiating out of its waveguide (G = 7 dB; D = 1 inch)? Well, look out (pun intended), the power density is 8.8 mW/cm^2. Well, removing the antenna made it worse; let's put a 19-inch dish (32 dB gain) on the source and find that the maximum power density dropped to .021 mW/cm^2 even though the effective radiated power increased from 100 milliwatts to 32 Watts. Ah, the mysteries of microwaves.

Also be fully aware that we have been calculating the maximum power density available anywhere around the antenna. If you move 6 inches away from the antenna in the 10 GHz, 20 mW, 17 dB gain example, the power density drops from a maximum of 1.5 mW/cm^2 to 0.342 mW/cm^2, and, in general, a little way away from all the above examples, the radiation is safe. But, it can be dangerous; have respect.

This note has hopefully shed some light and generated some insight into the danger of microwave radiation. The nature of the danger and the mechanism causing it has been exposed, and, hopefully, any fear about using microwaves you might have had is or can be converted to simple respect. Danger exists; you can be hurt messing around with these weird frequencies, but don't let that stop you. By the way, it is recommended that you don't sign your microwave QSOs with "here's looking up your old waveguide . . ." ■

Corrections

In reference to my article, "Track OSCAR In Real Time," which appeared in the November issue of *73 Magazine*, several readers have written or called for help in getting it up and running. Their problems have fallen into three categories: new owners of HP-67 calculators, not yet familiar with the instruction set of the calculator; failure to load the constants before attempting to run the program; and confusion caused by my use of the computer programming symbol "*" to indicate multiplication instead of "X", which I should have used in an HP-67 program.

I will record the program on cards for any reader who sends me two blank HP-67 cards (one for the program and one for the data constants) accompanied by an SASE and his station latitude and longitude.

Thomas Prewitt W9IJ
2212 S. Webster
Kokomo IN 46901

Another correction for my "FCC Math" series, this one brought to my attention by Francesco Turella I3SWU. My apologies for letting this one slip through. In the February issue, on page 14, in the right-hand column, 2/3 of the way down: 2 x 3 x 6 x 1 = 36, not the 24 I somehow came up with. And that's, of course, 3.6×10^1 instead of 2.4×10^1. Dividing 3.6 into 10 gives about 3. So we get 300 kilohms instead of 400 kilohms at 60 Hz. Sorry about that!

John F. Leahy WB6CKN
Gonzales CA

This is in reference to my article, "Visual OSCAR Finder," in the November, 1977, issue. You may want to publish the following modification:

1. Change the 1k ½ W resistor in the power supply to a 12Ω ½ W.
2. Change the 3200 uF capacitor in the first 555 timer to a 33 uF tantalum.
3. Change R1 to a 1 meg pot.
4. Change the 10k above **R1** to 1 meg.
5. Change the 68k below R1 to 1 meg.

These changes make the timing more stable. I have gotten a lot of mail response on this article, showing a high rate of interest. PC boards are still available.

Michael J. DiJulio WB2BWJ
Maplewood NJ

Social Events

CHARLOTTE NC
APR 1-2

The Mecklenburg Amateur Radio Society, W4BFB, will hold its 1978 Metrolina Hamfest on April 1-2, 1978, in Charlotte's new Civic Center. Plenty of parking will be available. The Roanoke Division of the ARRL will hold its annual convention in conjunction with this hamfest.

PITTSBURGH PA
APR 2

The University of Pittsburgh Amateur Radio Association's (W3YI) second annual hamfest will be held on Sunday, April 2, 1978. Festivities will be from 10 am to 5 pm in the Student Union Building across from the Cathedral of Learning. (Note: Meter parking is free on Sundays!) Check-ins on .69/.09 and .52/.52. For detailed information (and a map), send an SASE to the University of Pittsburgh Amateur Radio Association W3YI, Box 304 Scheniey Hall, Pittsburgh PA 15260, or call Mark Bell WA3VJL at (412)-931-6700 or Harry Bloomberg WA3TBL at (412)-624-7768.

TOWSON MD
APR 2

The Greater Baltimore Hamboree will be held on Sunday, April 2, at 8 am at Calvert Hall College, Goucher Blvd. and LaSalle Road, Towson MD 21204 (1 mile south of exit 28, Beltway-Interstate 695). There will be food service, prizes, and a giant flea market. Admission charge is $2.50. 250 tables inside the gym and cafeteria. Over 2000 attended last year. For information and table reservation, contact Bro. Gerald Malseed W3WVC at the school or call (301)-825-4266.

COLUMBUS GA
APR 8-9

The Columbus Amateur Radio Club will hold its annual hamfest on April 8-9, 1978, at the Columbus Municipal Auditorium at the fairgrounds. Spacious, air-conditioned exhibit area, prizes, flea market, Saturday night banquet, FCC exams, and a luncheon will be featured. For further information, please contact Eddie Kosobucki K4JNL, 5525 Perry Ave., Columbus GA 31904.

ST. CLAIR SHORES MI
APR 9

The South Eastern Michigan Amateur Radio Association's annual hamfest will be held April 9, 1978. The hours will be 8 am until 3 pm, and the location is South Lake High School, 21900 E. Nine Mile Road at Mack Ave., St. Clair Shores, Michigan. This location is in the Detroit metropolitan area. For additional information, please contact, by mail or by phone, Philip R. Walker WD8BYE, 26541 Ridgemont, Roseville MI 48066, (313)-778-1297.

NEWINGTON CT
APR 9

The Pioneer Valley Repeater Association (PVRA) flea market and auction will be held on Sunday, April 9, 1978, from 10:00 am to 5:00 pm at Newington CT. Setup time starts at 9:00 am. This is an event for everyone. There will be planned family activities, food available, and free parking. The flea market and auction will run simultaneously in separate rooms. The auction will be held at regular posted intervals, with all items to be sold at each time slot on display before each auction. The ARRL Club and Training Department will have a Novice information booth to answer questions and provide League information. A guided tour of the League's new headquarters building will start at 2:00 pm. Those planning to take this tour should drop Arnie K1NFE a note indicating how many will be in their party. Talk-in will be on 19/79, 04/64 and 52 simplex. Admission will be $1.00, tables $5.00, and auction commission 10%. For additional information and guaranteed flea market space, contact: Arnie DePascal K1NFE, 20 Iowa Pl., Bristol CT 06010.

MADISON WI
APR 9

The Madison Area Repeater Association's 6th annual swapfest will be held, rain or shine, on Sunday, April 9, 1978, at the Dane County Expo Center Youth Building, Madison WI. Electronic equipment and components for hams, computer hobbyists, and experimenters. Delicious food, free movies, arts and crafts—bring the whole family for delicious food and entertainment. Tickets are $1.50 in advance, $2.00 at the door. Tables are $2.00 in advance, $3.00 at the door. Excellent overnight camping accommodations. Make check or money order payable to MARA, Box 3403, Madison WI 53704. Reservations must be in by April 1, 1978.

WELLESLEY MA
APR 15

The Wellesley Amateur Radio Society will be conducting its annual auction on Saturday, April 15, 1978, beginning at 11:00 am, at the Wellesley High School cafeteria on Rice Street, Wellesley, Massachusetts. Talk-in will be on 96/36, 04/64 and 52. Doors open at 10:00 am. Contact Kevin P. Kelly WA1YHV, 7 Lawnwood Place, Charlestown MA 02129.

ROCHESTER MN
APR 15

The Rochester Repeater Society will hold its hamfest on April 15, 1978, at St. John's Grade School, 420 West Center Street, Rochester, Minnesota. Doors open at 9:00 am. Door prize donations $1.00; admission $1.00; children under 12 free; $2.50 for tables. Plenty of parking available. Talk-in on 146.22/82 WRØAFT and 52. Take I-90 to Rt. 52 or Rt. 63 and go north. For advance ticket sales and information, contact Joe Fishburn KØTS, 2514 4th Avenue, N.W., Rochester MN 55901, (507)-288-2676, or Gary Sharp WD8AMA, 1610 34th St., N.W., Rochester MN (507)-282-5119.

MOBILE AL
APR 15-16

The Mobile Amateur Radio Club will hold its annual hamfest and computerfest at the University of South Alabama in Mobile AL on Saturday and Sunday, April 15 and 16, 1978. Swap and shop indoors both days from 9 am 'til 5 pm. Activities for the ladies and children. Campsites are available. Over 2000 are expected for the biggest fest on the Gulf Coast. For more information, contact: Ed Coker WA4VPI, 7650 Ashley Court, Mobile AL 36619.

POMONA NJ
APR 16

The Shore Points Amateur Radio Club will hold its first annual hamfest on Sunday, April 16, 1978, at Stockton State College, Pomona NJ. It will be from 9 am to 4 pm, rain or shine (sellers come at 7 am). There will be more than 200 indoor table spaces ($4 each) and 400 tailgating spaces ($2 each), an

from page 31

"S"-meter, and ten Watts of audio which may be used with an external horn for hailing purposes.

Hams who are CBers and own Horizon units may have them converted to ten meters at Standard's remanufacturing centers. The suggested distributor price for converting the 29 to 29-10 is $20.00, the 29 to 29A-10, $40.00, and the 29A to 29A-10, $25.00. New transceivers may be purchased at $106.95 (23 channels) or $119.95 (40 channels). Both converted and new units have a 90-day factory warranty. A data sheet is available to all amateurs. *Standard Communications Corp., PO Box 92151, Los Angeles CA 90009.*

THE HALTED SPECIALTIES VHF AMPLIFIER

Some of the most recent additions to the growing line of VHF signal boosters are the Klitzing amplifiers distributed by Halted Specialties Company. While the name "Halted" may be new to many hams, I can assure you that their gear is of top quality. One of the Klitzing amplifier's main advantages is its linear class operation. This allows the unit to be used for FM, SSB, CW, or SSTV without modifications or switches. Limiting yourself to class C amplifiers can reduce future expansion interest—like SSB or OSCAR.

I recently began using one of these 50-Watt amplifiers with my OSCAR setup and 2 meter handie-talkie, and the unit worked beautifully. The HT truly gained "seven league boots" when used mobile with the amplifier. Operation through distant repeaters became "duck soup" when the amplifier was switched on, and my fringe area transmissions became full quieting to receiving stations. The advantage of increased power is definitely worthwhile—particularly while traveling or vacationing! I also appreciated the capability of remote-locating the amplifier and carrying the HT when leaving the car. This arrangement doesn't leave any gear showing under the dash to entice thieves.

My main purpose in securing this 2 meter amplifier was for boosting my OSCAR uplink signal. Naturally, this required a linear amplifier which could also take the strain of SSTV operations. The Halted Specialties unit worked beautifully. My OSCAR setup includes an Icom IC-202 transceiver, and its 3 Watts output is a perfect match for the 3- to 50-Watt amplifier.

A brief technical evaluation of the amplifier produced the following results. The rf sensor used for T/R switching keyed perfectly, with input levels ranging from 0.5 Watts to 5 Watts. Likewise, the overdrive of 5 Watts (FM mode) didn't appear to adversely affect amplifier operation.

The amplifier includes external keying contacts which can be used for 400 milliwatt or lower driving signals. T/R switching dropout time is continously adjustable with an internally-mounted potentiometer. Although I have no intention of trying these features, it's reassuring to know that the amplifier also includes reverse voltage polarity and infinite swr protection.

All aspects considered, the Halted Specialties amplifiers are an outstanding dollars-per-Watt investment. In my opinion, the amplifier's construction and performance is excellent.

The complete line of Klitzing amplifiers (6 meters through 70 cm, 50 Watts through 160 Watts) is distributed by *Halted Specialties Company, 729 E. Evelyn, Sunnyvale CA 94086.* My particular amplifier is a 2M3W50A, which sells for $129.

Dave Ingram K4TWJ
Birmingham AL

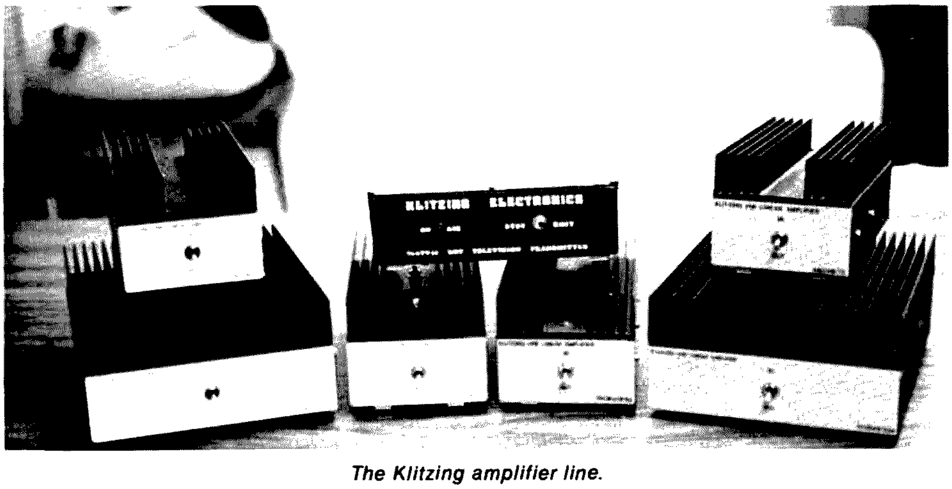

The Klitzing amplifier line.

THE YAESU FT-227R TRANSCEIVER

Do advertisements present a creditable account of radio transceivers' capability? That's a question always present in the mind of a potential purchaser. It was lingering in my mind while I was awaiting the delivery of a new Yaesu FT-227R, but some doubt began to fade as soon as I began to unwrap the long-awaited unit.

Yaesu does an excellent job of packaging its equipment. The basic transceiver and a full complement of accessories are neatly nestled in the box, each protected by a heavy plastic covering. Yaesu knows the value of first impressions!

Before the plastic was removed from the transceiver, the instruction manual was extracted from its pouch and given a thorough perusal. It's well-prepared, written by someone familiar with the English language, and provides full instructions for setting up, operating, and maintaining the transceiver. Photographs are shown to illustrate the location of various sections and parts of the set's interior. Other photographs display the front and rear view of the unit and provide identification of each control or indicator. Thumbing through the manual brings one to the parts list, which is really complete, and to the master schematic wiring diagram. This latter item is impressive and pleasing. It spreads out when unfolded, providing enough detail to follow circuits with relative ease. Note the use of that word "relative." The FT-227R is far from a simple piece of electronic gear, and its schematic reflects its complexity.

The real unveiling of a transmitter or receiver comes when it's hooked to an antenna and a power supply. The FT-227R performed just as the literature said it would! Oh, there was one small exception, one of utterly no moment. When first turned on, instead of displaying 147.00 on the digital indicator, it showed 145.050. But with that small exception, everything worked as I had been led to expect.

Any frequency from the low end to the high end of the two meter band can be dialed in just by turning one knob. That knob has detents so that one can dial by feel as well as by sight, a feature sure to be appreciated by sightless users and by car drivers who'd like to keep an attentive eye on the road.

Once you've dialed in an oft-used frequency, a touch of a button marked M (for memory) sets that frequency up for future use. Now you can go to any other frequency and retain the ability to go back to that favorite one just by a touch of another button marked MR (for memory recall). You can erase the memory and replace it with another one with equal ease. There's just one small glitch: If the primary power to the transceiver is interrupted, the memory is lost. Just turning off the set's on-off switch does not clear the memory, so if the set is installed in your car, all is fine. In your shack, however, where you'd normally be switching the ac power to a 13.6 V power supply, be prepared to reset the memory (as well as any other frequency) each time the primary power is applied. As the set draws only 0.5 A in the receive mode, you may select to let the power supply run constantly.

And that brings us to another handy feature. In addition to the squelch normally included on all VHF FM transceivers, this one has a visual indicator of an incoming signal. With this feature, you can have the af gain turned off and still note channel activity by a glance at the BUSY visual indicator. Another plus factor is that all the visual indicators are bright enough to be seen readily in strong ambient light.

Operation of the transceiver has brought only satisfying reports. Uniformly, the quality reports have been good. Used on a ¼-wave indoor antenna, it accesses all repeaters in the

metropolitan Oklahoma City area. And, in area, Oklahoma City is one of the largest cities in the United States, dwarfing those ten times its population! On simplex, it performs very well even on its low-power position (one Watt output), covering distances of several miles. (This with an inside ¼-wave antenna within a house shielded by aluminum siding!)

All repeater offsets can be coped with. The standard +600 and −600 can be taken care of with just a twist of a knob. Nonstandard offsets require the use of the memory to nail down one frequency while another is dialed. "Split" frequencies, those involving a five-kilohertz spacing, are reached easily by pushing a button marked 5 UP... very simple, very logical.

The internal speaker is bottom-facing. For use in the shack, a stand, which attaches to the case, holds it up for forward-facing sound. For mobile installation, the husky attaching mount is adjustable over a wide range, adequate to adapt the transceiver to almost any location.

Like any other real-world equipment, the FT-227R has a few negative aspects. For one, it's big, a bit too big to fit into some of the smaller cars now becoming popular. From the rear of the coax connector to the front of the microphone plug is a trifle over 13 inches. From the head of one mounting bolt across to the head of the other mounting bolt is 8.5 inches. From the bottom of the case to the top of the mounting bracket is 3.5 inches... and that figure doesn't allow room for sound from the down-facing speaker. Some persons might find it inconvenient to twirl a dial across many 10-kHz detents to jump from one repeater to another when they're sampling half a dozen channels. The microphone impedance falls into the category of "classified" information," which will outrage those who'd like to make use of a combination microphone-Touchtone™ pad. The microphone jack is on the far right-hand side, which means the cord will have to be stretched across the transceiver for use by the driver of a vehicle.

Ah, but it takes an inquiring soul or a confirmed nitpicker to root out faults in such a pleasing package! The average user will be delighted with his FT-227R. It has just about every feature he would desire, at a price that doesn't shake him to the very base of his billfold.

Carl C. Drumeller W5JJ
Warr Acres OK

PRIDE PM-1500 WATTMETER

Knowing your forward power and reflected power can be awfully useful, particularly when trying out a new antenna or making any number of changes an amateur is likely to make from time to time in his setup. Thus, having a compact and accurate wattmeter such as the Pride PM-1500 can be a real convenience.

The PM-1500 has five scales: 0 to 5, 0 to 25, 0 to 150, 0 to 500 and 0 to 1500 Watts. So, whether you are a QRPer or like to run the full legal limit, the meter will do the job for you.

Packaged in an attractive black crackle-finished box with gold panel, the PM-1500 has just two controls, a toggle switch for rev/fwd power and a five-position switch to select the appropriate power range to be measured. *Pride Electronics, 6241 Yarrow Drive, Carlsbad CA 92008.*

Morgan W. Godwin W4WFL
Assistant Publisher

HEATH LOW-COST 3-BAND SCANNING MONITOR

The Heath Company offers a solid-state automatic scanning monitor said to be ideal for fire or police stations, emergency vehicles, and home listening. Covering three bands (30-50, 146-174, and 450-500 MHz), the GR-1132 monitors public service transmissions including police, fire, weather, and emergency operations, and in addition operates in the 2 meter amateur band and on marine FM frequencies.

Receiver sensitivity is 0.5 uV or less, and the GR-1132's operational features include: priority channel (checks selected priority channel every 4 seconds), automatic or manual scan selection, built-in speaker, volume, and squelch controls, and lighted channel scanning indicators. The unit incorporates individual telescoping antennas for each band of operation and, for convenience, may be operated from an internal ac power supply or external 12 V dc source.

For further information on the GR-1132, write *Heath Company, Dept. 350-560, Benton Harbor MI 49022.*

The new Amphenol 83-58FCJ coax cable jack.

NEW SOLDERLESS AMPHENOL IN-LINE COAX CABLE JACK

A new Amphenol® in-line UHF coax cable jack that can be installed in seconds without special tools or solder—also eliminating all need for PL-259-to-PL-259 adapters previously required—has been developed as a follow-up to last year's introduction of the widely-accepted Amphenol no-solder 83-58FCP fast-assembly PL-259 connector for RG-58/U. The new companion in-line splice jack also uses the innovative "FCP" termination approach. The result is extremely fast cable termination—less than 20 seconds.

Whenever an in-line antenna or hookup coax cable splice is needed, the user has only to strip the cable, insert the center conductor into the back of the connector, and slide the ferrule into place. Once accomplished, termination is complete. The result is a handy, in-line SO-239 receptacle that will accept any PL-259 plug—directly.

All need for a second PL-259 connector plus PL-259-to-PL-259 adapter has been eliminated—at great savings in terms of space, cable weight, and, most important, purchase price for all these individual components.

Called Amphenol UHF Cable Jack 83-58FCJ, the new device easily handles all power levels up to maximum ratings of the RG-58/U coax cable itself. And, unlike conventional solder connection techniques, the 83-58FCJ can be easily disassembled and reused.

Amphenol 83-58FCJ connector adapters have a frequency range of 0-300 MHz, and a voltage rating of 500 V peak. Thermal limits are -67° to +300° F. They also have standard 5/8-24 threads for simple, screw-on mating with conventional UHF plugs.

The manufacturer's suggested retail price for the solderless Amphenol 83-58FCJ jack is $1.64. Availability is through a nationwide network of general line electronic parts distributors.

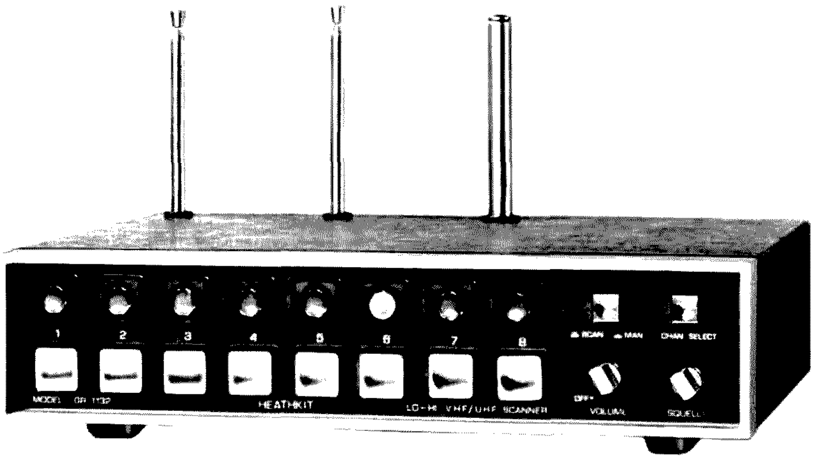

The Heathkit GR-1132 scanning monitor.

FCC Math

from page 17

with another to get that total resistance. In other words, we're after R_1 or R_2, want to get R_1 or R_2 by itself with everything else on the other side. What we have now (applying our number work to the formula) is $R_tR_1 + R_tR_2 = R_1R_2$. How do we go from there?

Say we want to get R_1 by itself. Referring to the number equation, $2(3) + 2(6) = 3(6)$, you'll notice that the 3 is in the R_1 position. Again, we have the problem that there are two 3's, and, to complicate things further, both of those 3's are being multiplied by some other number. But there are all sorts of tricks devised over the ages, all very logical, that enable us to get past just about any roadblock we encounter. One, that we've already seen, is doing the same thing to two numbers which are equal. If we start off with equals and then do the same thing to both or all, we are bound to still have equals. In our case, $2(3) + 2(6)$ equals $3(6)$. Let's subtract $2(3)$ from both sides. If I do that, I get rid of the $2(3)$ on the left, and here's what I have: $2(6) = 3(6) - 2(3)$. Now, at least I have both 3's on the right-hand side.

Note first that $3(6) - 2(3)$ is the same as $3(6) - 3(2)$. $2(3)$ equals $3(2)$, in other words. It doesn't make any difference what order, which comes first, when multiplying two numbers. Next, note that $3(6) - 3(2)$ is the same as $3(6 - 2)$, much the same as $2(6 + 3)$ equaled $2(6) + 2(3)$, only in reverse. Putting all that together, we now have: $2(6) = 3(6 - 2)$. We're getting there, little by little, but we *are* getting there. Now bring that $(6 - 2)$ as a unit down from top right to bottom left and we have it: $2(6)/(6 - 2) = 3$. We have the 3 by itself on one side. Now, remembering that 2 is R_t, 3 is R_1 and 6 is R_2, we have $R_tR_2/(R_2 - R_t) = R_1$. By playing around with numbers (never actually adding, multiplying, or subtracting, etc., but just moving them around), we came up with a formula for R_1.

Admittedly, what we did was pretty complicated. It's algebra, of course, a fairly complicated subject. But the incredible thing is that just by playing around with numbers we can develop and/or discover all the rules, algorithms, etc., of an algebra course, or of the algebra needed in electronics for FCC exams.

Now another little exercise. Again, work and answers at the end.

Exercise 2:

(1) Take that same formula, $R_t = R_1R_2/(R_1 + R_2)$, and solve for R_2, again employing the number equality, $2 = 3(6)/(3 + 6)$. Here, you want to get the 6 by itself on one side.

(2) $Swr = (V_f + V_r)/(V_f - V_r)$ is a formula in which swr is standing wave ratio, V_f = forward voltage, and V_r is reflected voltage. Solve for V_r! What is V_r when the swr is 2 and V_f is 75 V?

WORK AND ANSWERS TO EXERCISES

Exercise 1:

(1) $P = I^2R$, $P/R = I^2$, $\sqrt{P/R} = I$.

(2) $I = \sqrt{P/R} = \sqrt{5/200}$. 5/200 is $(50 \times 10^{-1})/(2 \times 10^2)$, or 25×10^{-3}, which is 2.5×10^{-2}, or 250×10^{-4}. $\sqrt{250 \times 10^{-4}}$ is about 16×10^{-2}, or 0.016.

(3) (a) 382 is 3.82×10^2. 3.82 is close to 4 simply, so $\sqrt{3.82 \times 10^2}$ is about 2×10^1 or 20.

(b) 0.000018 is 1.8×10^{-5} or 18×10^{-6}. 18 is close to 16, so $\sqrt{18 \times 10^{-6}}$ is about 4×10^{-3} or 0.004.

(c) 520,000,000 is 5.2×10^8. 5.2 is close enough to 4 that $\sqrt{5.2 \times 10^8}$ is about 2×10^4 or 20,000.

(d) 0.0000000000047 is 4.7×10^{-12}. Again, 4.7 is close to 4 simply, so $\sqrt{4.7 \times 10^{-12}}$ is about 2×10^{-8} or 0.000002.

Exercise 2:

(1) $2 = 3(6)/(3 + 6)$, then $2(3 + 6) = 3(6)$. Next, $2(3) + 2(6) = 3(6)$. Subtract $2(6)$ from both sides, giving: $2(3) = 3(6) - 2(6)$ or $6(3 - 2)$. Then bring the $(3 - 2)$ down to the left and we have: $2(3)/(3 - 2) = 6$. Now, putting R's in their proper places, we have: $R_tR_1/(R_1 - R_t)$, which is the same formula as for R_1.

(2) $Swr = (V_f + V_r)/(V_f - V_r)$. First step: $swr(V_f - V_r) = V_f + V_r$. Then: $swr(V_f) - swr(V_r) = V_f + V_r$. This time *add* $swr(V_r)$ to both sides and subtract V_f from both sides. That gives: $swr(V_f) - V_f = V_r + swr(V_r)$. This is now somewhat tricky. We must now keep in mind that V_f and V_r have a hidden 1 multiplying them. That's because when we do our little reverse stunt, we need that 1—otherwise, we lose part of our equation. With the 1's written in, our equation now looks like this: $swr(V_f) - 1V_f = 1V_r + swr(V_r)$. And now when we pull that reverse stunt that we did with numbers before, we get: $V_f(swr - 1) = V_r(1 + swr)$. If you didn't have that 1, you'd just multiply the swr alone and wouldn't get what you started off with. The final step is to bring the 1 + swr or swr + 1 (you get the same value either way) from top right to bottom left, to get: $V_f(swr - 1)/(swr + 1) = V_r$.

That's a complicated process we just went through. Try it with a number equation, and you'll find it's more understandable. I purposely did it directly with letters just to show that you *can* do that kind of thing. Of course, when you get good at algebra (some people *are* that way, you know), a lot of these steps are done in your head.

Plugging in the values given, we now have: $[75(2 - 1)]/(2 + 1) = V_r$. That's 75/3 or 25 volts that V_r equals. $(2 - 1)$ of course equals 1, and 75×1 is simply 75.

Again, let me emphasize the importance of playing around with numbers. Processes that seem awfully difficult because of the abstraction of letters become quite easy with small numbers.

Review

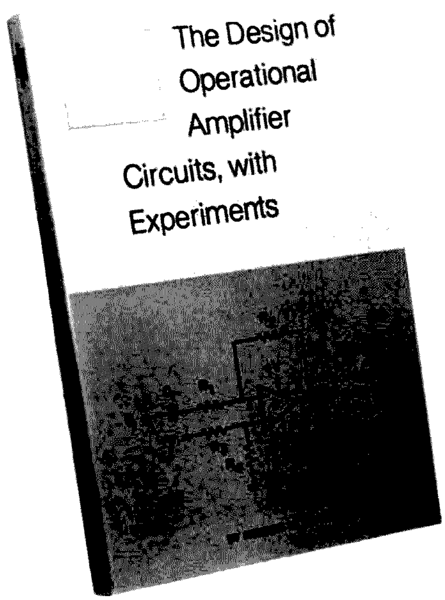

THE DESIGN OF OPERATIONAL AMPLIFIER CIRCUITS, WITH EXPERIMENTS (Howard M. Berlin, E & L Instruments, Inc., 1977, $8.50)

Versatile and inexpensive, the operational amplifier (op amp) is among today's most widely-used electronic devices. *The Design of Operational Amplifier Circuits, with Experiments* presents an opportunity to learn the how and why of op amp circuit design. The book will be of interest to those who want to learn op amp concepts. Readers looking for practical circuits for use in solving specific problems will have better luck elsewhere.

The key elements of the book are the experiments offered at the conclusion of each of the ten chapters. In all, there are 37 experiments. Many of them require an oscilloscope (dual trace preferred), a multimeter (digital-type preferred), and a function generator capable of producing sine, square, and triangle waves. In addition, a breadboard and a dual voltage power supply are necessary, along with an assortment of capacitors, resistors, potentiometers, and other miscellaneous components. Most of the experiments use the 741 op amp.

The book is logically organized, beginning with a chapter on the general characteristics of op amps, a discussion of op amp data sheets, and rules for all subsequent experiments. Chapters 2 through 7 deal with various types of op amp circuits using the 741, including linear amplifiers, function generators, and active filters. Chapter 8 suggests schemes for operating op amps with a single supply voltage. The Norton or current-differencing op amp is discussed in Chapter 9, while Chapter 10 is devoted to instrumentation amplifiers.

This is not a book for casual reading. It is suited to the experimenter or hobbyist with the time and desire to gain a detailed knowledge of basic op amp concepts. As the author suggests, it would be useful in the laboratory section of a college course on linear integrated circuits.

Jeff DeTray WB8BTH/1
Publications Editor

propagation

by
J. H. Nelson

EASTERN UNITED STATES TO:

GMT:	00	02	04	06	08	10	12	14	16	18	20	22
ALASKA	14	14	7	7	7	7	7	7	7	7A	14	14
ARGENTINA	14	14	7A	7	7	7	14	14	21	21	21	14A
AUSTRALIA	14	14	7B	7B	7B	7	7	7	7	7B	14	14
CANAL ZONE	14	14	7A	7	7	7	14	14	14	14A	14A	14
ENGLAND	7	7	7	7	7	7	7A	14	14	14	14	14
HAWAII	14	14	7B	7	7	7	7	7B	14	14	14	14
INDIA	7	7	7B	7B	7B	7B	14B	14	14	14	7	7
JAPAN	14	14B	7B	7B	7	7	7	7	7	7	7	14
MEXICO	14	14	7	7	7	7	7	14	14	14	14	14
PHILIPPINES	14	14B	7B	7B	7B	7B	7	7	7	7B	14B	14
PUERTO RICO	14	7	7	7	7	7	7A	14	14	14	14	14
SOUTH AFRICA	14	7	7	7	7B	14	14	14	21	21	14	14
U. S. S. R.	7	7	7	7	7	7	14B	14	14	14	7A	7
WEST COAST	14	14	7	7	7	7	7	14	14	14	14	14

CENTRAL UNITED STATES TO:

GMT:	00	02	04	06	08	10	12	14	16	18	20	22
ALASKA	14	14	14	7	7	7	7	7	7	7A	14	14
ARGENTINA	14A	14	14	7	7	7	7A	14	14	14A	21	21
AUSTRALIA	14A	14	14	7B	7B	7	7	7	7	7B	14	14A
CANAL ZONE	14A	14	7A	7	7	7	14	14	14	21	21	21
ENGLAND	7	7	7	7	7	7	7	14B	14	14	14	14
HAWAII	14	14	14	7	7	7	7	7	14	14	14	14A
INDIA	14	14B	7B	7B	7B	7B	7B	7B	7	7	7	7A
JAPAN	14	14	14B	7B	7	7	7	7	7	7	14	14
MEXICO	14	7A	7	7	7	7	7	7	14	14	14	14
PHILIPPINES	14	14	14B	7B	7B	7B	7B	7	7	7B	14B	14
PUERTO RICO	14	14	7	7	7	7	7A	14	14	14	14	14A
SOUTH AFRICA	14	7B	7	7	7B	7B	14	14	14	14	14	14
U. S. S. R.	7	7	7	7	7	7	7	7A	14	14	7A	7

WESTERN UNITED STATES TO:

GMT:	00	02	04	06	08	10	12	14	16	18	20	22
ALASKA	14	14	14	7	7	7	7	7	7	7	14	14
ARGENTINA	14A	14	14	7	7	7	7	14	14	14A	21	21
AUSTRALIA	21	21A	21	14	14	7A	7	7	7	7	14	21
CANAL ZONE	14	14	7A	7	7	7	7	14	14	14	21	21
ENGLAND	7	7	7	7	7	7	7	7	7B	14	14	14
HAWAII	21	21	14	14	7A	7	7	7	14	14	14	21
INDIA	14	14	14	7B	7B	7B	7B	7B	7	7	7	7A
JAPAN	14	14	14	7	7	7	7	7	7	7	14	14
MEXICO	14	14	7A	7	7	7	7	14	14	14	14	14
PHILIPPINES	14	14	14	7B	7B	7B	7	7	7	7A	14B	14
PUERTO RICO	14	14	7	7	7	7	7	14	14	14	14	14A
SOUTH AFRICA	14	7B	7	7	7B	7B	7B	14B	14	14	14	14
U. S. S. R.	7	7	7	7	7	7	7	7	14	14	7	7
EAST COAST	14	14	7	7	7	7	7	14	14	14	14	14

A = Next higher frequency may also be useful
B = Difficult circuit this period
F = Fair
G = Good
P = Poor

april

sun	mon	tue	wed	thu	fri	sat
						1 G
2 F	3 G	4 G	5 P	6 P	7 G	8 G
9 F	10 P	11 P	12 F	13 G	14 G	15 G
16 G	17 G	18 G	19 G	20 G	21 G	22 G
23/30 F/F	24 F	25 F	26 G	27 G	28 G	29 F

May 1978 $2.00

73 Magazine for Radio Amateurs

...de W2NSD/1

EDITORIAL BY WAYNE GREEN

THE INSIDE SCOOP

There are a lot of things that I just can't print in *73*. There are many things which are going on which aren't apparent and which you might never know about. I'll be talking about some of these things during my talk at the Birmingham Hamfest this year. Try to be there. The hamfest is May 13-14th. They have over 70 booths already sold and are expecting to have over 110 exhibitors by hamfest time. It should be a whale of a show.

Yes, I'll be talking a good deal about the present state of amateur radio . . . what is really happening with the FCC . . . what we can do about it. I'll also try to bring you up to date on what ham bands we may still have after the ITU meeting next year in Geneva.

In addition to Birmingham, I'll also be talking at Atlanta again this year. The Atlanta Hamfest/Computerfest (June 3-4) is shaping up to be even bigger than last year. Just about every major manufacturer is already signed up to exhibit and some are getting ready to show some hot new items. Atlanta has a special place in my heart because the city has such ambience. Oh, Dayton is big, but Atlanta has much more entertainment and some fantastic restaurants. Dayton has nothing to compare with Aunt Fanny's . . . or Stone Mountain . . . or Underground Atlanta. Besides that, Chaz Cone puts on one hell of a hamfest.

Speaking of Dayton . . . since I didn't get put on the speaking schedule for the Hamvention, I'll be going out to Long Beach for a computer show that weekend. Sorry to miss everyone . . . perhaps next year. *73* will have a booth at the Hamvention, of course.

FCC VS AMATEURS

Despite the testimony of several individual amateurs, representatives of several amateur equipment manufacturers (Drake, Heath, DenTron), and the Amateur Radio Manufacturer's Association (ARMA), all of whom vigorously opposed the Commission plan to penalize amateurs for troubles the Commission is having with CBers and HFers, the Commission went 100% against amateur radio and ruled that amateur equipment can no longer have a 10m band built into amplifiers.

The ruling actually will go far beyond that. The details of the ruling were delayed and, as of this writing, were still not definite. But we do have some strong hints as to what the final ruling will contain.

For instance, we can expect that in the future all linear amplifiers will require a minimum of 50 Watts drive, with no input attenuation permitted. The maximum gain permitted will be 6 dB. That means that a kW amplifier will have to have a minimum of 250 Watts drive.

Linears will no longer be allowed to be carrier operated. This will not be much of a problem for ham linears, which are designed for sideband use and almost always have an external switching line.

A tougher requirement will be for linears to have zero gain in the 26-28 MHz band, but still have the maximum 6 dB gain in the 24-26 and 28-35 MHz bands. I have a feeling that no engineer ever went even close to being in on that requirement. Sure, it can be done, but the trap to do that will be expensive and easier to remove than California emission control gear. Once removed or bypassed, the trap will be ineffective and the amplifier will be perking happily away on 10m . . . or 11m.

The Commission apparently does not intend to make it illegal for an amateur to modify a linear, but it would be illegal for a manufacturer to provide instructions or to make the conversion easy. Will it be illegal for *S9* magazine to publish conversions for all popular ham amplifiers to fit them out for 11m? I doubt if the FCC could make such a restriction stick, so the chances seem good that this stupid situation is just going to get worse and worse, with the FCC piling restrictions on anyone handy in frustration.

The Commission seems definitely headed towards a dealer registration of all ham gear sold, particularly for used equipment. Just how this would be accomplished for mail-order sales is a mystery. It might well do away with all further mail-order sales of ham gear.

Obviously, the FCC is going to have to set up a whole new staff to handle the ham equipment sale and registration situation. They will have to be sure to be at every hamfest and convention, picnics, auctions, etc., to make sure that no ham gear with an 11m position on it is sold . . . that no 10m amplifier is sold to anyone but a card-carrying ham, etc. The estimates are that this field force will have to have a minimum of four people in each of the 50 states . . . plus generous travel expenses. The chief of each group will probably be making $18,500 per year, his assistant about $16,750 per year, and the two people who have to do all the work would get about $13,000 per year each. That's over $3 million just in salaries. Add to that their official cars, offices, secretarial help, forms, telephone expenses, etc., and you have a budget of around $10 million, minimum.

But what if the FCC isn't able to get that much money to staff this new branch? The answer will probably be as before—until the FCC can furnish a person to monitor sales at hamfests, there will be no sales at hamfests. No flea markets . . . no booths permitting sales of ham gear. When the FCC set up those incredibly silly rules for repeaters, this was their answer to the logjam of applications . . . no repeaters.

IT IS POLITICS

Trying to reason with the FCC is like trying to reason with any other branch of the government . . . It is senseless. Business learned this a long time ago and they discovered the system which does work: the lobby. Yes, I know, I've been trying to get a lobby going for amateur radio for 20 years. Well, look at what the lack of a lobby has done for us, starting with the "incentive licensing"

Continued on page 130

73 Magazine is published monthly by 73, Inc., Peterborough NH 03458. Subscription rates in the U.S. and Canada are $15 for one year, $26 for two years, and $36 for three years. Outside the U.S. and Canada, write for rates. Second class postage paid at Peterborough NH 03458 and at additional mailing offices. Publication No. 700420. Phone: 603-924-3873. Entire contents copyright 1978 by 73, Inc. INCLUDE OLD ADDRESS AND ZIP CODE WITH ADDRESS CHANGE NOTIFICATION. Microfilm edition—University Microfilm, Ann Arbor MI 48106.

LETTERS

LOOKING FOR A MICRO

It was good to see the article "Looking For a Micro?" in the Feb., '78, *73 Magazine*. As an owner of a KIM-1 and an Apple II (both 6502-based machines), I welcome another 6502 owner.

It's obvious, though, that Francis hasn't seen the computer timing comparisons in *Kilobaud*, the ones where the 6502-based machines run at least twice as fast as the 8080-and Z-80-based equipment.

I think he will also find the 6502 instruction set considerably more flexible once he gets into it. He is way ahead, though, when he observes that KIM-1 offers more for the money than any other single board computer.

Another point that attests to the programming power of the 6502: KIM-1 will play a credible game of chess in only 1K of memory. Reports are that the same level of play using an 8080 took 4K. I think Francis will find he has more computer than he realized. I wish him the same pleasure many other KIM-1 owners (including me) have experienced.

Chuck Carpenter W5USJ
Carrollton TX

The PET is also 6502- based.—Wayne.

Concerning the article in the February issue of *73* entitled "Looking For A Micro?—consider the KIM-1": I find the author Francis J. O'Reilly to have given some misinformation about the 6502 uP chip.

The author states "...This means the 6502 can execute up to approximately 250,000 instructions per second. This is only half as fast as the machines that use the 8080A; however, it is still fast enough for most applications."

This last sentence to me is just not so. I deal with the 6502 chip by selling the Ohio Scientific Instruments line of products. This is the chip they use most often and I would like to share with you some of their comments on the different uP chips.

In their winter, 1977, catalog, OSI states, "The Z-80 is an enhanced 8080... the 6502 is an enhanced 6800.

"To further discuss the Z-80 and 6502, we must introduce two important concepts—clock speed and instruction (or op code) execution time. Microprocessors are rated by clock speed, that is, 1 MHz, 2 MHz, etc. However, comparing clock speeds of two different processors is like comparing apples to oranges. The reason is that different processors require different numbers of clock cycles to execute an op code such as an ADD. The Z-80 generally requires two to three times as many clock cycles to execute an instruction as does the 6502. ... The result is that the 6502 is generally twice as fast as a Z-80 for a given clock speed..."

If the 6502 is twice as fast for a given clock speed as the Z-80, then there is no way on this earth that the 8080A can be faster than the 6502. The proof of the pudding is to read Tom Rugg and Phil Feldman's "Basic Timing Comparisons" in the October issue of *Kilobaud*. Four out of the top five computers run used the 6502 chip. I know that this was supposed to be a timing comparison of BASICs, but in my opinion, the BASIC run is only as fast as the chip running it.

The second objection I have is the idea of spending a goodly amount of money for either an ASR-33 or a video terminal for such a small system. Not that I have anything against the KIM, but I have found most KIM owners to be out of the experimenter's mold, using home brew interfaces and preferring to work with the more efficient and faster machine language. Most KIM owners can run some pretty complex programs using only the onboard memory.

For those wanting a more sophisticated system, one designed for use with either a video terminal or a Teletype™, I would suggest either a full blown system, such as the OSI Challenger II or III, or one of the newer mini-systems, such as the OSI Challenger IIP. The only additional hardware needed to run the Challenger IIP is an rf modulator, such as the Pixie-Verter, and a television set, either black and white or color.

I suggest that, unless you are a do-it-yourselfer who also likes to write programs in machine language, you stay away from KIM.

Steve Carroll WB4MQD
Memphis TN

Note: I suggest that any person interested in really learning about microcomputers will do far better to start out with a small system such as the KIM... and have a lot of fun to boot.—Wayne.

GENERATING CHAOS

I have been a Novice for less than two months, which is odd since my professional experience in electronics goes back nearly twenty years.

First, let me say that I love amateur radio. I am completely taken with the hobby, and I am working hard on upgrading.

Now for my complaint: I am still quite slow with CW. It takes me some time to complete a QSO. On several occasions, I have had the transmissions I am trying to copy buried under CQs, unbroken carriers, and what I will call "garbage" for want of a polite and more descriptive term. I fear the QRM has been deliberate.

Where is the highly vaunted courtesy of ham radio? Everyone must start somewhere in amateur radio. Although I probably know more theory than many long-time hams, I must struggle with the code. While I realize it is probably frustrating for some of the speed demons to listen while I, or someone like me, struggles to get through RST and QTH, I would ask for patience. Perhaps, someday, one of us "lids" will patiently help a faster operator with theory. (By the way, your code tapes are great.)

Without courtesy and patience, we won't have a hobby, but merely a group of people who expend valuable energy generating chaos. Under those conditions, I am afraid amateur radio will not fare well in the crucial years to come.

William F. Brain IV WD5HYN
Houston TX

Back in the early days, when there were but two hams on the air, the second was busy jamming the first.—Wayne.

PROTECTION

I just finished reading the article, "Build A 3½ Digit DVM," by Tim Ahrens WA5VQK, and it looks great. I would like to pass on a few things to your readers for better results from this project.

First, some kind of overload protection is a necessity on this meter, as an overload of even moderate size can kill the DVM chip, and perhaps your weekly budget at $14.25 a pop! Here's how:

Just add this circuit to the input of the DVM chip, and your meter will be safe from the majority of overloads and rf jolts. Note that the VAG input on the chip goes directly to the attenuator. This is necessary to cut noise pickup (readings jump around) and prevent voltage pickup between the chip and attenuator.

After the novelty of a DVM wears off, more accuracy will be desirable. The circuit shown is about 1 to 3% with battery power. Adding a 7805 regulated power supply will get you under 1%. But, for best results, replace the zener in Fig. 5 with a Motorola MC-1403 U or Analog Devices AD-580 precision reference. And then replace the attenuator with matched precision resistors. If you do these things, you can get to well within 0.1% accuracy. Fantastic accuracy for such a low-priced project!

I have worked with this DVM chip since it came out, and I am well acquainted with its ideosyncrasies! Also, Motorola has lots of application info on it. See AN-769 for hookup info on an autoranging digital multimeter.

Gary McClellan
La Habra CA

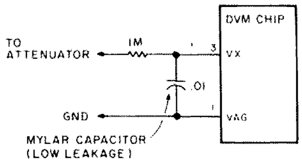

Protection circuit.

MIGHTY ATLAS

Aside from the obvious advantage of small size and convenience, Atlas Radio products are backed by what must be the most outstanding customer service department in the history of ham radio.

On two different occasions, my 210-X has been returned to Clint Call W6OFT, the company's customer service manager, for repairs, adjustments, or alignments. It has never cost me a cent.

This is especially commendable in view of the fact that the unit was technically out of warranty and in one case the return was made because some clown had put the thing on 11 meters before I purchased it. A new dial was installed, and the radio was "gone through" and returned in 30 days with a specification sheet checkout report.

Continued on page 184

Faces, Places

Jim Joyce XE1UFA and Lou Ramirez XE1VW stood atop this volcano on Revillagigedo while taking a break from last year's XF4JJ DXpedition.

H. S. H. the Crown Prince Albert of Monaco paid a visit to the shack of Alexis Demcenko 3A2GX/FØAZS/I1ALX (photo courtesy of 3A2GX, via W4WFL/3AØJE).

N. R. Gopal VU2GO was one of several hams whose expert net operation resulted in an emergency airlift of medication from Italy to a six-year-old leukemia victim in India.

Eric Shalkhauser W9CI (Washington IL), author of The History of Ham Radio, was captured on film at the national QCWA open board meeting in Chicago.

Ever worked two YLs at the same time? You might, if you hear Stephanie Miller WB2VKC (left), age 10, or her sister Suzanne WB2VKB, age 12. The two girls from Scotia NY work all bands, but prefer the excitement of the 80 meter Novice band.

Dr. Karl Brownstein W6PSI (center), his wife Joan W6PSE (left), and son Harvey WB6YNQ (right), owners of Integrated Circuits Unlimited, were recently feted at a banquet in San Diego, where they received awards both from State Senator Bob Wilson and from the San Diego Police Department.

Looking West

Bill Pasternak WA6ITF
24854-C Newhall Ave.
Newhall CA 91321

The SCRA held its election meeting on February 11, with Paul McClure WA6HGK of San Diego becoming its chairman for the 1978 calendar year. Elected along with Paul were Will Anderson AA6DD as vice chairman, Sybil Albright W6GIC as secretary, and Vic Murrall as treasurer. Paul, a relative unknown in FM political circles until about two years ago, has indicated that he intends to continue the overall unification program started two years ago under then chairman Bob Thornburg and to work toward finding ways to include more spectrum users within the structure of the organization. Important to this work is the SCRA/SANDRA/220 Club all-day seminar to be held on September 23, 1978. Titled the "First National Voluntary Coordination, Band Planning, and Technical Advances Seminar," the meeting hopes to unite coordinators and council leaders from all over the nation with other concerned spectrum users for a day of interchange leading to ongoing dialogue and perhaps some form of national voluntary band planning council for VHF and UHF. If you wish to attend or present your point of view at this meeting, I suggest that you drop a note to the SCRA, PO Box 2606, Culver City, California 90230, before June 15. There are already a number of interesting people scheduled and, if all goes well, I should have a tentative program outline for you either next month or soon thereafter. LW will be there and we hope you will be, too.

Regular readers of Looking West have noted that we say little about 450 MHz FM activity. There is a reason for this: until now, there has been little to say. For the most part, UHF FM in this area consists of many rather "super private" repeaters and remote base systems, along with a myriad of auxiliary link and control channels for just about everything in the relay world one might imagine. If I had to categorize 450 out here, the only simple description I could give it in relation to FM is that it is a "private band." Open format relay communication centers around the two meter band and, to a lesser degree, the 220 band. However, this does not mean that there are no open UHF repeaters on the ¾ meter band. However, until recently, there were no publicized listings of these systems.

In October of 1977, the Southern California Repeater Remote Base Association published a listing of what they term "public repeaters." In glancing over said list, one finds eight such entities. Of the eight, one (W6SD) I know has not been active for a good number of years, which leaves us with a total of seven open format repeaters on 450. Not many, when one considers that estimates of total numbers of operational systems *run* into figures exceeding three hundred, but at least it's a start. If you come here from another area with a 450 radio, I had better warn you that though we utilize the national standard of 5 MHz between input and output, our channels are inverted from the rest of the country's. Therefore, any receive crystals you have will be listening on an input if they happen to fall on one, and you will be transmitting on a system output. So, if you plan to try and operate 450 while visiting Southern California, be aware that it will necessitate your purchasing special crystals usable only here. For those interested, the following are the seven 450 repeaters that I believe are active, according to the SCRRBA listing:

WR6AKU—Palos Verdes: 440.5 in, 445.5 out, L.A. coverage
WR6AAA—Catalina Island: 442.0 in, 447.0 out, coastal coverage San Diego to Ventura
WR6AOX—Sulphur Mountain: 442.325 in, 447.325 out, Ventura area coverage
WR6AZN—Table Mountain: 442.325 in, 447.325 out, high desert
WR6ANP—Crestline: 443.35 in, 448.35 out, Riverside County and adjacent areas
WR6AII—Palomar Mountain: 444.425 in, 449.425 out, San Diego
WR6ACF—Mt. Otay: 444.500 in, 449.50 out, San Diego, SANDRA-sponsored

There are two notes that should be added to the above listing. Let me quote from the SCRRBA newsletter: "1—SCRRBA believes the above data to be *correct*, but is not responsible for its ultimate accuracy. 2—No impression is intended or implied that the amateur frequency bands which SCRRBA coordinates are devoid of activity except that listed above. The above listings represent in actuality only a very tiny percent of the total Southern California activities. Repeaters and remote base stations not listed above are coordinated as private machines; such machines generally do not welcome visitors."

The visitor to Southern California is far better off with a two meter or 220 MHz radio, but for those intrepid souls wishing to venture forth into the domain of Southern California UHF FM, we present the foregoing with a thanks to SCRRBA for providing the input. If any of you get around to exploring the above, please drop me a note and let me know what you find.

I had a rather interesting conversation the other evening with Chris Boone WB5ITT, who informed me about the current state of six meter FM activity in the Houston, Texas, area. The big piece of information coming from Chris was the announcement of WR5APC, a new six meter open autopatch repeater that will soon be linked with a sister machine in Beaumont, Texas, via 10 GHz microwave. At present, APC is operational in test mode on 53.12 in, 52.525 out. By the time you read this, it should be located at its permanent home atop the 1,000' channel 8 TV tower and operational on a final channel pair of 53.28 in and 52.68 out. Therefore, it's suggested that potential users equip themselves for the .28/.68 pair. Though the autopatch facilities will also be "open," i.e., available to all users, the access coding is not yet available. Chris also noted that the new repeater will also be an outlet for the Texas Intercity Relay System, a linking facility developed to help cope with keeping communication lines open in time of disaster. There are a lot of kudos to be given in this project, with special recognition going to Merle Taylor WB5EPI, trustee of WR5APC.

Los Angeles County RACES has been on standby alert for the past two days, though they have not yet been called up. Virtually every LA repeater has been called upon to handle emergency-related traffic at one time or another, though as of this date there have been no organized LA area operations started. One repeater, a private 220 autopatch with the callsign WR6AWQ, has been operational with the Salvation Army as a telephone interlink from the heavily damaged Coldwater Canyon/Mulholland Drive area, with both mobile and hand-held units at the disaster scene. Even the infamous 76ers have gotten involved in the disaster relief efforts both two weeks ago and again with the current flooding, going out to help other amateurs protect their homes and property by digging drainage runoffs, sandbagging potential flood areas, and doing the myriad of other things one does when Mother Nature unleases her wrath upon humanity. It will take weeks before we know who did what to help whom, but one thing is clear: An emergency struck and, as usual, the amateurs were there to lend a helping hand. All are to be congratulated.

In outlying areas, reports are very scarce. For the past three days, however, all normal operation on the WR6AOX Sulphur Mountain/Ventura .28/.88 repeater has been suspended and the system is geared to handling emergency and health and welfare traffic. AOX has been working with amateurs in the area from Simi Valley to north of Ventura in this effort. It's been said on the air they will continue until the emergency is over, much to the credit of a dedicated amateur organization. Again, there may be other things going on that LW knows nothing about at this time, so watch for updates in coming months. If you have input, either write LW with it or call the LW Hotline at (805)-259-8243. It's still raining—many areas of LA and vicinity are flooded, homes have slid off hillsides, mud is everywhere, and no one seems to know when the skies will close. Last year we were in the middle of a serious drought; this year, well, anyone have plans for an ark?

Ham Help

I would like to have some info on where I can write to for the purchase of parts for a Gonset G50 and HQ-110.

B. Labore K1WPT
471 Calef Road
Manchester NH 03103

I would like to get in touch with a qualified company or individual who can align a Hammerlund HQ-180 receiver. I can furnish alignment instructions as contained in the owner's manual. I would prefer someone in the Southeast if possible.

George P. Firmin WA4FSK
2435 Cajun Dr., NE
Marietta GA 30066

Editor:
Robert Baker WB2GFE
15 Windsor Dr.
Atco NJ 08004

CONTESTS

SOWP ANNIVERSARY CW QSO PARTY
Full GMT period of
May 4 and 5

The Society of Wireless Pioneers will celebrate its 10th birthday with this on-the-air CW QSO party. The call will be CQ SOWP on all bands, 55 kHz up from the low end. Novice members should use the center portion of each Novice band. For the benefit of those who cannot participate for the full time, it is suggested that part-time participants make their CQ calls on the even hours. Exchange information should include the following as a minimum—handle, SOWP membership number, and QTH. Additional information is optional. A special certificate has been designed and will be awarded to all members who make a minimum of 10 contacts with fellow members on CW. To qualify for the certificate, members should send a list of contacts showing date, time, call, and SOWP numbers to the Society's Vice President for awards, Pete Fernandez W4SM, 129 Hialeah Road, Greenville SC 29607. In addition, a self-addressed, stamped envelope must accompany all requests for the certificate.

GEORGIA QSO PARTY
Starts: 2000 GMT
Saturday, May 6
Ends: 0200 GMT
Monday, May 8

Sponsored by the Columbus ARC, there are no time or power restrictions, and contacts may be made once on phone and once on CW on each band. Oscar counts as one band. GA mobile or portable stations count as a separate station in each county.

EXCHANGE:

QSO number, RS(T), and QTH—county for GA; state, province, or country for others. GA to GA contacts are permitted.

SCORING:

Each completed contact counts 2 points. GA stations multiply QSO points by number of different states and VE provinces worked. DX stations may be worked for QSO points, but do not count as multipliers. Others multiply QSO points by number of GA counties (159 max.). No repeater QSOs permitted, except via Oscar!

FREQUENCIES:

CW—1805, 3590, 7060, 14060, 21060, 28050; SSB—3900, 3975, 7245, 14290, 21360, 28600; Novices—3718, 7125, 21110, 28110. Try 160m at 0300 GMT, 10m on the hour, and 15m on the half hour during daylight hours.

AWARDS:

Certificates to highest scoring station in each state, province, country, and GA county. Other certificates as warranted. Plaques to highest scorers outside GA and GA mobile/portables.

ENTRIES:

Logs should show: date/time in GMT, call, exchange sent/rcvd, band, emission type, and multipliers claimed. Checklists appreciated. Include a signed declaration (usual) and mail your entry to Columbus ARC, c/o Jeanne J. Hunting K4RHU, 2701 Peabody Ave., Columbus GA 31904. Entries should be postmarked no later than June 5. Include a large SASE with 24 cents postage for results. Note: Novices should designate their logs as such!

MASSACHUSETTS QSO PARTY
Starts: 1200 GMT Saturday,
May 13
Ends: 2200 GMT Sunday,
May 14

This contest is sponsored by W1FJI, N1AS, and K1KJT. A station may be worked once per band; phone and CW considered separate bands, but no cross-band or repeater QSOs permitted. MASS stations may work each other, but out-of-state stations must work only MASS stations. Special class for Novices and Techs who operate CW within Novice bands only. Novices sign CALL/N; Techs sign CALL/T. In this class, Novices and Techs will compete against each other. Submit separate logs and summary sheets for this class.

SCORING:

Count 2 points per completed QSO. Out-of-state stations multiply total QSO points by total MASS counties worked (14 max.). MASS stations multiply total QSO points by total MASS counties worked plus ARRL sections for total score. Note: DX counts for QSO points only with no multipliers.

FREQUENCIES:

CW—1810, 3560, 7060, 14060, 21060, 28060.

Phone—1820, 3960, 7260, 14290, 21390, 28590, 50.110, 146.52.

Novice/Techs—3720, 7120, 21120, 28120.

EXCHANGE:

MASS stations send RS(T) and county, others send RS(T) and ARRL section.

ENTRIES/AWARDS:

Appropriate awards given to top scorers, including top Novices and Techs on Novice CW bands only. Submit logs and summary sheets along with large SASE for awards and results to: A. Marshall W1FJI, 60 Meadow Road, Westport MA 02790. Mailing deadline is June 30.

MICHIGAN QSO PARTY
Operating periods:
1800 GMT Saturday, May 20
to
0300 GMT Sunday, May 21
1100 GMT Sunday, May 21
to
0200 GMT Monday, May 22

The contest is again sponsored by the Oak Park ARC. Phone and CW are combined into one contest and MI stations can work other MI stations for multipliers. A station may be contacted once on each band/mode. Portables/mobiles may be contacted as new contacts each time their county changes. No repeater QSOs allowed.

EXCHANGE:

RS(T), QSO number, QTH—county for MI; state or country for others.

SCORING:

Phone QSOs count 1 point per QSO, CW = 2 points, OSCAR = 5 points. Multipliers are only counted once. MI stations: QSO points times (states + countries + MI counties). KL7 and KH6 count as states. VE counts as a country. Max. multiplier = 80. Non-MI: QSO points times MI counties. Max. multiplier = 83. Score 5 points each club station QSO with W8MB. VHF-only entries: same as above except multipliers per VHF band are added together for total multiplier.

FREQUENCIES:

Phone—1815, 3905, 7280, 14280, 21380, 28580.

CW—1810, 3540, 3725, 7035, 7125, 14035, 21035, 21125, 28035, 28125.

VHF—50.125 and 145.025.

AWARDS/ENTRIES:

Continued on page 186

CALENDAR

May 4-5	**SOWP Anniversary CW QSO Party**
May 6-8	**Georgia QSO Party**
May 13-14	**MASS QSO Party**
May 20-22	**Kansas QSO Party**
	MICH QSO Party
June 3-4	**IARS/CHC/FHC/HTH QSO Party**
	VE-10 Contest
	MINN QSO Party
June 10-11	**ARRL VHF QSO Party**
June 17-18	**WVA QSO Party**
June 24-25	**ARRL Field Day**
	First REF Ten Day
July 1-2	**Seven Land QSO Party**
July 4	**ARRL Straight Key Night**
July 8-9	**IARU Radiosport Competition**
July 15-16	**10-10 Net Summer QSO Party**
	VHF Space Net Contest
July 22-24	**Rhode Island QSO Party**
July 29-31	**CW County Hunters Contest**
Aug 19-20	**New Jersey QSO Party**
Sept 9-10	**ARRL VHF QSO Party**
Sept 16-17	**Scandinavian Activity Contest—CW**
Sept 23-24	**Scandinavian Activity Contest—Phone**
	Delta QSO Party
Oct 14-15	**ARRL CD Party—CW**
Oct 21-22	**ARRL CD Party—Phone**
Nov 4-5	**ARRL Sweepstakes—CW**
Nov 11	**OK DX Contest**
Nov 18-19	**ARRL Sweepstakes—Phone**
	Second REF Ten Day
Dec 2-3	**ARRL 160 Meter Contest**
Dec 9-10	**ARRL 10 Meter Contest**

FCC Math

John F. Leahy WB6CKN
P.O. Box 539
Gonzales CA 93926

Yep, we're there, our final installment! And if you've managed to stay with us all this way, you are now well on your way to mastery of the math skills required for even the most difficult FCC exam. Now it's only a matter of practice, using number equations and the various other tricks of the game, until you have such confidence that even the most skilled FCC operative will be unable to rattle you come exam time.

In this installment, we'll cover one final, rather exotic but nevertheless necessary, topic called logarithms. Then we'll see a bit more algebra. And that'll be it! We're finished. You take it from there. And my guess is you'll have little trouble with math from here on out.

Logarithms, usually shortened to logs, simply, are nothing more nor less than exponents of ten in our case. There's another system of logs based on a really exotic number, something like π, with the symbol e, that has a value about 2.72, but goes on forever like π. The idea is the same. Logs are simply exponents. Thus the log of 1000 is 3. In symbols, $\log_{10} 1000 = 3$. You often see the subscript 10 omitted, and we'll do so from now on since in our discussion it'll only be logs of ten that we'll deal with.

Likewise, $\log 10 = 1$, $\log 100{,}000 = 5$, and $\log 1 = 0$, since, remember, 1 is 10^0.

Before we go any further, a word about the place of logs in electronics. It just so happens that some of the laws of nature (for example, human hearing) follow logarithmic curves (graphically speaking) rather than straight lines, circles, or what have you. What this means is that logarithms turn out to be a factor (multiplier) in many formulas, etc. The power ratio formula for decibels comes immediately to mind: $dB = 10 \log (P_1/P_2)$. And there are the characteristic impedance formulas, etc. Page through the license manual or whatever and you'll find all sorts of such formulas. So logs *are* important.

So far, the only logs we've seen were powers of ten. But the formulas require us to find logs of all kinds of numbers, numbers like 372 or 0.000259 or 86,000,000. How the heck do we find logarithms for numbers like that?

Well, back to square roots a minute or two. Say we want to find the square root of 8405. Remember the technique we used. Change the number to an even power of ten so we can divide by 2. 8.405×10^3 becomes 84.05×10^2 and that is about 9.2×10^1 or 92. But supposing we left our number in the form 8.405×10^3, took ½ of the exponent 3, and found the square root of 8.405. That's finding the square root alright, but look how strange it appears. $3 \div 2$ is 1.5. Square root of 8.4 is perhaps 2.9. So the square root of 8405 is about 92 or else $2.9 \times 10^{1.5}$. That means that 92 and $2.9 \times 10^{1.5}$ are about the same number, if the rules and laws of math are consistent. Let's say they're exactly equal. Then we have the equation $92 = 2.9 \times 10^{1.5}$. Bring the 2.9 down to the bottom of the other side and we get: $92/2.9 = 10^{1.5}$. Divide the left side to get: $31.7 = 10^{1.5}$. Ye gads, decimal exponents! Yep, that's the name of the game. It turns out that any number can be expressed as a power of ten alone if you're willing to use decimal exponents. And nature seems to have been put together actually using those decimal exponents! The exponent is a logarithm. Thus $\log 31.7 = 1.5$ from our work above. Mathematicians have worked out huge tables of logarithms, going through a process something like that above. Of course, slide rules and now calculators give the logarithm of any number very quickly and easily. All you need remember, for calculation purposes, is that logarithms are exponents of ten. With that in mind, you can instantly give the first part (called the characteristic, the part to the left of the decimal point) of the log of any number. Log 372, then is 2. (two point) and then something after the point; log 86,000,000 is 7. (seven point) and then something after the point, etc.

Actually, if you just get the part to the left of the decimal point, you have enough for many computations. For example, using the power formula mentioned earlier in the case of an amplifier that brings a signal up from 10 to 100 Watts, we have: $dB = 10 \log (100/10) \cdot (100/10) = 10$. Log 10 is 1 (10 is 10^1, and that 1 is the log). And 10×1 is simply 10. So we have a 10 dB gain for a ten-fold increase in power. But careful here! From those results you might guess that a three-fold increase in power is going to give a 3 dB gain. But log 3 is about 0.5; multiply that by 10, and we get 5 dB. Actually, *doubling* power is a 3 dB gain, since $\log 2 = 0.3$.

It's often good to know the first digit that comes after the decimal point when working with logs. So here's a little table that some people keep in mind:

number	1	2	3	4	5	6	7	8	9	10
log	0.1	0.3	0.5	0.6	0.7	0.8	0.85	0.9	0.95	1

Notice how logs are far apart for the lower numbers, then start bunching up after 6. With the aid of that table, we can do sufficiently accurate computations for FCC exams.

A few more examples, then an exercise: What's log 27? 27 is 2.7×10^1. From the 10^1 we get 1. From the 2.7 (which is close to 3) we get 0.5. Put them together for 1.5 (not precise, but close enough!). Log 8,915 is about 3.95. Log 64,000,000 is 7.8.

You'll notice we didn't go into numbers smaller than 1. We could do so easily enough, but it's not necessary, so we'll skip it. Any algebra book will cover that if you want to see how to handle negative exponents with logs.

Exercise 1: (Work and answers at end)
(1) Find the log of: (a) 59 (b) 3 (c) 11,100 (d) 679,000,000
(2) Find the dB gain (or loss) in each case: (a) input 5 W, output 40 W (b) input 0.03 W, output 2 W

A word of warning. Don't attempt to find square roots using odd exponents of ten. We only did that to develop the idea of logarithms. The simple and obvious way to do square roots if you don't have a calculator that does it for you is with even powers of ten as we saw in our last installment.

Now a bit more algebra and we'll be finished—a general technique for separating letters and numbers, thereby isolating (solving for) a particular letter (which stands for a certain physical dimension or whatever).

We've already seen about doing the same thing to things that are equal, and how that produces things that are still equal. Combine that reasoning with a tendency to be opposite or do the opposite, and you've got another powerful tool at your disposal.

We've seen this already, but never had it spelled out. Take an example. $I = E/R$. To solve that for R using principles we've already seen, we would bring the R up to the left and the I (which *is* up to the left) down to the right, getting $R = E/I$. Notice that in the original, R is dividing E. The opposite of dividing is multiplying. Multiply both sides of that $I = E/R$ by R and you get $IR = E$. Notice that now I is multiplying R. The opposite of multiplying is dividing, so divide both sides by I and you get $R = E/I$. We've done the same thing to both sides of the equation in each case, and we did the opposite of the operation that was indicated. Doing this enabled us to get the different forms of Ohm's Law, but using a logical method that works always for even the most difficult formulas.

To sum up all that we've learned about transforming formulas from one form into another, here are the approaches we can use. (1) We can make up a number equation (it has to be a true equality, of course) in the same form as the formula under consideration. (2) We can do the same thing to both sides of a formula (add to, subtract from, multiply by, divide into, take the square root, square, etc.) and still have a correct formula. (3) Frequently, the thing you want to do to both sides is the opposite of the indicated operation (if there's a multiplication, you want to divide; if there's an addition, you want to subtract, etc.).

And one final bit about handling addition and subtraction: If the addition or subtraction is *in the bottom* or if something is multiplying or dividing the things that are being added or subtracted, it is usually necessary to first *carry out* the multiplication or division, or else the things added or subtracted *have to be handled together as a unit.* That may seem rather confusing. But we've already seen it in operation and we'll see it once again in this final problem below.

$Z = RX/\sqrt{R^2 + X^2}$ is the formula for impedance at a given frequency with a resistance and reactance in parallel. Supposing we know the impedance and resistance but want to find what the reactance is. In other words, we want to solve for X. Here's how we go about it. First, multiply both sides by $\sqrt{R^2 + X^2}$ as a unit. This'll cancel them out on the right, and we now have: $Z\sqrt{R^2 + X^2} = RX$. Next we want to do an opposite, the opposite of an indicated operation, namely finding the square root. The opposite of finding square root is squaring, so let's now square both sides. Since these are multiplications and additions, we can square the things multiplied separately, but the addition part is handled as a unit. And we are squaring both sides, so we still have a true equation: $Z^2(R^2 + X^2) = R^2X^2$. Note that squaring a number that has a square root sign around it just gets rid of the square root sign:

Continued on page 130

New Products

NEW ALL-CIRCUIT EVALUATORS FROM A P

A P Products announces the introduction of their all new Powerace all-circuit evaluators.

All Powerace models feature industry-accepted Super-Strip SS-2s and will accept all DIP sizes, plus TO-5s and discretes with leads to .032" diameter.

The Powerace line includes three power breadboards, models 101, 102, and 103. All three models offer 256 5-tie-point terminals and 16 25-tie-point buses, fused power supply, and ground plane.

New Powerace 101 has a variable 5-15 V dc, 600 mA power supply with line and load regulation <3% @ 120 V ac ± 8%. Ripple and noise are ≤10 mV @ full load. In addition, Powerace 101 features a 0-15 V dc meter (5% full scale accuracy) and a voltage adjust knob. Suggested retail price for Powerace 101 is $84.95.

Powerace 102 has a fixed 5 V dc, 1 Amp power supply with line and load regulation <1% @ 120 V ac ± 8%. Ripple and noise are ≤10 mV @ full load. Powerace 102 has four slide switches with logic 0 or logic 1 output, and two momentary slide switches each with a debounce circuit to give positive or negative pulse output. In addition, Powerace 102 has 4 LEDs (one with positive or negative pulse memory), one debounced push-button with 8 msec positive or negative pulse output, and one clock generator (1, 10, 100, 1k, 10k, and 100k Hz). Suggested retail price for Powerace 102 is $114.95.

A P's new Powerace 103 features fixed 5 V dc, 750 mA power supply, fixed + 15 V dc, 250 mA power supply, and -15 V dc, 250 mA power supply, with tracking. Line and load regulation are <1% at 120 V ac ± 8%. Ripple and noise are ≤10 mV @ full load. Powerace 103 has a 15-0-15 V dc meter (5% full scale accuracy), two LEDs, two slide switches with logic 0 or logic 1 output, and two momentary slide switches each with debounce circuit to give positive or negative pulse output. Suggested retail price for the Powerace 103 is $124.95.

For further information, contact Ken Braund, Product Marketing Manager, *A P Products, 72 Corwin Drive, Box 110, Painesville OH 44077.*

NEW DENTRON MT-2000A ANTENNA TUNER

Today's low-band amateur setups fit into two basic categories—the high-power stations and the low-power, 100-200 Watt stations. In an effort to give full-power operators a choice on the matter of which tuner suits their needs, DenTron announces a new version of the MT-3000A Ultimate Tuner, the MT-2000A. Both tuners are identical in power handling capabilities (3 kW PEP) and styling (the same all-metal low profile construction), but the MT-2000A is built without the dual wattmeters, built-in dummy load, and antenna selection switch found in the MT-3000A. Instead, the MT-2000A offers two unique features of its own—a front panel lightning protection switch and a front panel bypass switch for taking the tuner completely out of your antenna system. The best feature of the MT-2000A is probably its price—only $199.50 suggested retail. The MT-2000A is a 3 kW tuner for a 1 kW price, and it includes all the features that have made DenTron tuners famous—styling, power handling capabilities, all-American components, and a pride in workmanship that makes the MT-2000A a great addition to any ham shack. The MT-2000A (continuous tuning from 1.8-30 MHz) matches virtually any feedline, coax, balanced, or random wire, and has built-in heavy-duty 4:1 balun, harmonic attenuation, ceramic rotary switch with 18 positions and 12-Amp capacity, 6000-volt capacitor spacing, and low profile styling, 5" x 14" x 15". *DenTron Radio Co., Inc., 2100 Enterprise Parkway, Twinsburg OH 44087.*

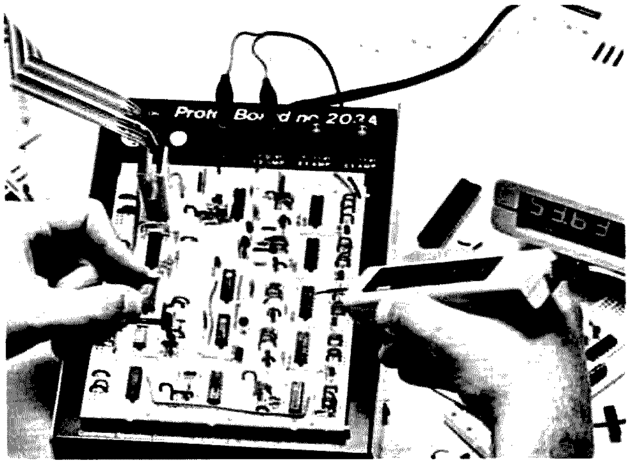

CSC Proto-Board 203A.

THE PROTO-BOARD(R)

Breadboarding 1978 style has sure changed from the old tube days of experimenting. What old-timer would have even imagined that we would have breadboard units, complete with built-in power supplies! The new Continental Specialties 203A board has all of the voltages you'll need for building digital circuits . . . plus 5 V and ± 15 V. ICs and parts can then be plugged right into the board to make up any circuit you find in a magazine article or cook up yourself. It's a lot easier to put a new circuit together this way than to solder it to perfboard. This way, if you want to change any part value or try out some extra bypassing, you just plug in the part.

Some of the breadboards we've tried are built with el cheapo materials, and, after a few parts have been plugged into the holes, the springs are so loose you can't depend on the contact. Continental goes to a lot of trouble and expense to make sure that their holes will last. If you think this is just a bunch of bull, go ahead and find out for yourself . . . the hard way.

The CSC Proto-Board 203A is built on a very sturdy box so it won't go drifting around your workbench when you are aiming logic tracers at it. It's a quality product . . . and the price reflects this at $129.95. For this price, you get the breadboard and three power supplies. That's right, CSC does not use one supply with three taps; both of the 15 V supplies are adjustable, and all three are voltage regulated.

This breadboard is designed to facilitate test setups of TTL, CMOS, op amps, video amps, comparators, PLL, etc. What are you waiting for?

Continental Specialties Corporation, 70 Fulton Terrace, New Haven CT 06509.

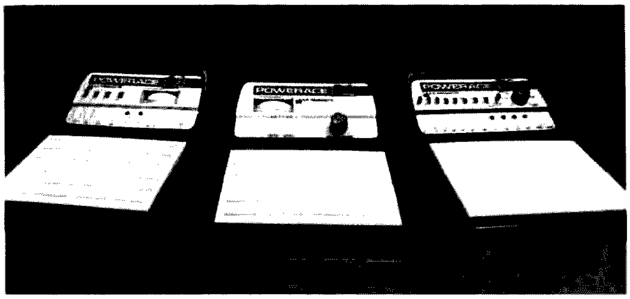

A P's new Powerace models.

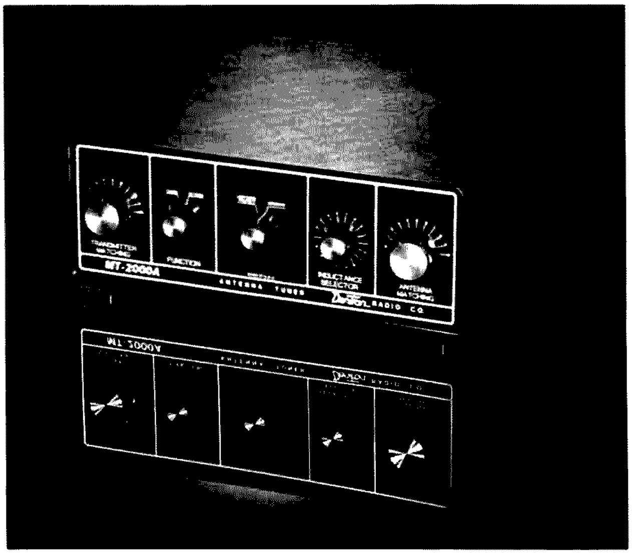

MT-2000A antenna tuner from DenTron.

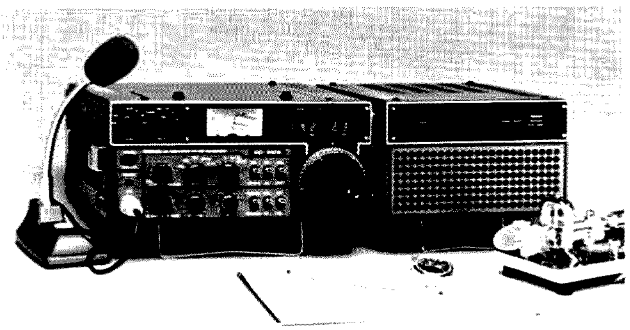

Icom's IC-701 digital transceiver.

ICOM'S IC-701 DIGITAL TRANSCEIVER

The long-awaited entry of Icom (Inoue Communication Equipment Corporation) into the HF transceiver market happened in March, 1978, with the introduction of the IC-701 synthesized, 160 meter through 10 meter, digital transceiver. Packed into a small case of the same cross section as the extremely popular IC-211 and only a few centimeters longer, are all of the features expected in an HF transceiver, plus many more. Features such as continuous electronically variable filter width in SSB and RTTY and built-in standard and narrow filter widths for CW mean that virtually all usual extra cost accessories are standard with the IC-701. Some of the more outstanding no-extra-cost features are: digital readout, two VFOs, all solid state, continuous duty on SSTV, RTTY, and the famous light chopper VFO dial. Priced at $1,499.00 including the transceiver, ac supply speaker, and SM-2 microphone, the IC-701 is considered to be simply the best amateur transceiver for the serious operator.

For a list of dealers where the IC-701 may be seen, contact *Icom East, Inc., 3331 Towerwood drive, Suite #307, Dallas TX 75234* or *Icom West, Inc., 13256 Northrup Way, Suite #3, Bellevue WA 98005.* In Canada, contact *Icom Canada, 7087 Victoria Drive, Vancouver, BC V5P 3Y9.*

ASTROLITE TYPE 436B HEADSET

Can a headset spoil you? You bet! *If* it is the Astrolite type 436B combination earphone/microphone headset. After using the headset for several weeks, switching back to conventional loudspeaker/desk mike operation *felt* awkward and inconvenient and it *was* awkward and inconvenient.

It did take a few evenings to begin to fully appreciate the advantages of the comfortable, lightweight unit. The large, soft, and easy-on-the-ears cushions on the earphones make it possible to wear the headset for hours at a time without fatigue or discomfort. The cushions also provide a useful 5 dB of attenuation of background sounds, making it easy to concentrate on the desired signal without undue distraction.

The dynamic microphone is easily positioned for optimum pickup and does an excellent job with most currently available amateur equipment, particularly the Yaesu and Trio-Kenwood rigs it was tried with during the test period.

After a few minutes use, I realized that the Astrolite headset was so comfortable and easy to use that I was no more conscious of its presence than I was of my wristwatch or my contact lenses. And, best of all, I was no longer stuck in front of the old desk mike. I could turn, move about the operating position, or get up and find a book or magazine on the other side of the shack and return to my chair without interruption.

The joy of hands-free operation and the freedom to move about while making a contact have to be experienced to be fully appreciated, and once they are, you'll find it hard to ever consider returning to the old method of operating.

What about CW? The Astrolite type 436B headset does a fine job on CW as well as SSB, FM, and AM, and if you prefer not to have the mike in place while using the key, just swing it back out of the way.

The phones are independently wired or can be wired monaurally, according to your particular requirements, making them especially convenient if, for example, you use a second receiver for split frequency operation, monitoring a 2 meter link.

If you would like to add a new dimension to your operating, try the Astrolite type 436B headset. Once you do, you'll be surprised that you could ever be happy operating without it.

In addition to the type 436B, Astrolite offers several other versions, including a single-phone model and one with a noise-cancelling mike as well as single- and double-earphone units without mike.

For complete information on all Astrolite models, contact *Television Equipment Associates, Inc., Box 260, Boway Road, South Salem NY 10590.*

Morgan W. Godwin W4WFL
Peterborough NH

DM-1 DESIGN MATE™ ADDS POWER, METERING TO SOLDERING BREADBOARDS

Continental Specialties Corporation has demonstrated a very definite understanding of the needs of the electronic designer in their Design Mate 1.

This self-contained unit adds the versatility of a 5-to-15 volt variable regulated power supply and a 0-to-15 V dc voltmeter to a very capable configuration of solderless breadboard terminal and bus strips.

The output of the DM-1 variable regulated power supply is 5-to-15 V dc at up to 600 milliamps for up to 9 Watts of circuit drive. The 0-to-15 volt dc meter boasts 5% accuracy and, like the power supply, is brought out to its own binding posts on the face of the Design Mate case. This permits it to be used to set up the power supply voltage, then reconnected to measure voltage parameters within the circuit being designed.

The load and line regulation is better than 1%, the ripple and noise less than 20 mV at

Continued on page 51

Astrolite type 436B headset.

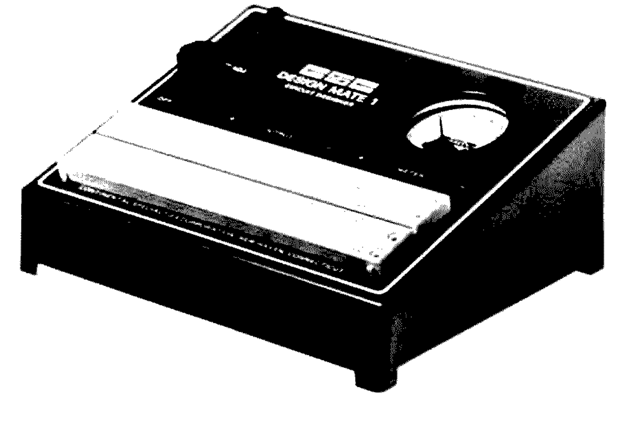

CSC Design Mate 1 circuit designer.

Richard Stiebel W6APZ
840 Talisman Drive
Palo Alto CA 94303

A Keyer? Who Needs Another Keyer?

—would you believe a $2 keyer?

With a total parts cost of less than two dollars and two evenings worth of spare time, I built the squeeze key shown in Photo A. For those unfamiliar with this area of CW, as I was until recently, a squeeze key can be used, like any other paddle, with most keyers, but it has the advantage that many letters and punctuation marks can be formed with less effort by gently squeezing the paddles together. The work in sending CW with a squeeze key is performed by the thumb and first finger. Compare that minor motion to the recommended way of sending CW with a straight key or with the hand movement required when using a bug. Good CW is not only easier to send with this squeeze key, but it can be fun. If I, who have operated only on phone for the past twenty years, feel CW can be fun with a squeeze key, there is a good chance that you, too, will enjoy it.

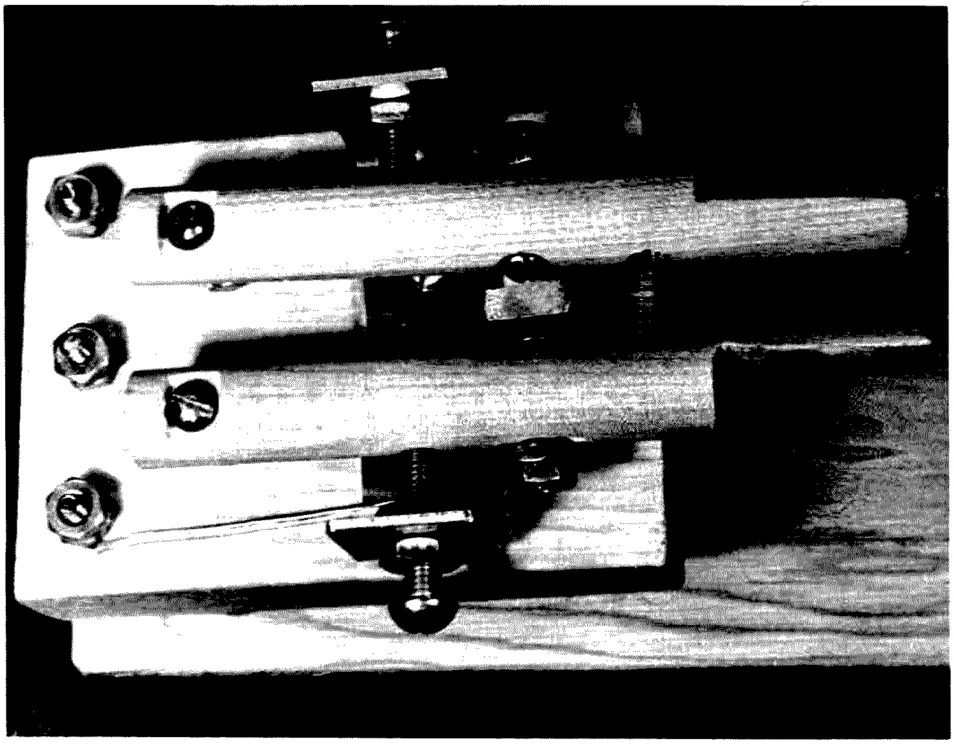

Photo A. Two-dollar squeeze key.

My desire to obtain my Extra class license motivated me to begin studying CW again, and I'd never really liked CW. The idea that sending CW might be easier with a keyer was sufficient motivation for me to build the Accu-Keyer.* The keyer worked well when I touched the dot or dash wire to ground, but I found that a clumsy way to send code. Not being interested in CW as an operating mode, I did not want to invest $20 to $40 in a paddle. Yet I needed something to make my keyer work, so I could get my Extra class ticket. This article describes how easily and inexpensively I solved the problem. Drawings and photos are included so you can duplicate this squeeze key. Instructions are provided on how to adjust the travel and tension of the key. The last section contains many possible modifications that you can make to this basic squeeze key to tailor it to your station and your desires.

Criteria

The photographs of the finished key give a good indication of how I applied my basic criteria for building this key:

1. Simple approach;
2. Readily available materials;
3. Inexpensive.

When I realized that a good squeeze key requires very little movement of the paddles when properly adjusted, it followed that there would be little wear on the moving parts. To me this meant that machined pivots or bearings were not needed. Wood, screws, and bolts should work fine. What could be simpler?

Materials

The materials consist of common 6-32, 10-32, and

*"The WB4VVF Accu-Keyer," *QST*, August, 1973, p. 19.

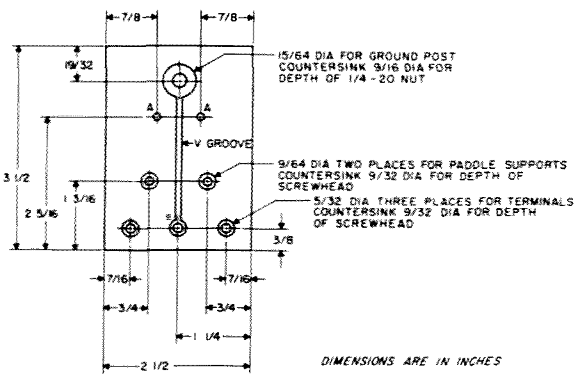

Fig. 1. Base, bottom view.

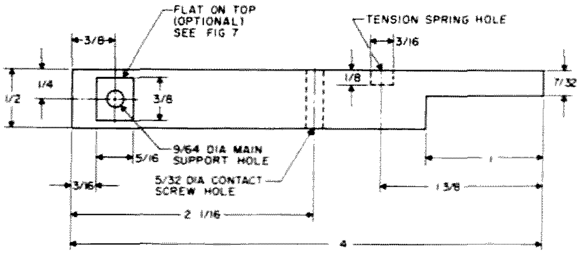

Fig. 2. Paddle detail (make two).

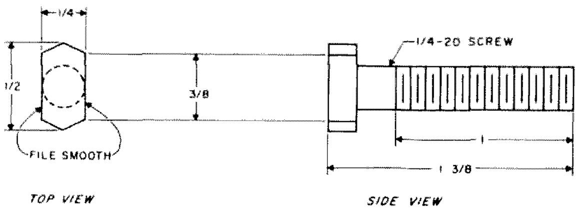

Fig. 3. ¼-20 hex-head screw modification for ground post.

¼-20 hardware. For a base, I used a 2½" by 3½" by 3/4" block of softwood. Hardwood might be more durable, but almost anything you can find in the scrap box at your local lumber yard will do. The required piece could even be cut from the end of a discarded orange crate.

The paddles were built from ½" diameter hardwood dowel rod, which I bought at my local hardware store for 39¢ for a three-foot length. As only eight inches are needed, you can save some money by sharing the dowel with other hams who are interested in building this project.

My original plan for the paddle travel adjust brackets was to use small wood blocks for these also. They were to be screwed down to the base with a horizontal hole drilled through for the 10-32 adjust screws. As I reached that phase of the project, a few 1/16" thick aluminum scraps left from a panel cutout caught my eye. For me, these were simpler to use than the wood, so the aluminum scraps were used.

The tension adjust spring came from a discarded ball-point pen. It is the spring that makes the point retract when you push on the top of the pen. Unscrew the pen in the center and remove the empty cartridge. Usually the spring will come out, adhering to the cartridge near the point end. I routinely remove this spring and put it in my miscellaneous hardware box before throwing away a used pen.

Parts Construction

Once I had assembled the material, I began making the parts for the squeeze key.

Base

I began by drilling the two 9/64" holes in the base for the two paddle supports. These should be just smaller than the screw diameter, so the 6-32 hardware will fit snugly. This helps keep the paddles firmly in position. Then I drilled the three 5/32" holes for the dot, dash, and ground terminals. I strongly recommend using a vise to hold the wood block prior to drilling the 15/64" hole. Use a piece of cardboard on each side of the base to prevent the vise jaw from marking the wood. Clamping the wood will prevent nicked fingers if the drill bit snags on the wood and the wood base spins out of your hands. It takes a few minutes more to secure the block before drilling, but my experience (and sore fingers) attest to the wisdom of using a vise or clamp for drilling large holes in small pieces of material.

On the top side of the base, I drilled two 5/64" holes at location A, ¼ inch into the block, to make starter holes for the wood screws that hold the travel adjust brackets. To permit the key to sit flat on my

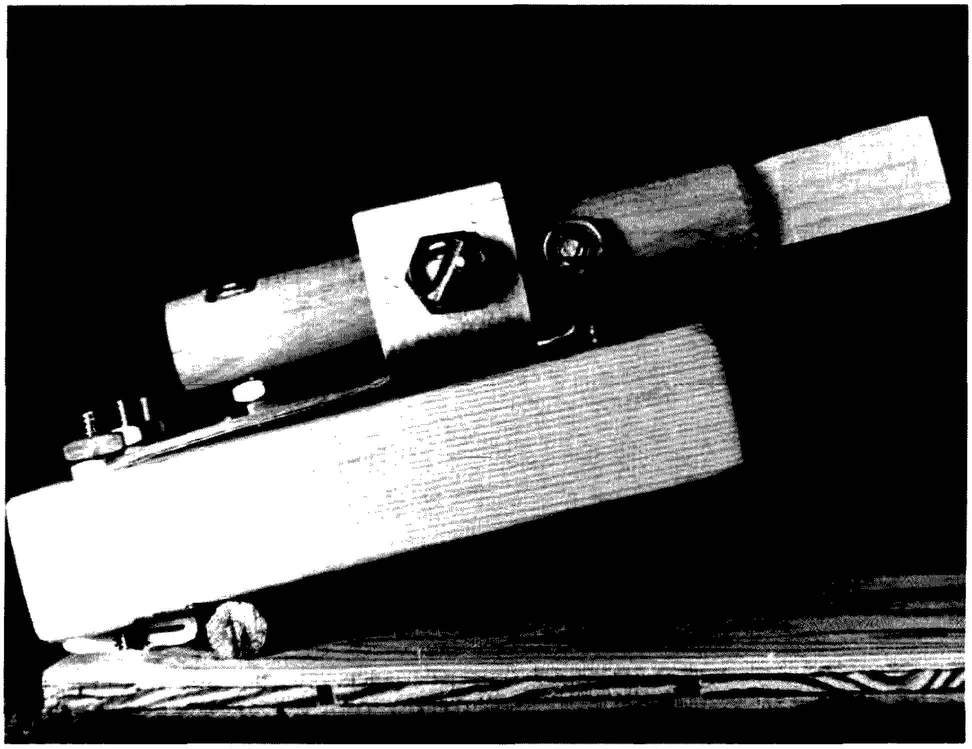

Photo B. Left side view of squeeze key.

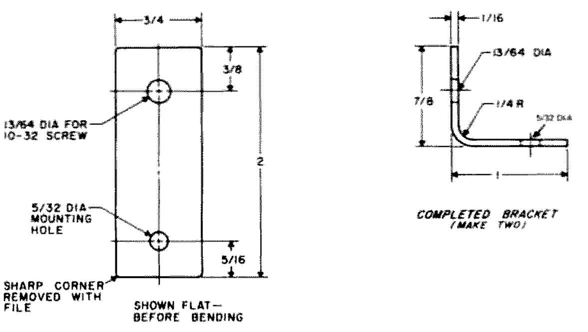

Fig. 4. Paddle travel adjust bracket (material is ¼" aluminum).

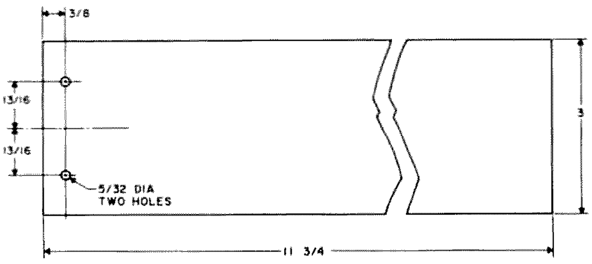

Fig. 5. Armrest.

operating desk, I countersunk holes for the ¼-20 nut and 6-32 screw heads. See Fig. 1 for the detail of the base bottom. For the same reason, I made a groove down the bottom center of the base for the ground wire.

Paddles

The paddles were the next part I made. I cut a four-inch length of dowel for each paddle. Gently clamping the dowel in a vise (again using cardboard to protect the dowel), I drilled the 9/64" main support hole. By rotating the dowel 90°, I was able to drill the 5/32" hole for the contact screw and the 3/16" diameter by 1/8" deep hole for the tension spring. Note that the diameter of the hole for the spring might have to be adjusted, depending on the exact dimensions of the spring you use. Using a coping saw, I cut away approximately 2/3 of the dowel for a 1" length, as shown in Fig. 2, to form the paddle handle. The two paddles are identical, but, when making the right paddle, put the optional flat on the bottom so when the paddles are assembled (Photo A), both flats will be on top.

Ground Post

The ground post is made from a ¼-20 hex-head screw. I used a hacksaw to cut the head as shown in Fig. 3 and filed both sides smooth. To hold the screw during cutting, I ran two nuts part way up on the screw and snugged them up to prevent the screw from turning. Then I clamped the jaws of the vise around the nuts while I sawed and filed the top.

Paddle Travel Adjust Brackets

The paddle travel adjust brackets require only two holes: one hole for mounting and one hole that just passes the 10-32 adjustment screw. These holes are easier to drill while the aluminum is flat. I bent the aluminum in a vise by tapping gently with a hammer until the desired 90° angle resulted. As you can see from a close look at the photographs, a sharp 90° bend is not required. (See Fig. 4.) It is desirable that the 10-32 screws hit the center of each paddle, but even 1/16" off center is not critical.

Armrest

Not wanting to commit myself to screwing down the paddle to my operating desk, I opted to make an armrest to keep the base in place while sending. I used a piece of ¼" plywood for the armrest, but a side slat from an orange crate sanded smooth would work well. Scrounge one from your friendly supermarket. Adjust the length to fit your arm. About two and one-half inches longer than the distance from the tip of your center finger to your elbow would be ideal. I used a shorter board, as the wrist is virtually motionless, but I believe that a board extending to the elbow would add greater stability. A three-inch width for the armrest worked well for me, but, if your arms are large, a four-inch width might be more comfortable. Fig. 5 shows my armrest.

Key Height Adjust Block

To adjust the height of the paddle handles above the desk, I used a 2½" length of an ordinary hexagonal wood pencil. This was easily cut off with a coping saw and still left about 4½" of pencil, which I used for copying code. Several pieces of cardboard were used between the base and armrest for additional support. See the side view photograph (Photo B).

Assembly of the Squeeze Key

With all the parts made, the first thing I assembled was the ¼-20 screw ground post. This was threaded into the hole, which I'd intentionally made just smaller than the screw, so it would bite the wood. Strip the ends of a four-inch length of #20 stranded wire, and wrap it around the bottom of the screw prior to putting the nut on the bottom. Run the nut up snugly into the countersunk hole, but be careful not

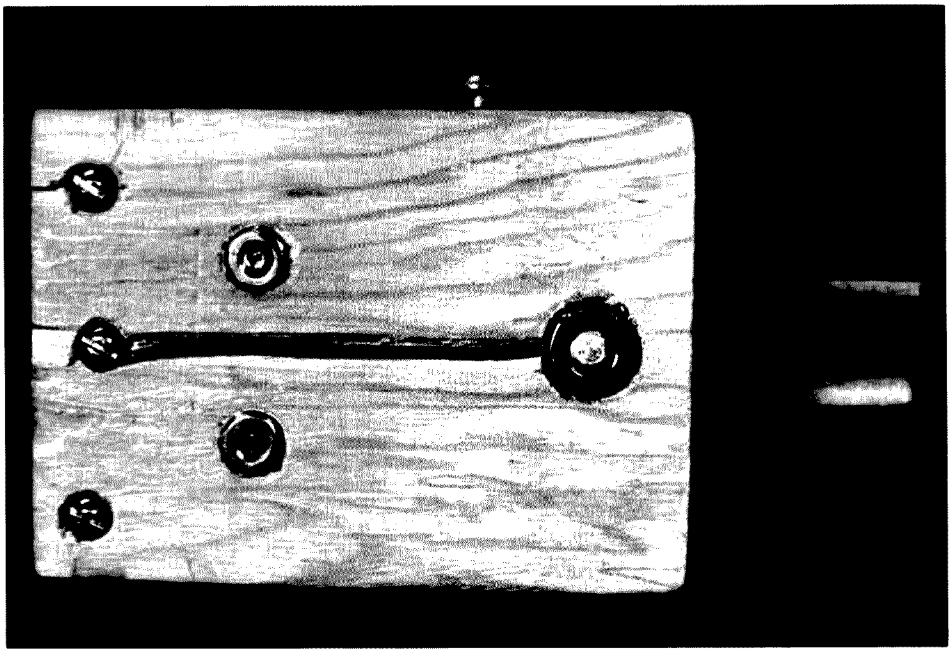

Photo C. Bottom view of base.

to pull the screw through the wood. Align the cut screw head as shown in the top view photograph (Photo D).

The paddle adjust brackets are more easily mounted before the paddles are mounted. I secured them in place, using one ½"-long wood screw (with large head) for each bracket. The use of only one screw per bracket provides a fine adjustment of paddle travel, as will be discussed later. See Fig. 6.

The center binding post screw is assembled next. I dressed the ground wire from the ¼-20 screw in the groove on the bottom side of the base. After inserting the 6-32 x 1" screw through the center hole B of Fig. 1, I wrapped the other bare end of the ground wire around the head of the screw used as the ground binding post. A nut on the top side of the base secured the screw in place.

Attach a 6-32 x 3/4" screw to each paddle with a single 6-32 nut. These are the dot-dash contacts. The screw head should be positioned toward the center of the paddle to contact the ¼-20 ground post. Cut two four-inch lengths of #20 stranded wire, and wrap the bare end of each wire around the 6-32 dot-dash contact screws protruding from the nut. Secure this wire with a second 6-32 nut on each paddle. Mount each paddle to the base, as shown in Fig. 7. The nuts on each side of the base secure the screw in a vertical position. The extra nuts and washer under the paddle are used as spacers. Adjust the height of the paddles so that the dot-dash contact screw heads hit the flattened head of the ¼-20 center ground post.

The 10-32 x 3/4" screws are mounted as shown in the detail of Fig. 6. These screws must be loose to allow the paddles to separate for insertion of the tension spring. I cut off and discarded the tightly coiled ends of the pen spring. The remaining part of the spring is space wound. I inserted one end of the spring into one tension spring hole in the paddle. By compressing the spring to one side using a small screwdriver, I was able to slip the second end into the tension spring hole of the other paddle. I then used a pair of pliers in one hand and a needle-nose pliers in the other to clamp the 10-32 nuts on either side of the paddle adjust brackets. For initial adjustment of the 10-32 travel adjust screws, I would suggest allowing 1/16" between the paddle contact screw and the center ground post.

Mounting of the dot-dash binding posts is next. If an armrest board is used, these 6-32 x 1½" screws should be inserted through the armrest and then through the base. The bare end of the wire from each paddle dot-dash contact should be wrapped around the screw, and then the first nut (see Fig. 7) should be tightened down, sandwiching the wire between the nut and the top of the base. Be sure to leave slack in this wire to allow the paddles to move freely. The second nut is used to connect the wires from the keyer to the squeeze key. I used a hexagonal pencil between the base and the armrest to attain the desired angle to suit my hand. These binding post screws adequately sandwich the pencil in place, so no glue is necessary. If an armrest board is not used, assembly of the dot-dash binding posts is identical to that described above, except the one thickness of the armrest board is eliminated. In this case, binding post screws that are ½" shorter than shown could be used.

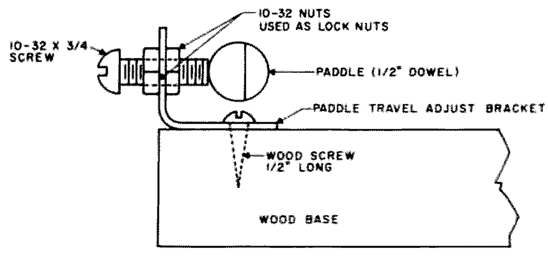

Fig. 6. Paddle adjust screw.

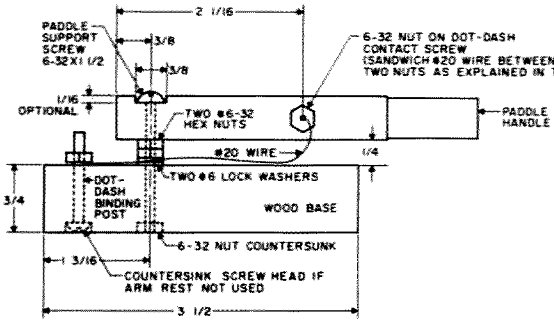

Fig. 7. Assembly of paddle to base. This side view shows the main support screw detail.

Adjustment

Prior to adjusting the squeeze key, run wires from the binding posts on the base to your keyer. This will permit you to try out the key and get the feel of sending with this type of key. Even if you have never used a paddle before, whatever does not feel comfortable will soon become obvious. There are three basic adjustments that can be made to tailor this key to your fist:

1. Angle of the key base to the horizontal (i.e., height of paddle handles);
2. Dot and dash paddle travel;
3. Paddle tension.

The angle that sets the paddle handles in the best position for your fist can be found by loosening the dot-dash binding posts and changing the position of the pencil backwards or forwards.

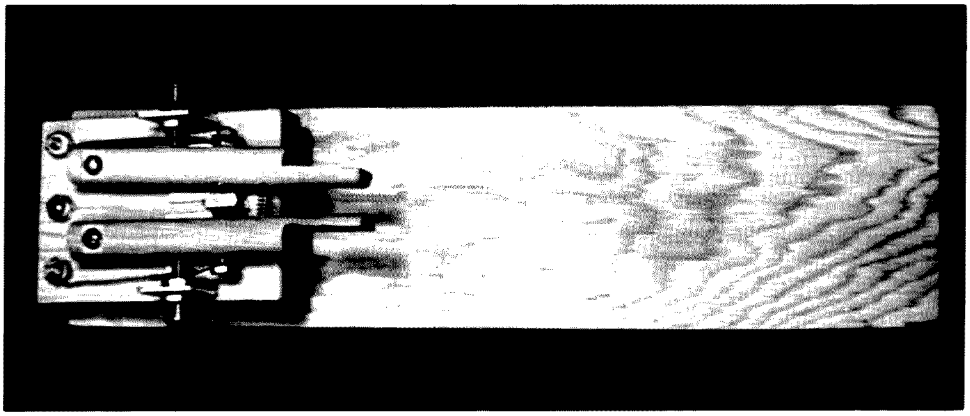

Photo D. Top view showing key and full armrest rest.

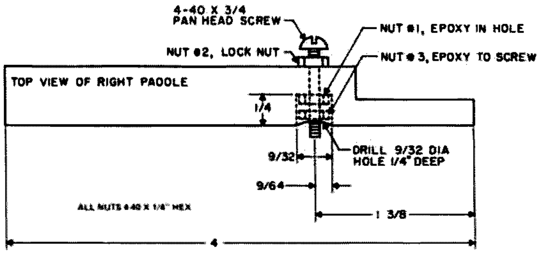

Fig. 8. Tension adjustment screw.

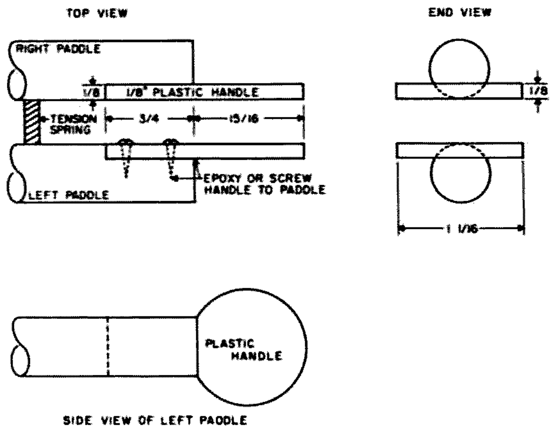

Fig. 9. Plastic paddle handles.

If you prefer the paddle handles to be low, the pencil may be eliminated.

Paddle travel has two adjustments per paddle. These interact to some degree with spring tension. I found that when I reduced the paddle travel, the tension had to be lowered also. The obvious adjustment is the 10-32 screws. After loosening the nut closest to the paddle with a long-nosed pliers, a screwdriver can be used to run the screw in or out as needed. You can obtain a finer adjustment by pivoting the dash paddle adjust bracket clockwise about its mounting screw. This makes the edge of the 10-32 screw hit the paddle and closes the gap. The dot paddle adjust bracket can be pivoted counterclockwise to close the gap.

Paddle tension adjustment is simple but irreversible. It consists of removing the spring and clipping off a turn or two with wire cutters and replacing the spring. This process is repeated along with the paddle travel adjustment until the desired feel is obtained. The irreversibility of this adjustment is compensated for by the zero cost of the pen springs. If one spring is cut too short, the next one can be made a bit longer. You could keep two or three spring lengths on hand if you wish to change the paddle tension, such as for a large change in sending speed.

Key Improvements Possible

The approach I have used in building this key probably qualifies as the simplest, which satisfies my present needs for building up my code speed. With more time and a little more cost, it is possible to add improvements to this key which might better meet your needs.

You could make the key look more professional by eliminating the armrest board. A lead block could be epoxied or screwed to the wood base to add weight and keep the key in one place. Holes could then be drilled and tapped for rubber or other nonskid feet, which would add stability. The lead and choice of feet size could be used to raise the key to the desired height for convenient keying. Be sure to add a layer of insulation between the wood base and the lead so as not to short out the contacts. A sheet of cardboard, cloth, or felt would be adequate for the low voltages found in most keyers.

To make paddle travel adjustment easier, one 10-32 nut could be epoxied to each adjust bracket. This would prevent unwanted screw movement during the adjustment process and would probably eliminate the need for a lock nut for home station use.

You could add a tension adjustment screw to eliminate trimming the length of the spring to secure the desired tension. One tension spring hole, say in the left paddle, should be built normally as described. The right paddle can be drilled as shown in the sketch of Fig. 8. The depth of this hole should exceed the thickness of the two nuts by 1/16". Drill a hole horizontally to provide a snug fit for a 4-40 screw. One thin nut, #1 in Fig. 8, should be epoxied in the 9/32" hole, keeping the epoxy out of the threads. When dry, run a second nut, #2 in Fig. 8, up on the 4-40 screw. Then the screw can be threaded through the hole, nut #1, and nut #3. With 1/16" to 1/8" of the end of the screw protruding beyond nut #3, epoxy the nut in place on the screw. With this improvement, the left end of the spring goes into the tension spring hole in the left paddle, but the right end slips over the end of the screw. To adjust the tension, simply loosen nut #2 (the lock nut) and turn the screw in to increase tension or out to reduce tension. When the desired tension is achieved, tighten the lock nut.

The first reaction of our South Peninsula Amateur Radio Klub (SPARK) Extra class study group was, "Did you build it out of clothespins?" This was the inspiration for a possible variation on the design. A wooden clothespin could be cut in half to make the two paddles. A similar and possibly easier approach would be to use a plastic clothespin. Using a pliers, the center spring could be removed, leaving two plastic pieces for the paddles. A less expensive material for the paddles would be difficult to find!

If you prefer the feel of plastic to wood, round or oval plastic paddle handles could be added to the wood dowel paddles. An empty Scotch tape dispenser is an inexpensive source of material, or you could buy 1/8" thick lucite. Cut the plastic to the size and shape you wish, and sand the edges. Instead of cutting the dowel handles as shown, the ends of the dowels could be slotted to accept the thin plastic pieces. Predrill clearance holes in the plastic and secure the pieces in place with small wood screws. If you wish to have the paddle handles closer together, reverse the flat side on the dowel paddles, as shown in Fig. 9.

You can improve the appearance of the key by carefully sanding and varnishing the wood parts. This would also help keep the key looking clean and new. The varnish should be applied to the bare wood parts; you'll want to avoid getting the varnish on a key contact or in adjustment screw threads.

Summary

This article has described how I built a simple but effective squeeze key in approximately six hours for less than two dollars in materials that were readily available. I have really enjoyed using this key. I get a kick out of the idea that something so simple that I made can be so useful. Even if you have a squeeze key for the home station, this key is so easy to build that you could make it and use it for your portable or field day rig. ■

Field Operations Bureau
Federal Communications Commission
1919 M Street NW
Washington DC 20554

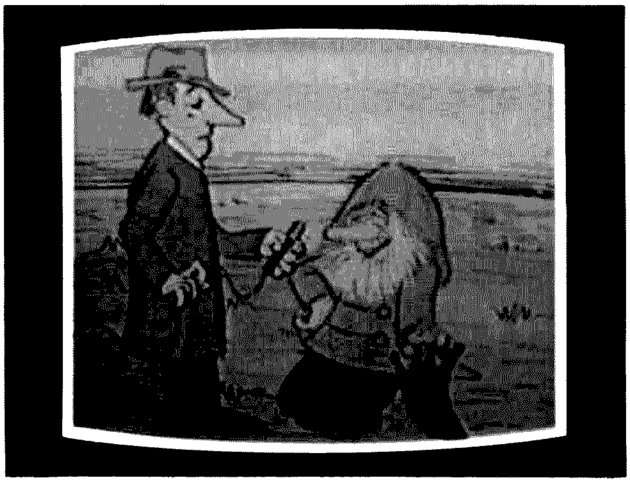

Normal picture. Use this normal picture for comparison with the other pictures shown in this series.

Official FCC RFI Report

—curing radio and TVI

Reprinted from ***How To Identify & Resolve Radio-TV Interference Problems,*** **U.S. Government Printing Office, Washington DC 20402, 1977.**

During the past few years, tremendous advances have been made in the field of radio and television communications. Communications by radio and television from any point on the Earth, and sometimes from points beyond the Earth, have now become commonplace. In recent years, the growth of two-way radio, permitting personal communications from motor vehicles and homes, has been explosive.

These advances in communication technology are not without problems. The radio frequency spectrum is becoming crowded, and interference problems, due to a lack of compatibility between the different radio systems, are becoming widespread. This is evidenced by the thousands of complaints of interference to home electronic entertainment equipment (television, stereo, electronic organ, telephone, tape recorder and other audio equipment) received by the Federal Communications Commission (FCC) each year.

Most of these interference problems can be traced to one or more of the following

Normal picture. Use this normal picture for comparison with the other pictures shown in this series.

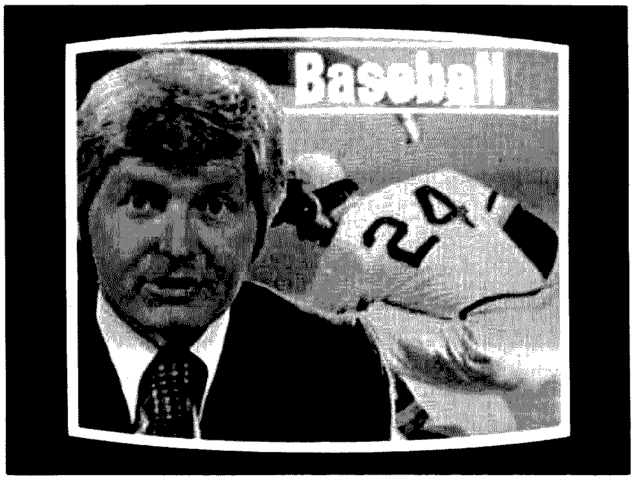

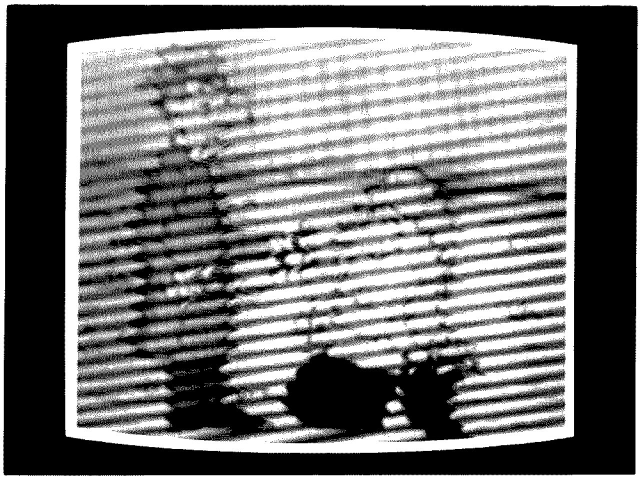

Radio transmitter interference. This is what your picture looks like when it is picking up the transmission of CB, amateur, police, or other radio transmitters. It will normally affect VHF channels only. You may notice that the interference pattern changes or moves as the radio transmitter operator talks. Do not confuse this interference with a horizontal control problem.

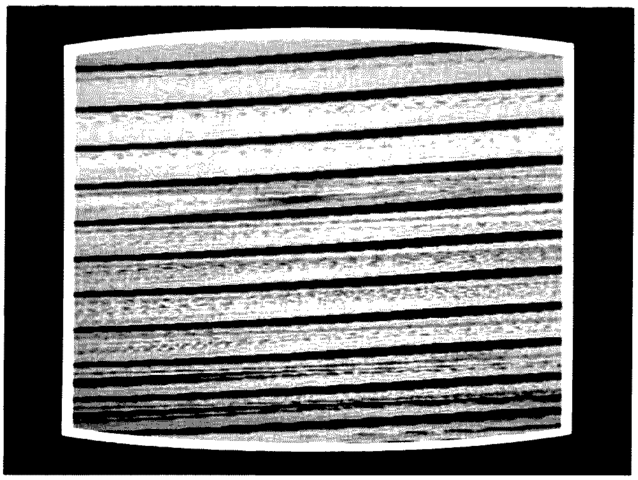

Horizontal control problem. When your set requires adjustment of the horizontal hold control or replacement of a bad tube or component, the above pattern will appear on your TV picture. The sound, if affected, may contain a high pitch tone. To eliminate, simply adjust your horizontal hold control or call your service representative to replace the bad tube or component.

factors:

1. Characteristics of the receiving system, e.g., television receiver or antenna systems design and installation.
2. Environment of the receiving system, e.g., distance from television transmitter and intervening terrain or presence of nearby radio transmitter.
3. Characteristics of radio frequency generating devices, e.g., Citizens Band (CB) radio transmitters or other radio transmitters.
4. Practices of radio transmitter operator, e.g., CB user operating an illegal overpower transmitter or amplifier.

The control of some of the above factors is within the jurisdiction of the Federal Communications Commission. For example, the Commission has technical standards for radio transmitting devices such as CB transmitters; these technical standards were strengthened by the Commission, effective January 1, 1977. Also, the Commission has rules concerning the way in which radio transmitters are operated.

Obviously, control of some of the above factors is *not* within the jurisdiction of the Commission. The quality

Electrical interference. This is what your television picture looks like when your set is reacting to any of the following devices operated in or near your home: hair dryers, electric shavers, mixers, blenders, power saws, vehicle ignition systems, and other similar devices. When this type of interference is occurring, you may also hear a sizzling or buzzing sound along with the sound of the TV program. Do not confuse this interference with a poor TV signal.

Poor TV signal. This is the type of television picture you will be receiving if you are far away from the TV transmitter site or if there is a building or mountain between you and the TV station. A defective antenna, improper antenna orientation, or disconnected or broken lead-in wire may also cause this problem. The sound of your TV usually will not be affected unless the TV signal is extremely weak. You can improve the quality of the signal by installing a higher antenna, using a directional antenna or a signal amplifier, or repairing the lead-in wire. Check with your TV sales and service representative on antenna systems available.

of the television signal received at your home is one such factor, because such quality is most often influenced by the distance you live from the television station and the intervening terrain. Also, the Commission has no standards for the design and installation of television receivers and associated antenna systems. As you will find in this article, many interference problems can be corrected by modification and improvement of the television receiving systems.

The purpose of this article is to help you identify and resolve interference problems which you can correct. By reading it, you will discover that identifying and resolving interference can be an interesting challenge. You will not only be doing your own detective work in locating the source, but you also will be resolving the problem by following the suggestions contained in the "Home Remedies" section.

As you begin to identify the type of interference you are experiencing, keep in mind that not only must your equipment be able to receive and amplify the desired signal, but it also must reject all unwanted signals and noise. This means that, even if the equipment allegedly causing the interference is being properly operated, it is still possible to experience interference.

If you have followed the home remedies suggested, and the interference continues, you may want to contact your service representative for assistance. When you contact your service representative, we suggest that you provide that person with a copy of the Service Representatives section of this article. This section has been designed specifically for a technician's use. There is also a section directed to the radio operator which you may wish to show to the operator of the radio transmitter that is allegedly causing you interference.

If you find, after following the guidelines for resolving interference that are provided in this article, that you still are experiencing interference problems, you may want to contact one of the Sources for Assistance listed in Appendix A.

We hope this article will serve as a useful tool in helping you to resolve your interference problem.

Caution: To avoid the possibility of a shock hazard, fire, or violation of your equipment warranty, any *internal* modifications of your equipment should be done *only* by a qualified service representative.

IDENTIFYING INTERFERENCE TO TELEVISION

See photos.

HOME REMEDIES FOR RESOLVING RADIO TRANSMITTER TV INTERFERENCE

Installing A High Pass Filter

There are no set procedures for eliminating television interference — it is a matter of eliminating the most likely sources of interference a step at a time. The first step is to install an inexpensive high pass filter on the back of your TV set. In making this installation, follow these procedures:

1. Determine the type of antenna wire that is connected to your TV set. There are two possibilities:

Coaxial cable — a round lead-in wire which requires a filter "impedance" of 75 Ohms. (See Fig. 1A.)

Twin lead wire — a flat wire which requires a filter "impedance" of 300 Ohms. (See Fig. 1B.)

2. Purchase the filter which matches the type of antenna wire coming from your set. The "impedance" information mentioned above will be on the filter label. *Do not* use a combination of twin lead and coaxial cable without proper matching transformers (often called baluns). Filters are available in most stores that sell or repair television sets. Fig. 2 provides a small example of what high pass filters look like.

3. Carefully read the instructions that are provided with the filter. You will be installing the filter on the back of your TV set, as near to the antenna terminal as possible. The antenna terminal and the filter terminal will look like either Fig. 1A or 1B, depending upon the type of wire you are using — coaxial or twin lead.

4. If you are on a cable system, you may still install the filter at the antenna terminal. However, if the interference continues, contact the cable company repair service for assistance. *Do not* attempt to modify the cable system yourself.

5. The following information on installing the filter should answer any additional questions you may have.

a. Disconnect the antenna wire (twin lead or coaxial) from the television set antenna terminals.

b. Connect the wire from the antenna to the input terminals of the filter.

c. For twin lead wire, connect a very short (1" to 2") "jumper"

Normal picture. Use this normal picture for comparison with the other pictures shown in this series.

Normal picture. Use this normal picture for comparison with the other pictures shown in this series.

FM interference. Interference from a nearby FM broadcast station will cause this type of pattern to appear on your TV screen. Although it normally will affect TV channel 6 only, one additional channel in the channel 2-13 series may occasionally be affected. It sometimes affects both the picture and sound of your set. Note that the interference pattern may change or vary with the sound of the FM broadcast station program, not *the sound of the TV program. Do not confuse this interference with a fine tuning problem.*

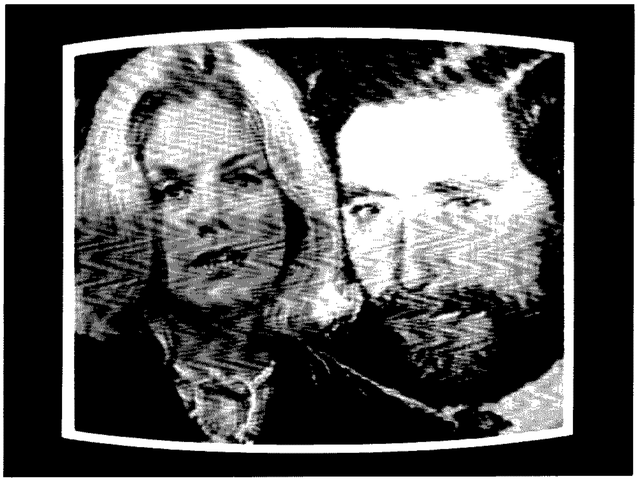

Fine tuning problem. This is the type of pattern which will appear on your screen if the fine tuner of the TV set is not properly adjusted. Although it looks similar to FM interference, you will note that the pattern changes with the sound of the TV program. Readjust the fine tuning control of the TV set to eliminate the problem.

wire from the antenna input terminals of the set to the filter (see Fig. 3). For coaxial cable, it will be necessary to obtain a jumper cable that has the proper connectors already installed. (This can be purchased at the time you buy the coaxial filter.)

d. Be sure that, in the case of *twin lead wire*, the actual wires are making contact with the terminals. For *coaxial cable*, be sure the connector plugs are properly installed on the coaxial cable.

e. If you have an amplifier in your antenna system, you should have a filter installed ahead of the amplifier and another filter ahead of the TV receiver

Co-channel interference. This is the type of pattern which will appear on your screen when your set is simultaneously receiving two TV signals. Note that the two images are different, as though one picture has been placed on top of the other. Co-channel interference is due to either atmospheric conditions or the location of your home in relation to the location of the TV stations. If the problem is from atmospheric conditions, little can be done to correct it. However, the problem is usually temporary. If it is caused by the location of your home in relation to the location of the TV stations, use of a highly directional antenna may help to eliminate the problem. Do not confuse this interference with ghosting.

Ghosting. This is the type of picture you will see when 1) the TV signal is reflected, or 2) the TV antenna or antenna lead-in wire is in poor condition. When "ghosting" occurs, it means that the TV signal is being reflected off a mountain, building, or other man-made structure, with the signals being sent over different paths to your TV set and arriving at slightly different times. With "ghosting," note that the two images are the same. Rotation of your TV antenna to a new position or installation of shielded lead-in wire may resolve this problem. If rotation of the antenna does not resolve the problem, have a service representative check the condition and/or placement of the antenna and antenna lead-in wire.

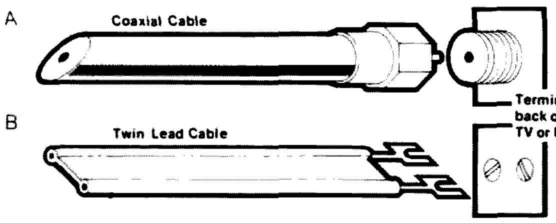

Fig. 1.

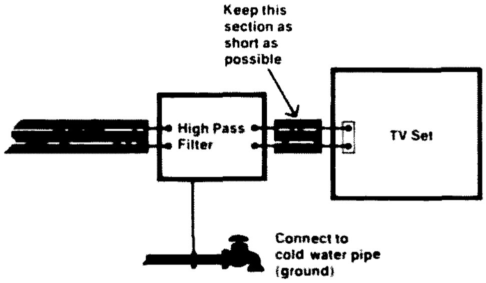

Fig. 3.

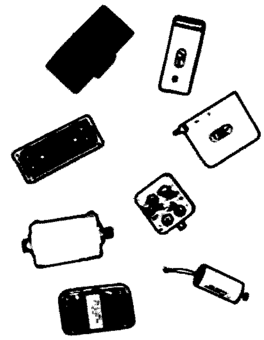

Fig. 2. Montage of filters.

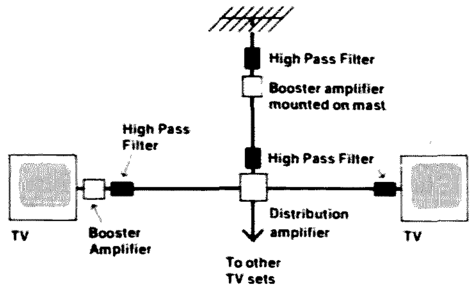

Fig. 4.

input terminals (see Fig. 4). If the amplifier is located close to the receiver, then install the filter before the amplifier only.

Note: Booster amplifiers usually are located near the back of the TV set; *mast-mounted* (outdoor) amplifiers are usually located on the antenna; and *distribution* amplifiers are usually located somewhere in the distribution system. If a distribution amplifier is in your antenna system, then be sure to trace the entire length of the antenna system, because amplifiers are usually in out-of-the-way places (for example – clothes closets, basements, etc.).

f. The connecting wires between the filter and amplifier, and between the amplifier and antenna terminal, should be as short as possible.

g. The instructions provided with the filter you bought may call for a ground connection. The wire should be as short as possible and connected between the high pass filter ground terminal and a metallic cold water pipe or a ground rod. Use bell wire for this connection (see Fig. 3). Bell wire can be obtained from most variety stores.

h. If installation of the filter at the TV antenna terminals does not entirely eliminate the interference, you should then contact your service representative to install a high pass filter inside the TV set at the tuner input terminals. *Internal* modifications to your set should be done ONLY by a service representative. Information to assist your service representative is contained in the Technical Information For Service Representatives section.

HOME REMEDIES FOR RESOLVING ELECTRICAL TV INTERFERENCE

Electrical interference is caused by two sources:

1. Vehicle ignition systems, and
2. Electrical devices.

The first step in attempting to resolve electrical interference problems is to locate the source of interference.

Interference From Vehicle Ignition System

1. Ignition interference sounds like a "popping" noise in the sound system of your TV that rises in intensity; the "pops" occur closer and closer together as the speed of the engine speeds up. This can be caused by any vehicle ignition system, such as gasoline-operated lawn mowers, snowmobiles, automobiles, etc.

2. If the interference is to television receivers, you may hear the same popping noise in the sound and also see "dancing dots" in the picture of the set. You may only see the interference, and not hear the "popping" noise in the sound.

3. If your own vehicle is causing interference, you may wish to install a commercially-manufactured kit in your vehicle to reduce the ignition noise. Other remedial measures include relocating your antenna, raising the antenna, and using shielded lead-in antenna wire.

Interference From Electrical Devices

1. Any one or more of the following electrical devices may be causing the interference you are experiencing on your television set or AM/FM radio: electric razor, vacuum cleaner, fan, drill, electric blanket, bake oven, fluorescent light, arc light, light dimmer control, relay, static from machinery, lightning arrestor, adding machine, cash register, circuit breaker, ultraviolet lamp, germicidal lamp, defective wiring, loose fuse, arc welder, switch contact (such as on dishwashers and other home appliances), refrigerator, water pump, sewing machine, light blinker (including Christmas tree light blinker), electric heating pad, aquarium warmer, neon sign, door bell circuit/transformer, toy (such as electric train), sign flasher, antifriction bearing, printing press static eliminator, calculator, insulator, incandescent lamp (new or old), sun lamp, electrical pole (ground wire cut or poor contact), loose electrical connection, electric fence unit, furnace control, power company transformer, smoke precipitator.

2. In attempting to locate the specific device causing the interference, consider the following suggestions:

a. If you have a portable radio that is affected by the interference, use the radio as a detection device to assist in locating the source of interference. With the portable radio, move from room to room and determine in which room the interference appears to be the loudest. Then look for one of the devices

listed above and unplug it to see if the interference disappears. If several devices listed above are in the room, unplug them, one at a time, until the interference disappears.

b. If a portable radio is not affected, you can go to the main fuse or circuit breaker box in your home, remove one fuse at a time, or shut off one breaker at a time, and see if the interference goes away.

c. If it does not go away when the first fuse or circuit breaker is off, replace the fuse or turn the circuit breaker back on and continue on until the interference does disappear. When the circuit that supplies the power to the TV or radio is turned off, it will be necessary to plug that device into some other circuit to determine if the interference is being generated by a device in the same room as your TV or radio.

d. When the interference disappears with a fuse removed or circuit breaker off, you should go to the room supplied by that circuit and look for any of the devices listed above. If any of the listed devices are found in the room, replace the fuse or turn the circuit breaker back on. Then unplug the device suspected of causing the interference. If several devices are in the room, unplug them, one at a time.

3. If you are unable to locate within your own home the device that is causing the problem, the interference may be coming from a device located in your neighbor's home. With the cooperation of your neighbor, follow the same procedures described above.

4. If your investigation leads you to suspect that a power line or power company equipment is the source of interference, you should contact the power company to assist you in resolving the problem.

5. Short duration interference, such as that from electric drills and saws, may be very costly to attempt to eliminate; you may just want to "live with it."

6. To *resolve* electrical interference, modifications must be made to the interfering device. This should only be done by a qualified service representative. Information for your service representative is contained in the Technical Information For Service Representatives section.

HOME REMEDIES FOR RESOLVING FM TV INTERFERENCE

The installation of an inexpensive FM band rejection filter is the first step to take in resolving FM interference. In making this installation, follow these procedures:

1. Determine the type of antenna wire you have connected to your TV set. There are two possibilities:

Coaxial cable — a round lead-in wire which requires a filter "impedance" of 75 Ohms (see Fig. 1A).

Twin lead wire — a flat wire which requires a filter "impedance" of 300 Ohms (see Fig. 1B).

2. Purchase the appropriate filter, according to the type of antenna wire you have. The "impedance" information mentioned above will be on the filter label. *Do not* use a combination of twin lead and coaxial cable without proper matching transformers (often called baluns). Filters are available in most stores that sell or repair television sets.

3. Carefully read the instructions that are provided with the filter. You will be installing the filter on the back of your TV set, as near to the antenna terminal as possible. The antenna terminal and the filter terminal will look like either Fig. 1A or 1B, depending upon the type of wire you are using — coaxial cable or twin lead wire.

4. If you are on a cable system, you may still install the same FM band rejection filter at the antenna terminal. However, if the interference continues, contact the cable company repair service for assistance. *Do not* attempt to modify the cable system yourself.

5. The following information on installing the filter should answer any additional questions you may have.

a. Disconnect the antenna wire (twin lead or coaxial) from the television set antenna terminals.

b. Connect the wire from the antenna to the input terminals of the filter.

c. For twin lead wire, connect a very short (1" to 2") "jumper" wire from the antenna input terminals of the set to the filter (see Fig. 3). For coaxial cable, it will be necessary to obtain a jumper cable that has the proper connectors already installed.

d. Be sure that, in the case of *twin lead wire*, the actual wires are making contact with the terminals. For *coaxial cable*, be sure the connector plugs are properly installed on the coaxial cable.

e. If you have an amplifier in your antenna system, you should have a filter installed before the amplifier and another filter ahead of the TV receiver input terminals (see Fig. 4). If the amplifier is located close to the receiver, then install the filter before the amplifier only.

Note: Booster amplifiers usually are located near the back of the TV set; *mast-mounted* (outdoor) amplifiers are usually located on the antenna; and *distribution* amplifiers are usually located somewhere in the distribution system. If a distribution amplifier is in your antenna system, then be sure to trace the entire length of the antenna system, because amplifiers are usually in out-of-the-way places (for example — clothes closets, basements, etc.).

f. The connecting wires between the filter and amplifier, and between the amplifier and antenna terminal, should be as short as possible.

g. The instructions provided with the filter you bought may call for a ground connection. The wire should be as short as possible and connected between the FM band rejection filter ground terminal and a metallic cold water pipe or a ground rod. Use bell wire for this connection (see Fig. 3). Bell wire can be obtained from most variety stores.

h. If the filter does not entirely eliminate the interference, you should call your service representative. The Technical Information For Service Representatives section is provided to assist the service representative.

HOME REMEDIES FOR RESOLVING AUDIO INTERFERENCE

Interference to audio devices, such as tape recorders, record players, electronic organs, telephones, hi-fi amplifiers, etc., is caused when the equipment responds to the transmission of a nearby radio transmitter.

Audio interference (often called audio rectification) may also affect the sound (audio) portion of your TV

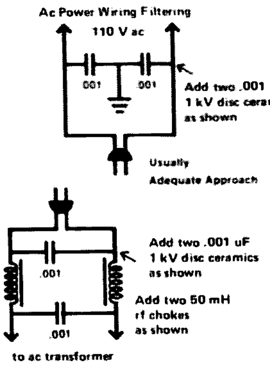

Fig. 5.

and AM/FM radio.

When this type of interference is occurring, you will hear the voice transmissions of the radio transmitter and/or the volume level of the audio device you are using may decrease.

Audio interference is a condition that usually requires internal modification of your equipment. For safety reasons, it is recommended that any modifications be made by a qualified service representative.

Due to the complexity of resolving interference to an electronic organ, again, servicing should be done only by an experienced service representative. More detailed information should be obtained from the equipment manufacturer.

For telephone interference, contact your local telephone company. They can install a 1542A or similar inductor in the telephone instrument to resolve the problem. The information provided in this article applies primarily to privately-owned equipment and should not be applied to equipment owned by the telephone company. Bell System personnel can obtain additional data in Section 500-150-100 of the "Bell System Practices — Plant Series" manual.

For all other audio devices, you may wish to take the following steps before calling your service representative.

1. Replace *unshielded* wire between the amplifier and speakers with *shielded*

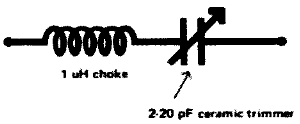

Fig. 6.

wire.

2. Ground the affected equipment to a metallic cold water pipe or ground rod. A ground connection can be made with a short piece of bell wire which can be obtained at most variety stores. *Do not* ground "ac-dc" type devices. Normally, devices which may safely be grounded will provide a grounding terminal. If no terminal is provided, then you should consult a qualified service representative for advice.

3. If the interference is not eliminated after taking these steps, you must call a qualified service representative. The Technical Information For Service Representatives section is provided to assist your service representative in resolving the problem. You may also wish to discuss the matter with the operator of the radio transmitter, sharing the information in the Radio Operator Guidelines section of this article.

TECHNICAL INFO FOR SERVICE REPRESENTATIVES

Resolving Radio Transmitter Interference

There are no set procedures for eliminating television interference — it is a matter of eliminating the most likely sources of interference a step at a time. You may be required to take several steps before the interference problem is resolved. Once you have installed the filter called for, or made the adjustment that you were instructed to do, leave the modifications in place and proceed to the next step.

To begin, check to see if a high pass filter has been installed on the TV set at the antenna terminals. If the interference is still present after the installation of a high pass filter, proceed with the following steps:

Check Radio Transmitter

1. Contact the operator of the radio transmitter identified as the source and, with his/her cooperation, determine if the transmitter is operating properly. You may also wish to share the Radio Operator Guidelines section of this article with the operator. Areas of concern should be:

a. Is the transmitter properly grounded? (This means a good radio frequency ground. A single piece of wire to a ground rod may be an open circuit to rf.)

b. Are harmonics and/or spurious emissions present?

c. Is the transmitter cabinet radiating energy?

2. If the transmitter is not grounded, connect the chassis to a good earth ground with large diameter wire or copper strap. This should assist in eliminating radiation of energy from the cabinet.

3. Next, install a low pass filter on the transmitter antenna circuit to see if any difference occurs in the interference pattern. If a change occurs, the interference is probably caused by harmonics and/or spurious emissions from the transmitter. If no change occurs in the interference pattern, it is probably being generated at some point in the TV reception system.

Check TV Reception System

1. Conduct a visual inspection of the TV antenna, lead-in wire, and lightning arrestors. This may reveal a source of trouble. Corroded connections or deteriorated lead-in wire could be at fault and should be repaired.

2. Assuming no faulty conditions are found, or if found, they are corrected, and the interference is still present, look for an amplifier in the line. Amplifiers are highly susceptible to radio frequency (rf) energy.

Note: Booster amplifiers usually are located near the back of the TV set; *mast-mounted* (outdoor) amplifiers are usually located on the antenna; and *distribution* amplifiers are usually located somewhere in the distribution system. If a distribution amplifier is in the antenna system, then be sure to trace the entire length of the antenna system, because amplifiers are usually in out-of-the-way places (for example — clothes closets, basements, etc.).

3. If an amplifier is in the system, remove it from the circuit. If you find that this eliminates the interference, reconnect the amplifier, but protect the amplifier by a) grounding, b) enclosing it in a metallic rf-proof housing and grounding the housing, or c) installing a high pass filter at the input to the amplifier. If one filter improves the condition but does not entirely eliminate the interference, install two filters in series.

4. If no amplifier is utilized, or the interference still persists after following one or all of the above steps, check the TV receiver system.

Check TV Receiver System

1. An ac power line rf filter should be installed to determine if the rf from the transmitter is entering the TV via the power cord. (A line filter may be either purchased or constructed by following the schematic in Fig. 5.)

2. If no change is found with the power line filter installed and the antenna disconnected, then the set itself is responding to the rf energy.

3. The most likely internal circuit in the set to be affected by a radio transmitter is the tuner. Disconnect the antenna input lead inside the set directly at the tuner. If the interference is eliminated, then install a high pass filter at the tuner.

4. If the interference is still present after installing the filter at the tuner, it will be necessary to refer to service data for the set and check each stage of the set

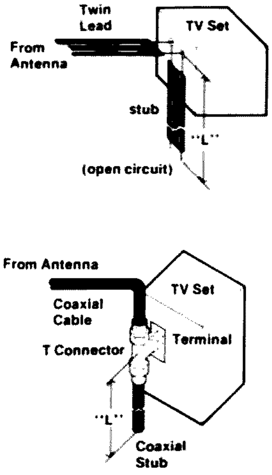

Fig. 7.

for undesired response.

CB Interference To TV Channel 2

1. Second harmonic interference from a CB transmitter to channel 2 television may exist even though the transmitter meets FCC specifications for harmonic radiation. In such cases, a tuned filter across the antenna terminals of the television should help. The filter may be an inductor and capacitor in series as in Fig. 6. The filter should be tuned for minimum interference.

2. A second method is to put an open circuit, quarter-wave, tuned stub across the antenna terminals. The stub should be made of the same type of wire as the antenna input terminals of the television. The initial stub length should be 37" for RG-59/U coax or 48" for 300-Ohm twin lead.

3. After connecting the stub, cut the unterminated end of the stub off in 1/8" to 1/4" sections until the interference is eliminated. Refer to Fig. 7. For harmonics falling on other TV channels, such as channel 5, 6, or 9, the length of the stub may be appropriately shortened according to the following formula.

$$\text{Length in inches} = \frac{2952V}{f},$$

where V = velocity factor of line and f = frequency in

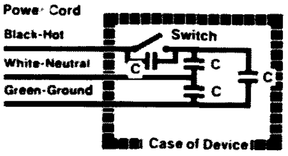

Fig. 8. C = .001 uF, disc ceramic.

megahertz.

Amateur Interference To TV Channel 2

1. One additional type of interference from a nearby transmitter is unique to the amateur 6 meter band – 50-54 MHz. Since 6 meters is immediately adjacent to channel 2 television (54-60 MHz), interference to channel 2 may occur.

2. In most cases, installation of an open circuit, quarter-wave, tuned stub at the antenna terminals of the television set should be effective. It should be connected as shown in Fig. 7.

3. If RG-59/U is used as the TV lead-in wire, the initial length of the stub should be 42". If 300-Ohm twin lead is used, the initial length should be 53".

4. After the stub is attached to the television, begin cutting off the unterminated end of the stub 1/8" to 1/4" at a time until the interference is eliminated. If the interference is reduced, but not eliminated by this method, add a second stub directly to the input terminals of the tuner. The theoretical final length of the stub should be:

$$\text{Length in inches} = \frac{2952V}{f},$$

where V = velocity factor of line and f = frequency in megahertz.

5. If the interference continues, share the information in the Radio Operator Guidelines section with the operator of the radio transmitter.

Resolving Electrical Interference

1. Please read through the procedures outlined in the Home Remedies section before proceeding. If the

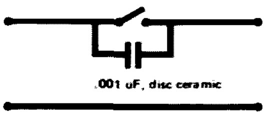

Fig. 9.

steps in the previous section have been taken, you should now know the source of the interference.

2. Before proceeding with the following steps to modify the device located as the source of interference, you should check the local electrical codes to determine if the device may be modified, and whether a licensed electrician must modify the device.

Caution: All bypassing of devices with capacitors should be done with extreme care to insure that the capacitors do not short out the ac line. Dangerous voltages exist which can cause electrocution if mishandled. Also, avoid power wiring which can cause the full ac line voltage to appear on the case of the device.

3. Since interference from an electric drill or saw may be of short duration, we suggest no modifications be made to the device (mainly because it may be very difficult and time-consuming to modify the device). If, however, interference is of long duration and you wish to take on this task, proceed as follows:

a. Interference from a drill or saw is actually caused by arcing between the brushes and commutator. The interference then is transmitted through the power cord. Bypassing each side of the line to ground with a capacitor, and each side to the other, may be helpful. Also, bypass the switch. Fig. 8 shows the schematic involved. The bypassing should be internal to the device in question.

4. Electric blankets, fish tank heaters, and other thermostatically-controlled appliances with worn and

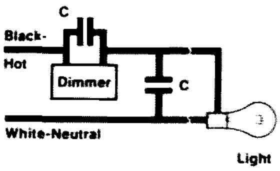

Fig. 10. C = .001 uF, disc ceramic.

pitted contacts cause interference because of contact arcing of the breaker points. This can be eliminated by bypassing the contacts with a .001 uF capacitor or replacing the worn or pitted contacts. (See Fig. 9.)

5. Defective devices such as doorbell transformers should be replaced.

6. Dimmer switches that utilize an scr or triac can produce tremendous interference which is very difficult to eliminate. This is due to the approximate square wave output that is produced by the switching at the scr or triac. However, bypassing in a manner shown in Fig. 10 may be helpful.

7. Since resolving electrical interference has to proceed on a case-by-case basis, you should always consider adequately bypassing any component of the circuit that arcs or distorts the ac sine wave with ceramic condensers.

Resolving FM Interference

There are no set procedures for eliminating FM interference – it is a matter of eliminating the most likely sources of interference a step at a time. You may be required to take several steps before the interference problem is resolved. Once you have installed the filter called for, or made the adjustment that you were instructed to do, leave the modifications in place and proceed to the next step.

1. To begin, check to see if an FM band rejection filter has been installed on the TV set at the antenna terminals. If not, read the Home Remedies section of this article.

2. If the installation of an

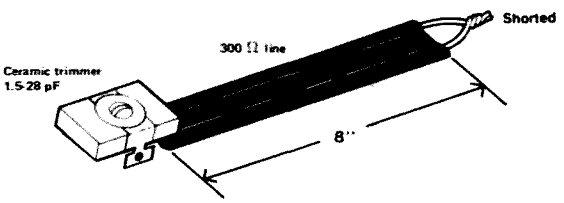

Fig. 11.

FM band rejection filter is not effective, then a tuned stub trap should be constructed (see example in Fig. 11). The trap should be placed on and parallel to the lead-in and tuned for minimum interference. Then slide the trap along the line to further reduce interference. Finally, tape the trap to the lead-in in the most effective position.

3. Another type of stub, called an open circuit quarter-wave type, can be made from the same type of wire as the antenna lead-in wire (see Fig. 12). The initial length of the stub should be 24" for RG-59/U coaxial cable or 29" for 300-Ohm twin lead wire. For other cables, the initial length can be determined by the general formula:

Length in inches =
(35) (Velocity factor of line)

Note: If "F"-type tee connectors are not available, you may use BNC-type connectors.

4. If connecting the stub to the antenna terminals is not completely effective, connect a second stub of the same length directly to the input terminals of the tuner, inside the television set. This should eliminate the interference.

Resolving Audio Interference

1. Audio interference is defined as reception of radio frequency (rf) energy by an audio amplifier. The rf energy is then rectified, or, more properly, "detected," by an electron tube, transistor, diode, poor solder joint or ground, or integrated circuit. The detected signal is then treated identically as a normal audio signal appearing at the amplifier input terminals. The effects of audio interference vary with the type of modulation employed by the transmitter. The following list shows expected effects:

AM – The voice or music will be heard as any normal audio signal applied to the amplifier. The voice or music may be extremely loud and slightly distorted.

SSB (Single Sideband) – The voice will sound practically unintelligible and garbled.

FM – Usually no sound will be heard; however, a decrease in the volume of the amplifier will be noted when the radio transmitter is on. Clicks may be heard when a two-way radio transmitter is keyed and unkeyed. A "frying" noise (such as bacon sizzling) may also be heard.

TV – Audio rectification of a TV signal will sound like a buzz. The buzz will change its sound as the television picture changes.

2. In attempting to isolate where in the audio chain the rectification is taking place, check to determine if the volume control has any effect on the interference. If the volume of the interfering signal changes with a change in the volume control, then the rectification is occurring *before* the volume control. If the volume control has minimal or no effect, the rectification is occurring *after* the volume control. You should next proceed to the appropriate set of solutions. If the solutions described below do not resolve the audio interference problem, contact the manufacturer of the audio device for further assistance.

Rectification Before the Volume Control

1. A multiple input audio

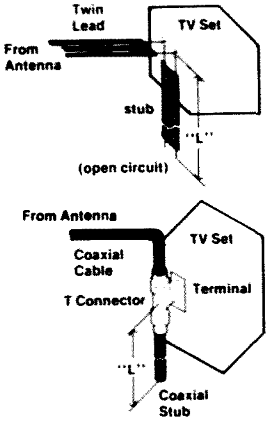

Fig. 12.

amplifier may be susceptible to audio interference on only one or some of the available inputs. Generally, low-level, high-impedance inputs, such as those in turntables, cartridges, tape heads, or microphones, are the most susceptible. If, for example, the only input affected is from a turntable, then disconnect the turntable cartridge from the amplifier at the input terminals of the amplifier.

2. If the interference is eliminated, then the cartridge, or wire between the cartridge and amplifier, is sensing the rf. Proper grounding, connections, shielding, and rf bypassing are the keys to solving audio rectification. Often, a "process of elimination" approach must be used.

Grounding

1. All grounding should be to a good earth ground such as a metallic cold water pipe or 8' ground rod. Ground leads should be as short as possible. Remember, a dc ground may appear as an open circuit to rf energy. Ground leads should be of as large a diameter wire as practicable. Finally, grounding of the chassis, shields of speaker leads, and other external connections should be made to a common point to avoid ground loops. (Ground loops are circuits that form a dc ground, but contain rf-circulating currents.) Fig. 13 shows the correct and incorrect methods of grounding components.

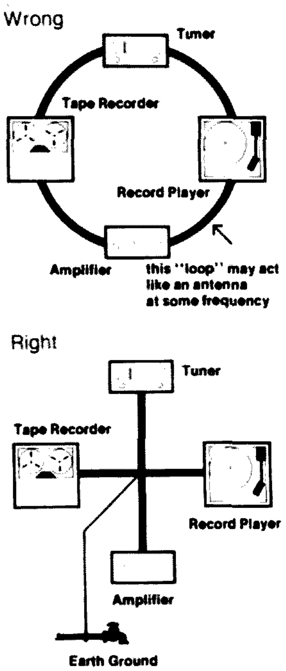

Fig. 13.

Caution: Some equipment chassis are at line voltage potential and cannot be connected directly to ground. In these circumstances, a ceramic capacitor of 0.001 uF at 1 kV should be placed in the ground lead. This capacitor appears as a short to rf, but as an open circuit to ac.

Shielding

1. All speaker leads from audio equipment should be made of two conductor shielded wires. The shield should be grounded only at the amplifier end, and should not be used as an audio conductor. The two internal wires should be connected to the speaker.

Power Line Filter

1. Rf may be entering the audio device through the ac power line. Several power line filters are commercially available. If necessary, a power line filter like the one shown in Fig. 5 may be constructed, placing the filter as close as possible to the point where the ac cord enters the amplifier.

Poor Electrical Connections

1. Occasionally, poor solder connections or old electrolytic capacitors may be the cause of the audio rectifi-

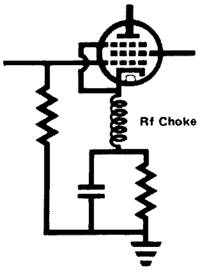

Fig. 14.

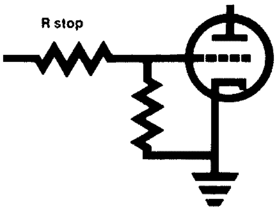

Fig. 15.

cation problem. If tests to this point have failed, try resoldering all connections in the amplifier and replacing electrolytic capacitors. Before actually replacing the electrolytic capacitor, try paralleling the capacitor with another one of like value. This should reveal the presence of a bad capacitor.

Rectification After the Volume Control

1. When the volume control is in its minimum position and the interference is still heard, then an rf filter is required in the audio amplifier. It is extremely important that the filter does not affect the audio response of the amplifier.

Tube-Type Equipment

1. Interference in tube-type equipment can be avoided by connecting an rf choke (ranging in value from 2 millihenrys to 5 millihenrys) in the upper end of the cathode circuit, as shown in Fig. 14.

2. The choke coil must *not* be bypassed by a capacitor because the dc resistance of such coil is generally quite low and the bias voltage is not greatly affected. However, if the dc resistance does affect the bias voltage, the value of the bias resistor may be decreased to compensate for the dc resistance of the

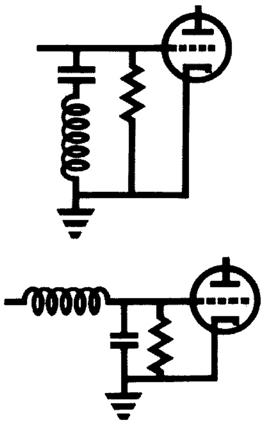

Fig. 16. A combination RC filter is shown in Fig. 17 with the recommended values.

choke.

3. A grid-stopping or "swamping" resistor can also be employed. A resistor, ranging in value from 1k to 75k Ohms, can be connected in series with the grid as shown in Fig. 15.

4. Capacitors, rf chokes, and resistors can be used in combinations to make filters to eliminate the interference. For circuits such as those shown in Fig. 16, use a choke of 2 to 6 microhenrys and a capacitor of about 10 picofarads. A combination rf filter is shown in Fig. 17 with the recommended values.

Transistor Equipment

1. Interference in transistor equipment can usually be eliminated with the use of a shunt capacitor as shown in Fig. 18. A resistor/capacitor combination can be used as shown in Fig. 19. It is important that the filter network does not affect the biasing of the transistor or the frequency response of the amplifier.

2. The values of the capacitors used are not critical, but there are some pitfalls to look out for in using capacitors. For example, ceramic caps are best, whereas paper caps do not work at radio frequencies.

3. Leads should be kept as short as possible. Grounds should be made directly to the emitter and not to the chassis or other grounds,

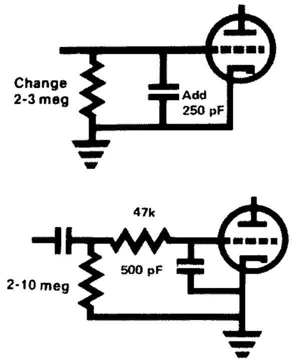

Fig. 17.

since they may have more rf than the signal lead. If the signal increases, then a ground loop has been created, and the inductor method should be tried.

4. In areas of high rf energy, the inductor approach is more effective than the shunt capacitor. An rf choke can be used in series with the input and output leads of the amplifier stage, since the rf can enter a stage through either. This method and the values are shown in Fig. 20.

Electronic Organs

1. Organ circuits can be isolated by the use of the Swell Pedal, band box volume, or tabs (draw bars). By adjusting each one of these different controls, the effect on the interference can be noted. If the volume of the interference changes, the rf is being detected by the amplifier at a point before that particular control. If the volume of the interference does not change, then the interference is being detected after that control.

2. Using this method, the point at which the rf is entering the organ can be determined, and the appropriate filter, as described above, can be inserted into the circuit.

Telephones

1. Telephone rf interference can be eliminated by the use of a 1542A or similar inductor. This inductor must be installed inside the phone and not at the baseboard. To install the inductor inside the

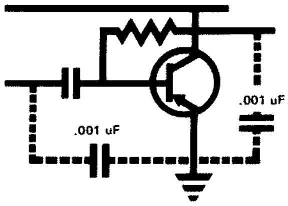

Fig. 18.

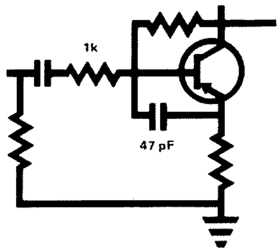

Fig. 19.

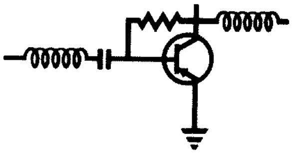

1.5 mH – up to 20 MHz
500 uH – 20 to 50 MHz
100 uH – 50 to 500 MHz

Fig. 20.

phone, the corners of the plastic container will have to be removed. If the phone is too small for the inductor (e.g., the "Princess" telephone), then a pair of 2.5 mH chokes (75 mA or higher) must be installed inside the phone, one on each side of the line and as close to the 211A equalizing network as possible.

Note: The information provided here applies primarily to privately-owned equipment and should not be applied to equipment owned by the telephone company. Telephone company-owned equipment should be modified only by telephone company personnel. Bell System personnel can obtain additional data in Section 500-150-100 of the "Bell System Practices – Plant Series" manual.

RADIO TRANSMITTER OPERATOR GUIDELINES

Resolution Of Interference For Radio Transmitter Operators

Although some inter-

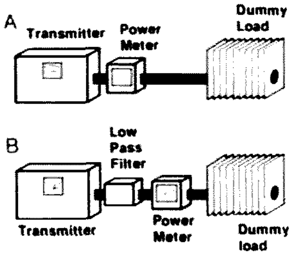

Fig. 21.

ference problems can be attributed to television receivers, such problems can also be traced to CB radio transmitters. Therefore, upon receipt of an interference complaint from your neighbor(s), you should take all steps possible to insure that your radio transmitter is not causing the interference. Voluntary installation of a low pass filter, or other steps as outlined below, may eliminate the interference, and may prevent you from receiving an order from the Commission to implement these measures. You are not, however, required to service or add filtering to the complainant's television, and should not take any such action without the full cooperation of your neighbors.

You are cautioned that the use of an amateur transceiver on the Citizens Band is illegal. Further, the use of external rf power amplifiers with CB transceivers is illegal. Both actions may subject you to Commission actions or criminal penalties.

Generally, transmitter equipment that is commercially manufactured and type-accepted by the Commission has precautions built into the set to reduce harmonic radiation. Harmonics are radiations that are multiples of the operating frequency. However, you should follow the steps outlined below to insure that your radio equipment is operating properly.

1. If television interference is occurring, note which channels are affected.

a. Lower harmonics of CB generally affect TV channels 2, 5, 6, and 9. Therefore, if one or more of these channels is affected, your transmitter is probably radiating harmonics.

b. If all TV channels are affected, the problem is more likely to be in the TV receiver.

2. If the interference is caused by harmonics, a spectrum analyzer, calibrated field intensity meter, or frequency selective voltmeter can be used to accurately measure harmonic and spurious radiations from your transmitter. If any lead-in devices, such as standing wave ratio (swr) meters are used, measurements should be made with the inline device both installed and removed. This may help identify the interference and lead you to the source. These are complex measurements and should normally be made only by experienced technicians.

3. If it appears that your transmitter is at fault, you should first make sure the chassis of the set is secured to the metal case of the radio by tightening the screws holding the chassis and case together. Then assure that the case of the transmitter is grounded to a good earth ground (metallic cold water pipe or 8 foot ground rod). Solid conductor wire (of at least #10 gauge) or copper ribbon should be used as a ground lead. The lead should be as short as possible.

4. By installing one or more low pass filters in the transmitter antenna lead, you will reduce the chances of unnecessary harmonic radiation. A low pass filter allows frequencies up to 30 or 50 megahertz (MHz), depending on brand, to pass through unattenuated to the antenna while effectively shorting out harmonic radiation. To make this test, connect the equipment as in Fig. 21 and take a power reading. If only an swr bridge is available, calibrate it in the forward direction to the calibrate line in the meter. Then insert the low pass filter and make another power measurement. *Do not* retune the transmitter.

5. If you notice a decrease in output power on a power meter, operating to a properly matched load with the low pass filter installed, this is an indication that harmonic content may be present. Even though the meter reading may be lower with the filter installed, it does not mean that the transmitter absolutely has harmonic radiation. Slight detuning of the transmitter by the filter may cause a lower indication.

6. At amateur power levels, corroded metal connections in the area of the transmitting antenna may act like diodes and generate harmonics which may radiate. This type of problem can be found by vibrating suspected offenders such as galvanized downspouts, metal fences, clotheslines, etc., while viewing the affected television set. Sudden changes in the interference pattern which correspond to the vibration should be noted. This test requires an observer at the TV receiver, someone to "shake" suspicious metal objects in the area, and another person to key (but *not* modulate) the transmitter involved.

7. Finally, some transmitters may actually be radiating harmonic and spurious energy from their cabinet or through the power lines. Try operating the transmitter into a shielded dummy load. If the interference is still present, then cabinet or power line radiation is indicated. A power line filter should be installed. Several types are commercially available. For low power transmitters, the filter in Fig. 5 may be used.

8. Continued interference with the power line filter installed points toward cabinet radiation. An earth ground should eliminate cabinet radiation.

9. Local television interference (TVI) committees dedicated to resolving CB-TVI problems now are being established. For assistance in locating a TVI committee in your area, contact: International CB Radio Operators Association (CBA), PO Box 1020, Roanoke VA 24005.

Resolution Of Interference For Amateur Transmitter Operators

1. If you have a linear amplifier on your amateur transmitting equipment, use two low pass filters. One filter should be installed between the actual transmitter (exciter) and the input to the linear amplifier. (This prevents harmonics generated in the exciter from reaching the linear amplifier.) The second filter should be installed at the output of the linear amplifier to reduce harmonic and spurious content.

2. One unique interference problem to TV channel 2 is from an amateur transmitter operating on the 6 meter band. This is due to the close proximity of the frequencies involved. You may wish to follow the procedures outlined in the Technical Information For Service Representatives section to eliminate this type of interference. You are not, however, required to service or add filtering to the complainant's television, and should not take any such action without the full cooperation of your neighbor.

3. Local television interference (TVI) committees are available to assist you in resolving interference problems. Contact the nearest FCC district office (see addresses in Appendix B) or the American Radio Relay League, Newington, Connecticut, for assistance in locating a TVI committee in your area.

Radio Transmitter Operator Guidelines For Resolving Audio Interference

Although audio inter-

ference (often called audio rectification) is usually resolved by modification of the affected device, you as a radio operator can take certain steps to reduce the possibility of audio rectification by eliminating circulating radio frequency (rf) currents in grounds and metal objects in the area.

1. Your radio transmitting equipment should be effectively grounded to a metallic cold water pipe or a ground rod driven into the ground at least 8 feet. The ground lead must be at least #10 wire or copper ribbon. The greater the surface area of the ground lead, the more effective it will be. Also, the ground lead should be as short as possible.

2. You are reminded that you are licensed to use only the amount of power necessary to establish communications. Operating with excessive power is likely to cause audio interference problems.

3. If you need assistance in performing the above modifications to your equipment, you can contact the dealer or manufacturer representatives. Also, an FCC-licensed service representative may be able to assist you. ■

References

1. *The Audio Cyclopedia,* Howard M. Tremline, Howard W. Sams and Co., Inc.
2. *Radio Handbook,* William I. Orr, Editors and Engineers, Ltd.
3. *The Radio Amateur's Handbook,* American Radio Relay League.
4. *Thomas Tech-Flash,* Thomas Organ Co., Sepulveda, California.
5. "Filtering RF Interference in Audio Equipment," R. S. MacCollister, *Journal of the Audio Engineering Society,* April, 1968, pages 210, 212, 214.
6. "Stopping Telephone Interference," Irvin M. Hoff, *QST,* March, 1968, pages 46-47.

APPENDIX A

Sources For Assistance In Resolving Television Interference

If you have followed the instructions outlined in this article and the problem still exists, you may want to contact one of the sources listed below for assistance and further information.

When contacting these people, please forward with your request the information requested in Appendix C.

In most cases, the addresses listed for associations and manufacturers are for national headquarters. Once your inquiry is received, it will be sent to the local representative for response.

The assistance of FCC district office staff is also available to you. If you have taken all the steps suggested in this article and the problem still exists, there may be something unique to your interference problem. By furnishing the information requested in Appendix C to your nearest FCC district office, an FCC staff member may be able to determine what additional steps are needed to resolve your interference problem.

Associations

Director of Consumer Affairs
Electronic Industries Association (EIA)
2001 Eyo Straot, NW.
Washington, D.C. 20000
Telephone: 202 457-4000

Manufacturer Service Representatives

(The information contained in this listing has been supplied by the American Radio Relay League (ARRL), Newington, Connecticut.)

Institutional Listing

Admiral

Admiral Group
Rockwell International Corp.
1701 East Woodfield Road
Schaumburg, IL 60172

Primary Products Distributed and Remarks:

RFI complaints are usually handled by the local Admiral dealer service technician. National Service personnel are available to assist the technician when needed. Admiral maintains its own staff of technical representatives who travel in the field and may be called upon to assist the dealer technician with difficult problems including RFI. Admiral provides technicians with various instruction bulletins dealing with RF interference suppression. RFI complaints should be referred to the local Admiral dealer. If front end overload or cross modulation occurs in areas of extremely high level of transmitter radiation, the National Services Division has suitable traps available at no charge to the customer:

National Service Division
Box 2845
Bloomington, IL 60701

Akai

Akai America, Ltd.
2139 E. Del Amo Blvd
Compton, CA 90220

Primary Products Distributed and Remarks:

Akai products include audio tape recorders, video tape recorder, AM/FM receivers, speaker systems and related accessory products. Inquiries related to RFI should be addressed to:

Akai America, Ltd
Customer Service Dept.
2139 E. Del Amo Blvd.
Compton, CA 90229

Upon receipt of these inquiries, we will investigate the situation, and to our utmost try to resolve the customer's problems.

Allen Organ Company

Macungie, PA 18162

Primary Products Distributed and Remarks:

Electronic Organs. When a complaint is received via the dealer, Allen Organ Co. sends the dealer an informational service bulletin on RFI and sufficient components to cover all amplifiers in the affected instrument. This service is offered at no cost to the customer. Refer RFI problems to the local Allen dealer.

Altec Lansing

Sound Products Division
1515 S. Manchester Avenue
Anaheim, CA 92803

Primary Products Distributed and Remarks

Customer RFI problems are referred to the local authorized Altec Warranty stations located nationwide and denoted by an information card furnished with each piece of equipment. Unusual situations are, at the option of the warranty station, referred to:

Altec Customer Service
1515 W. Katella Avenue
Anaheim, CA 92803

Or:

Engineering Department
1515 S. Manchester Avenue
Anaheim, CA 92803
Attention: Chief Engineer, Electronics

Arvin Industries, Inc.

15th Street
Columbus, Indiana 47201

Primary Products Distributed and Remarks

Radios—8 Track Players

Customer problems involving RFI should be referred to the Manager of Field Service.

Audio Research Corporation

2843 Twenty-Sixth Avenue, S.
Minneapolis, Minnesota 55406

Primary Products Distributed and Remarks

Amplifiers—Pre-Amplifiers + Accessories

In the event of an RFI problem, customer may write to

Chief Engineer
Audio Research Corp.
Box 6003
Minneapolis, MN 55406

Baldwin Piano & Organ Company

1801 Gilbert Avenue
Cincinnati, Ohio 45202

Primary Products Distributed and Remarks

Electronic Organs

RFI complaints are usually handled by the local Baldwin service technician. Factory personnel are available to assist the technician when needed. Baldwin maintains its own staff of technical representatives who travel in the field and may be called upon to assist the dealer technician with difficult problems, including RFI. Baldwin provides technicians with a detailed instruction bulletin entitled "Hints on Suppressing RF Interference"

RFI complaints should be referred to the local Baldwin dealer.

Benjamin Electronic Sound Company

790 Park Avenue
Huntington, NY 11743

Primary Products Distributed and Remarks

Manufacturers and distributors of ELAC Miracord record changers, Concord AM/FM receivers and CEC manual turntables.

RFI problems should be directed to the Service Manager in Huntington. Price of required modifications will depend upon equipment warranty status.

Capehart Corporation

5th Street
Norwich, Connecticut 06360

Primary Products Distributed and Remarks

Stereo Console Phonographs and Radios

Capehart Corp. asks that if an RFI problem develops in their product, the customer refer the matter to the attention of the General Manager.

Conn Organ Corporation

1101 East Beardsley Ave.
Elkhart, Indiana 46514

Primary Products Distributed and Remarks

Electronic Organs

RFI complaints should be referred to the local Conn dealer, whether equipment is in or out of warrantee. Factory assistance is available to the dealer if he is unable to correct the problem.

RFI problems encountered within term of instrument warrantee are usually corrected by the selling dealer without cost to the organ owner.

Curtis Mathes Manufacturing Co.

P. O. Box 151
Athens, Texas 75751

Primary Products Distributed and Remarks

Color TV; Stereo (100% solid state) in portable, consol, and combination configurations.

Customer complaints involving RFI should first be resolved at the retail dealer level. If not satisfied, then complaint should be made in writing to the Consumer Relations Department, giving all details of problem, along with model, serial number, date of sale, dealer, and service history. Each complaint will be handled individually.

Dumont

(See Capehart Corporation)

Dynaco-Dynakit Division of Tyco Laboratories

Coles Road
P. O. Box 88
Blackwood, New Jersey 08012

Primary Products Distributed and Remarks

Amplifiers, Pre-Amplifiers, Tuners, Integrated Amplifiers, and Kits.

Inquiries related to RFI involving Dynaco products should be addressed to the Customer Service Department.

Dyneco has available for owners of Dynakits an excellent information sheet on solving RFI problems.

Elpa Marketing Industries, Inc.

Thorens Building
New Hyde Park, N.Y. 11040

Primary Products Distributed and Remarks

Thorens turntables, Reel-to-Reel tape recorders.

Complaints are handled with respect to parts and labor on an individual basis. Necessary modifications for RFI are made on a no-charge basis, parts and labor, during the term of instrument warrantee. Beyond warantee, modification parts are available free of charge. Customer then pays for labor involved in the installation of the parts.

Emerson Quiet Kool Company

16th & Coles Streets
Jersey City, New Jersey 07302

Primary Products Distributed and Remarks

Televisions, Radios and Recorders

Customer should refer RFI problems or inquiries related to Emerson or Dumont products to the National Service Manager for special handling.

Fisher Corporation

21314 Lassen Street
Chatsworth, CA 91311

Primary Products Distributed and Remarks

Fisher Corp. asks that RFI problems involving Fisher products be handled by reference to one of the following:

1. Request assistance from the local selling dealer;
2. Request assistance from the local Fisher Authorized Service Station (a list is packed with every Fisher unit);
3. Contact Fisher Service Coordination Group

Fisher's Service Coordination Group maintains close communications with Fisher Authorized Service Stations and engineering departments, and works under the supervision of the National Service Manager.

Garrard Plessey Consumer Products
100 Commercial Street
Plainview, L.I., New York 11803

Primary Products Distributed and Remarks

Garrard Single Play and Multiple Play Automatic Turntables.

Garrard advises the consumer on methods which may eliminate RFI. In unique cases where the suggestions are ineffective, customer should refer the RFI problem to the Assistant Service Manager. Any RFI problems which are referred to Garrard are always handled on a no-charge basis.

General Electric Company
Television Business Department
College Blvd.
Portsmouth, VA 23705

Primary Products Distributed and Remarks

GE Television Receivers

RFI problems should be referred to the nearest GE Customer Care Service Operation. If GE Customer Care Service is unable to correct the RFI, the customer should refer the problem to the Television Business Dept. Attention: Manager, Product Service

GE Radios, Record Players and other Audio Products

All RFI problems involving audio products should be referred to:

Manager, Customer Services,
Audio Electronics Department
Electronics Park
Syracuse, New York 13201

Gulbransen
A Division of CBS, Inc.
8501 West Higgins Road
Chicago, Illinois 60631

Primary Products Distributed and Remarks

Electronic Organs

Gulbransen cooperates with dealers and customers in offering suggested RFI solutions. Gulbransen does not reimburse the consumer for servicing. However, when extreme cases are encountered due to proximity of the transmitter and relative power, the dealer may sometimes absorb the cost of servicing RFI problems.

Customers should refer RFI problems to the local dealer. Inquiries may be directed to the Customer Service Supervisor.

Hammond Organ Company
11700 Copenhagen Court
Franklin Park, Illinois 60131

Primary Products Distributed and Remarks

Organs.

Hammond maintains a staff of Technical Service Representatives who become directly involved in RFI cases that the dealer's service personnel are unable to solve. Hammond states that the services of engineering and technical field service departments under its control are provided to consumer and dealer alike without charge whether or not a product is within warrantee.

RFI problems should be referred to the local Hammond dealer.

The Hammond Technical Service Department asks that it be informed of any unique interference problem involving the Hammond instrument.

Harman-Kardon, Inc.
Subsidiary of Jervis Corp.
55 Ames Court
Plainview, New York 11803

Primary Products Distributed and Remarks

Receivers, Amplifiers, Turntables, AM/FM Tuners, Preamps, Record Players, Tape Recorders

Customers should refer RFI problems to the Manager of Customer Service.

Customer RFI problems are handled on an individual basis. If local, the customer is invited to bring the affected set into the plan. Non-local customers are referred to the nearest warranty station. Corrective action is provided at no cost to the customer.

Heath Schlumberger Company
Benton Harbor, MI 49022

Primary Products Distributed and Remarks

AM/FM Radio, Television, Audio Systems (Kits), Transmitter Kits

Heath Company suggests that for fastest service on matters related to RFI, regardless of the product involved customers may now reach the Technical Consultation Department by either writing directly to that department or by using a new direct line telephone system to the department (616) 982-3302. DO NOT write to an individual.

Hitachi Sales Corporation of America
401 W. Artesia Boulevard
Compton, California 90220

Primary Products
Distributed and Remarks

Televisions, Radios, Tape Products.

Customers with RFI problems should contact the service manager of the nearest regional office.

Western Regional Office
401 W. Artesia Blvd.
Compton, CA 90220

Mid-Eastern Regional Office
1400 Morse Avenue
Elk Grove Village, IL 60007

Mid-Western Regional Office
World Trade Center, 183
2050 Stemmons Freeway
Dallas, Texas 75207

J.C. Penny Company, Inc.
1301 Avenue of the Americas
New York, New York 10019

Primary Products
Distributed and Remarks

J.C. Penny Company asks that customers with RFI problems contact their nearest J.C. Penny store for personal assistance.

JVC America, Inc.
50-35 56th Road
Maspeth, New York 11378

Primary Products
Distributed and Remarks

Amplifiers, Tuners, Receivers, Televisions.

Inquiries related to RFI involving JVC products may be referred to the office of the Chief Engineer.

Kenwood Electronics, Inc.
15777 South Broadway
Gardena, California 90248

Primary Products
Distributed and Remarks

Receivers, Tuners, Amplifiers, Turntables.

Kenwood asks that customers with RFI problems take the affected unit to an authorized service center where adjustments will be made at no cost to the customer if the product is properly registered with Kenwood and within warrantee. It is suggested that prior authorization for the return be obtained from Kenwood.

KLH Research and Development Corporation
30 Cross Street
Cambridge, Mass. 02139

Primary Products
Distributed and Remarks

Radio Receivers, Turntables, Music Systems.

KLH initially provides the customer with a listing of suggested steps for isolating and correcting RFI. If self-help does not resolve the problem, the customer may write to the Manager, Customer Service for authorization to return the affected unit to the factory. Return can then be made through contact with the nearest KLH factory authorized service station.

KLH absorbs the cost of service for units returned to the factory for any RFI problem. Customer bears the responsibility for shipping the unit to and from the repairing service station.

Lafayette Radio Electronics Corporation
111 Jericho Turnpike
Syosset, L.I., New York 11791

Primary Products
Distributed and Remarks

AM/FM radio, Home Entertainment Audio Products.

Customers should refer RFI problems involving Lafayette products to the local dealer. If the dealer cannot alleviate the problem, the customer may contact the Vice President, Engineering.

Magnavox Consumer Electronics Company
1700 Magnavox Way
Fort Wayne, Indiana 46804

Primary Products
Distributed and Remarks

Televisions, Multi-Channel Receivers, Record Changers.

Customers should direct RFI problems involving Magnavox products to the nearest of the nine Magnavox service offices.

Pacific Division
1360 San Mateo Avenue
So. San Francisco, CA 94080

Los Angeles Division
2645 Maricopa Street
Torrance, CA 90503

Southwestern Division
8813 John Carpenter Highway
Dallas, Texas 75247

Great Plains Division
7510 Frontage Road
Skokie, Illinois 60076

Great Lakes Division
24092 Detroit Road
Westlake, Ohio 44145

Southeastern Division
1898 Leland Drive
Marietta, Georgia 30062

Northeastern Division
607 North Avenue, Door 17
Wakefield, Mass. 01880

New York Division
161 East Union Avenue
East Rutherford, N.J. 07073

Mid-Atlantic Division
2201 Route 38, Suite 750
Cherry Hill, N.J. 08034

MDA Mitsubishi Electric Corporation
Melco Sales, Inc.
3030 East Victoria Street
Compton, California 90221

Primary Products
Distributed and Remarks

Melco Sales, Inc. is the sales and service representative for the Mitsubishi Electric Corporation.

RFI reports from the field, beyond the dealers capability to resolve, in which Melco Sales becomes involved, are handled on an individual basis. All attempts will be made to give customer satisfaction.

Melco Sales suggests that requests for assistance be addressed to its Compton, CA address, or the Service Department may be contacted by telephone on a toll free number (800) 421-1132. Ask for the National Service Manager.

Midland International Corporation
Consumer Products Division
P. O. Box 1903
Kansas City, Missouri 64141

Primary Products
Distributed and Remarks

Portable Black and White and Color Television Receivers.

Midland asks that, should any RFI problems be encountered with the Midland product, individuals should *write the General Services Manager or call (816) 842-0511.*

Montgomery Ward
Corporate Offices
535 West Chicago Avenue
P. O. Box 8339
Chicago, Illinois 60680

Primary Products
Distributed and Remarks

Televisions, Radios, Audio Products.

Service for RFI should be obtained from the nearest Montgomery Ward location. If service is not obtainable locally, customer may write to the Customer Service Product Manager at the Corporate Offices. The Montgomery Ward field service organization can call upon factory and corporate engineering talent for assistance with difficult RFI problems.

Marantz

(See Superscope)

Nikko Electric Corporation of America
16270 Raymer Street
Van Nuys, CA 91406

Primary Products
Distributed and Remarks

Stereo receivers, Tuners and Amplifiers, Combination Preamp, Main amp pairs.

For information and assistance with any Nikko Electric products, inquiries should be made to the Service Department, Attention: National Service Manager.

Norlin Music, Inc.
737 North Cicero Avenue
Lincolnwood, Illinois 60646

Primary Products
Distributed and Remarks

Lowrey Electronic Organs.

Norlin offers local service organizations technical help in treating RFI through the Norlin Service Manager.

Customers should refer RFI problems to the local Lowrey dealer.

North American Phillips Corporation
100 E. 42nd Street
New York, New York 10017

Primary Products
Distributed and Remarks

Each RFI situation is handled individually by the Service Manager of the particular division whose product is involved. Inquiries related to RFI should be addressed to the proper division of North American Phillips Corporation.

Nutone Division

Scovill Housing Products Group
Madison & Red Bank Roads
Cincinnati, Ohio 45227

Primary Products
Distributed and Remarks

Radios, Intercoms, AM radios.

Refer RFI problems to Consumer Relations Department for handling.

Panasonic Company
Division of Matsushita Electric
Corporation of America
50 Meadowlands Parkway
Secaucus, New Jersey 07094

Primary Products
Distributed and Remarks

When instances of RFI occur, the customer should contact Panasonic in Secaucus.

Customers should provide model number, serial number and information concerning the problem. Upon review, the customer will be contacted advising them where to return their unit for corrective repair. Panasonic will absorb both parts and labor costs in these instances.

Philco (Television)

(See GTE Sylvania)

Quasar Electronics Corporation
9401 West Grand Avenue
Franklin Park, Illinois 60131
Attention: Consumer Relations Manager

Primary Products
Distributed and Remarks

For a high-pass filter, consumer should write Quasar and should include model and serial number of the receiver, frequency of the interference signal (if known), and whether sound or picture, or both, are affected. The Quasar distributor serving the local area should be contacted relative to any other interference problem that is unique to Quasar products.

Radio Shack
National Headquarters
2617 West Seventh Street
Fort Worth, Texas 76107

Primary Products
Distributed and Remarks

AM/FM Radios, Home Entertainment Audio Products.

Customers who encounter unique interference problems involving Radio Shack audio products may write to the Product Development Manager or the National Quality Control Manager.

RCA Consumer Electronics
800 N. Sherman Drive
Indianapolis, Indiana 46201

Primary Products
Distributed and Remarks

RFI problems involving both television and audio products may be referred to RCA Consumer Electronics 1-455.

Requests for filters should include model and serial number of the equipment. Filter installation charges will be the customer's responsibility.

Rodgers Organ Company
1300 N. East 25th Avenue
Hillsboro, Oregon 97223

Primary Products
Distributed and Remarks

RFI problems involving the Rodgers Organ may be referred to Custom Organ Test Dept.

Sansui Electronics Corporation
201 East 42nd Street
New York, New York 10017

Primary Products
Distributed and Remarks

RFI problems should be directed to the attention of the Vice President, 201 Communications Inc. (212) 867-3325.

201 Communications, Inc. is the advertising and public relations agency representing Sansui. They will direct the customer to the appropriate Sansui Service Center. They state that all Sansui products are carefully checked prior to final engineering commitments for susceptibility to RFI. Units are often taken to high RF level areas such as New York City to determine any design flaws.

Sanyo Electric, Inc.
Electronics Division
1200 W. Artesia Blvd.
Compton, CA 90220

Primary Products
Distributed and Remarks

In the event an RFI problem should occur, the customer is requested to take the set to the nearest Sanyo Authorized Repair Station.

Transportation to and from the shop is the responsibility of the customer. Should the shop not alleviate the problem, either the customer or the shop should contact the Field Service Manager in Compton (213) 537-5830.

Schober Organ Corporation
43 West 61st Street
New York, New York 10023

Primary Products
Distributed and Remarks

Organ Kits.

Customers with RFI problems are supplied with the necessary parts, free of charge, to correct the trouble.

Schober Organ Corp. also assists customers in location of the offending stages in the organ.

Refer RFI problems to the Development Engineer.

H. H. Scott, Inc.
111 Powder Mill Road
Maynard, Mass. 01754

Primary Products
Distributed and Remarks

Manufacturer and Importer of AM/FM Tuners-Receivers and Stereo Amplifiers used in Hi-Fi Systems.

Manufacturer offers simple instruction sheet to aid customers in resolving problems involving RF pickup. The information includes suggestions about suitable equipment grounding, power line bypassing, and hints and suggestions on how to determine where RF is entering the equipment.

Refer RFI problems to the Engineering Dept.

Scientific Audio Electronics, Inc.
P. O. Box 60271 Terminal Annex
Los Angeles, CA 90060

Primary Products
Distributed and Remarks

Refer all RFI inquiries to the attention of the National Marketing Manager.

Sears Roebuck & Company
BSC-41-03
Sears Tower
Chicago, Illinois 60684

Primary Products
Distributed and Remarks

Televisions, Radios, Audio Products.

Sears asks that customers with an RFI problem involving a Sears product contact the nearest Sears Service Department for assistance.

Sharp Electronics Corporation
10 Keystone Place
Box 588
Paramus, N.J. 07652

Primary Products
Distributed and Remarks

Manufacturer of Television and Radio Receivers.

Sharp Electronics will, with proof of purchase, supply to any TV owner who complains of interference, a Drake TV-300 high-pass filter at no charge. Audio rectification problems are handled on an individual basis by the service department. Refer all Sharp Electronics RFI problems to the Service Department.

Sherwood Electronic Laboratories, Inc.
4300 N. California Avenue
Chicago, Illinois 60618

Primary Products
Distributed and Remarks

Receivers, Amplifiers, Tuners.

Customers with interference problems should contact the Service Laboratory Manager.

Sony Corporation

(See Superscope)

Consumer Audio Tape Products Only.

Shure Brothers, Inc.
222 Hartrey Avenue
Evanston, Illinois 60204

Primary Products
Distributed and Remarks

Microphones and Electronic Components.

Manufacturer recommends the use of balanced line, low impedance microphones, cables. If the RFI problem persists after taking this step, the consumer should contact Shure Brothers with specifics so that they may be able to help solve the problem. Refer RFI problems to Customer Service Manager.

Superscope Corporate Offices
20525 Nordhoff Street
Chatsworth, CA 91311

Primary Products
Distributed and Remarks

Superscope/Marantz AM/FM receivers, tuners, amplifiers, tape recorders, record players, and audio systems.

Sony consumer audio tape products.

In the event of special RFI cases, resulting from extremely high RF fields, contact the Technical Services Department at Superscope Corporate Offices.

Modifications necessary to resolve such RFI problems are provided customers on an individual basis.

GTE Sylvania, Inc.
Entertainment Products Group
Group Headquarters
700 Ellicott Street
Batavia, N.Y. 14020

Primary Products
Distributed and Remarks

Televisions, AM/FM Tuners, Radios, Amplifiers.

Consumers should first contact the dealer. Factory Field Service and Field Engineering personnel work together to solve many of the TVI and Audio Rectification problems. The dealers are in touch with the manufacturer's services that will help resolve the problem. RFI problems are handled on an individual basis.

Sylvania has available for their technicians an excellent pictorial TVI training manual titled, "Diagnosis, Identification and Elimination" of TVI.

Tanberg of America, Inc.
Labriola Court
Armonk, New York 10504

Primary Products
Distributed and Remarks

Recorders.

When RFI occurs in Tanberg products, the manufacturer suggests that the unit be returned to them. "We will do any modification possible to eliminate the RFI."

Prior authorization should be obtained from the Technical Manager prior to return of the unit.

Tenna Corporation
19201 Cranwood Parkway
Cleveland, Ohio 44128

Primary Products
Distributed and Remarks

Tenna Corp. has not produced home entertainment equipment within the past two years, but will be glad to help out all past customers if a problem arises with RFI. Will install a circuit change at no cost except postage and handling. All unique RFI problems may be referred to the National Service Manager.

Thomas Organ Company
7310 North Lehigh Avenue
Chicago, Illinois 60646

Primary Products
Distributed and Remarks

Electronic Organs.

Refer RFI complaints to the dealer. RFI is usually resolved at this level. If the manufacturer's field service is made aware of a consumer complaint regarding RFI, the field service will contact the seller and advise that person on how to eliminate the problem. Should that fail, "we continue to pursue the problem utilizing our own people."

Thomas has six field service engineers. In the event of a call for assistance, an engineer personally contacts the consumer by telephone, makes an appointment to visit the home of the consumer to correct the RFI condition, with or without the dealer's technician. "We do not charge the consumer for this service."

Toshiba America, Inc.
41-06 Delong Street
Flushing, N.Y. 11355

Primary Products
Distributed and Remarks

Televisions, Radios, Tape Products, Amplifiers, Tuners, Receivers.

Customers should contact the nearest Regional Office Service Manager for obtaining assistance in resolving RFI problems.

Eastern Regional Office
41-06 Delong Street
Flushing, N.Y. 11355

Southwest Regional Office
3225 E. Carpenter Freeway
Irving, Texas 75062

Western Regional Office
19515 S. Vermont Avenue
Torrance, CA 90502

U.S. Pioneer Electronics Corp.
75 Oxford Drive
Moonachie, N.J. 07074

Primary Products
Distributed and Remarks

Consumers should contact the nearest Regional Service Manager. Pioneer makes available to their technicians an excellent service manual titled, "Hi-Fi I Countermeasures."

Eastern Regional Office
75 Oxford Drive
Moonachie, N.J. 07074

Midwest Regional Office
1500 Greenleaf Avenue
Elk Grove Village, Illinois

Western Regional Office
13300 South Estrella Avenue
Gardena, California

Yamaha International Corporation
6600 Orangethorpe Avenue
Buena Park, CA 90622

Primary Products
Distributed and Remarks

Electronic Organs

Yamaha organization attempts to cure each RFI problem on an individual basis. Yamaha supplies all necessary technical information at no charge. If interference is due to design error, Yamaha takes steps at its own expense to remedy the problem.

Refer RFI problems to the local dealer. The dealers are kept well informed and current on RFI countermeasures.

Zenith Radio Corporation
11000 Seymour Avenue
Franklin Park, IL 60131

Primary Products
Distributed and Remarks

Televisions, Radios, Audio Systems

Zenith gives consideration to handling and providing relief for RFI problems on a case-by-case basis. RFI problems should be referred to the Service Division.
RFI referrals should include model and serial number of the affected product.

Customers with a unique, difficult RFI problem may direct a letter to the National Service Manager.

APPENDIX B

Addresses Of FCC District Offices

Listed below are the addresses and telephone numbers of the FCC district offices. This list is alphabetical by state, and also includes offices in Puerto Rico and the District of Columbia (Washington DC).

You are reminded that the information requested in Appendix C will be required in order that a staff member may analyze your interference problem. Please forward this information by mail.

ALASKA, Anchorage
U.S. Post Office Building Room G63
4th & G Street, P.O. Box 644
Anchorage, Alaska 99510
Phone: Area Code 907 265-5201

CALIFORNIA, Los Angeles
3711 Long Beach Blvd.
Suite 501
Long Beach, California 90807
Phone: Area Code 213 426-4451

CALIFORNIA, San Diego
Fox Theatre Building
1245 Seventh Avenue
San Diego, California 92101
Phone: Area Code 714 293-5460

CALIFORNIA, San Francisco
323A Customhouse
555 Battery Street
San Francisco, California 94111
Phone: Area Code 415 556-7700

COLORADO, Denver
Suite 2925 Executive Tower
1405 Curtis Street
Denver, Colorado 60202
Phone: Area Code 303 837-4054

DISTRICT OF COLUMBIA (WASHINGTON, D.C.)
1919 M Street N.W. Room 411
Washington, D.C. 20554
Phone: Area Code 202 632-8834

FLORIDA, Miami
919 Federal Building
51 S.W. First Avenue
Miami, Florida 33130
Phone: Area Code 305 350-5541

FLORIDA, Tampa
Barnett Office Bldg., Rm 809
1000 Ashley Drive
Tampa, Florida 33602
Phone: Area Code 813 228-2872

GEORGIA, Atlanta
Room 440, Massell Bldg.
1365 Peachtree St. N.E.
Atlanta, Georgia 30309
Phone: Area Code 404 881-3084

GEORGIA, Savannah
238 Federal Office Bldg. and Courthouse
125 Bull Street, P.O. Box 8004
Savannah, Georgia 31402
Phone: Area Code 912 232-4321 ext. 320

HAWAII, Honolulu
502 Federal Building
P.O. Box 1021
335 Merchant Street
Honolulu, Hawaii 96808
Phone: Area Code 808 546-5640

ILLINOIS, Chicago
3935 Federal Building
230 South Dearborn Street
Chicago, Illinois 60604
Phone: Area Code 312 353-0195

LOUISIANA, New Orleans
829 F. Edward Hebert Federal Bldg.
600 South Street
New Orleans, Louisiana 70130
Phone: Area Code 504 589-2094

MARYLAND, Baltimore
George M. Fallon Federal Building
Room 823 31 Hopkins Plaza
Baltimore, Maryland 21201
Phone: Area Code 301 962-2728

MASSACHUSETTS, Boston
1600 Customhouse
165 State Street
Boston, Massachusetts 02109
Phone: Area Code 617 223-6609

MICHIGAN, Detroit
1054 Federal Building
231 W. Lafayette Street
Detroit, Michigan 48226
Phone: Area Code 313 226-6078

MINNESOTA, St. Paul
691 Federal Building
316 N. Robert Street
St. Paul, Minnesota 55101
Phone: Area Code 612 725-7810

MISSOURI, Kansas City
1703 Federal Building
601 East 12th Street
Kansas City, Missouri 64106
Phone: Area Code 816 374-6155

NEW YORK, Buffalo
1307 Federal Building
111 W. Huron Street at Delaware Ave.
Buffalo, New York 14202
Phone: Area Code 716 842-3216

NEW YORK, New York
201 Varick St.
New York, New York 10014
Phone: Area Code 212 620-3437

OREGON, Portland
1782 Federal Office Bldg.
1220 S.W. 3rd Avenue
Portland, Oregon 97204
Phone: Area Code 503 221-3098

PENNSYLVANIA, Philadelphia
11425 James A. Byrne Federal Courthouse
601 Market Street
Philadelphia, Pennsylvania 19106
Phone: Area Code 215 597-4411

PUERTO RICO, San Juan
U.S. Post Office and Courthouse
Room 323 P.O. Box 2987
San Juan, Puerto Rico 00903
Phone: Area Code 809 753-4567

TEXAS, Beaumont
Room 323, Federal Building
300 Willow Street
Beaumont, Texas 77701
Phone: Area Code 713 838-0271

TEXAS, Dallas
Earle Cabell Federal Bldg.
Room 13E7, 1100 Commerce Street
Dallas, Texas 75242
Phone: Area Code 214 749-1719

TEXAS, Houston
5636 Federal Building
515 Rusk Avenue
Houston, Texas 77002
Phone: Area Code 713 226-5624

VIRGINIA, Norfolk
Military Circle
870 North Military Highway
Norfolk, Virginia 23502
Phone: Area Code 804 461-6472

WASHINGTON, Seattle
3256 Federal Bldg.
915 Second Avenue
Seattle, Washington 98174
Phone: Area Code 206 442-7653

APPENDIX C

In requesting assistance from the association, manufacturer, dealer, or FCC district office, the following information will be helpful in analyzing your problem.

____
Date

1. Your name: ________________
Address: ________________
____
Phone Number: ________________

2. If known, radio transmitter operator's:
Name: ________________
Address: ________________
____
Call Sign: ________________
Hours of Operation: ________________

3. Type of interference identified:
☐ Radio Transmitter ☐ Electrical
☐ Co-Channel ☐ FM
☐ Audio

4. a. TV Channels affected: ________________
____
b. AM/FM Frequencies affected: ________________
____

5. If you are experiencing either FM or Co-Channel interference, estimate the distance of the interfering station from the location of your home: ________(miles).

6. Were suggested home remedies made?
☐ Yes ☐ No
Please explain (be specific): ________________
____
____
____

7. a. Was service representative called:
☐ Yes ☐ No
b. If yes, were suggested modifications made? ☐ Yes ☐ No
Please explain (be specific): ________________
____
____
____
____

8. a. If a radio transmitter is involved, was the operator contacted? ☐ Yes ☐ No
b. If yes, what was the result of that conversation? ________________
____
____
____
c. Were suggested transmitter modifications made? ☐ Yes ☐ No
Please explain (be specific): ________________
____
____

9. At what time of day does the interference usually occur and how long does it last?
____

10. Give Make, Model Number, and the Year Purchased, of your TV or AM/FM receiver. ________________

11. Was the level of interference affected in any way by the modifications suggested in this bulletin? ☐ Yes ☐ No
Comments: ________________
____

12. Describe fully the sound or noise made by the interference and, if the TV picture is affected, please provide a drawing of what the interference pattern looks like. (Use separate sheet.)

13. a. Are any of your neighbors experiencing the same type of interference?
☐ Yes ☐ No
If yes, on a separate sheet, indicate their names, addresses, and type equipment receiving the interference; TV, AM/FM radio, electronic organ, etc.
b. Was the information provided in this bulletin shared with your neighbors?
☐ Yes ☐ No
If yes, please explain what modifications were made to their equipment and if the modifications eliminated or reduced the level of interference. (Use separate sheet if necessary.)
____
____

Hey, Old-Timers! The Breadboard Is Back!

—*jiffy up those IC circuits*

Rod Hallen WA7NEV
P.O. Box 73
Tombstone AZ 85638

Are you afraid of integrated circuits? If so, why? ICs are complex little devils, but wiring them together is simple enough. I used to shy away from IC projects because of the apparent complexity, unless a nice ready-made printed circuit board was available. I felt that way until I found a quick, simple way to copy a circuit out of a magazine or design one of my own. Enter the plug-in breadboard.

This is not a how-it-works piece; this is a how-to-do-it article. There have been many good articles written on how ICs work and what they will do. Look back over the past few years of *73 Magazine* to see what I mean.[1,2,3]

A full-blown schematic of the inner workings of almost any integrated circuit is enough to scare all but the most electronically oriented technician, but you don't have to understand ICs to be able to use them. Consider the black box; you don't know or care what's in the box or how it works. All you need to know is that you get a certain output for a given input – a cause-and-effect relationship. A television receiver can be considered a black box; as long as a valid signal is on the input channel, you will get the audio and video that you want out of the box, even if you don't know how it works.

Look at the integrated circuit in the same manner. It has input and output leads, all well defined. A given input will always give the same output. This article will deal mostly with digital ICs. Look over some of the schematics in recent magazine issues, and compare those built up of digital ICs with those made with transistors or tubes (if you can find tubes still being used). One thing that will be obvious is the almost total lack of supporting components such as resistors and capacitors. Digital circuits, except for the clocks, are composed almost entirely of ICs connected together. Transistors are usually used when it is necessary to drive a larger load than the IC, with its small heat-dissipating capacity, can handle.

A linear IC is more complex in that it compares more with the amplifiers in the tube and transistor layouts. A digital IC is really a bunch of switches, and electronic switches hadn't been used long before ICs came along. The first electronic computers were tube-type. They were very large, very inefficient, and great for heating buildings.

The IC Breadboards

What do you need to put together the circuits you read about in the magazines or the ones you come up with on your own? First you need a means of trying out the design, making changes, and adding a few ideas later. You should be able to do all of this without soldering and unsoldering dozens of connections each time. This is where the IC plug-in breadboard comes in (Photo A).

The boards used here were provided by Continental Specialties Corporation,[4] which manufactures many different models, shapes, and sizes of boards. The QT-series board is of high quality and is

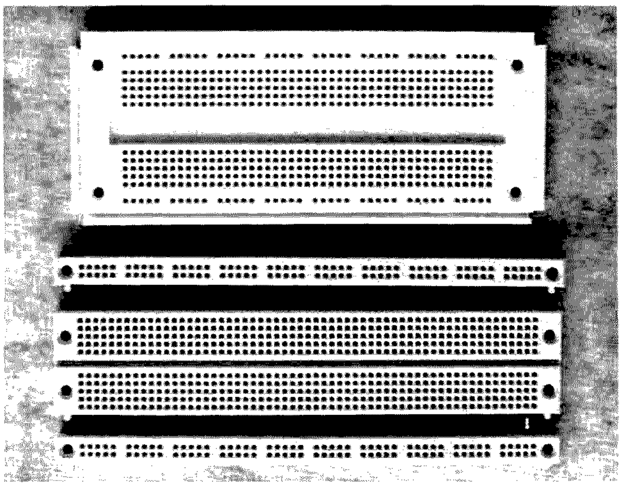

Photo A. IC plug-in breadboards. At the top is the CSC QT-59S flanked by the QT-59B bus strips. At the bottom is the CSC Experimenter 600 board.

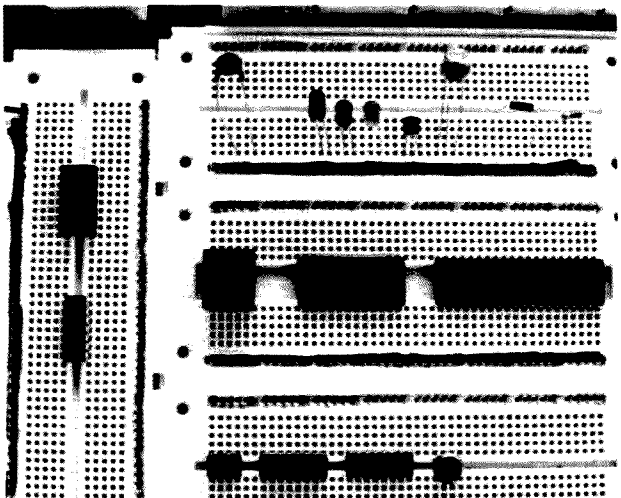

Photo B. Various components mounted on the CSC Experimenter 300 and 600 breadboards.

designed for those who do a great deal of this kind of work. The Experimenter series combines the IC board and the bus strips in one piece. These latter boards are good quality, are lower in price, and are quite suitable for this use.

ICs are plugged in along the center of the board, and short jumpers and components interconnect the pins according to the design schematic. The bus strips are connected to battery and ground and then cross-connected to various points in the circuit, as required. The Experimenter 300 is designed to be used with 14- and 16-pin ICs, and the Experimenter 600 is used with the larger IC packages, such as those with 24 and 40 pins. The large ICs will also work on the 300, but they cover up more of the connectors, allowing fewer jumpers to a given pin.

Other components – transistors, resistors, and capacitors – can be plugged in also and jumpered into the circuit. Each bus strip is one continous series of connections and can be used anywhere along the board. The connector that each IC pin plugs into has 4 additional points that can be used for jumpering (Photo B).

Data Books

The next items you need are data books. Just as tube and transistor manuals give basic information on using these components, data books, put out by the semiconductor manufacturers, cover details on their integrated circuit products. Since all of the major IC fabricators make all of the more popular ICs, the data books from one source will cover just about all that you will need to know. These books come in two principal editions, one for digital ICs and one for linear ICs.

There are also some specialized data books, but these are the two you'll use most. They may be purchased from any of the companies that advertise ICs for sale. Texas Instruments, National Semiconductor, and Fairchild all put out good ones, and the information they contain is well worth the very low price.

These books not only list all of the electrical characteristics of the various ICs, the physical dimensions, and pin connections, but also suggest applications of many types.

The Power Supply

Next you need a power supply or supplies, depending on the needs of the given circuit. A basic requirement is a +5 V dc supply, as all TTL and CMOS digital ICs use this value. Linear ICs use various voltages, both plus and minus. Further on, I'll describe the construction of a supply that will take care of most situations.

Since this supply will have a variable output, you will want some type of voltmeter to set the output voltage each time you use it. A VOM, VTVM, or similar meter will serve this function, but I chose to dedicate a meter to do this in order to have a continuous readout. I think that this is the best way, and I'll show you how to use just about any meter you can get your hands on to do the job.

The Logic Probe

And, last but not least, you'll need a logic probe. I said earlier that a digital IC is nothing more than a bunch of switches. A logic probe will tell whether these switches are operated (high) or unoperated (low). If a switch is operated, you should see about +5 volts on its output, and, if it is unoperated, you should see ground. A VOM or VTVM will obviously give this information, but a logic probe is easier and more convenient to use. I'll discuss how to build one of these before I'm through.

You will, of course, need a selection of ICs to work with. All of the components, except the transformer and the meter, used in this article were purchased from James Electronics.[5] I deal with them because their service is

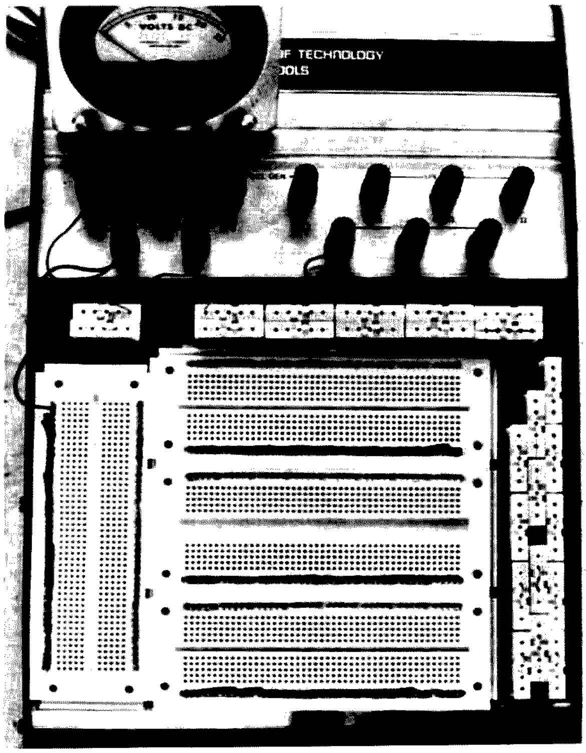

Photo C. The breadboards attached to the front of the modified Bell and Howell design console.

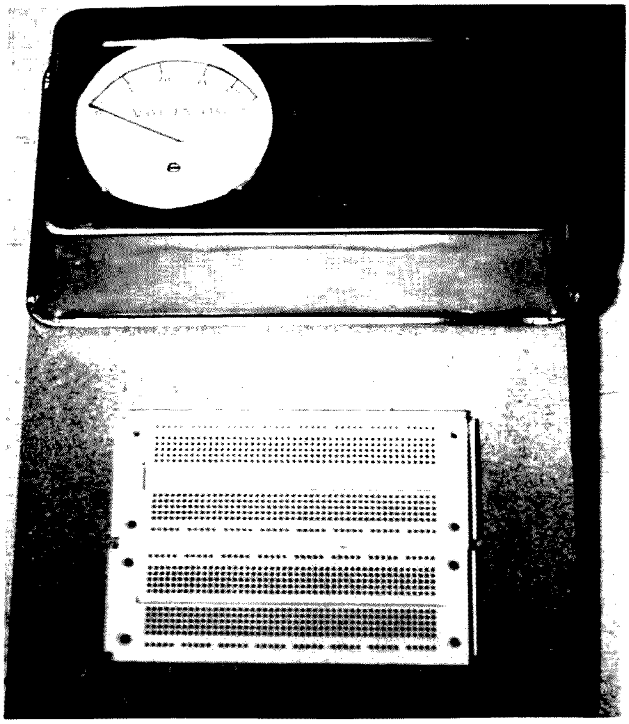

Photo D. Every breadboard needs a bread pan. Here is a bread pan used instead of a metal chassis. The bread pan is cheaper and easier to work with.

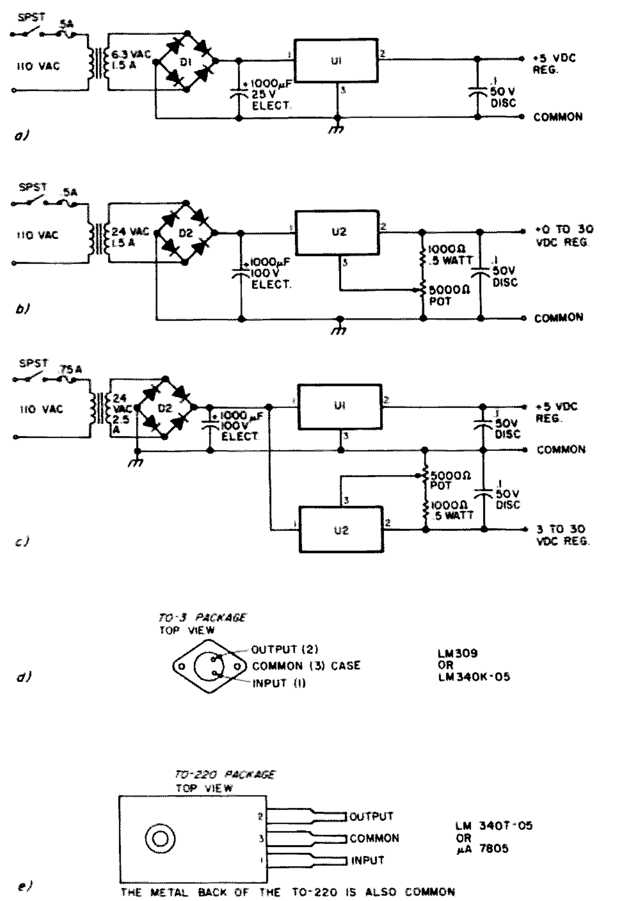

Fig. 1. (a) A 5-volt, 1-Ampere regulated power supply; (b) A 0- to 30-volt, 1-Ampere regulated power supply; (c) A combination of (a) and (b); (d) and (e) show the connections for the TO-3 and TO-220 regulator packages. D1 — four 1-Amp, 50-volt diodes or equivalent diode bridge; D2 — four 2-Amp, 100-volt diodes or equivalent diode bridge; U1, U2 — LM340T-05, LM340K-05, LM309K, or 7805 regulator.

outstanding. I have never waited more than 7 days for any merchandise, and I have always received everything exactly as ordered. Having had many unpleasant experiences, both in and out of the electronics field, with mail-order firms, I can recommend this company very highly.

Putting It All Together

I mounted my breadboards with double-sided tape on a design console (Photo C) which came as part of a Bell and Howell electronics correspondence course. After I jumpered to the wrong bus a few times, I marked the positive bus red and the ground bus black with wide felt-tip markers. The console came with plug-in connectors, which were used as the Bell and Howell method of breadboarding, but they are much too large for ICs.

The console contains a 0- to 30-volt variable supply, a tunable sine and square wave audio oscillator, filament and high-voltage supplies for tube circuits, and a speaker. I modified some of its features to fit in with my IC designing interests. I left the variable supply as it was, but I mounted a 0- to 25-volt dc meter on top and wired it to give a continuous readout. I used the 6.3-volt filament winding to power a +5 V dc regulated supply. The LEDs of a logic probe are mounted into the top of the meter bracket.

Since you probably don't have a console like this, why not build one? You can use a metal chassis about 9" x 12" x 3" turned upside down or a piece of wood about 9" x 12" x 1". If you choose the latter, a smaller 5" x 9" x 3" chassis can be mounted on the rear of the wood to house the electronics. Since you're concerned with breadboarding, a small bread pan could serve this purpose (Photo D). In either case, the breadboards can be mounted with double-sided tape or permanently attached with screws. Put rubber feet or tape on the bottom of the chassis to keep it from scratching the furniture, especially if you have to work on the dining room table. A piece of cloth glued to the bottom of the wooden version would serve as well.

Build your supplies on the breadboard, and then mount them on the chassis. Fig. 1(a) is a +5 V dc regulated supply. Fig. 1(b) is a supply that varies from 3 to 30 V dc depending on the position of the 5k pot, and Fig. 1(c) simplifies the whole setup by combining both of them into one (Photo E).

All four regulators listed for U1 and U2 will put out up to one Ampere regulated. If the output is shorted, too much current is drawn, or the regulator overheats, it will shut itself down. It is therefore almost impossible to damage it. All of these regulators automatically ground the common (#3) terminal when they are attached to a metal chassis or heat sink. See Fig. 1(d) or 1(e). This is okay in most cases, such as U1 in Fig. 1(a) or 1(c), but, when the common terminal is floated above ground, as U2 is in Fig. 1(b) or 1(c), it must be insulated from the heat sink. In this instance, the common terminal is brought to the wiper of the 5k pot.

After testing the supply to be sure it is going to work, transfer all of the components from the breadboard to the chassis. Heat sinks and silicone grease should definitely be used if you hope to draw the full rated current. The heat sinks should be mounted outside the chassis so that air can circulate around them. Point-to-point wiring can be used, and the layout is not critical. Attach the diode bridge to the side of the chassis. Put the regulators on the back wall with lugs under the grounded mounting screws, and run all of the grounded components to the lugs. Combination banana plug/binding posts are great for connecting from the supply to the breadboard bus strips. Use your VOM or VTVM to check the output voltages of both supplies. If you don't get a solid +5 V dc from the fixed supply and about 3 to 30 V dc from your variable supply, check your wiring again. The maximum voltage from the variable supply will depend on the voltage of your transformer. Please note that any of the supplies shown in Fig. 1 can be made into negative supplies by grounding the positive output and connecting all of the grounded connections together but not grounding them. The point marked common on the schematic then becomes your negative output.

The Voltmeter

The built-in voltmeter can be just about any meter you have lying around, or an inexpensive one can be purchased. In junking out some old carrier equipment recently, I came up with ten 0 to 10 milliammeters. Just to show how versatile meters can be, I have modified one of these to measure 0 to 120 mills so that I can monitor the current in my Teletype® loop. Another reads 0 to 100 Amperes and is inserted in my 12 V dc battery system. (My HF-VHF-UHF ham station is all battery powered, but that's another story.) Yet another watches my battery voltage and the charger that keeps the battery up.

Obviously then, a meter

can be made to measure ranges other than the one it was designed for. A meter gives an indication of the amount of current flowing through it, and, if you put a resistance in series with it, you can control the amount of current that flows for a given voltage. That is Ohm's law. See Fig. 2(a).

Suppose that you want a meter that will read 0 to 25 V dc, such as I used with my design console. There are formulas that you can use to find the series resistance needed for a given voltage reading, but they require that you know the internal resistance of the meter. Finding that internal resistance is tricky – you can't just measure it with an ohmmeter. Please don't try it – you might ruin the meter, and it isn't necessary anyhow.

There is an easy way. I put my VOM across the output of the variable supply and the meter I want to use in series with a 5000-Ohm variable resistor in parallel with the VOM. See Fig. 2(b). Then I set the supply for 25 V dc as read on the VOM, adjust the pot until the meter reads full scale, and I've got a 0 to 25 V dc voltmeter. If I drop the supply voltage until the VOM reads 12½ volts, the meter should read half scale. Next I disconnect the 5k pot, measure the resistance I've set into it, and find a fixed value to replace it. Mine turned out to be pretty close to 1500 Ohms, and I put a 1000-Ohm resistor and a 510-Ohm resistor in series. The meter with the series resistor or resistors is connected permanently across the variable supply, and you've freed your VOM for other chores.

The reason I chose 25 volts full scale, even though the supply puts out more than that, is because that makes each mark on the scale equal to ¼ volt. If I had set it up to read 0 to 50 volts, for instance, each mark would have been ½ volt, making for less accurate settings. You seldom need more than 25 volts anyway.

In order to be able to read the meter easily, I removed the case and painted over the old numerals and lettering with flat white paint. When the paint was dry, I renumbered the scale 0 to 25 in 5-volt steps and wrote "volts dc" below it. I used rub-on transfers for this job, but a small artist's brush and black paint or a fine-tip felt marking pen would do a good job if you're careful.

The Logic Probe

Now the logic probe – as I said earlier, you need a way of determining what is happening in a digital logic circuit. If you are building a two meter scanner, for instance, and it doesn't work, you can use the probe to find out where you are going wrong.

If you touch the probe of Fig. 3(a) to a point in the circuit that is at +5 V dc (high), the LED will light, but, if the point is low, the LED will not light. If you have a pulsing battery at that point, the LED will pulse. It's a good logic probe, yes? No! If you touch the probe to a point that is open (no battery or ground), the LED will not light, indicating a ground where there is not one. Fig. 3(b) is the opposite situation – light if you touch ground and no light if you touch an open or battery. That's still not good enough. Figs. 3(c) and 3(d) combine both conditions, so one LED or the other will light up when you are probing, and an open will give no indication. A pulsing battery and ground will light the LEDs alternately. The 7400 NAND gate, which is wired as an inverter, and the 7404 inverter prevent the battery flowing through one LED from lighting the other LED falsely.

Build up 3(c) or 3(d) on your breadboard (Photo F). Fig. 3(e) shows the battery and ground connection for either IC. Try probing the battery and ground outputs of your power supply, and

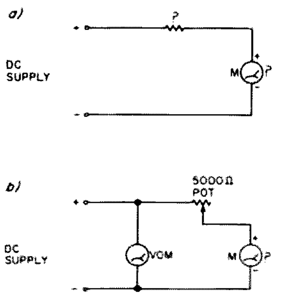

Fig. 2. (a) A milliammeter used to measure voltage; (b) this shows how to determine the value of series resistance needed for a given full-scale reading.

see which LED lights for each. A distinctive display, one that is easier to interpret, is made by using a green LED for a high indication and a red LED to indicate a low condition. Don't forget that LEDs are diodes and must be biased in a forward direction. On all of the LEDs I've seen, that means the shorter lead toward the battery (positive) and the longer lead toward ground.

Now you'll want to take the logic probe components off the breadboard and build them permanently into your power supply chassis. For a simple circuit like this, I think the easiest way to put it together is to mount the IC on its back in a convenient place with a little glue and wire directly to its pins. I put

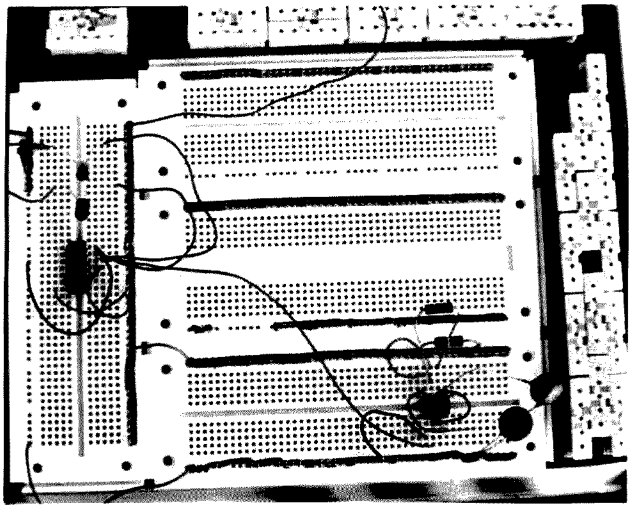

Photo E. Fig. 1(c) as it looks built up on the boards.

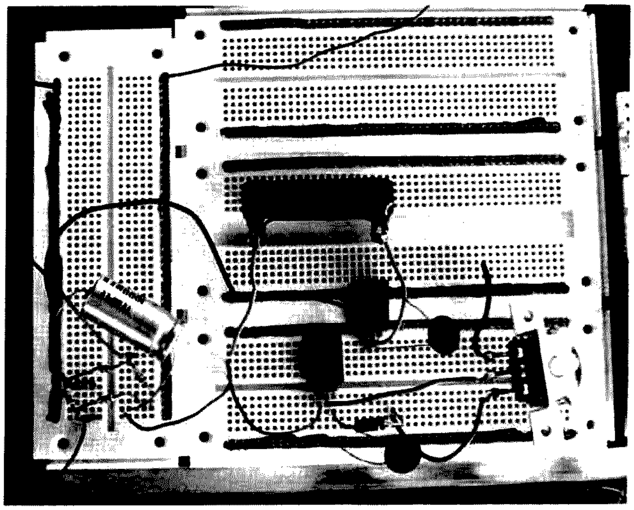

Photo F. Figs. 3(c) and 4 built up on the breadboards.

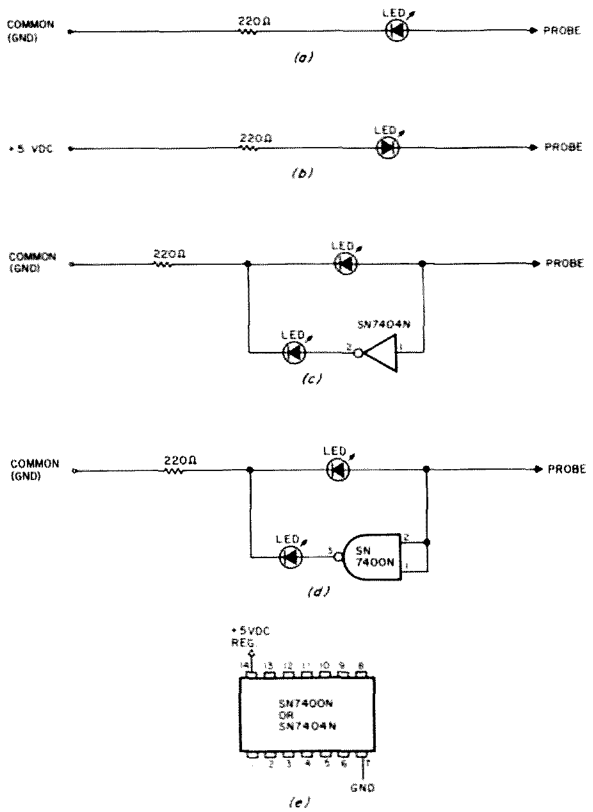

Fig. 3. Various logic probes. (c) and (d) are the best. (e) A drawing of the battery and ground connections for the SN7400N and SN7404N integrated circuits.

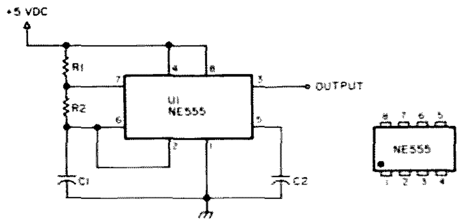

Fig. 4. Schematic of a pulse generator utilizing the NE555 integrated circuit timer. C1 – .1 mF disc ceramic; C2 – .01 mF disc ceramic; R1 – 1 megohm, ¼ Watt; R2 – 1.5 megohm, ¼ Watt; U1 – NE555, LM555, etc.

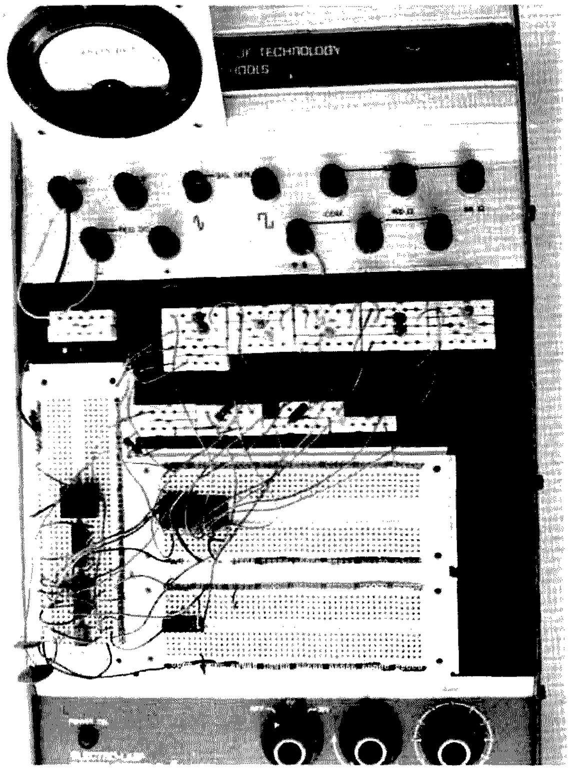

Photo G. The "Grass Roots Scanner" in its developmental stage.

the LEDs in the bracket which holds the dc voltmeter. They can be installed in the face or top of the chassis by drilling a hole the same diameter as the head. The rim at the back will prevent it from going completely through the hole, and a little glue will keep it in place.

There are much more sophisticated probes available, but this will serve your basic needs. If you decide you want a better one later when you get more involved, you can easily add one.[3]

Now What?

Okay, you have a breadboard design console built up, your power supply works, and so does your logic probe. Now what do you do with it? Let's breadboard a simple pulse generator and look it over a bit. See Fig. 4.

The 555 IC is basically a timer, but you can also use it as a pulse generator or as an oscillator. Almost every IC design that needs an oscillator, clock, or timer uses the 555, a very versatile and popular chip.

Lay out Fig. 4 on your breadboard, but leave the power off while doing the wiring. I use 24-gauge wire in different colors: red for power, black for ground, and green, white, and brown for miscellaneous wiring. This makes jumper tracing easier when I'm looking for a wire that I put in the wrong place. I cut some one-inch, some two-inch, and some three-inch pieces in each color and strip ¼ inch off each end. I keep the different lengths in plastic margarine cups, and, when I need a jumper, it's all stripped and ready.

Install the IC first, connect the resistors and capacitors from pin to pin shown, and then jumper pin 6 to pin 2 and pin 4 to pin 8. Ground pin 1, and run Vcc (+5 V dc) to pin 4, and you are ready. Turn on your power supply and touch the logic probe to pin 3 of the 555. The two LEDs in the logic probe should light alternately, which tells you that the output of the 555 is periodically changing from battery (high) to ground (low). Turn off the power, remove C1, replace it with a .02 mF capacitor, restore power, and again probe pin 3 of the IC. The LEDs should pulse much faster now. In fact, they might even be flashing so fast now that they both appear to be on all of the time.

The value of C1 controls the output timing of your pulse generator. Remove the .02 mF capacitor, put two .1 mF capacitors in parallel from pin 6 to ground (pin 1), and now you've really slowed things down. Increasing the capacity of C1 reduces the frequency, and the opposite has also been shown to be true. You can get it to pulse so slowly that it is possible to go out and eat lunch between pulses if you use enough capacity. Check your linear data book on the 555 for more information on this.

Varying R1 or R2 will also affect the timing. Replace R2 with a 4.7 megohm resistor. What happened? Use a 5-meg pot for R2, and you can vary the timing at will.

A few words of caution: Don't use wire larger than 22 gauge for jumpers, as it is

quite possible to damage the breadboard connectors. Don't use resistors larger than ¼ Watt or any other components whose leads are larger than that. Use care in removing ICs from the boards. Unless you have a very steady hand, you're liable to end up with a lot of bent pins. Heath provides a tool with its kits for this job that is nothing more than an L-shaped piece of metal about 1/8-inch wide. The short side of the L is slipped into the channel on the board under the IC, and a gentle prying motion does it quick and simple. Before I got one of these, I used to slide the tip of a very small screwdriver into the channel and raise it up.

Okay, you've started! Pick some simple circuits in the magazines or look some of the basic ICs up in the data book, hook them up, and see what they will do. Try the SN7400, SN7448, and SN7490. The 7400 is a group of gates, the 7448 is a decoder and LED driver, and the 7490 is a decade counter. I'll use these ICs in a forthcoming article I call the "Grass Roots Scanner." It's simple, super cheap, and it does the job. It will scan ten channels and give LED or digital readout of the channel selected.

If reading this article hasn't convinced you that building and designing with ICs can be easy and fun, try some of the ideas presented here, and maybe you'll convince yourself. ■

References

1. "How Do You Use ICs?", *73 Magazine*, August, 1976, p. 24; October, 1976, p. 38; November, 1976, p. 106; December, 1976, p. 36; Holiday, 1976, p. 24.
2. "The Ins and Outs of TTL," *73 Magazine*, May, 1976, p. 96.
3. "The TTL One Shot," *73 Magazine*, February, 1977, p. 56.
4. Continental Specialties Corporation, P.O. Box 1942, New Haven CT 06509.
5. James Electronics, 1021 Howard Avenue, San Carlos CA 94070.

New Products

from page 22

full load.

The whole package weighs only 3 lbs. and is priced at $69.95 for the 117 V ac 60 Hz version. A 220 V 50/60 Hz version is available for 10% more.

The Design Mate 1 is very well suited to a number of applications where the ease with which it permits designing in broad strokes is advantageous. These include the R & D test bench, schools, universities, and training institutions, and personal use.

Like all Design Mate units, the DM-1 comes completely assembled with detailed instructions and special application notes.

For further information, contact *Continental Specialties Corporation, 70 Fulton Terrace, New Haven CT 06509.*

NEW FROM YAESU— THE FC-301 ANTENNA TUNER

The FC-301 antenna tuner is designed for low- and medium-power applications in the HF amateur bands from 160 through 10 meters.

The FC-301 comes equipped with three UHF type female coax receptacles, and a threaded terminal to accept a single wire (long wire) antenna.

Antenna tuners are used to minimize the effects of swr on feedlines, and allow a receiver or transmitter to "look into" its design Impedance, regardless of the antenna Involved.

The FC-301 has both swr metering and power output metering, which is found only in the highest quality tuners on the market today.

Priced at $159.00, the FC-301 is available at authorized Yaesu dealers everywhere. *Yaesu Electronics Corporation, 15954 Downey Ave., PO Box 498, Paramount CA 90723.*

HEINEMANN OFFERS SAMPLE RE-CIRK-IT PROTECTOR FOR $1.00 AND A BLOWN FUSE

Heinemann Electric Co. has announced a program whereby it will send a sample of its new Re-Cirk-It[R] circuit protector, the modern successor to the fuse, for a dollar and a blown fuse.

The Re-Cirk-It protects like a fuse but is resettable. It is cost competitive with fuses and fuseholders, installs in the same panel space as a conventional 5/8"-diameter fuseholder, and is attractive enough to be placed on front panels.

The Re-Cirk-It protector trips instantaneously on short circuits and with delay on sustained overloads. It can only be electrically tripped, and it can't be turned off or held against a fault.

The Re-Cirk-It protector helps equipment manufacturers and users by eliminating nuisance service calls due to blown fuses. For the equipment user, it ends the bother of finding a fresh fuse and the inherent danger that the wrong size replacement will be used.

The protector is available for quick delivery in a wide range of current ratings from 0.25 through 10 A. It is UL-recognized and CSA-approved as a component protector.

To participate In the special offer (which runs through December, 1978), a blown fuse and $1.00 should be sent to Heinemann Special Re-Cirk-It Offer, PO Box CN01908, Trenton NJ 08608.

For further information about the Re-Cirk-It protector, request Bulletin KD-4001 from *Heinemann Electric Co., Magnetic Drive, Trenton NJ 08650.*

NEW 2 METER SSB TRANSVERTER FROM HAMTRONICS

Hamtronics, Inc., announces a new 2 meter SSB transverter, just in time for OSCAR mode J operation. Of course, it may also be used for mode A and simplex activity as well. The new model VX2 transverter is constructed on a 3 x 7½ inch G-10 PC board. The kit is easy to build and align, with test points at each stage.

It is intended for use with 10 meter SSB exciters, but some have been used with recycled 11 meter SSB units for inexpensive OSCAR operation. Various frequency schemes are available to accommodate different types of exciters. The transverter requires only 5 mW of drive to provide 2 W PEP output. Many of the newer exciters have a low power output, and

Continued on page 55

Yaesu's new FC-301 antenna tuner.

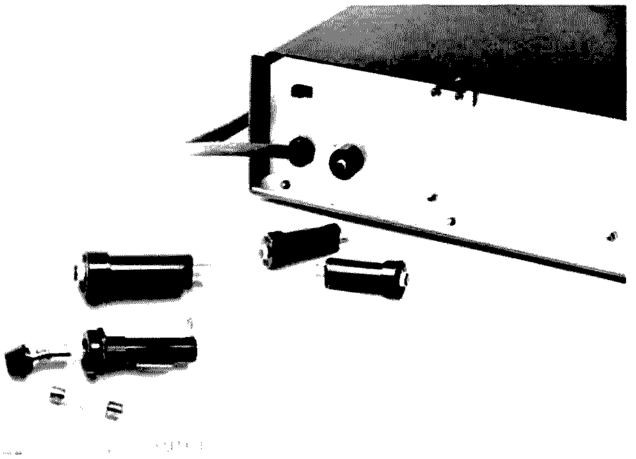

Heinemann's Re-Cirk-It protector.

Fake 'Em Out With Remote Control

— T-T-operated control unit

E. E. Buffington W4VGZ
2736 Woodbury Drive
Burlington NC 27215

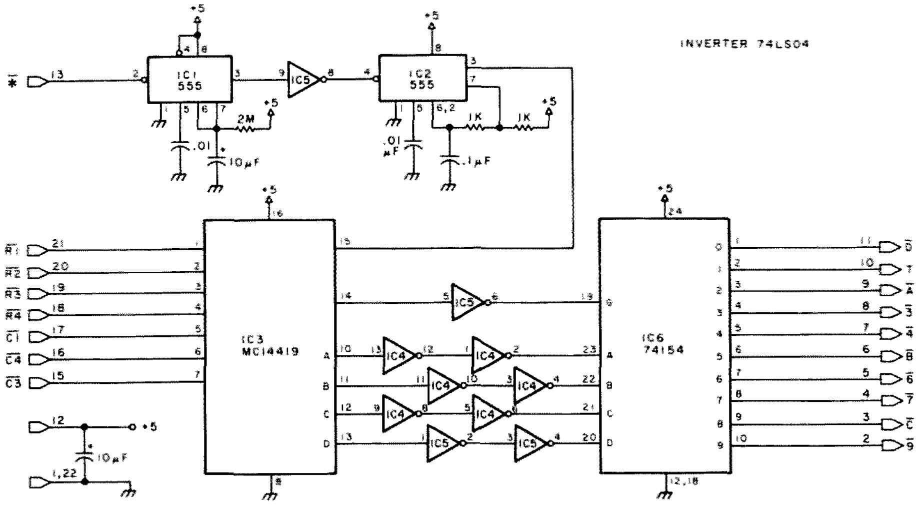

Fig. 1. Decoder/demultiplexer (DEMUX).

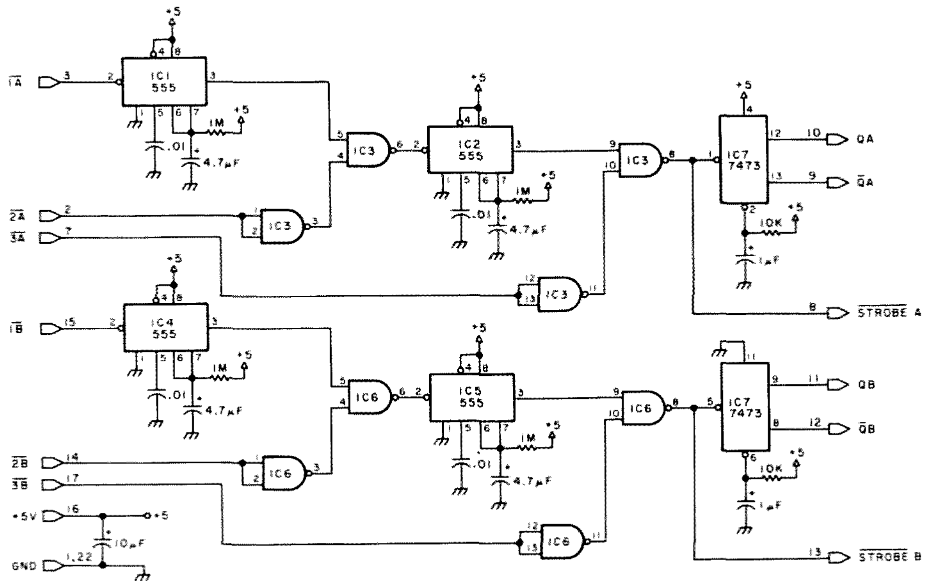

Fig. 2. Dual 3-input sequencer. All gates — SN7400N.

You have the repeater's squelch threshold set so that the carrier-operated switch is operating on less than 0.1 microvolt. Really great! You can work the weak ones and pull in those mobiles out on the fringe. Now button the machine up, lock the lock, and head back down the mountain. The road is rocky and bumpy, so be careful that you don't punch a hole in your oil pan. Ride the brakes, and keep the car in low gear. As you near home, you access the autopatch to give Honey a call. The call goes through and begins to ring. Now, for some reason, all you hear is noise. It seems that a station 70 miles away is working through a repeater 130 miles away on the same frequency, and all you hear is noise.

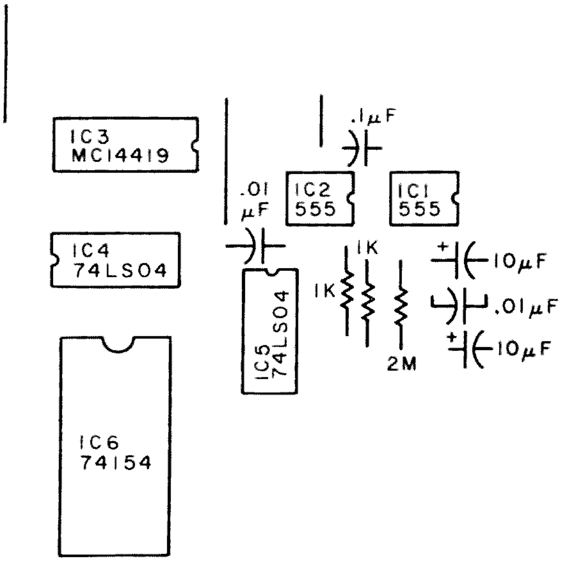

Fig. 3(a). Component layout — DEMUX.

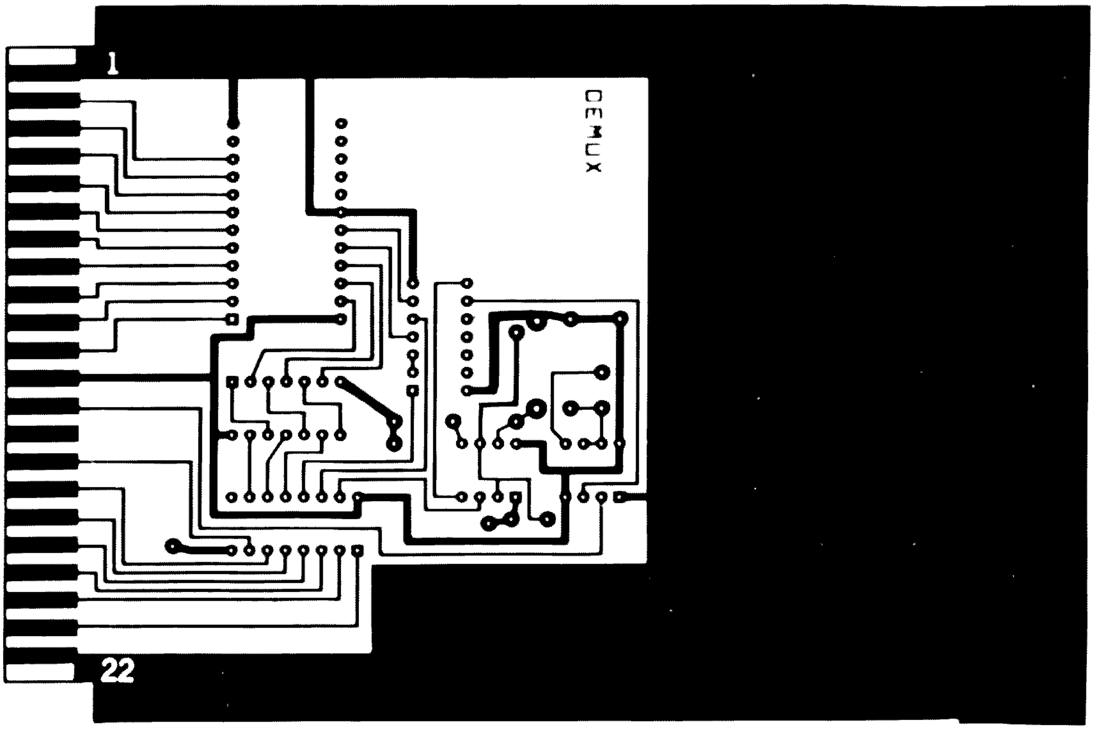

Fig. 3(b). PC board — DEMUX.

When Honey answers the phone, all she hears is noise. Quickly you touchtone™ 1A3, the noise disappears, and you hear Honey's voice.

What happened? Is this magic? No, it's just the application of the circuits described in this article. The three-digit touchtone code caused a resistor to be switched from across the squelch pot. This raised the squelch threshold so that it takes a 0.4-microvolt signal to operate the COS.

Two circuit boards are necessary to accomplish this magic. The decoder/demultiplexer (DEMUX) and the sequencer circuit board masters, parts layouts, and schematics are provided so that you can duplicate this handy project.

Decoder/Demultiplexer

The key-pad-to-binary

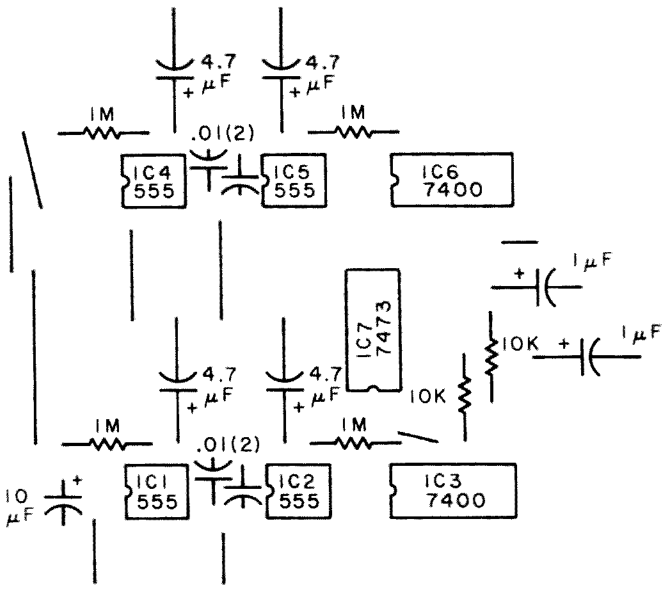

Fig. 4(a). Component layout – sequencer.

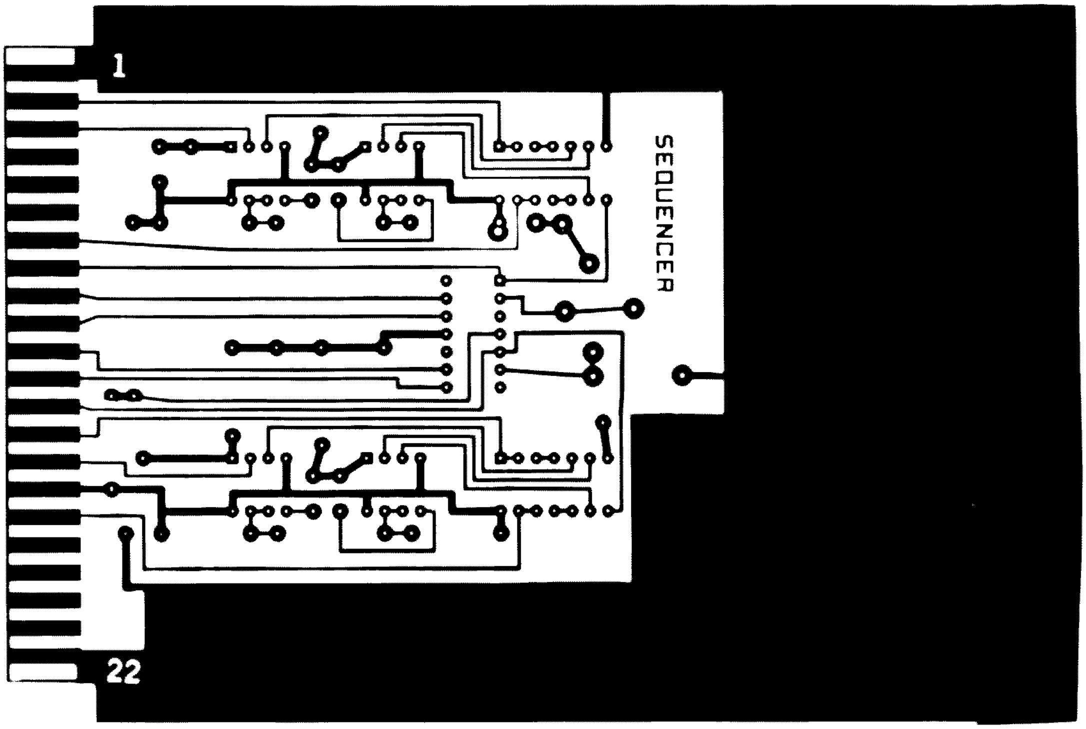

Fig. 4(b). PC board – sequencer.

converter MC14419 that I used in the digital autopatch in the April, 1977, issue of *73 Magazine* is used here, except that column 4 is inputted instead of column 2. This neat trick I owe to Ed Tipler WA6KYZ. You have ten outputs, except that 2, 5, 8, and 0 now represent A, B, C, and D.

A 555 timer connected as a single-shot disables the decoder for 20 seconds so that regular phone number dialing will not be decoded in the case where all numbers (no column 4) are used for your sequence. If you plan to always have a fourth-column digit in your code, you could eliminate this chip. The other 555 timer chip is an oscillator running at approximately 10 kilohertz, furnishing a clock to the MC14419.

A row-column match (both inputs low for 80 clock

Parts List

DEMUX

1	MC14419
2	74LS04
1	74154
2	555 timer
2	1k, ¼ W
1	1 meg, ¼ W
2	.01 uF disc ceramic
1	.1 uF disc ceramic
2	10 uF dipped tantalum

Sequencer

4	555 timer
2	7400
1	7473
4	eg, ¼ W
2	10k, ¼ W
4	.01 uF disc ceramic
4	4.7 uF tantalum
2	1 uF tantalum

Parts and circuit boards can be obtained from O. C. Stafford, 427 S. Benbow Rd., Greensboro NC 27401.

pulses) generates only one strobe pulse. The 74LS04 is used as an interface between CMOS and TTL. This strobe appears on one of the output lines of the 74154.

Sequencer

Two of these circuits are provided per board. If you need more, just add more boards. To the input labeled 1, you connect the output of the DEMUX that you want for the first digit in your sequence. The 2 and 3 inputs are connected similarly. A pulse on the first input starts the 5-second timer; a pulse on the second, if present during the 5-second rundown of the first timer, causes the second 5-second timer to start. This enables the third input to change the state of the J-K flip-flop and output a strobe pulse. This strobe pulse could be connected back to the input of the next sequencer to implement a five-digit code. You will notice that a capacitor to ground and a 10k Ohm resistor connected to +5 V clear pins 2 and 6 of the flip-flop. This assures that the output pins 12 and 9 will be low after a power interruption.

Applications

Fig. 5 shows several applications. Some are general in nature, and others are more specific, namely, remote control of squelch.

Fig. 5(a) is a simple transistor switch. Punch out the sequence on your key pad, and the transistor saturates. Punch it out again, and the transistor is off. The addition of the relay, Fig. 5(b), needs no explanation. Fig. 5(c) is a little more sophisticated, as one sequence is needed to turn it on and another to turn it off. This would be useful in the squelch example, Fig. 6.

There are generally two ways of setting the squelch. One is to control the level of noise, and the other is to set a dc level. The method used in your receiver can be determined by examination of the schematic or by reading the instruction book. In the first case, a higher amount of noise to the squelch circuit will yield a higher squelch threshold. In the dc case, you may have to get out the old voltmeter to see how the thing works. Note the change in role of the original pot in the case of the noise-adjusted squelch.

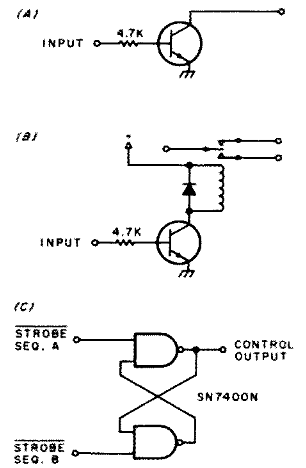

Fig. 5. General applications. (a) Saturated switch; (b) Relay control; (c) Strobe from sequencer "A" will cause the output to be high. A strobe from sequencer "B" will cause the output to be low.

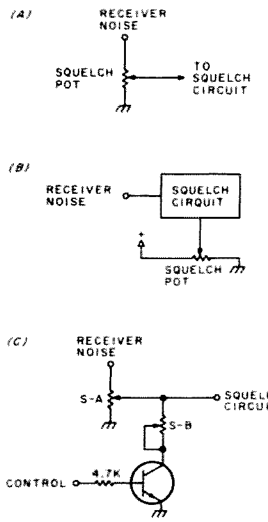

Fig. 6. (a) Squelch pot controls noise; (b) Squelch pot controls voltage threshold; (c) Set pot S-B for maximum squelch sensitivity. Set pot S-A for desired higher threshold. Some interaction should be expected.

Other applications include setting the output power level, starting a recorded message, and linking to another repeater (super coverage!).

It's surprising how much trouble intermod can be. Many repeaters are troubled by this plague, and, until the culprit can be found and remedial action taken, there is a surprisingly effective cure. A 6 dB pad connected in front of the receiver will do far more than a 6 dB reduction of intermod as you are reducing the "local oscillator" injection to the nonlinear circuits in your receiver which are doing the mixing. This 6 dB pad can, in some cases, eliminate over 20 dB of intermod. Try it, if you don't believe it! Now, it won't do anything if the mixing is taking place external to your system (in a corroded antenna connection, for instance).

How about time or temperature on command? And better yet, how about your ideas? Why don't you share them with me? If *73* will print the stuff I send them, they surely will print your ideas. Think about it, and then act on it. ■

New Products

from page 51

older ones can either be modified or used with an attenuator to provide the required drive.

Perhaps the best feature of this new transverter kit is the economical price—only $59.95. Two linear power amplifiers are available for higher power output. A model LPA2-15 provides 15 W PEP; model LPA2-70 provides 70 W PEP output. A cycolac case is also available for the transverter and PA as an option.

For more information, call (716)-663-9254 or write for free catalog on these and other VHF and UHF kits, including preamps and converters for OSCAR. *Hamtronics, Inc., 182-F Belmont Rd., Rochester NY 14612.*

MC-3 MOBILE CHARGER FROM STANDARD

Standard Communications Corp., announces the availability of a mobile-type battery charger designed for use with their hand-held transceivers. The model MC-3 is designed specifically for charging nicad batteries of hand-held transceivers encased by a leather carrying case.

For complete details, see your Standard dealer or write to *Standard Communications Corp., PO Box 92151, Los Angeles CA 90009.*

DESIGN MATE™ CASES OFFER BUILDERS ATTRACTIVE, INEXPENSIVE OPTIONS

After long offering a product line that encourages the design and development of new electronic circuits, Continental Specialties Corporation now offers the do-it-yourselfer a place to put them. Their Design Mate cases are attractive, inexpensive answers to housing prototype electronic circuits.

These are the same cases that CSC uses to house its popular Design Mate series of test instruments. They are made of high-impact insulated plastic in one piece. They feature a slope front panel, a metal bottom, and include mounting screws.

There are two models of the CSC Design Mate case: the

Continued on page 60

Allan S. Joffe W3KBM
1005 Twining Road
Dresher PA 19025

Now— A Digital Capacity Meter!

—simple construction project

There are many means of taking the measure of a capacitor. For the range of capacitors that the instrument to be described can handle (approximately one microfarad to 99,900 microfarads), the best method to refer to is time versus voltage. Mother Nature and science reached a detente relating the charge or discharge of a capacitor versus time for the charge or discharge to reach some specific limit. The charge limit reaches 63% of the applied voltage in RC seconds, where R is in megohms and C is in microfarads. Thus, if you were to apply exactly ten volts to a capacitor which you made sure was totally discharged, through a resistor of 1 megohm, and you monitored the voltage rise across the capacitor with a voltmeter that did not load down the circuit, you could use a stopwatch to time the number of seconds it took for the voltage to hit 63% of 10 volts, or 6.3 volts. It is easy to see that a 1-microfarad capacitor would time out at 1 second and that a 100-microfarad condenser would time out at 100 seconds.

You could work the same general method using the discharge curve, but your point of measurement would be when the voltage had fallen 37% from a fully charged capacitor. Herein lies the rub, for it is much harder to tell when a capacitor is fully charged than fully discharged. It takes about six RC time constants for a capacitor to charge to about 99% of final full charge, so you would have time to read the paper if the capacitor under discussion was a 92,000-microfarad unit from your favorite computer.

Photos by WA3PTC

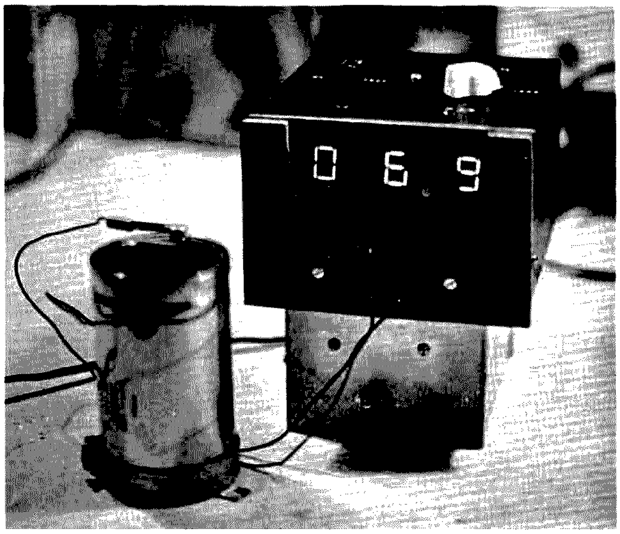

Fig. 1 diagrams the basics required to translate the time-versus-voltage method of capacitor measurement into terms of electronic hardware.

Fig. 2 is the schematic diagram of the actual unit, which works as follows:

Note the "Function" switch S-1-a, 1-b, 1-c (three-pole, double-throw). In the Off position, this switch performs the following three tasks:

1. It provides a short across the capacitor connected to the test leads so that you start out with a fully discharged capacitor.
2. It blocks the flow of 60 Hz timing pulses to the counting system, which consists of a squaring circuit followed by a divide-by-six counter which produces 10-Hertz pulses.
3. It makes the reset terminals of the three 7490 decade counters HIGH, which is the condition required to make the three-digit display show all zeros prior to making a count.

In the Test position of this switch, the following conditions prevail:

1. The short is removed from the capacitor under test, and it is connected to the measuring circuitry which starts out basically with the range switch S-2 (one-pole, four-positions) and the 741 op amp used as a comparator.
2. It connects the 60 Hz timing waveform to the sine wave squaring circuit which uses two sections of the 7408 AND gate package.
3. It puts a ground on the 7490 reset line so that the counters will now be enabled to count.

Switch S-2 is the range switch, giving scaling factors of one, ten, one hundred, and one thousand. The zener-regulated nine volts positive is applied to the capacitor under test through one of these range resistors. Notice that the inverting input of the op amp is connected to a positive voltage through a voltage divider. Under conditions where the positive voltage to this input is greater in magnitude than the positive voltage applied to the noninverting input, the output of the op amp (pin 6) is highly negative. When the charging voltage of the capacitor under test reaches and just slightly exceeds the reference voltage on the inverting input, then pin 6 (output) goes highly positive.

In this fashion, by changing output polarity, the comparator gives a fixed point in time when the charging voltage just exceeds the reference voltage applied to the inverting input of the op amp.

Now all you have to do is provide a means of automatically starting a "clock" coincident with the start of the charging cycle and use the flip-flop of the comparator to stop the clock. Then the capacity of the unit under test is merely the multiplier of the range switch times the number of full and fractional seconds shown on the three-digit readout.

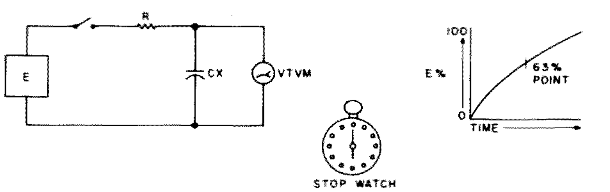

Fig. 1. Basic concept of capacitor measurement using time versus charging voltage rise.

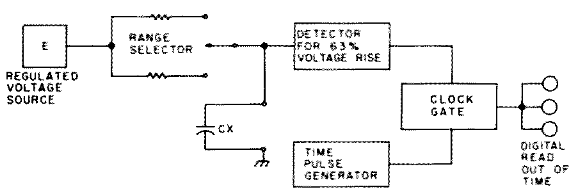

Fig. 1. (a). Basic translation into electronic hardware.

Tackling the bits and pieces of how this all happens, consider the output swing of pin 6 of the comparator. It goes from approximately minus 8 to plus 8 volts in the course of normal operation. The function of Q1 (2N3904) is to convert this voltage swing to standard voltage levels acceptable to the TTL logic blocks used in the unit. In addition to this interfacing function (the only buzzword so far), the output from the collector is inverted in polarity, which you will see is needed to fit the rest of the circuit functions.

Since the timing chain starts in the power supplies, I'll say just a word about that here. The 5-volt supply is run of the mill with a 1-Amp capacity regulated by an LM309K. You can lash up any kind of a plus and minus 9-volt supply you care to for the op amp, but it must be zener regulated, at the least. From the transformer for this split supply, you need to provide a source of 60 Hz voltage from a voltage divider (1.3 to 1.5 volts ac), the only proviso being that the leg of the divider to ground should be about 1500 Ohms or less. This is so the squaring circuit which is next in line sees a reasonably low impedance.

The low-voltage ac goes to the two sections of the 7408 through a diode. The output amplitude is a rather decent 60 Hz square wave, about four volts in amplitude. This square wave is applied to the divide-by-six section of a 7492, which results in a 10 Hz output.

The digital readout section consists of three 7490 decade dividers, each of which is connected to a 7447 seven-segment decoder driver. If you skip over some of the intermediate control circuitry and merely connect the 10 Hz to this three-digit divider/display chain, the display would consist of the right-hand digit showing tenths of seconds, the middle digit showing unit seconds, and the left-hand digit showing tens of seconds.

Now let's backtrack and see how to connect the leg bone to the ankle bone. You now have the comparator, the range switching, and the 2N3904 interface, and all you have to do is use it to stop the clock when the charge on the capacitor under test reaches the comparator reference voltage.

Interpose some logic circuitry between the 10 Hz pulses from the 7492 and the three-digit counter display as follows. A third section of the 7408 AND gate package is used as a gate. One side of this gate is fed by the 7492 with its 10 Hz output. The second input to this gate is a series chain of the output of the 2N3904 feeding into a 7474 D-type flip-flop used as a synchronizer. The output, Q, of this flip-flop then goes to the 7408 section being used as a gate.

The 7474 makes sure that you always get a full final pulse or count through the gate no matter when the comparator triggers at the end of the measuring cycle. Note that its clock input is fed from the 10 Hz source.

Now let's take a quick trip through the whole shebang to see what happens when you measure a capacitor.

Suppose you have an electrolytic which is marked 6 uF, and you want to check it. With the function switch in the Off position, you connect the test leads to the capacitor, being careful to observe polarity. The test voltage does not exceed 5 volts. In passing, if the capacitor has not been in service, take the time to form it for a few short minutes at near its rated voltage, or your reading can be way out of the ball park.

Set the range switch to Times One, as this will basically measure up to 10 uF, which will be shown by a readout of 10.0 (this range will really go up to 99.9 uF, but it will take 99.9 seconds to do so, which makes another range more logical for a larger capacitor).

When you throw the function switch to Test, things begin to happen. The short is removed from the capacitor, and it begins to charge. The 60 Hz is squared up and divided by six, feeding the gate and the synchronizer. The 7490 counter chain has had its reset bus grounded so that it can count any pulses coming its way. The output of the op amp is now highly negative, making the collector of the 2N3904 high (positive 5 volts). This high is applied to the D-input of the 7474, and the first low-to-high transition of the 10 Hz signal applied to its clock input causes its Q-output to go high (and stay high). This TTL high is passed to the clock pulse gate, causing 10 Hz pulses to be passed to the 7490 divider/readout chain, and the readout begins.

When the charging cycle finishes, tripping the comparator output positive, this makes the collector of the 2N3904 go negative. On the very next low-to-high transition of the 10 Hz clock which is applied to the 7474, the Q of this flip-flop goes low, which shuts off the time pulses to the 7490 count/display chain. Now you

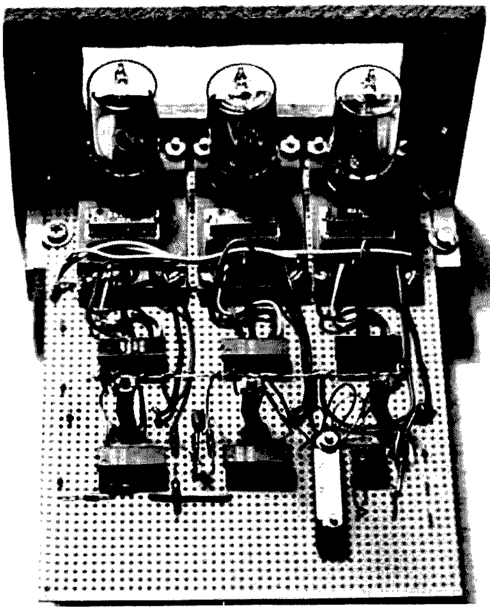

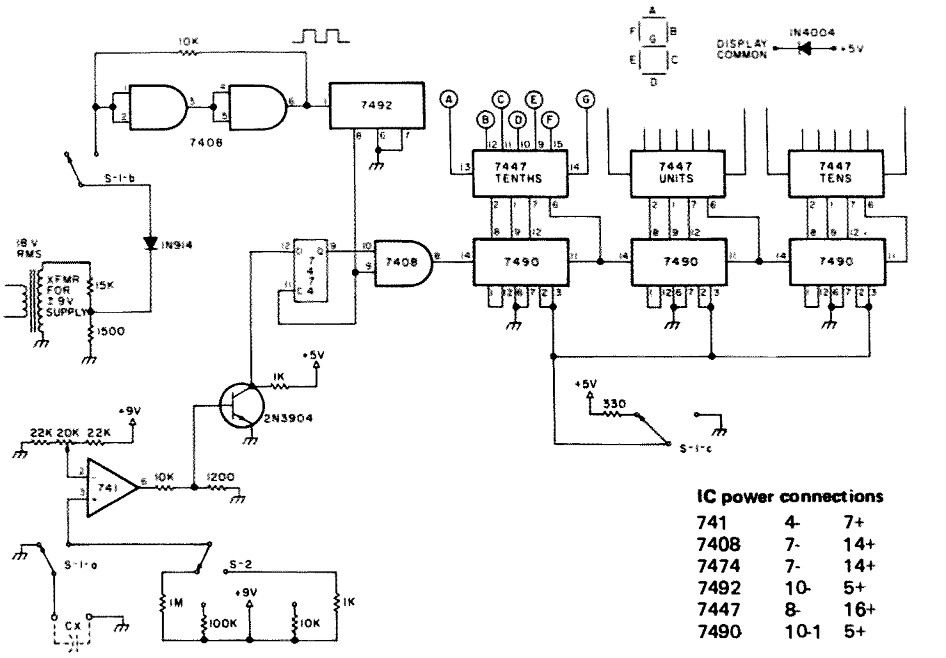

IC power connections

741	4-	7+
7408	7-	14+
7474	7-	14+
7492	10-	5+
7447	8-	16+
7490	10-1	5+

Fig. 2. S-1 shown in Off position. S-2 shown in Times-One position.

merely multiply the range switch setting by the indicated time on the display, and you have your capacitor measured.

Now for a few notes on calibration: The range multipliers are in decade ranges of one, ten, one hundred, and one thousand. As noted on the schematic, the resistor values for these ranges are one megohm, 0.1 meg, 10k, and 1k. Five-percent resistors will do a decent job, but 1% resistors are preferred for aesthetic reasons if not for practical ones. Electrolytics are generally anything but what is marked on the pretty package, generally erring heavily on the high side of what you think you bought. Oil-filled or large paper caps are generally truer to the mark, but, like all generalities, this can lead you astray. To start, let's assume that you have one favorite 5 uF oil-filled capacitor that you know is on the money (you checked it in the well-equipped CB shack of the guy next door). Connect it to the machine (ignoring polarity, as it is not electrolytic), and start a testing cycle naturally using the Times-One range (one meg). If you have started out with the variable element of the voltage divider feeding the inverting input of the op amp set to the middle of its range, you will probably be close to the mark. Adjust this variable trimmer resistor on subsequent timing cycles until the display agrees with your known value of capacitor. Be sure that you have the function switch in the Off position at least thirty seconds between successive measurements on the same cap to guarantee that it is once again discharged. If you do not, then your readings will vary. This is the entire calibration effort, for, if your range resistors are on the money, then the other ranges should be in good shape.

As you can see, my copy was built on perfboard (4.5 by 6 inches). If you are sharp, as you gaze you will see that the board is one IC short. When WA3PTC takes pictures, you have to be ready when he is, and I was not quite all there.

A good quality multi-turn trimmer resistor is a must for the calibrating pot. Anything else will lead to frustration. There is nothing magic about the plus and minus 9 volts. My particular zeners came out at 8.8 volts, which worked fine.

The choice of readouts is optional. I used RCA DR2000 incandescent units, as Herback and Rademan was selling out some readout kits from RCA at an unreal $2.00 per digit, including PC board and decoder/driver IC. As shown in the diagram, I am feeding the segments through a diode to lower the 5 volts to about 4.2 under load. This way, the life is extended. LED readouts are perfectly acceptable according to personal taste; it just means that you have to add the usual current-limiting resistors to the circuitry.

I used TTL logic because I had it on hand. There is no reason why CMOS, with its much lighter current drain, could not have been used.

An open capacitor will show no count; a shorted capacitor will make the display count forever. This is handy, as it gives you a clock that counts up to 99.9 seconds for timing any event in that range. It could have a darkroom spin-off for you photo buffs out there. ■

New Products

from page 55

DMC-1 measures 6.75" x 7.5" with a height that slopes from 1.5" to 3.25"; the DMC-2 measures 5.63" x 6.0" with a height that slopes from 1.5" to 3.0". The DMC-1 weighs 12 ozs., the DMC-2 10 ozs.

The DMC-1 is priced at $6.95. The DMC-2 is priced at just $5.95. For further information, contact *Continental Specialties Corporation, 70 Fulton Terrace, New Haven CT 06509.*

PALOMAR PTR-130K TRANSCEIVER BRINGS SPACE TECHNOLOGY TO CONSUMER ELECTRONICS FIELD

The Palomar PTR-130K is the first completely multifunctional transceiver ever made available to the public. It incorporates features from the outer perimeters of logic technology.

The Palomar PTR-130K is a miniaturized mobile transceiver capable of operating in 100 cycle resolution from 100 kHz to 30 MHz in all modes of transmission and reception. Instant frequency selection is available at the touch of a finger.

The Palomar PTR-130K's unique 100 Hz frequency synthesizer with 5 kHz reference does *not* use D/A converters as do most amateur rigs claiming 100 Hz synthesis.

Its exclusive rf compressor effectively increases transmitter output by 12 dB (16 times). Two cascaded Collins mechanical filters provide superior receive selectivity, with a typical shape factor of 3 dB/60 dB 1:1.25.

Yet all this and much more is packed into a small, 6½" x 2½" x 8" package.

The Palomar PTR-130K is the latest in a long line of innovative electronics products from *Palomar Electronics Corporation, 665 Opper Street, Escondido CA 92025.*

CSC PROTO-BOARD(R) PB-6 SUGGESTED AS ENTREE TO SOLDERLESS BREADBOARDING

For those interested in getting their feet wet in solderless breadboarding without wringing their wallets dry, Continental Specialties Corporation recommends their Model PB-6 Proto-Board(R) Kit, a low-cost

Continued on page 123

Gary McClellan
Box 2085
La Habra CA 90631

DMM Survival Course

—"all" about using digital multimeters

If you are one of the great many people who have bought a digital multimeter, congratulations! That digital multimeter will do much in the way of simplifying your measurement chores and, hopefully, make ham radio more fun. But, like most pieces of equipment, the digital multimeter has its own peculiarities, some of which may not be fully discussed in the owner's manual. Your digital multimeter (hereafter DMM) can lie to you and give inaccurate readings consistently if you misuse it. And, worse, it can be damaged if misused.

It's awfully tempting to write a long list of dos and don'ts at this point, but not everything I have to say will fit neatly into a do/don't chart. I would suggest starting with these basics:

First, check over your test leads, especially if you are using ones from your shop that didn't come with the DMM. Check for broken insulation and broken connectors; if you find any, replace, replace, replace. I have found that quite often people try to "get by" with ratty old test leads, and that can be dangerous. To this end, we at Gary McClellan and Company supply gratis a set of test leads with our 101 DVOM. There's no sense in taking chances with a set of bad leads. So, if you are getting a new set, what kind of test leads should you get? Get one with an insulated alligator clip and the other with a standard test prod. The leads should be about 3' to 4' long, with shorter lengths desirable (reduces noise pickup).

Now for some general operating hints: Surprisingly, a good many manufacturers of DMMs do not take the time to talk about using their products. So, as a result, you are assumed to be proficient at using DMMs, and that is a huge mistake. First, let's look at the basics. A DMM operates just like an analog VOM or VTVM, for the most part. You select the function you want (ac/dc volts or current or Ohms). Then you select the range you want to match what you are measuring. If you don't know the voltage, current, or resistance in the circuit under test, you always start at the highest range and work down through the ranges until you get a good strong reading (ideally, midscale on an analog meter). You use your DMM the same way, but written between the lines is a lot to go wrong with your meter.

The first place you must watch is when you change functions. Always change functions before making any measurements. There are two reasons. First, in some meters, you can jolt the Ohms section with a voltage or current strong enough to damage it. And second, if your meter has push-buttons, you can nudge several at one time, applying destructive voltages to several parts of the meter. Blowing, say, the Ohms section and the ac volts section is not funny. This is why we use a quality rotary switch in our instrument to lessen the chance of multiple damages. But never switch functions when measuring a live circuit. You can switch from resistance to volts (and vice versa) in a dead circuit and then power it up, but even this is not wise.

Another thing you must be especially careful of is changing ranges. On a meter with push-buttons, this is especially important because you can press several on most meters and that means trouble. It is wise to select the highest range, measure, remove probes, select range, etc., procedure when measuring volts and current. I strongly recommend removing the leads and selecting range, especially when measuring high voltages (1 kV or so) or any current. If you don't, you may have destructive arcing inside an attenuator resistor or at the switch contacts. Arcs are also murder on the CMOS circuitry used in modern DMMs. Need I say more? You can safely change ranges when measuring resistance without lifting the probes, however. But be careful when measuring voltage and current.

Always think safety when using a DMM. Nowadays, you don't see a lot of high-voltage gear, but, nevertheless, it's there in linears and TV sets. Don't ever rush a measurement on one of those high-voltage circuits without taking some precautions. Make sure your meter can read the voltage you are going to measure (most DMMs will read up to 1200 volts dc and 750 volts rms ac). If not, get a high-voltage probe for your meter. The Heath IMA-100-10 probe will let you safely measure up to 30 kV. You should always connect the probe to the equipment and then apply power and check the reading. If you can't do it this way, keep one hand in your pocket when measuring. Also, it is wise to have a rubber mat in your shop — especially if you work in a damp basement. Stand on it when working with high voltages. As for the meter, tie the ground lead to the ground or common input jack, even if you are measuring negative voltages. In some meters, the metal case is tied to the gnd/com jack, and that can be hazardous. In general, use common sense when using a DMM, and use it safely. And don't place it on a high shelf

where you can pull it off by the leads and get beaned or have it fall into a piece of live equipment.

Now that we have looked at some general stuff, let's look at a few specifics. These are things that will cause errors in your readings, some of which can be amazingly consistently wrong. Surely, by now, most people believe that a digital readout can lie just as well as an analog one can. Yet, at one time, there were folks who believed that, if it's digital, it must be right. This was especially true with digital clocks, which look super accurate, but, of course, can be super accurate if you subtract, say, 5 minutes. DMMs are like that, and the voltages, currents, and resistances they measure can throw you off if they are not pure dc, ac, or resistive. Also, the meter has tolerances that add to or subtract from the readings.

Let's look at instrument tolerances first because they are easier to understand. Your meter has what is known as a "basic accuracy" spec, or the best accuracy spec of the meter. This is always the dc volts function and usually the lowest range. Typical basic accuracy is on the order of 0.1% ± 1 count. A "count" is plus/minus a "1" added/subtracted to the farthest right-hand digit. So say you are measuring 1.500 volts. You have an accuracy of plus/minus 0.002 volts (1.5 x 0.1%), or a range of readings of 1.502 V (+ 0.1%) to 1.498 V (- 0.1%). Then add the 1 count accuracy spec, and you get 1.503 V, 1.501 V or 1.499 V, 1.497 V. So, you see, these specs add up. For best accuracy, always try to fill up all 3½ digits with numbers, for the more numbers you show, the greater your accuracy. A reading of 1.500 read on your DMM's 2-volt range can be more accurate than a reading of 01.50 on your meter's 20-volt range. Keep this in mind; it also holds true on ac and Ohms functions.

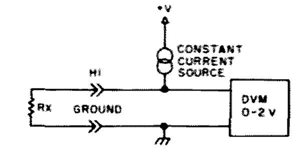

Fig. 1. Basic Ohms circuitry. The constant current source is very vulnerable.

The ac section of your meter adds some error to your measurements, above the basic accuracy of your DMM. The ac accuracy is the basic accuracy plus the accuracy of the ac/dc converter in your meter. The number is always larger than the basic accuracy. Your meter will probably have an accuracy of ±0.5%, provided that you are measuring a low-distortion sine wave and are within the frequency response limits of your meter. This is very important because waveform and frequency have a powerful effect upon your accuracy. Also, noise pickup will raise hob with your readings. For best results, measure sine waves (note that some manuals give correction charts for other waveforms – these are usually the better meters) of low distortion of 1% and under. Stay within the maximum frequency limits – well within them. Use shielded cable to cut noise pickup when measuring signals either from high-impedance sources (100k and up) or on signals below 1 volt. Measure ac signals this way, and you should get the best accuracy from your meter. So how do you determine a low-distortion waveform? Check with a scope if you have one handy. A rule of thumb: Don't trust any signal dirtier than the ac power line. The frequency response limits should be stated in your manual; if not, assume about 50 Hz to 1 kHz. Most meters will go from 30 Hz to 5kHz with full accuracy, and some will go to 100 kHz with reduced input voltage and reduced accuracy.

Your Ohms section also adds error to the basic accuracy of your meter, but there

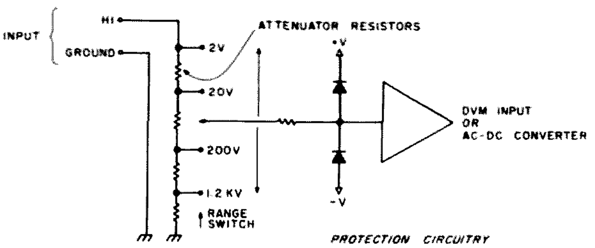

Fig. 2. Ac or dc volts input circuitry. The resistor and diodes on the op amp are protection circuitry.

aren't as many sources of error as the ac volts function. The main things you need to concern yourself about are that you never apply voltage to the Ohms circuit and that you try to get as many numbers as possible displayed for greatest accuracy. Remember that a reading of, say, 1.200k is better than 01.20k because it is less susceptible to the ± 1 count error and the Ohms accuracy. If you are making in-circuit measurements, watch out for semiconductor junctions, which can be turned on by the ohmmeter. Some DMMs put as much as 15 volts on the part under test. If you get strange readings, disconnect one side of the part and then check its resistance. On very high-resistance measurements, you may discover that the readings jump around quite a bit. This can be caused by several things, but it is mainly due to hum pickup on the leads. Either tie a 0.05 uF capacitor (use mylar) across the leads, or plug the part directly into the front panel jacks. You will notice this on the 2-meg and 20-meg ranges, and it can be quite annoying. The cure is simple.

Finally, there are the current ranges. The accuracy of most low-cost DMMs is a joke, with 1 to 5% being typical. We deliberately left off current ranges on our Gary McClellan and Company 101 DMM because we couldn't get good accuracy at low cost, which reflects poorly in terms of the other accuracy specs of an otherwise high-quality meter. So, when you measure current, your analog meter may be more accurate.

Here are a few tips for measuring current: Always use a range higher than the current you are going to measure. Never change ranges while you are measuring current. You may damage (pitting of contact surfaces) your DMM's switches. If you are measuring current, check to be sure that your circuitry is working properly. Drops through the meter (known as "insertion loss") will sometimes kill your circuitry. This is especially true with TTL logic. Some meters drop 2 volts with 2 Amps, and that 2 volts will stop your TTL dead in its tracks. If this happens to you, put your meter on 2 volts ac/dc and measure the drop across a 0.1-Ohm, 10-Watt resistor. A reading of 0.200 is 2 Amps, of course.

You should be aware that terrible things can happen to your meter or equipment if you seriously overload your meter. Personally, my big sin is putting voltage on the current shunts of my laboratory meters; the result is usually a blown fuse in the meter. However, others are not so lucky. You can very easily avoid damage to your meter simply by not rushing.

Most overloads do not damage your meter. But, nevertheless, there are several ways to kill a DMM, so let's look at them. The Ohms function is vulnerable, with the bottom range being the most vulnerable (usually 200 Ohms or 2k Ohms). The most current is available on these ranges, and that is difficult to protect. Believe me, the Ohms protection circuitry is one of the big things that separates the under $100 meters from the over $300

instruments. The protection circuitry in the expensive meters is costly and often complex, often more so than the circuitry being protected. Fig. 1 shows the basic Ohms circuit; voltage applied to the input usually takes the constant current source in a puff of smoke. In our meter, we use an expendable resistor. If it blows, the other ranges stay unharmed and perfectly usable. One outfit uses an SCR crowbar circuit, shorting the Ohms jack and hopefully blowing a 2-Amp fuse inside the meter. This meter can cause extensive damage to the equipment you are measuring, so be careful.

Needless to say, never, never put any voltage on your meter while it is in the Ohms function.

The ac/dc voltage ranges are pretty well protected in most DMMs by diode/resistor clamps, so it is not always that you can blow up these parts of your meter. Fig. 2 shows a typical input circuit. However, very high voltages or pulsed voltages can raise havoc with your DMM. Never exceed the maximum ac/dc voltage ratings of your meter. If necessary, get the Heath high-voltage probe mentioned earlier. On most meters, this means 750 volts rms ac and 1200 volts dc. If you exceed these ratings by much, you risk arcing inside the DMM switches and range resistors. If you arc much inside a range resistor, you change its value permanently. Watch that voltage. TVs are murder in this respect; they have many relatively low voltages with very high pulses present. If the schematic says, "Do not measure," believe it. The same is true with rf fields.

The current ranges don't need too much comment. Just be sure to never exceed the ratings of a range, otherwise you may "strain" a resistor. Don't try to measure, say, 2 Amps on the 20 mA range.

Why all the comments on overload? Simple. Today, if you damage a piece of equipment, it goes to the factory. With a DMM, it not only gets fixed, but recalibrated as well. And that usually goes for kit DMMs, too. I may be overstating my case, but a little careful use of your DMM can save grief. DMMs are getting better and tougher to blow up, but you can still do it. They are a little easier than a VOM to damage right now. Be reasonably careful and you won't have any problems.

DMMI?

Strange as it may seem, DMMs can cause RFI problems. This is especially true of the ones with plastic cases. You may have discovered this problem already if you work on sensitive communications equipment. Just clipping the ground lead to the chassis of an HF receiver or transceiver is often enough to create a loud broadband buzz in the speaker. This is primarily caused by the multiplexed display in the DMM, and the noise floats down the test leads. Unlike these instruments, the Gary McClellan and Company model 101 DVOM uses both a metal case and a direct drive display, making repair of communications equipment possible with less noise pickup. If you have encountered this problem, your best recourse is to use a regular analog VOM or VTVM, leaving the DMM for less critical chores. You can certainly use that noisy DMM for a signal generator if you wish. Besides us, B and K Instruments is now paying attention to this problem by metal coating the inside of the case to cut radiation.

That just about does it for using a DMM. As you have read, it's not really so hard to use, and, if you pay just a little attention to the peculiarities of the DMM, you should be rewarded with the best accuracy your unit has to offer. ■

FCC

Reprinted from the Federal Register.

PART 2—FREQUENCY ALLOCATIONS AND RADIO TREATY MATTERS; GENERAL RULES AND REGULATIONS

PART 97—AMATEUR RADIO SERVICE

Prohibiting the Marketing of External Radio Frequency Power Amplifiers Capable of Operation on any Frequency From 24 to 35 MHz and Requiring Type Acceptance of Equipment Marketed for Use in the Amateur Radio Service

AGENCY: Federal Communications Commission.

ACTION: Final rule.

SUMMARY: This document requires a grant of type acceptance from the Commission prior to the manufacturing or marketing of any external radio frequency power amplifier in the Amateur Radio Service and requires that any external amplifier not be capable of operation in the frequency range of 24 to 35 MHz. This action was taken in response to the large number of amplifiers currently being produced for illegal operation in the Citizens Band Radio Service and by unlicensed operators. It should reduce the availability of this equipment to these operators and therefore will result in a substantial reduction of interference to other users of the radio spectrum.

EFFECTIVE DATE: April 28, 1978.

ADDRESS: Federal Communications Commission, Washington, D.C. 20554.

FOR FURTHER INFORMATION CONTACT:

John A. Reed, Office of Chief Engineer, 202-632-7093.

SUPPLEMENTARY INFORMATION: Adopted: February 16, 1976. Released: March 20, 1978.

By the Commission: Commissioner White concurring in part and dissenting in part and issuing a statement.

In the matter of amendment of Parts 2 and 97 of the Commission's Rules to require type acceptance of equipment marketed for use in the Amateur Radio Service; and amendment of Part 2 of the Commission's Rules to prohibit the marketing of external radio frequency power amplifiers capable of operation on any frequency from 24 to 35 MHz.

1. Notices of Proposed Rulemaking in the above captioned matters were released on February 28, 1977. The deadline for the submission of comments was May 25, 1977, and for the submission of reply comments was June 6, 1977. In response to petitions received from the R. L. Drake Co., the Heath Co. and the American Radio Relay League, Inc., these dates were extended to June 24, 1977, for filing comments and to July 6, 1977, for filing reply comments. The report comment date was further extended to July 13, 1977, in response to a petition filed by the R. L. Drake Co. In response to a petition by the American Radio Relay League, Inc., oral arguments were held on December 1, 1977, to allow interested parties to present their ideas to the Commission en banc.

2. Docket 21117 proposed to require type acceptance pursuant to Part 2 of our rules for all amateur transmitters and external radio frequency power amplifiers. Various other changes were also proposed including increasing the level of spurious and harmonic suppression to 43+10 log (power in watts) decibels below the mean power output of the transmitter or amplifier for all emissions outside of the amateur band being used and exempting the individual amateur operator from the type acceptance requirements.

3. Docket 21116 proposed to prohibit the marketing of any external radio frequency power amplifier capable of operation on any frequency or frequencies between 24 and 35 MHz. An exception was proposed to this restriction for any licensed amateur operator with a general or higher class license who wished to construct not more than one unit of the same model for use at his licensed amateur radio station.

4. Docket 21117, there were 199 individuals and organizations who filed comments, 3 of whom filed reply comments, 6 of whom filed (and were accepted as) late comments, and 1 who filed and was accepted as a late reply comment. Docket 2118 received 282 comments from various individuals and organizations, 3 of which filed reply comments, 5 of which filed and were accepted for late comments, and 1 which filed and was accepted as a late reply comment. In addition, 11 parties participated in the oral arguments for both dockets with 4 parties filing supplementary comments. While specific references are not generally made to any individual comment, the public is assured that all comments and reply comments were carefully reviewed and considered before reaching our decision in this proceeding.

The Problem

5. During fiscal year 1976, FCC field installations received 80,816 complaints of electromagnetic interference. This interference was primarily to television reception. Of these complaints, 83 percent were associated with the operation of transmitters in the Citizens Band Radio Service. In an attempt to determine the major causes of such interference, a study was conducted by the Commission's Field Operations Bureau in which 72 sample cases were randomly selected and investigated. These sample cases were limited to interference to television reception involving CB transmitter and were selected over several months covering the entire United States in order to insure a random sample. From this study, it was determined that in at least 46 percent of the samples the interference was due to the illegal use of an external radio frequency power amplifier. The study also showed that in fiscal year 1976 a lower bound on the number experiencing interference to television reception associated with the operation of CB stations probably lies somewhere between 1 and 10 million persons with the best estimate being 4 million persons. Projections for fiscal year 1979 are that between 3 and 21 million persons (best estimate—9 million) will experience TVI associated with CB operation.

6. The number of interference complaints being received by the Commission is increasing at an alarming rate, primarily due to the Citizens Band Radio Service and the illegal operation of external amplifiers in that service. The Commission has attempted to deal with the problem of these amplifiers in the past, notably through rule making in Docket 20118 (40 FR 1243, 50 FCC 2d 310) which added a new Section 2.815 to the marketing rules in Part 2. This section prohibited the marketing of any external radio frequency power amplifier capable of being used with a transmitter operating on any frequency or frequencies between 24 and 35 MHz with certain exceptions. These exceptions allowed the continued marketing of these amplifiers operating in this frequency range provided the equipment also had amplification capability over the following frequency ranges: 7000 7300 kHz, 14,000 14,350 kHz, 21 21.45 MHz, and 28 29.70 MHz.

7. Unfortunately, the action in Docket 20118 was ineffective as it was concerned solely with the production of then available single band amplifiers for the CB service and it further was based on the assumptions that amateur equipment would not be used in the CB service. However, almost immediately after the issuance of the Report and Order in that docket, there appeared on the market a device commonly called a "broad-band linear." These devices were marketed ostensibly for use in the Amateur Radio Service and were constructed to meet the strict requirements of our rules, inasmuch as they claimed to provide for operation on the frequency bands specified under our exemption. However, these devices were intended solely for use in the Citizens Band Radio Service and for use by unlicensed operators, contrary to the intent of our rules. In addition, these devices had an even greater potential for interference due to the higher level of spurious emissions which were generated.

8. Docket 21116 was therefore issued in combination with Docket 21117 to close this "loop-hole" in our regulations that permits the manufacture of amplifiers capable of being used with CB equipment. In this regard, the Commission is removing the "loop-hole" in our regulations that allows the manufacture and marketing of amplifiers capable of operation in the frequency range of 24 to 35 MHz. This is being accomplished by amending our regulations, as discussed later in this order and shown in the attached appendix, to prohibit the manufacture, importation, or marketing of any amplifier capable of operation on any frequency or frequencies between 24 and 35 MHz.

9. There are a number of manufacturers and suppliers of external amplifiers that are not complying with the current emission limitations specified in Section 97.73 (Docket 20777, released March 10, 1977, FCC 77-157) of the Commission's Rules, contributing to the interference problem. This section requires an out-of-band emission attenuation of 40 decibels below the mean power of the fundamental without exceeding 50 milliwatts for any 5 watt or higher powered amplifier or transmitter operating below 30 MHz. While this requirement has only recently become effective for amateur transmitters, it has been in effect since April 15, 1977, for all external amplifiers and is retroactive for these amplifiers, regardless of the date of purchase or manufacture. Many of these amplifiers have been tested by our Laboratory Division and, to date, only a few have complied with this requirement.

10. The Commission has decided not to require type acceptance of amateur transmitters at this time as the emission limitations of Section 97.73 have only recently gone into effect for these transmitters. It cannot be demonstrated that such a program would be necessary to reduce their interference potential. However, the external amplifier manufacturers have continued to supply their products for illegal operation in the CB service and for use by unlicensed operators, and; in addition, many have not begun to modify their equipment to meet the new emission standards. For these reasons, the Commission has decided to bring those amplifiers operating below 144 MHz (the 2 meter band) under our type acceptance program for a limited, 3 year period. This requirement will enable the Commission to determine prior to the initial marketing of the equipment whether it meets our technical standards and is intended for use in the Amateur Radio Service. The methods used in this determination will be discussed in detail later in this Order.

Comments Received

11. Many of the comments received in these dockets recommended that the Commission introduce a requirement that a valid amateur license be shown as a prerequisite for purchasing any amateur equipment. Such a proposal is currently before the Commission in a number of petitions for rule-making such as RM-2839 filed by the San Antonio Repeator Organization.

12. No other viable alternatives were proposed in these dockets other than the showing of a license, previously mentioned. While the majority of comments were against both the banning of amplifiers capable of operation between 24 and 35 MHz and the type acceptance of amateur equipment, many stated that they would accept such a requirement if the Commission was sure that it would be effective and if no other viable alternative was available. We are of the opinion that requiring type acceptance for a limited time and banning any amplifiers capable of operation in the above frequency range satisfies both of these requirements. The 3-year time period for type acceptance will allow the Commission the time to investigate other methods of reducing the problems caused by the illegal operation of these amplifiers while still attacking the immediate problem. If at the end of this 3-year period it is determined that the type acceptance requirement is still necessary and that it has indeed reduced the problems caused by these amplifiers, this program can be continued by further Commission action.

Rule Amendments

13. Attached as an appendix are the revised rules which ban the use (under Part 97), manufacture, importation, and marketing of: (1) any external radio frequency power amplifier capable of operation below 144 MHz which has not been type accepted, and (2) any external radio frequency power amplifier capable of operation in the frequency range of 24 to 35 MHz. Many of these rule changes have been placed in Part 2 of the Commission's Regulations. In order to make clear to the public our intent in these revisions, each section is be discussed below.

Section 2.815. This section has been modified to remove the exemption that formerly allowed the marketing of external amplifiers capable of operation in the frequency range of 24 to 35 MHz if amplification capability was also provided in other specified frequency bands. As of the effective date of these regulations, the manufacture, importation, and marketing of any external amplifier capable of operation from 24 to 35 MHz will be prohibited. In addition, the manufacture, importation, or marketing of any amplifier capable of operation below 144 MHz will also be prohibited unless a grant of type acceptance has been issued for that equipment. However, this latter prohibition has been worded to allow the necessary manufacture of a limited number of amplifiers in order to make the tests needed for obtaining a grant of type acceptance. A limited number of amplifiers would be considered to be no more than 10, unless some justification can be submitted to the Commission to demonstrate why it would be necessary to manufacture a larger quantity. (Manufacturers and equipment dealers should also note Paragraph 15 of this Order which details how a waiver of this marketing requirement may be obtained for present inventory.)

While this section prohibits the manufacture of any external amplifier capable of operation below 144 MHz with the exception of those which have been type accepted, this Commission has no intention or preventing the continued manufacture or marketing of external radio frequency power amplifiers designed for Industrial, Scientific, or Medical (ISM) applications. In this regard, the Commission will entertain requests for a waiver of this section from those ISM manufacturers. However, the manufacturers of external amplifiers designed for operation in the Citizens Bank Radio Service or for other illegal applications should note that there are considerable differences between ISM equipment and amateur equipment. There is, therefore, very little chance of one of the manufacturers of these illegal amplifiers obtaining such a waiver. If such a waiver was granted through error, the waiver could be revoked and the manufacturer denied the right to manufacture or market any more of his equipment. This could possibly occur if any amplifier which was manufactured under such a waiver was discovered being used outside of its intended operation.

In addition to the above prohibitions, new Paragraphs (d) and (e) have been added. These paragraphs are designed to allow the licensed amateur radio operator to construct an amplifier (not from a kit which is also required to obtain a grant of type acceptance) which operates in the frequency range of 24 to 35 MHz or in any frequency range below 144 MHz and to market that amplifier to another licensed amateur operator for use at his own amateur station, without regard to the type acceptance requirements or the 24 to 35 MHz frequency ban requirements. However, any construction or modification of this equipment is only allowed if the amateur opera-

tor does the construction or modification, and that amateur operator has a license of the appropriate type which allows him to use such equipment. In addition, the requirements contained in Sections 97.75 and 97.76 of the amateur regulation must be met, and no more than one unit of a particular model amplifier can be constructed or modified in any 1 calendar year without obtaining a grant of type acceptance.

Section 2.983. This section has been amended to exempt the amateur amplifier from most of the required measurements for type acceptance. The only measurements which will be required are for spurious emissions radiated at the antenna terminal and the field strength of the spurious radiations which are emitted from the cabinet. These measurements are incorporated by reference in Section 2.1005 and are contained in Sections 2.991 and 2.993 of the Commission's Regulations.

Section 2.1001. This section has been revised to allow individual licensed amateur radio operators the ability to modify their own equipment without regard to type acceptance provisions. While the modified amplifier will still be required to meet the emission limitations of Section 97.73 and any other technical requirements for the amateur service, the amplifier may be modified in whatever manner the amateur operator desires provided the equipment will only be used at a licensed amateur radio station and further provided that the amateur operator who performs the modification possesses a license of the appropriate type that allows him to use the equipment being modified. Modifications specified by equipment manufacturers or suppliers will not be allowed unless the manufacturer or supplier has obtained the necessary permission from the Commission as detailed in Paragraph (b) or has obtained a new grant of type acceptance incorporating such modifications. In addition, no modification of these amplifiers will be allowed without a new grant of type acceptance or written permission from the Commission, as detailed in Paragraph (b) of this section, if the equipment is not used solely at a specific licensed amateur radio station. Any modifications made in this manner are the responsibility of the station licensee who shall also remain responsible for insuring that this modified equipment will still comply with all of the applicable technical standards in Part 97.

Section 2.1005. A new section has been added to cover the type acceptance requirements of amateur equipment. There are a number of points made in this section which require that each paragraph be discussed:

(a) This paragraph references the appropriate sections under our type acceptance regulations. These sections cover all information pertaining to the grant such as identification of the equipment; reasons for dismissal of the application; changes in the equipment, its identification, or the name of the grantee; FCC inspection; and various other aspects. In addition, the specific test sections are referenced. To obtain a grant of type acceptance for an external amplifier, in addition to the data required by Section 2.983, test results must be submitted in accordance with Section 2.991, the measurement of the spurious emissions at the antenna terminal, and with Section 2.993, the measurement of the field strength of spurious radiations emitted from the cabinet, power leads, and other elements of the amplifier under test.

(b) This paragraph simply states the test parameters for making the spurious emission tests. While many of the received comments stated that to require such tests of amateur equipment would be cost prohibitive, increasing the cost of equipment to the consumer, the Commission is not of this opinion. No piece of radio equipment from any service should be marketed before a number of samples are tested to determine that the equipment is in compliance with our regulations. As these tests should be performed regardless of the requirement for type acceptance, the only additional expense that type acceptance would cost the manufacturer or supplier is the few hours of paperwork to compile the application and the time delay in marketing during which the Commission processes this application.

(c) This paragraph describes the type acceptance procedure for kits, including an example of the required identification label. This material is fairly straightforward and should not require further explanation. However, it should be noted that Section 97.3 (aa) defines an external radio frequency power amplifier kit as any number of electronic parts usually provided with a schematic or printed circuit board which when assembled in accordance with instructions results in an external amplifier, even if additional parts of any type are required to complete the assembly.

(d) This paragraph simply restates the Commission's ability, as defined in Section 2.915(a)(2) of our regulations, to deny a grant of type acceptance, even though the equipment complies with the applicable technical standards, if it is found that to not issue such a grant would serve the public interest, convenience and necessity by preventing the use of these amplifiers in any radio service other than the Amateur Radio Service. The Commission could therefore deny a grant of type acceptance for any amplifier it felt was designed for use by a CB or unlicensed operator. The points which would be considered in making this determination are listed in Section 97.77.

14. In addition to the rule changes in Part 2, a number of changes are also made to Part 97 of the Commission's Regulations. These changes detail how the requirements for type acceptance will affect the individual amateur operator and also specify the technical requirements for type acceptance. As with the discussion of the changes in Part 2, each section will be covered separately.

Section 97.3. This section has been amended to add a definition of an external radio frequency power amplifier and an external radio frequency power amplifier kit.

Section 97.75. This section requires, as of the effective date and for 3 years following that date, that every external radio frequency power amplifier capable of operation below 144 MHz which is used at an amateur radio station be of a type which has received a grant of type acceptance for use under Part 97. However, a number of exemptions to this type acceptance requirement are detailed, all requiring that the equipment be used only at a licensed amateur radio station. Of particular interest should be Subparagraph (a)(2) which states that any external amplifier originally purchased before the effective date may continue to be used without regard to the type acceptance requirement. This would also apply to any amplifier purchased after the effective date from another licensed amateur radio operator or from a dealer who purchased the amplifier used from another licensed amateur radio operator, as long as the amplifier was originally purchased before the effective date. The sale of this equipment is permitted under Section 97.76. However, as previously mentioned, this applies only to those amplifiers in use at an amateur radio station which, by definition, is currently licensed. Any amplifier in use in another radio service is not grandfathered under this clause.

Also of interest in this section should be Subparagraph (a)(6) which states that any amplifier originally purchased after the effective date of these regulations may also be used without regard to the type acceptance requirement if the amplifier was marketed under the marketing waiver explained in Paragraph 16 of this order. As before, this would also apply to any amplifier marketed under this waiver which was purchased after the effective from another licensed amateur radio operator or from a dealer who purchased the amplifier used from another licensed amateur operator. However, this amplifier must still be for use only at a licensed amateur radio station.

While the rest of this Section is fairly self-explanatory, it should be noted that any amplifier purchased from another licensed amateur operator or from a dealer is also exempted from the type acceptance requirement if the amplifier was: (1) modified by another licensed amateur operator who possessed a license of the appropriate type which allowed him to use the equipment being modified, (2) constructed (not from an amplifier kit) by another licensed amateur operator, or (3) constructed by a licensed amateur operator from a kit purchased before the effective date of these regulations. However, all of these exemptions require that the amplifier be used only at a licensed amateur radio station.

It should also be noted that this section limits the construction (not from a kit) or modification of these amplifiers to only one unit of a particular model amplifier per calendar year. Any amplifiers constructed or modified in excess of this limit must be type accepted.

Finally, Paragraph (b) of this section references the Commission's "Radio Equipment List, Equipment Acceptable for Licensing." Any amplifier on this list as being approved for use under Part 97 may be used in the Amateur Radio Service.

Section 97.76. This section requires, as of the effective date and for 3 years following that date, that every external radio frequency power amplifier capable of operation below 144 MHz which is marketed, manufactured, imported or modified for use in the Amateur Radio Service be of a type which has received a grant of type acceptance for use under Part 97. The term "modified for use" does not mean that an amateur operator cannot modify an amplifier that has not been type accepted for use under Part 97. Rather, it means that any amplifier which is modified to be used in the Amateur Radio Service which is then manufactured, marketed or imported for use in that service must also have obtained a grant of type acceptance.

Specific exemptions are listed in this section for the individual amateur operator. As long as the construction (not from a kit) or modification is performed by a licensed amateur operator, this equipment may be sold to another licensed amateur operator for use at his amateur radio station. Any modifications must be performed by an amateur licensee whose license affords him the privileges of using the equipment being modified. This equipment may also be sold to a dealer who, in turn, is required to sell the amplifier to another licensed amateur radio operator for use at his amateur station. While this may sound like requiring the presentation of an amateur license for sale of this amplifier, this is not the case. Sections 2.803 and 2.815 prohibit the marketing of those amplifiers that do not possess a grant of type acceptance. However, the individual amateur operator has essentially been exempted from this requirement, as detailed in this section and Section 97.75. Therefore, as long as the sale is to an amateur radio operator for use at his amateur, there is no violation of our marketing rules. Any sale of this equipment to any other person would be in violation of Sections 2.803 and 2.815 in addition to any other applicable sections of the FCC Regulations. In this regard, it will be the responsibility of the person making the sale, either the dealer or the amateur operator, to determine that the purchaser is qualified to use the amplifier.

As with Section 97.75, particular interest should be given to Subparagraphs (a)(2) and (a)(6). These subparagraphs are explained in the discussion of Section 97.75 and would allow the continued marketing of any amplifier originally purchased before the effective date or purchased after the effective date, subject to the conditions stated in that discussion and these regulations. It should be noted that the construction (not from a kit) or modification of these amplifiers is limited to only one unit of a particular model amplifier per calendar year. Any amplifiers constructed or modified in excess of this limit must be type accepted in order to be marketed.

This section, in combination with Section 97.75 will still allow the amateur operator to construct his own equipment; to modify his equipment, equipment from any other radio service or the equipment of another amateur operator; to service the equipment of another licensed amateur operator; and to construct one unit of a particular model amplifier per calendar year without obtaining a grant of type aceptance provided, in all cases, that the amplifier meets the applicable technical requirements after any of the above changes and the amplifier is for use only at a licensed amateur radio station.

Section 97.77. This section provides the technical standards which an external amplifier must meet before a grant of type acceptance will be issued. The emission limitations specified are those presently in Section 97.73. The decrease from the amount of attenuation originally proposed was done in an attempt to prevent legitimate amateur manufacturers from having to perform a major redesign of their equipment. Rather, the Commission is of the opinion that the licensed amateur operator is quite capable of solving any interference problems which may occur and should, therefore, not have to bear the economic burden that would result if a tighter standard was imposed. In addition, the need for further attenuation has not been demonstrated. While the requirement to attenuate spurious emissions at least 40 decibels below the mean power of the fundamental for operation below 30 MHz will prevent the manufacture of the majority of the "broad-band linears," any amplifier submitted for type acceptance would also have to meet this specification when connected to a transmitter meeting this requirement even if the amplifier is turned off. Testing at our Laboratory Division has shown that some of the so-called "linears" are not capable of this.

Also included in this section are the specifications to demonstrate that the amplifier is not capable of operation on any frequency in the range of 24 to 35 MHz, required by Section 2.815. In order to comply with this requirement, the amplifier shall not be capable of amplifying any input signal in the frequency range of 26 to 28 MHz. In addition, no more than 6 decibels of amplification (mean radio frequency input power versus mean output power of the amplifier) will be allowed in the frequency ranges of 24 to 26 MHz and 28 to 35 MHz.

A list is also given in this section for a number of design features which would normally preclude an amplifier from obtaining a grant of type acceptance. These features are, currently, the major design differences between legitimate amateur equipment and the illegal amplifiers. Amateur transmitters designed for operation below 144 MHz (the 2 meter band) are provided with an external relay contact for use with the external amplifier. This relay contact is used to place the amplifier in the transmit mode; however, such a contact is prohibited on CB transmitters. The manufacturers of illegal amplifiers must therefore provide sensing internal to the amplifier which detects the input radio frequency signal and places the amplifier in the transmit mode. Such internal sensing on any amplifier designed for operation below 144 MHz would disqualify that equipment from receiving a grant of type acceptance, as the sensing would serve no purpose but to increase the initial level of spurious emissions from transients when the amplifier is first keyed.

In addition to the including of internal RF sensing, amplifiers designed for use with a CB transmitter must provide more gain in order to amplify a 4-watt input signal as opposed to the 100-watt signal usually produced by an amateur transmitter. The Commission will then look for the provision of more gain, not power supply limited gain, designed into the amplifier than necessary to operate in the amateur service. While an input signal below which the amplifier would not operate could have been specified, it was felt that such a requirement would be too easy to defeat to have much effect. The requirement that the amplifier be designed to a certain gain limitation would generally require a total redesign of the amplifier for modification. In this regard, the Commission would not accept an amplifier with an attenuation in the input stage, especially a variable attenuation, as this could be used to defeat the purpose of this section. We realize that there are a small number of legitimate manufacturers or QRP (low power) equipment which needs to boost a low level signal of about 4 or 5 watts. The Commission is

aware of these manufacturers and, realizing that they produce amplifiers for this operation in very small quantities, would entertain a request for a waiver of this requirement with certain restrictions dependent on the request.

15. As these rule amendments will become effective 30 days after their date of publication in the FEDERAL REGISTER, a number of marketing problems are expected to develop concerning that equipment still in the manufacturer's or dealer's inventory. As this Commission has no intention of halting the marketing of those amplifiers manufactured prior to the effective date which appear to be designed solely for operation in the Amateur Radio Service, we are prepared to issue a waiver for up to 1 year for this marketing restriction, as specified in Sections 2.815(b), 2.815(c), and 97.76, for specific models of amplifiers. No waiver of these requirements will be issued to any individual or dealer. Rather, the manufacture or importer of this equipment will be required to submit to the Commission's Laboratory Division a sample of each model amplifier and all of the information required for obtaining a grant of type acceptance, as shown in Sections 2.983 and 97.77. The information required in Section 97.77(c) need not be submitted for this waiver request as Section 2.815(b) will not apply for this equipment. In addition to this material, we are also requiring the submission by the manufacturer or importer of the number of units of each model still in inventory, or projected to be in inventory, as of the effective date of these regulations. After the Commission has reviewed all of this material and inspected the amplifier, a waiver of the marketing requirements, as specified above, will be issued for any amplifier which complies with all of the type acceptance requirements, exclusive of Section 97.77(c), and appears to be designed solely for operation in the Amateur Radio Service. However, we wish to emphasize that this waiver will apply strictly to the marketing of those amplifiers or amplifier kits manufactured prior to the effective date of these regulations and will not exempt any equipment from the manufacturing requirements contained in Sections 2.815(b), 2.815(c), and 97.77.

CONCLUSIONS

16. In view of the foregoing, we are of the opinion that the amended rules as described above and in the attached appendix are in the public interest, convenience, and necessity. Authority for these amendments is contained in Sections 4(i), 302, 303(e), 303(f), and 303(r) of the Communications Act of 1934, as amended. Accordingly, it is ordered, effective April 28, 1978, that Parts 2 and 97 of the Commission's Rules and Regulations are amended as set out in the attached appendix. It is further ordered that this proceeding is continued.

(Secs. 4, 303, 48 Stat., as amended, 1066, 1082, Sec. 302, 82 Stat., 290; 47 U.S.C. 154, 302, 303.)

FEDERAL COMMUNICATIONS COMMISSION,*
WILLIAM J. TRICARICO,
Secretary.

APPENDIX

A. Part 2 is amended as follows:

1. Section 2.815 is amended by deleting Paragraphs (b), (c), and (d) and by adding new Paragraphs (b), (c), (d), and (e) to read as follows:

§ 2.815 External radio frequency power amplifiers.

* * * * *

(b) After April 27, 1978, no person shall manufacture, sell or lease, offer for sale or lease (including advertising for sale or lease), or import, ship, or distribute for the purpose of selling or leasing or offering for sale or lease, any external radio frequency power amplifier or amplifier kit capable of operation on any frequency or frequencies between 24 and 35 MHz.

NOTE.—For purposes of this part, the amplifier will be deemed incapable of operation between 24 and 35 MHz if—

(1) The amplifier has no more than 6 decibels of gain between 24 and 26 MHz and between 28 and 35 MHz. (This gain is determined by the ratio of the input RF driving signal (mean power measurement) to the mean RF output power of the amplifier.); and

(2) The amplifier exhibits no amplification (0 decibels of gain) between 26 and 28 MHz.

(c) After April 27, 1978, and until April 28, 1981, no person shall manufacture, sell or lease, offer for sale or lease (including advertising for sale or lease), or import, ship, or distribute for the purpose of selling or leasing or offering for sale or lease, any external radio frequency power amplifier or amplifier kit capable of operation on any frequency or frequencies below 144 MHz unless the amplifier has received a grant of type acceptance in accordance with Subpart J of this part and Subpart C of Part 97 or other relevant Parts of this Chapter. No more than 10 external radio frequency power amplifiers or amplifier kits may be constructed for evaluation purposes in preparation for the submission of an application for a grant of type acceptance.

(d) The proscription in Paragraph (b) of this section shall not apply to the marketing, as defined in that paragraph, by a licensed amateur radio operator to another licensed amateur radio operator of an external radio frequency power amplifier fabricated in not more than one unit of the same model in a calendar year by that operator provided the amplifier is for the amateur operator's personal use at his licensed amateur radio station and the requirements of Sections 97.75 and 97.76 of this chapter are met.

(e) The proscription in Paragraph (c) of this section shall not apply in the marketing, as defined in that paragraph, by a licensed amateur radio operator to another licensed amateur radio operator of an external radio frequency power amplifier if the amplifier is for the amateur operator's personal use at his licensed amateur radio station and the requirements of Sections 97.75 and 97.76 of this chapter are met.

2. Section 2.983 is amended by adding a new Paragraph (i) to read as follows:

§ 2.983 Application for type acceptance.

* * * * *

(i) The application for type acceptance of an external radio frequency power amplifier under Part 97 of this chapter need not be accompanied by the data required by Paragraph (e) of this section. In lieu thereof, measurements shall be submitted to show compliance with the technical specifications in Subpart C of Part 97 of this chapter and such information as required by Section 2.1005 of this part.

3. Section 2.1001 is amended by revising the text of Paragraph (e) and adding a new Paragraph (f) to read as follows:

§ 2.1001 Changes in type accepted equipment.

* * * * *

(e) Users shall not modify their own equipment except as provided by Paragraphs (b) and (f) of this section.

(f) Equipment type accepted for use in the Amateur Radio Service pursuant to the requirements of Part 97 of this chapter may be modified without regard to the conditions specified in Paragraph (b) of this section, provided the following conditions are met:

(1) Any person performing such modifications on equipment used under Part 97 of this chapter must possess a valid amateur radio operator license of the class required for the use of the equipment being modified.

(2) Modifications must pursuant to this paragraph be limited to equipment used at licensed amateur radio stations.

(3) Modifications specified or performed by equipment manufacturers or suppliers must be in accordance with the requirements set forth in Paragraph (b) of this section.

(4) Modifications specified or performed by licensees in the Amateur Radio Service on equipment other than that at specific licensed amateur radio stations must be in accordance with the requirements set forth in Paragraph (b) of this section.

(5) The station licensee shall be responsible for insuring that modified equipment used at his station will comply with the applicable technical standards in Part 97 of this chapter.

4. A new § 2.1005 is added to read as follows:

§ 2.1005 Equipment for use in the Amateur Radio Service.

(a) The general provisions of Sections 2.981, 2.983, 2.991, 2.993, 2.997, 2.999, 2.1001, and 2.1003 shall apply to application for and grants of type acceptance for equipment operated under the requirements of Part 97 of this chapter, the Amateur Radio Service.

(b) When performing the tests specified in Sections 2.991 and 2.993 of this part, the center of the transmitted bandwidth shall be within the operating frequency band by an amount equal to 50 percent of the bandwidth utilized for the tests. In addition, said tests shall be made on at least one frequency in each of the bands within which the equipment is capable of tuning.

(c) Any supplier of an external radio frequency power amplifier kit as defined by Subsection 97.3(aa) of this chapter shall comply with the following requirements:

(1) Assembly of one unit of a specific type shall be made in exact accordance with the instructions being supplied with the product being marketed. If all of the necessary components are not normally furnished with the kit, assembly shall be made using the recommended components.

(2) The measurement data required for type acceptance shall be obtained for this unit and submitted with the type acceptance application. Unless otherwise requested, it is not necessary to submit this unit with the application.

(3) A copy of the exact instructions which will be provided for assembly of the equipment shall be provided in addition to other material required by Section 2.983 of this part.

(4) The identification label required by sections 2.925 and 2.1003 of this part shall be permanently affixed to the assembled unit and shall be of sufficient size so as to be easily read. The following information shall be shown on the label:

(Name of Grantee of Type Acceptance)

FCC ID: (The number assigned to the equipment by the Grantor)

This amplifier can be expected to comply with part 97 of the FCC Regulations when assembled and aligned in strict accordance with the instruction manual using components supplied with the kit or an exact equivalent thereof.

____
(Title and signature of responsible representative of Grantee)

STATEMENT OF COMPLIANCE

I state that I have constructed this equipment in accordance with the instruction manual and using the parts furnished by the supplier of this kit.

____
(Signature) (Date)

____
(Amateur call sign) (Class of license)

____
(Expiration date of license)

(To be signed by the person responsible for proper assembly of kit.)

(5) If requested, an unassembled unit shall be provided for assembly and test by the Commission. Shipping charges to and from the Commission's Laboratory shall be borne by the applicant for type acceptance.

(d) Type acceptance of external radio frequency power amplifiers and amplifier kits may be denied when denial serves the public interest, convenience, and necessity by preventing the use of these amplifiers in services other than the Amateur Radio Service. Other uses of these amplifiers, such as in the Citizens Band Radio Service, is prohibited (section 95.509 of this Chapter). Examples of features which may result in the denial of type acceptance are contained in section 97.77 of this Chapter.

B. Part 97 is amended as follows:

1. In § 97.3, new definitions of external radio frequency power amplifier and external radio frequency power amplifier kit are added as new paragraphs (z) and (aa), as follows:

§ 97.3 Definitions.

* * * * *

(z) *External radio frequency power amplifier.* Any device which, (1) when used in conjunction with a radio transmitter as a signal source, is capable of amplification of that signal, and (2) is not an integral part of the transmitter as manufactured.

(aa) *External radio frequency power amplifier kit.* Any number of electronic parts, usually provided with a schematic diagram or printed circuit board, which, when assembled in accordance with instructions, results in an external radio frequency power amplifier, even if additional parts of any type are required to complete assembly.

§ 97.75 [Redesignated]

2. § 97.75 is redesignated § 97.74.

3. A new § 97.75 is added, as follows:

§ 97.75 Use of external radio frequency (RF) power amplifiers.

(a) Until April 28, 1981, any external radio frequency (RF) power amplifier used or attached at any amateur radio station shall be type accepted in accordance with subpart J of part 2 of the FCC's Rules for operation in the Amateur Radio Service, unless one or more of the following conditions are met:

(1) The amplifier is not capable of operation on any frequency or frequencies below 144 MHz;

(2) The amplifier was originally purchased before April 28, 1978;

(3) The amplifier was—

(i) Constructed by the licensee, not from an external RF power amplifier kit, for use at his amateur radio station;

(ii) Purchased by the license as an external RF power amplifier kit before April 28, 1978, for use at his amateur radio station; or

(iii) Modified by the licensee for use at his amateur radio station in accordance with § 2.1001 of the FCC's Rules;

(4) The amplifier was purchased by the licensee from another amateur radio operator who—

(i) Constructed the amplifier, but not from an external RF power amplifier kit;

(ii) Purchased the amplifier as an external RF power amplifier kit before April 28, 1978, for use at his amateur radio station; or

(iii) Modified the amplifier for use at his amateur radio station in accordance with § 2.1001 of the FCC's Rules;

(5) The external Power amplifier was purchased from a dealer who obtained it from an amateur radio operator who—

(i) Constructed the amplifier, but not from an external RF power amplifier kit;

(ii) Purchased the amplifier as an external RF power amplifier kit before April 28, 1978, for use at his amateur radio station; or

(iii) Modified the amplifier for use at his amateur radio station in accordance with § 2.1001 of the FCC's Rules; or

(6) The amplifier was originally purchased after April 27, 1978, and has been issued a marketing waiver by the FCC.

(b) A list of type accepted equipment may be inspected at FCC headquarters in Washington, D.C., or at any FCC field office. Any external RF power amplifier appearing on this list as type accepted for use in the Amateur Radio Service may be used in the Amateur Radio Service.

NOTE.—No more than one unit of one model of an external RF power amplifier shall be constructed or modified during any calendar year by an amateur radio operator for use in the Amateur Radio Service without a grant of type acceptance.

4. A new § 97.76 is added, as follows:

§ 97.76 Requirements for type acceptance of external radio frequency (RF) power amplifiers and external radio frequency power amplifier kits.

*See attached Statement of Commissioner White.

(a) Until April 28, 1981, any external radio frequency (RF) power amplifier or external RF power amplifier kit marketed (as defined in § 2.815), manufactured, imported, or modified for use in the Amateur Radio Service shall be type accepted for use in the Amateur Radio Service in accordance with subpart J of part 2 of the FCC's Rules. This requirement does not apply if one or more of the following conditions are met:

(1) The amplifier is not capable of operation on any frequency or frequencies below 144 MHz;

(2) The amplifier was originally purchased before April 28, 1978, by an amateur radio operator for use at his amateur radio station;

(3) The amplifier was constructed or modified by an amateur radio operator for use at his amateur radio station in accordance with § 2.1001 of the FCC's Rules;

(4) The amplifier was constructed or modified by an amateur radio operator in accordance with § 2.1001 of the FCC's Rules and sold to another amateur radio operator or to a dealer;

(5) The amplifier was constructed or modified by an amateur radio operator in accordance with § 2.1001 of the FCC's Rules and sold by a dealer to an amateur radio operator for use at his amateur radio station; or

(6) The amplifier was manufactured before and has been issued a marketing waiver by the FCC.

(b) No more than one unit of one model of an external RF power amplifier shall be constructed or modified during any calendar year by an amateur radio operator for use in the Amateur Radio Service without a grant of type acceptance.

(c) A list of type accepted equipment may be inspected at FCC headquarters in Washington, D.C., or at any FCC field office. Any external RF power amplifier appearing on this list as type accepted for use in the Amateur Radio Service may be marketed for use in the Amateur Radio Service.

§ 97.77 [Redesignated]

5. § 07.77 in subpart D is redesignated § 97.78.

6. A new § 97.77 is added at the end of subpart C, as follows:

§ 97.77 Standards for type acceptance of external radio frequency (RF) power amplifiers and external radio frequency power amplifier kits.

(a) An external radio frequency (RF) power amplifier or external RF power amplifier kit will receive a grant of type acceptance under this part only if a grant of type acceptance would serve the public interest, convenience, or necessity.

(b) To receive a grant of type acceptance under this part, an external RF power amplifier shall meet the emission limitations of § 07.73 when the amplifier is—

(1) Operated at its full output power;

(2) Placed in the "standby" or "off" positions, but still connected to the transmitter; and

(3) Driven with at least 50 watts mean radio frequency input power (unless a higher drive level is specified).

(c) To receive a grant of type acceptance under this part, an external RF power amplifier shall not be capable of operation on any frequency or frequencies between 24.00 MHz and 35.00 MHz. The amplifier will be deemed incapable of operation between 24.00 MHz and 35.00 MHz if—

(1) The amplifier has no more than 6 decibels of gain between 24.00 MHz and 26.00 MHz and between 28.00 MHz and 35.00 MHz. (This gain is determined by the ratio of the input RF driving signal (mean power measurement) to the mean RF output power of the amplifier); and

(2) The amplifier exhibits no amplification (0 decibels of gain) between 26.00 MHz and 28.00 MHz.

(d) Type acceptance of external radio frequency power amplifiers or amplifier kits may be denied when denial serves the public interest, convenience, or necessity by preventing the use of these amplifiers in services other than the Amateur Radio Service. Other uses of these amplifiers, such as in the Citizens Band Radio Service, is prohibited (section 95.509). Examples of features which may result in dismissal or denial of an application for type acceptance of an external RF power amplifier include, but are not limited to, the following:

(1) Any accessible wiring which, when altered, would permit operation of the amplifier in a manner contrary to the FCC's Rules;

(2) Circuit boards or similar circuitry to facilitate the addition of components to change the amplifier's operating characteristics in a manner contrary to the FCC's Rules;

(3) Instructions for operation or modification of the amplifier in a manner contrary to the FCC's Rules;

(4) Any internal or external controls or adjustments to facilitate operation of the amplifier in a manner contrary to the FCC's Rules.

(5) Any internal radio frequency sensing circuitry or any external switch, the purpose of which is to place the amplifier in the transmit mode;

(6) The incorporation of more gain in the amplifier than is necessary to operate in the Amateur Radio Service. For purposes of this paragraph, an amplifer must meet the following requirements:

(i) No amplifier shall be capable of achieving designed output (or designed d.c. input) power when driven with less than 50 watts mean radio frequency input power;

(ii) No amplifier shall be capable of amplifying the input RF driving signal by more than 13 decibels. (This gain limitation is determined by the ratio of the input RF driving signal (mean power) to the mean RF output power of the amplifier.) If the amplifier has a designed d.c. input power of less than 1,000 watts, the gain allowance is reduced accordingly. For example, an amplifier with a designed d.c. input power of 500 watts shall not be capable of amplifying the input RF driving signal (mean power measurement) by more than 10 decibels, compared to the mean RF output power of the amplifier);

(iii) The amplifier shall not exhibit more gain than permitted by paragraph (d)(6)(ii) of this section when driven by a radio frequency input signal of less than 50 watts mean power; and

(iv) The amplifer shall be capable of sustained operation at its designed power level.

(7) Any attenuation in the input of the amplifer which, when removed or modified, would permit the amplifier to function at its designed output power when driven by a radio frequency input signal of less than 50 watts mean power.

STATEMENT OF COMMISSIONER WHITE CONCURRING IN PART AND DISSENTING IN PART

IN RE: THE COMMISSION'S DECISION TO PROHIBIT THE SALE OF POWER AMPLIFIERS CAPABLE OF OPERATION ON ANY FREQUENCY FROM 24 TO 35 MHZ

The Commission in its Report and Order has adopted rules which require both type acceptance of amplifiers capable of operation below 144 MHz and a ban of linear power amplifiers capable of operation on any frequency between 24 and 35 MHz. The type acceptance proposal is all that is necessary, at this time, to effectuate the Commission's prohibitions regarding the manufacture, marketing, importation, and use of linear amplifiers which are capable of being used illegally with CB sets. The majority, by imposing a ban in addition to type acceptance, which itself is in effect a ban on the sale of illegal power amplifiers, has instituted additional regulations where none are necessary, i.e., the Commission is guilty of regulatory overkill. Therefore, as a strong proponent of deregulation, I must dissent to that part of the Commission's decision which imposes a ban on the sale of linear power amplifiers.

The Commission by imposing a ban is trying to help solve the problem of TV interference. I too wish to see this problem solved, but there is no evidence that the imposition of a ban will solve the TV interference problem. A study by the Field Operations Bureau showed that linear amplifiers were associated with approximately 45 percent of all CB-TV interference cases.[1] But the use of linear amplifiers with CB sets is already illegal. There is ample evidence that those who are intent upon breaking the law will continue to do so and that those who wish to circumvent the ban will find ways to do so. The type acceptance proposal, in effect, would ban the manufacture of linear amplifiers capable of being coupled to the low-level output power of a CB set. The proposed type acceptance program would not prohibit the manufacture of linear amplifiers capable of being coupled to amateur or other legitimate types of equipment with much higher output power levels. The proposed ban adds another layer of regulation with no evidence that the proposed type acceptance program alone would not be as effective.

The Commission by its proposed ban would remove equipment from the market which is available to amateurs and others who are not the cause of the problem. In fact, amateurs have assisted the Commission in its enforcement problems both in policing their own ranks and in uncovering the illegal use of CB since that the latter can be disruptive of their own service. The ban also will remove linear amplifiers in the 24 to 35 MHz frequency range from the product lines of the legitimate manufacturers and perhaps cause economic harm to small manufacturers and retailers. The Commission has intruded into the marketplace with an unnecessary ban for a purpose admitted by the staff to be largely cosmetic in nature. But the Commission, when asked about TV interference, proudly can say: "See what we have done."

[1] "The Extent and Nature of Television Reception Difficulties Associated with CB Radio Transmissions," FCC/FOB/PD&E 77-02, July 1977.

Social Events

MEADVILLE PA
MAY 6

The 4th Annual Northwestern Pennsylvania Hamfest will be held on May 6th at the Crawford County Fairgrounds, Meadville PA. Gates open at 8:00. $2 prize ticket required for admission—$1 to display. Children free. Hourly door prizes; refreshments; commercial displays welcome. Indoors if rain. Talk-in on 04/64 and 52. Details: CARS, PO Box 653, Meadville PA 16335.

JOHNSON CITY NY
MAY 6

The Southern Tier Amateur Radio Clubs take pleasure in announcing their 19th annual hamfest and dinner. This gala affair will occur on May 6, 1978, at the Lutheran Fellowship Recreation Center, Johnson City, New York, 3.7 miles north of NY Route 17, exit 71N on Stella Ireland Road. There will be 4 acres of flea market parking, technical talks, prizes, displays, exhibits, refreshments, etc. Tickets are $2 for general admission, $7 for the banquet (includes general admission). No extra charge for flea market parking. Inside tables are available for $5 each by reservation only. Additional information or tickets can be obtained by writing STARC, PO Box 11, Endicott NY 13760.

HOWARD COUNTY MD
MAY 7

The Potomac Area VHF Society will hold its seventh annual hamfest on Sunday, May 7, 1978, from 8 am to 5 pm at the Howard County Fairgrounds approximately 25 miles north of Washington DC, and 15 miles west of Baltimore, Maryland, at the intersection of I-70 and Maryland Route 32. Registration of $3 includes flea market or tailgate sales. Professional food and beverage catering and unlimited parking will be available. Talk-in on 146.52. For further information, contact Paul H. Rose WA3NZL, 25116 Oak Drive, Damascus MD 20750.

LOGANSPORT IN
MAY 7

The Cass County Amateur Radio Club hamfest will be held on Sunday, May 7, 1978, from 7:00 am to 4:00 pm at the 4-H fairgrounds. Go north of Logansport on Highway 25 approximately one mile, turn right, and follow the QSY signs. Advance tickets are $1.50; tickets will be $2.00 at the gate. Outside setup is free, undercover $1.00. Bring your own tables. Talk-in on 146.52 and the Logansport repeater 147.78/.18. For information, write to Dave Rothermel K9DVL, RFD 4, Box 146 G, Logansport, Indiana 46947.

BROWNFIELD TX
MAY 7

The Terry County Amateur Radio Club will hold its annual swapfest on May 7, 1978, in the National Guard Armory, Brownfield, Texas. For more information, contact Viola Simmons W5FBM, 1603 East Tate, Brownfield, Texas 79316.

LAS VEGAS NV
MAY 12-14

The 23rd Annual West Coast VHF Conference will be held at the Stardust Hotel, Las Vegas Strip at Convention Center Drive.

Conference highlights: technical program arranged by the San Bernardino Microwave Society, hospitality room, informal technical and operating sessions, noise figure measurements contest, antenna gain measurements contest, prize drawing, 24-hour adult entertainment! World-famous resort hotel with all facilities. Look for the Stardust sign east of I-15. Take the Sahara Ave. or Dunes-Flamingo exit. Advance registration fee is $4.00 per person ($5.00 at the door). Make checks payable to: West Coast VHF Conference, 510 South Rose St., Las Vegas NV 89106.

VANCOUVER WA
MAY 13-14

On May 13-14, the Clark

County Amateur Radio Club will hold its annual Ft. Vancouver Hamfair, and everyone is invited to join in the fun. It is held at the Clark County Fairgrounds right off Interstate 5, just north of Vancouver, Washington. Registration is $3 per person, and anyone who preregisters by May 5th will get an extra drawing ticket. The prizes are too many to list, but the grand prize will be a Kenwood TS-820S transceiver. Dinner will be catered and will cost $4.25 for adult meal tickets and $2.00 for children under 12 years. A pancake breakfast will by served on Sunday for donations only. There will be activities for hams and families all weekend. Camping with electricity is available for $2.50 per night. Everything from technical seminars to women's and children's activities to a huge swap and shop will be going on all weekend. Make checks payable to Ft. Vancouver Hamfair for registration and dinner tickets. Mail to Jack Ellis K7SUQ at 9610 SE 6th St., Vancouver WA 98664.

DEERFIELD NH
MAY 13

The Hosstraders net will hold its fifth annual tailgate swapfest Saturday, May 13, at the Deerfield, New Hampshire, fairgrounds (covered building in case of rain). Admission is one dollar; no commission or percentage. Commercial dealers are welcome at the same rate. Excess revenues benefit Boston Burns Unit of the Shriners' Hospital for Crippled Children. Last year we donated $430.80. Talk-in on .52, 146.40-147.00, 3940 kHz. If you have questions, send SASE to Joe Demasco K1ROG, Star Rt., Box 56, Bucksport ME 04416 or Norm Blake WA1IVB, PO Box 32, Cornish ME 04020 or check the Hosstraders net on Sundays at 4 pm on 3940 kHz.

EASTON MD
MAY 14

The fourth annual Easton Amateur Radio Society hamfest will be held on May 14, rain or shine, from 10 am to 4 pm. The location will be 5 miles north of Easton, on Rte. 50 at the Talbot County Agricultural Center. From the Baltimore or Washington DC areas, go across the Chesapeake Bay Bridge and follow Rte. 50 east for 21 miles from the bridge. The exact location is between mile markers 60 and 61. There will be hamfest signs on Rte. 50, north and south. Talk-in on 52 and 146.445/147.045 repeater in Cambridge. There will be some tables, both inside and outside, and fairly priced refreshments. Lots of room for tables and tailgaters. Donation is $2, with an additional $2 for tables or tailgaters. Write Robert L. Roberts, Jr. K3ONU, PO Box 781, Easton MD 21601, or phone (301)-822-0943 after 6 pm.

WAUKESHA WI
MAY 14

The spring swapfest of the Milwaukee UHF Society will be held on Sunday, May 14, 1978, at the Waukesha County Expo Center. Starting time is 7:00 am. Indoor space is available on an advanced reservation basis at $3.00 per table. Admission to the grounds is $1.50 in advance, $2.00 at the gate. There will be prizes, beer, and brats! Directions: I-94 to Waukesha Co. F, south to FT, west to Expo. For information, write to Swapfest, PO Box 49, North Prairie, Wisconsin 53153.

WEST LIBERTY OH
MAY 14

The Champaign Logan Amateur Radio Club, Inc., will hold its annual hamfest on Sunday, May 14, 1978, at the West Liberty Lions Park, West Liberty, Ohio. Free admission; trunk sales; tables are $1.00. Door prizes. Talk-in on 146.52.

WARMINSTER PA
MAY 14

The Warminster Amateur Radio Club's fourth annual "HAMMART," flea market, and auction will be held on Sunday, May 14, from 9 am to 4 pm at William Tennent Senior High School, Street Road (Route 132), 2 miles east of York Road (Route 263), Warminster, Bucks County PA. Registration is $1.00, tailgating $2.00 additional. No indoor selling; bring your own tables. Talk-in on 146.16-76 and 146.52. For further information, write: Horace Carter K3KT, 38 Hickory Lane, Doylestown PA 18901 or call (215)-345-6816.

BENSENVILLE IL
MAY 20

The Radio Amateur Megacycle Society of Chicago will sponsor its second annual VHF antenna gain measuring contest on Saturday, May 20. The starting time is 1 pm. It will be held on the grounds of the Flick-Reedy Corporation, at Thorndale and York Roads in Bensenville, just northwest of Chicago. Antenna categories will include 2 meters, 1¼ meters, and 430 and 446 MHz. Antennas for higher bands may be measured, but advance notice must be given to assure that proper equipment is provided. Certificates stating the antenna's gain will be awarded for each entry, and prizes will be awarded for the highest gain antenna in each category. A donation of 50 cents per antenna will be requested to help defray costs of certificates, etc. A detailed information sheet, including directions, is available from Joe LeKostaj WB9GOJ, 2558 N. McVicker Ave., Chicago, Illinois 60639.

CADILLAC MI
MAY 20

The Wexaukee ARA will hold its 18th annual swap and shop on Saturday, May 20th, from 9 am until 4 pm at the National Guard Armory, 415 Haynes St., Cadillac, Michigan. Tickets will be $2.00. Free parking will be available, and there will be a lunch counter. Talk-in on 146.37/97. Ham pilots can fly in to our beautiful airport and community. Transportation to and from the armory provided free.

DURHAM NC
MAY 20-21

The Durham FM Association will hold the 5th annual "Durhamfest" on Saturday, May 20, and Sunday, May 21, 1978, at the South Square Shopping Center in Durham, North Carolina. Seminars have been arranged to cover a broad range of topics from microprocessors and slow scan television to TVI prevention, along with getting started in ham radio.

WABASH IN
MAY 21

The Wabash County Amateur Radio Club's 10th annual hamfest will be held on Sunday, May 21, 1978, rain or shine, at the Wabash County 4-H fairgrounds in Wabash. Large flea market (no table or setup charge), technical forums, bingo, free parking, and lots of good food at reasonable prices. Advance admission is $2.00; $2.50 at the gate. Children under 12 free. Write Dave Nagel WD9BDZ, 555 Valley Brook Lane, Wabash IN 46992.

SANDUSKY OH
MAY 21

The Vacationland Hamfest will be held Sunday, May 21, 1978, at the Erie County Fairgrounds, Sandusky, Ohio. Come rain or shine. There will be tables indoors and 8 acres for trunk sales. Talk-in on 146.52 simplex. Admission will be $1.50 in advance, $2.00 at the gate. Write to the Erie Amateur Radio Society, PO Box 2037, Sandusky OH 44870.

LAWRENCE KS
MAY 21

The Douglas County Amateur Radio Club will hold its third annual auction on Sunday, May 21, at the Douglas County 4-H Fairgrounds, Building 21. Doors open at 9 am, with the auction starting at 1 pm. Door prizes and refreshments. Talk-in on 16/76 and 52. For more information, write to Joan Soutar WB0YPW, 1919 Melholland, Lawrence KS 66044.

TRENTON TN
MAY 21

The annual Humboldt Amateur Radio Club hamfest will be held on Sunday, May 21, at Shady Acres City Park in Trenton, Tennessee. There will be a flea market, prizes, ladies' activities, and light lunches. Talk-in on 37/97. For further information, contact Ed Holmes W4IGW, 501 N. 18th Ave., Humboldt TN 38343.

PITTSBURGH PA
MAY 21

The 24th annual Breeze Shooters' hamfest will be held Sunday, May 21, 1978, at White Swan Park, Parkway West (Rt. 60), near the Greater Pittsburgh International Airport. There will be six main prizes, women's prizes, a home brew contest, refreshments, and an amusement park for the harmonics (discount ride tickets available at hamfest). It's western Pennsylvania's largest ham event. Admission, flea market, and parking are free! Talk-in on 29.0 and 28/88. Contact Richard Evanuik WA3LUM, 311 Evergreen Ave., Pittsburgh PA 15209, for information.

EVANSVILLE IN
MAY 21

The Tri-State Amateur Radio Society will hold its annual hamfest on Sunday, May 21, 1978. The location is the Vanderburgh County 4-H Fairgrounds north of Evansville, Indiana. Good food, bingo, and a large flea market for all. Two grand prizes to be given away. No admission fee. Come join the fun! For more information, write to Steve Harris WB9OYD, R 2, Box 81G, Mt. Vernon IN 47620. Talk-in on 75/15, 19/79, or 52.

IRVINGTON NJ
MAY 21

The Irvington Radio Amateur Club—K2GQ—will hold its annual hamfest on Sunday, May 21, 1978. It will be from 9 am till 4 pm at the P.A.L. Building, 285 Union Ave., Irvington NJ 07011, located at exit 143 north and 143A south on the Garden State Parkway. Talk-in on 146.34/94 and 52. Refreshments and prizes. Table rental will be $3.00. Contact Peter Kawonczyk WB2FAS at the above address or Ed WA2MYZ at (201)-687-3240 evenings.

Dave Ingram K4TWJ
Eastwood Village #1201 S.
Rt. 11 Box 499
Birmingham AL 35210

What Happened To SSTV?

—is it dead or alive?

One of the most exciting new areas of amateur radio communication today is the dimension of slow scan television. No other mode can offer such unique avenues to enjoyment as this window on the world for amateur radio. As the science fiction-type sounds of SSTV are heard on the high-frequency bands, hundreds of amateurs exchange pictures with other slow scanners on a person-to-person basis, view pictures of Mars while they are transmitted from mission control, contact foreign amateurs and get a video tour of their city, or receive schematics of new items directly from their designer. The applications of SSTV are, like its distance limitations, endless.

Other pictures rolling down an SSTV monitor screen can range from weather satellite pictures that are being retransmitted by a slow scanner with satellite equipment, scenes of an African sunset, and views of wild parrots in Nicaragua to pictures of historical places in the west or scenes of an exotic island in the Pacific. Video capabilities definitely expand horizons for today's radio amateurs!

What SSTV Is – and Isn't

As conventional television uses fast scanning rates and includes large quantities of video information (called picture elements, or pixels), it must be transmitted on ultrahigh frequencies where the necessary frequency spectrum (approximately 4 MHz) is available. Slow scan TV, however, is composed of simple audio tones which can be transmitted using conventional single sideband gear. This narrow bandwidth television (approximately 1100 Hz) is accomplished by reducing scanning rates approximately 1,000 times and lowering pixel counts.

As shown in Fig. 1, the range of frequencies used in SSTV are from 1200 Hz to 2300 Hz. 1200 Hz horizontal and vertical sync pulses are used to initiate the scanning of each line and the start of each picture. They are separated according to their time periods. Horizontal sync pulses are five milliseconds duration each 66 milliseconds, while vertical sync pulses are 60 milliseconds each 8 seconds. This comprising situation produces 120-line pictures which require 8 seconds for transmission. The resultant pictures, which are a series of stills, are then viewed on an extended readout cathode ray tube (radar type). (One of SSTV's latest innovations, the digital scan converter, allows SSTV pictures to be continuously viewed on a regular TV set. Newly developed digital techniques also permit these converters to store and

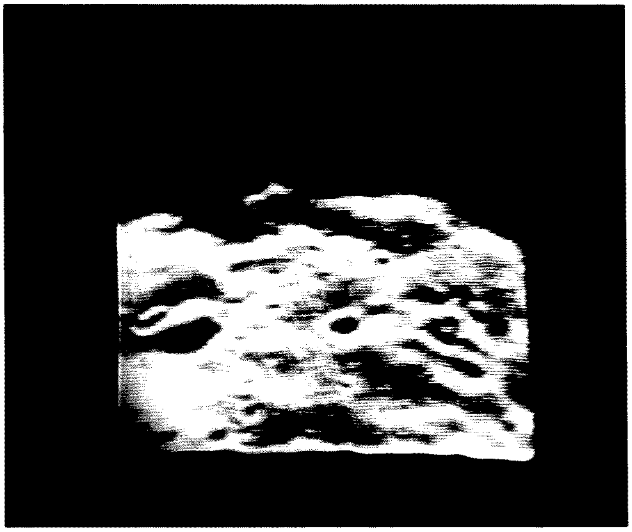

Classic SSTV picture of Phobos, the second moon of Mars. This picture was received at Jet Propulsion Lab as Viking 6 passed within 500 miles of Phobos while en route to Mars. The picture was then retransmitted on SSTV to amateurs around the world by N6V. Picture aspect is approximately 8 miles wide. The large crater on the left is .8 miles wide.

This scene of a neighborhood street was transmitted on 20 meters SSTV by XE2JSC in Mexico City. Late afternoon sun shaded the right side of the picture. The bottom line is a 5-step grey scale.

reconstruct consecutive pictures, thus producing limited motion SSTV.)

Although basic slow scan TV isn't an extremely high-resolution full-motion system, it serves an extremely unique purpose. It allows amateurs to actually view the people they contact, a capability that was previously only a dream.

SSTV for the Existing Amateur Setup

The interconnection of slow scan gear to an amateur station is quite simple, and the necessary time from carton to contact is a leisurely evening's activity. If you know how to connect the components of a stereo system, then you can easily wire an SSTV setup. The SSTV monitor merely plugs into a rig's speaker jack while the camera connects to the mike jack. Most SSTV units incorporate a switching arrangement which allows either the microphone or SSTV camera to drive the transmitter's audio input. Preliminary adjustments for contrast and brightness take only a few minutes, and you're ready for video fun!

As several manufacturers include their camera's power supply and video switching inside their SSTV monitor, I suggest you start with units of the same brand. The same goes for their fast scan viewfinders. Later, you can add your own personal touches.

If you like to build your own gear, you'll be glad to learn that most of the presently popular circuits are available on printed circuit boards from various SSTVers. The best way to learn what's available and who's producing boards is by inquiring during the SSTV net which meets each Saturday at 1800 GMT on 14,230 kHz. The gang welcomes newcomers and is always anxious to help with information or problems.

Understanding SSTV Gear

The popular misconception that slow scan television is complicated and expensive is inaccurate. The cash outlay for a commercially manufactured setup is approximately the same as that required for a synthesized 2 meter rig. Amateurs interested in a less expensive method can home brew their SSTV gear, and the total investment will range from 50 to 150 dollars.

There are presently three common types of SSTV gear: P7 cathode ray tube monitors, fast scan sampling cameras, and digit scan converters. As the basic operation associated with any of these units employs similar concepts, a brief description of each one follows.

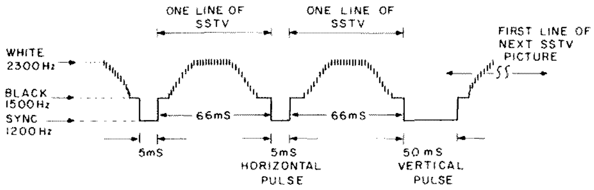

Fig. 1. Format of signals used in SSTV.

P7 Monitors

The functional diagram of a typical P7 monitor is shown in Fig. 2. Incoming SSTV tones are initially applied to a limiter/amplifier, where they are clipped of amplitude variations (noise pulses, etc.) and amplified to a usable level. This signal is then applied to the sync and video detectors. The video detector is simply a tuned circuit which is resonant at 2300 Hz, thus its output level is determined by the frequency of incoming tones. This voltage is boosted by 2 or 3 video amplifiers (these are actually dc amplifiers, similar to the type used in a receiver's S-meter circuitry) and applied to the picture tube as video modulation.

During this same time, the sync selector (another tuned circuit that's resonant at 1200 Hz) passes sync pulses to the 15 Hz amplifier and vertical timing circuit. The 15 Hz amplifier boosts incoming pulses so they can trigger the horizontal sweep generator, while the vertical's dc amplifier boosts its pulses so they can trigger the vertical sweep generator. The vertical timing circuit merely assures that short, rapidly occurring horizontal sync pulses aren't mistaken for long, slowly occurring vertical sync pulses. When the sweep generators are triggered by sync pulses, they produce sawtooth waves which sweep the monitor's screen. The overall results are that brightness variations modulating the picture tube's beam are placed at appropriate points on the screen by deflection circuitry, thus reproducing the SSTV picture. Although specific monitor designs may vary,

SSTV picture of a New England snowfall in the early months of 1977. This picture was received on 20 meters during adverse band conditions.

CQ as received from ON4DN in Belgium during a yearly SSTV contest.

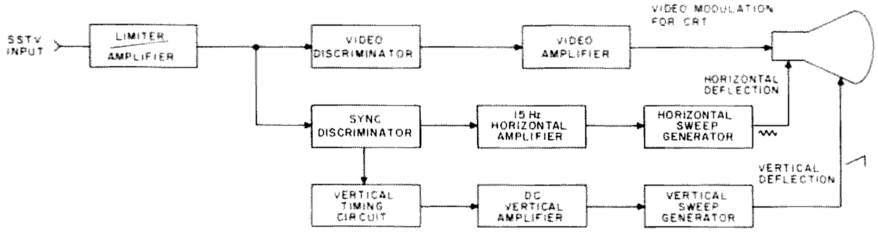

Fig. 2. Functional diagram of typical P7 monitor.

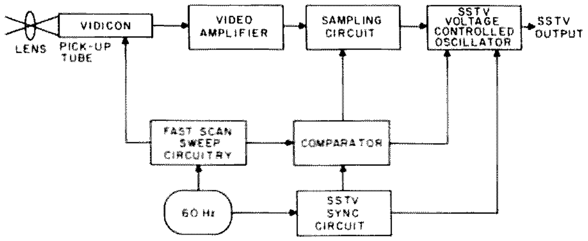

Fig. 3. Functional diagrams of sampling camera.

their functional concepts are similar to the previous description.

Sampling Cameras

Basically, sampling cameras employ fast scan circuitry to operate their vidicon tube, and specific parts of each vertical scan are used to produce each horizontal line of slow scan. Approximately 128 of these line-generating operations are required to produce an SSTV picture.

Referring to Fig. 3, the vidicon, which is being operated by the fast scan sweep circuitry, outputs to the video amplifier. Next, the sampling circuit selects specific picture elements and directs them to the SSTV oscillator. Operation of the sampler is being controlled by a comparator circuit. This comparator simply decides when the fast and slow scan sweeps are at the proper locations, and sends an enable pulse to the sampler at that time. Output samples are varying voltages which shift the voltage controlled oscillator, thus generating SSTV. At the end of each slow scan line, the SSTV sync circuitry shifts the voltage controlled oscillator to a specific voltage level (output frequency), thus inserting sync pulses. A full SSTV picture is produced after approximately 128 of these operations. Sampling techniques aren't as complex as they may seem. Integrated circuits are used to perform specific functions, and we merely let them do their thing. The previously discussed voltage controlled oscillator, for example, may be an inexpensive IC (NE555) which simply plugs in and produces a tone, its exact frequency being controlled by the voltage applied to it.

Digital Scan Converters

In the same manner that two modes, transmit and receive, are used for radio communications, there are also two modes of digital scan conversion: fast to slow and slow to fast. Both of these modes use the same basic concept of converting incoming video to digitalized equivalents and accelerating or decelerating them approximately 1,000 times, then converting them back to analog equivalents at the desired scan format. Precise clocking controls all input/output functions. Incoming sync pulses usually initiate specific clock functions. The following is a simplified description of slow-to-fast-scan digital scan conversion. See Fig. 4.

Incoming SSTV is amplified and limited, then separated according to its video/sync content. The sync pulses are used to initiate various clocking functions. During this same time, video information is converted to digitalized equivalents and moved into a time buffer register. The digitalized video information will wait in the buffer until clocking directs it to the main memory. After the main memory has been loaded, its input is closed, and the data is accelerated approximately 1,000 times. Finally, the memory's output

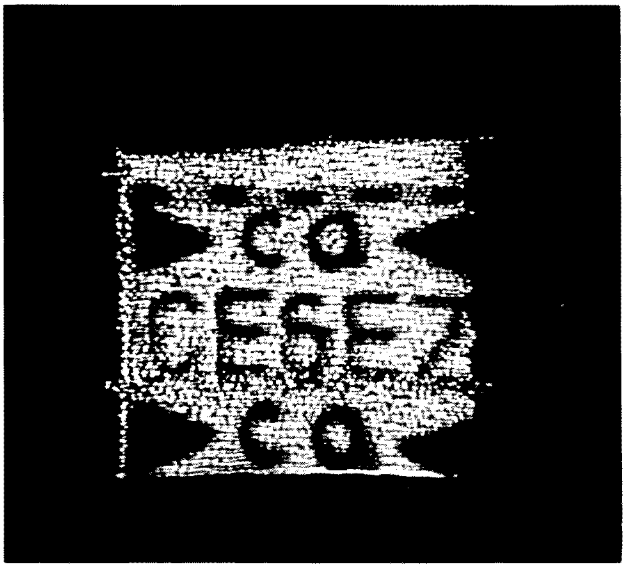

CQ received from CE6EZ in Chile during poor band conditions. This audio fell into the noise level, although his S-3 pictures were still visible.

ID of KH6DEH in Hawaii as received in Alabama. The missed lines near the top of the picture were due to a brief burst of noise.

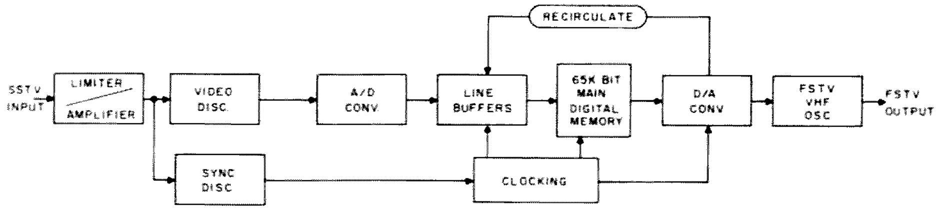

Fig. 4. Functional diagram of digital scan converter.

is opened, and the data is D/A converted. The resultant voltages then modulate a VHF oscillator which connects to the antenna terminals of a regular home TV. Clocking also inserts specific levels at the proper times for generating fast scan sync pulses. Since the information is being read out of the memory much faster than it's being written into the memory, clocking also recirculates the video data as necessary.

This discussion of SSTV gear has become slightly complex, so I would again like to emphasize that you don't need to be an electronic wizard to build or enjoy SSTV gear. The advent of PC boarding allows anyone to construct even the most complex gear and assures its success.

On the Air With SSTV

Once the SSTV gear is working closed-circuit fashion (camera output connected to monitor input), you're ready to connect the HF rig and enjoy video communications. Tune the popular SSTV frequencies, and watch some incoming pictures for a while to get the knack of slow scan. Notice how SSTV expands QSOs rather than merely generating them — how complex pictures require explanation, how they are affected by QRM, etc. Although some slow scanners call CQ exclusively by video, I suggest you use audio and occasionally add a single SSTV picture. This relaxed approach encourages more replies (especially from lightly-equipped SSTVers) while giving your rig a chance to breathe. The duty cycle for SSTV is the same as CW — 100%. Don't make lengthy picture transmissions before learning your rig's capabilities. Your finals will thank you. Usually, the SSTV level is adjusted to equal half of your audio level. If your rig produces 500 Watts output on SSB, for example, set your SSTV level so the rig produces 250 Watts during picture transmissions.

Also, a group of previously recorded pictures will prove indispensable during those awkward first QSO times.

Finally, I suggest you begin your SSTV fun casually. Don't try to set the world on fire overnight. Amateurs who come on strong with new modes tend to burn out quickly, while the smooth pacers last.

Conclusion

The challenging world of SSTV is a constantly changing and progressive field. Recent advancements include motion SSTV, color SSTV, 3-D, computer processed pictures, and much more. If you're the type of person who enjoys staying on top of innovations and being a pacesetter, I'm sure you'll find the world of SSTV a true haven.

SSTV activity can be found daily on 3845, 7170, 14230, 21340, and 28680 kHz, with 14230 and 3845 kHz being the most popular. Consider this a personal invitation to join our gang. We'll look forward to seeing you. ■

Build This Excitingly Simple Receiver

Ray Megirian K4DHC
606 SE 6th Avenue
Deerfield Beach FL 33441

You may or may not be familiar with the various versions of miniaturized communications receivers I've presented over the past 6 years as part of my Minicom series. Although I'm up to an MK VI version at this writing, circumstances have arisen which prompted a decision to revisit the MK III.

The Original MK III

The original MK III Minicom[1] was an electronically tuned 80 meter receiver designed around the Motorola MVAM1 triple varactor. This solid state device took the place of the normal 3-gang variable capacitor used to tune the rf, mixer, and vfo tank circuits. At $13.50 for the MVAM1, I considered the receiver to be more of a novelty than anything else. I included it in my article merely to show existing possibilities to further shrink receiver size, never dreaming of the kind of interest it would arouse.

As has been said about most living things, they start to die the moment they're born. The MK III may not have been a living thing, but it sure died in a hurry. While the article was awaiting publication, Motorola ceased production of the MVAM1. Although the MK III was only one of several ideas covered in the original article, almost everyone who wrote to me was interested solely in duplicating the MK III and nothing else. The question of whether or not they'd have gone ahead after learning what it would cost became academic at that point, and all I could do was pass along the bad news and watch the tears.

New Hope

After the demise of the MVAM1, Motorola introduced the MVAM115 single varactor diode. It, too, was designed for electronic tuning of AM radios and had a high capacitance ratio along with a Q of 150 or better. To make it even more worthwhile, 3 of the new diodes would cost only about a third the price of the old MVAM1. With all this going for it, it was time to bring the MK III back to life. In short order, I obtained some MVAM115s and got to work.

The results were all I could have hoped for during the breadboard experiments, and, as soon as all the variables had been optimized, a PC was laid out and a finished receiver built. Surprisingly, it worked right off, and all I could assume was that Murphy was on vacation or had passed on.

Why Diode Tuning?

Besides a considerable saving in bulk, electronic tuning raises some other interesting possibilities. The tuning pot is connected by wire to the receiver assembly and thus allows remote tuning, if desired. The PC portion of a receiver can be tucked away in a corner of the cabinet, while the tuning pot can be panel mounted without the worry of mechanical linkage to turn the shaft of a variable capacitor. Preset voltages can be switch selected for often used frequencies. A second pot controlling a fraction of a volt can have its output summed with the main tuning voltage to allow bandspreading over very small portions of the dial. In the modern vernacular, this is known as "incremental tuning." Other ideas, such as being able to reverse the voltage so as to reverse the direction of tuning, come to mind when we are faced with this problem in connection with converters. You may think of more as you get involved with this method of tuning.

Circuit Description

Overall, the new MK III seems to work better than the original did. Although no diode selection was made, tracking seems to be as good as that using a conventional 3-gang variable capacitor. Different sets of diodes picked at random were used in the breadboard and the finished PC board with equal results.

A few minor changes were made in the updated version of the receiver. A Motorola MFE521 transistor is used in the rf stage in place of the 40841. A 723 IC regulator is also new, replacing the MFC6030 formerly used. A couple of resistors have also been added to enhance matching to the Murata filters used for i-f selectivity. Everything else is the same as the original.

With the values shown, the

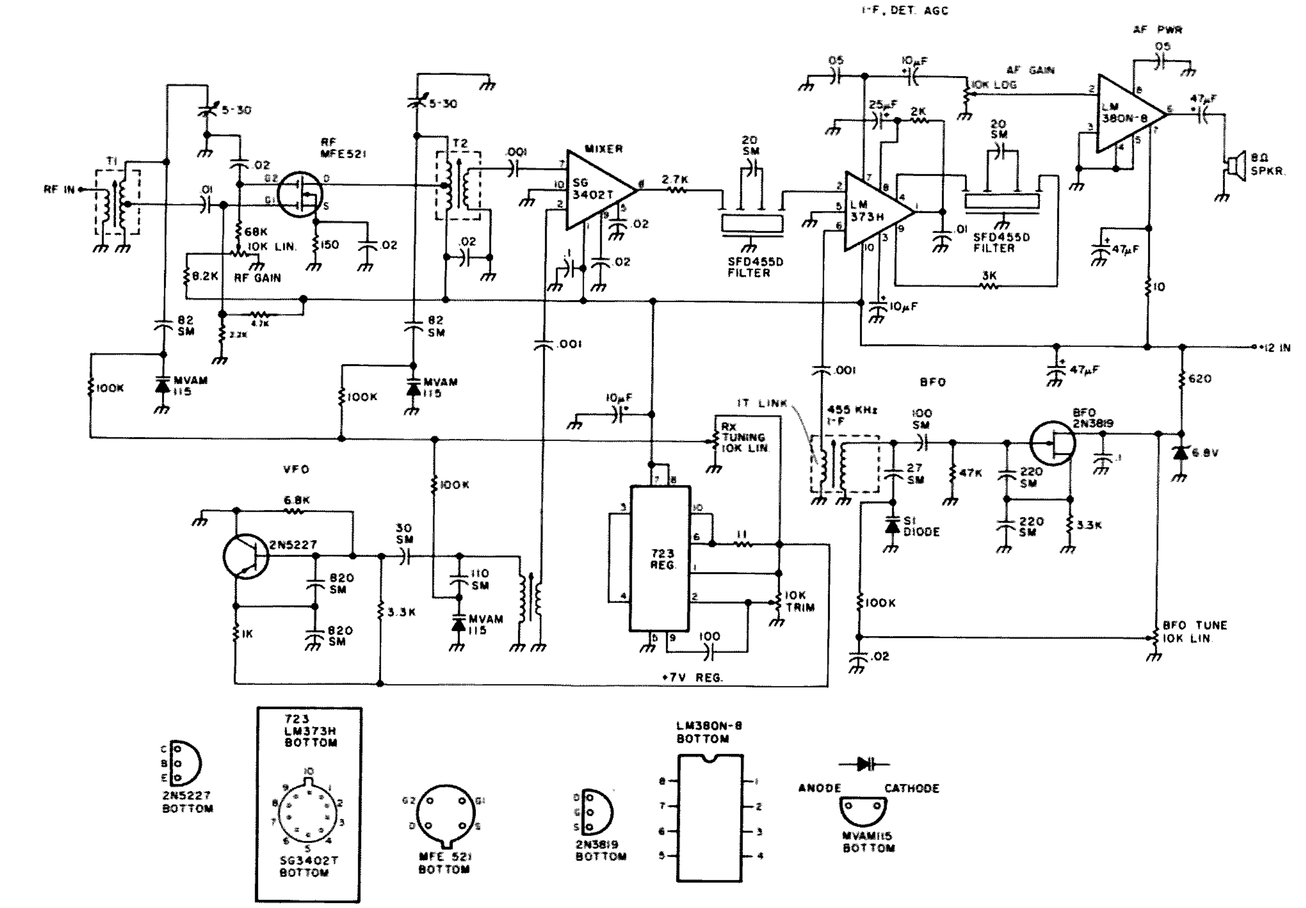

Fig. 1. Complete receiver schematic. All resistors are ¼ Watt, 5%. All polarized capacitors are dipped tantalum. All SM capacitors are silver mica. Remaining capacitors are low-voltage discs. Whole numbers are pF unless marked otherwise. Decimal values are in uF.

tuning range of 3.5 to 4.0 MHz is covered in 180 degrees of rotation of the tuning pot shaft. This makes it easy to use conventional dials.

Because the tuning voltage must be very stable, a voltage regulator is used in place of a zener diode. A 3-volt input-to-output differential is required by the regulator, so, with 7 volts out, the input must be kept above 10 volts. With a 723, the minimum output with the configuration shown is about 7 volts, which, fortunately, is adequate for our needs. The regulator also powers the vfo.

Construction

There are 3 coils or transformers to wind and one i-f transformer to be modified before construction begins. If you've read other Minicom articles, you know I use standard 3/8"-square 455 kHz transistor i-f transformers for a lot of my construction work. In this case, T1 and T2 are wound on stripped-down i-f transformers using salvaged wire. Refer to Fig. 3 for winding instructions. The vfo tank coil is pie-wound on a slug-tuned form. The bfo tank consists of a standard transistor i-f transformer whose secondary has been modified to one turn. This can be accomplished by gently breaking the secondary leads right close to the core with tweezers and unsoldering the remaining wire at each pin. Wind a new one-turn link over the existing windings, and solder the ends to the same pins used by the original winding.

Since it was all being redone, I thought I'd make this version smaller by mounting the resistors and diodes hairpin fashion. The resulting layout is 2.1" wide by 3.9" long, almost a half inch narrower than the old receiver.

All resistors are ¼-Watt, 5% units with one lead bent around a full 180 degrees so that they can be mounted vertically in closely spaced holes. Diodes are mounted similarly. All polarized capacitors are dipped tantalum. All other capacitors are low-voltage discs, except where silver micas are indicated.

The two 5-30 pF trimmers are very small 5 mm types. These, as well as some of the other parts, may give you trouble when searching for sources. If you send me an SASE and a list of your needs, I'll let you know what spares I have and what they cost.

After all parts have been mounted, you'll have quite a few empty holes left over. These are meant for connecting leads to external controls and for dc power. The PC layout shows where everything goes. Some holes will not necessarily be used, such as all grounds located around the copper border. These are for convenience and not specifically assigned. You will also find spare pads for +12 volts and +7 volts regulated.

Testing and Operation

With a 12-volt supply, the receiver should draw between 50 and 60 mA with no signal. A meter in series with the power lead or a metered supply can be used for the initial smoke test in order to

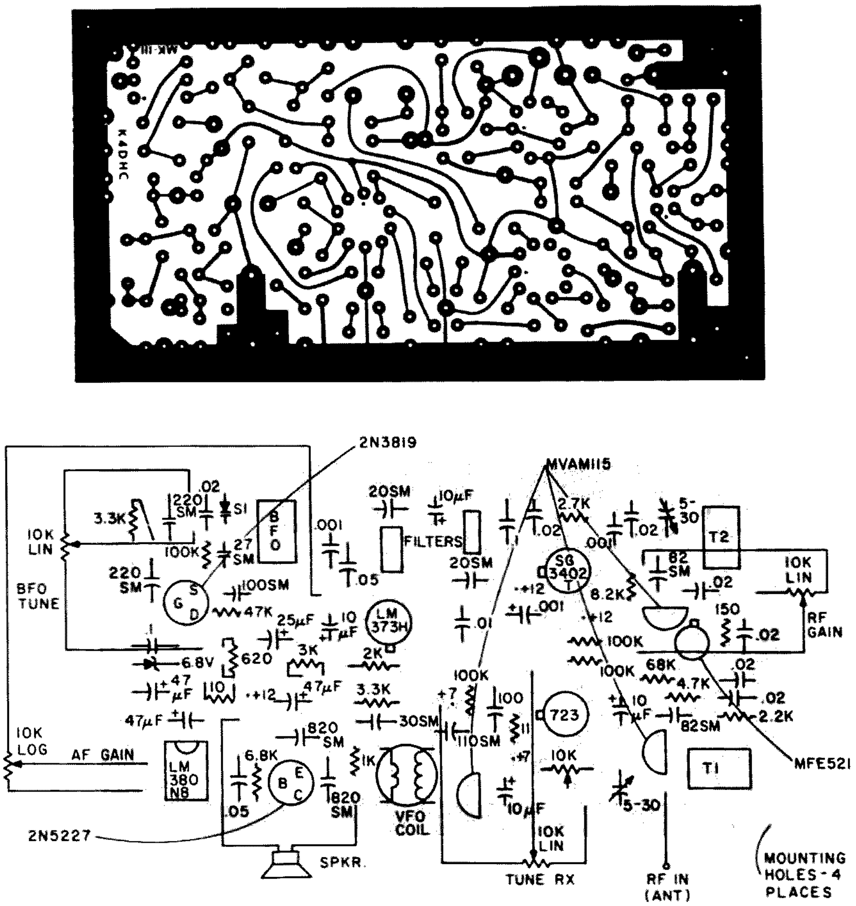

Fig. 2. PC board and component layout. Mount the ceramic filters so the circle on top of the case is towards the 20 pF coupling capacitors.

determine that there are no shorts or faulty parts. If drain is normal, the following procedure should have you receiving signals in 15 minutes or so.

Using a voltmeter, adjust the trimmer resistor for an output of 7 volts from the regulator. Make sure the regulator is working by varying the voltage from the power supply up to 14 volts and down to 9 volts. You should lose regulation at about 10 volts.

Next, turn the rf and af gain controls to maximum and the bfo to mid position. Slowly run the slug in the bfo transformer out towards the top of the can. When you hit 455 kHz, you'll hear a rushing noise with two peaks and a null in between as the core is rotated. Set the slug to the null point which is zero beat. Make sure turning the bfo tuning control varies the frequency on both sides of zero beat.

The remaining alignment steps should be done with the 180-degree operating range of the tuning pot centered so that the excess travel is equally divided at both ends. Some sort of vernier drive is a necessity, and a scale should be mated with the drive so calibration points can be marked off.

Set the tuning pot to the low end starting point and check the vfo frequency. It should be at approximately 3.0 MHz. I use my scope, but a counter can be used. If you have no convenient way of reading this frequency, use brute force. Feed in a hefty signal at 3.5 MHz and rotate the slug in the vfo tank coil until you pick up the signal. The gain controls should still be at maximum and the vfo at zero beat. Adjust the slugs in T1 and T2 for maximum response. At this point, you can turn down the af gain to a comfortable level and reduce the rf signal to prevent overloading of the receiver front end.

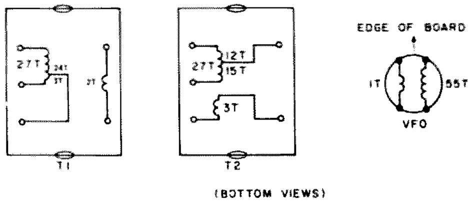

Fig. 3. T1 and T2 are wound on stripped 455 kHz transistor i-f transformers using salvaged wire. The vfo tank coil is pie-wound with 7/44 litz wire on a Gowanda series 7 coil form with carbonyl E core. The 1-turn link is wound over the pie.

Once the low end has been set, run the signal generator up to 4.0 MHz, and rotate the tuning pot up towards the high end until you find the signal. The two ceramic trimmers across T1 and T2 should be peaked with the generator level set at a low level. Repeat these steps several times until good tracking is achieved.

Finally, mark off intermediate frequencies on your dial with whatever spacing you desire.

Conclusion

Using the LM373 in circuits such as this aids in miniaturization, but it leaves one major drawback. The agc system internal to the LM373 is not compatible with the rest of the receiver. I have, on occasion, added supplementary agc circuitry to receivers using the LM373, but, in those cases, space was not a problem. The only alternative is a manual rf gain control, as was used here.

Although the MK III makes a dandy little 80 meter receiver all by itself, it is also an excellent tunable i-f system for a multiband converter. I used the converter (since revised) shown in the MK IV[2] receiver article in conjunction with this tuner and achieved 5-band operation in a very small package.

The diode tuning was also applied to a more elaborate receiver similar to the MK IV and resulted in more features per cubic inch than any Minicom to date. Who knows, perhaps the variable capacitor's days are numbered. ■

References

1. Ray Megirian K4DHC, "Design Ideas For Miniature Communications Receivers," *Ham Radio*, April, 1976.
2. Ray Megirian K4DHC, "The Minicom Receiver," *73*, April, 1977.

John M. Franke WA4WDL
1006 Westmoreland Ave., Apt. 225
Norfolk VA 23508

Can Hams Counter Police Radar?

—*electronic warfare: another step*

There is a growing interest among amateur radio operators in the development of a simple and inexpensive method to jam or otherwise defeat police radar units. This article is written to discuss the various methods I have used and to offer some suggestions for future work.

Electronic warfare is a highly-developed military science, the purpose of which is to render useless the electronic sensor and communications equipment of the enemy. This article will be limited to the narrow realm of CW Doppler radar jamming.

Note: Don't let that complex synthesizer fake you out. All you need is a common audio oscillator, not a laboratory generator like Fig. 2. *73* takes no stand in the developing warfare between police radar and hams interested in countermeasures. The more we read about it, the more convinced we are that police radar should be outlawed as an invasion of person by possibly damaging microwave radiation. — Ed.

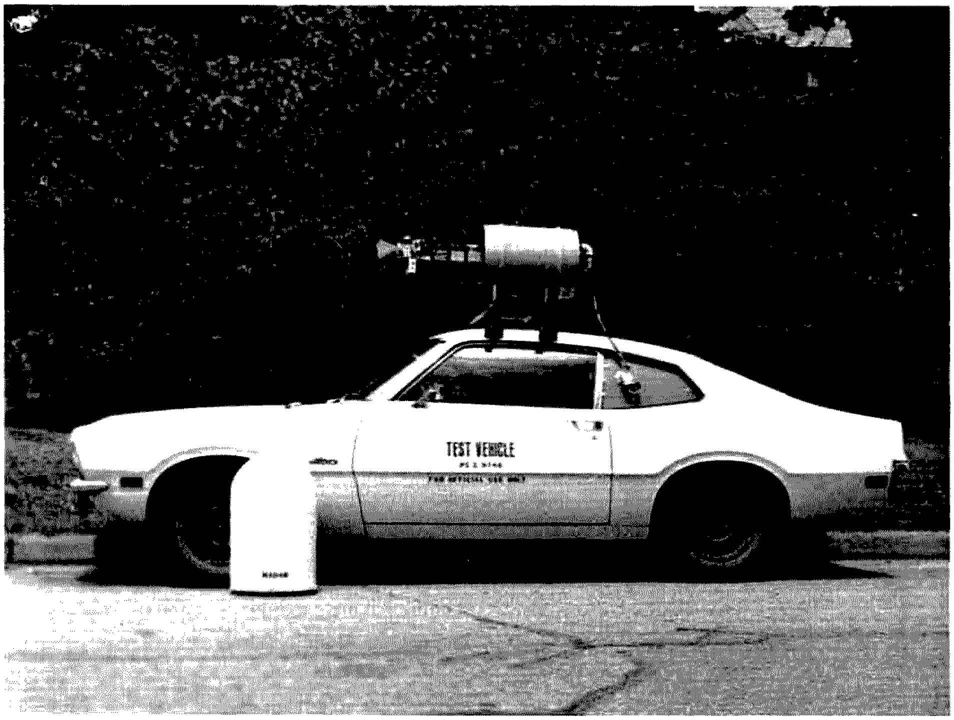

The best place to start is to obtain an accurate description of the hostile unit, the police radar. A block diagram of typical police radar is shown in Fig. 1. The radar consists of an unmodulated CW source, either a klystron or a solid state Gunn or Impatt oscillator, a duplexer to isolate the transmitter and receiver, a common antenna, a detector-mixer, and an audio-frequency meter. Typical transmitter output power is in the neighborhood of 10 to 100 milliwatts. The transmitter frequency is 10,525 MHz, very close to the 10,000 to 10,500 MHz amateur band. Typical antenna gain is between 10 and 20 dB.

In operation, radiation from the oscillator passes through the duplexer to the antenna, where it is radiated in a narrow beam. Energy striking cars is Doppler-shifted by an amount proportionate to the car's velocity. The reflected energy is picked up by the antenna and fed to the detector-mixer. Some of the transmitter output is mixed with the reflected signal. The detector-mixer, usually a simple point-contact diode of the 1N23 series or a hot carrier diode in the newer units, detects the difference frequency, which is measured by the audio-frequency meter and displayed as mph on a meter or LED display.

An audio-frequency meter is used because the Doppler shift is approximately 31.4 Hz per mile per hour velocity, or a speed of 100 mph produces a Doppler shift of 3140 Hz.

Methods of Deception

1. CW Jamming

This is the first method amateurs consider, but it is actually one of the least effective and most expensive. To use this method requires operation outside the amateur band. It also would be necessary to use a scanning

receiver, i.e., a spectrum analyzer, and a voltage-controlled jammer oscillator. The receiver is needed to lock onto the exact radar frequency, because the radar transmitter is not of crystal stability. Then the jammer must be offset from the radar's frequency by an amount equal to the desired false Doppler shift. Again, this method is expensive and requires operation outside the amateur band.

2. Noise Jamming

Noise jamming is a technique pioneered for use against radars in the 1940s and is still effective today, but it's not for amateurs who wish to retain their licenses. Noise jamming consists of modulating a transmitter with broadband noise. The bandwidth of the noise spectrum is made large enough to cover the operating band of the hostile radar. Covering the police radar band would require a noise bandwidth of 10 MHz. The radar's receiver has a bandwidth of only 10 kHz. The result is that, by having to spread the jamming energy over ten megahertz of which only ten kilohertz is effective, only one-thousandth of the jammer power is being used. Also, this method requires operation outside the amateur band.

3. Baseband Jamming

This method is the least expensive and most reliable method that I have tried. The method is simple and does not require operation outside the amateur band. It involves transmitting a tone-modulated carrier within the amateur band. Since police radars have an untuned front end, the detector-mixer will act as a detector for frequencies outside the police radar band. If the jammer transmitter, operating inside the 3 cm amateur band, is amplitude-modulated by, say, 3140 Hz, the detector-mixer will detect the 3140 Hz tone and display a speed of 100 mph. Hence, the radar can be deceived into reading any desired speed by merely modulating an oscillator by a tone corresponding to the equivalent Doppler shift for that speed. I have been able to deceive radar units as far away as one mile using this scheme with a 15-milliwatt Gunn oscillator and a 15 dB gain horn antenna. The schematic of the unit is included in Figs. 2 and 3. Fig. 2 shows the phase locked synthesizer used to generate equivalent speeds of 1 to 99 mph with thumbwheel switches. The design is a hybrid of CMOS and TTL logic because the parts were on hand. The design is not optimum, but it does work. Fig. 3 shows the modulator which switches the Gunn diode oscillator on and off. The photographs show the car used for the tests.

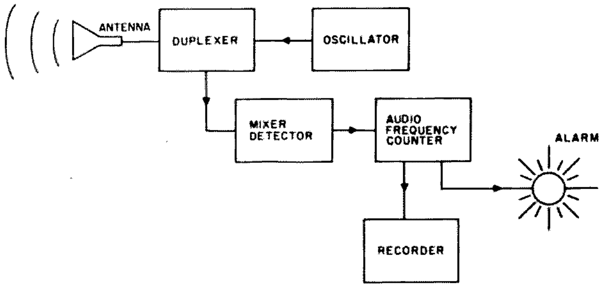

Fig. 1. Simplified block diagram of police radar.

4. Passive Jamming

This area is most interesting in that no transmitter is used. In baseband jamming, the deception is accomplished by transmitting a tone-modulated carrier whose modulation frequency corresponds with the desired Doppler frequency. In passive jamming, it is the reflected radar signal which is modulated to produce the deception. This is accomplished by varying the apparent size or radar cross section of your car. Using an inflatable car and varying the air pressure would work, but a simpler technique is to use an antenna with a varying impedance load. A test unit was constructed with a small horn

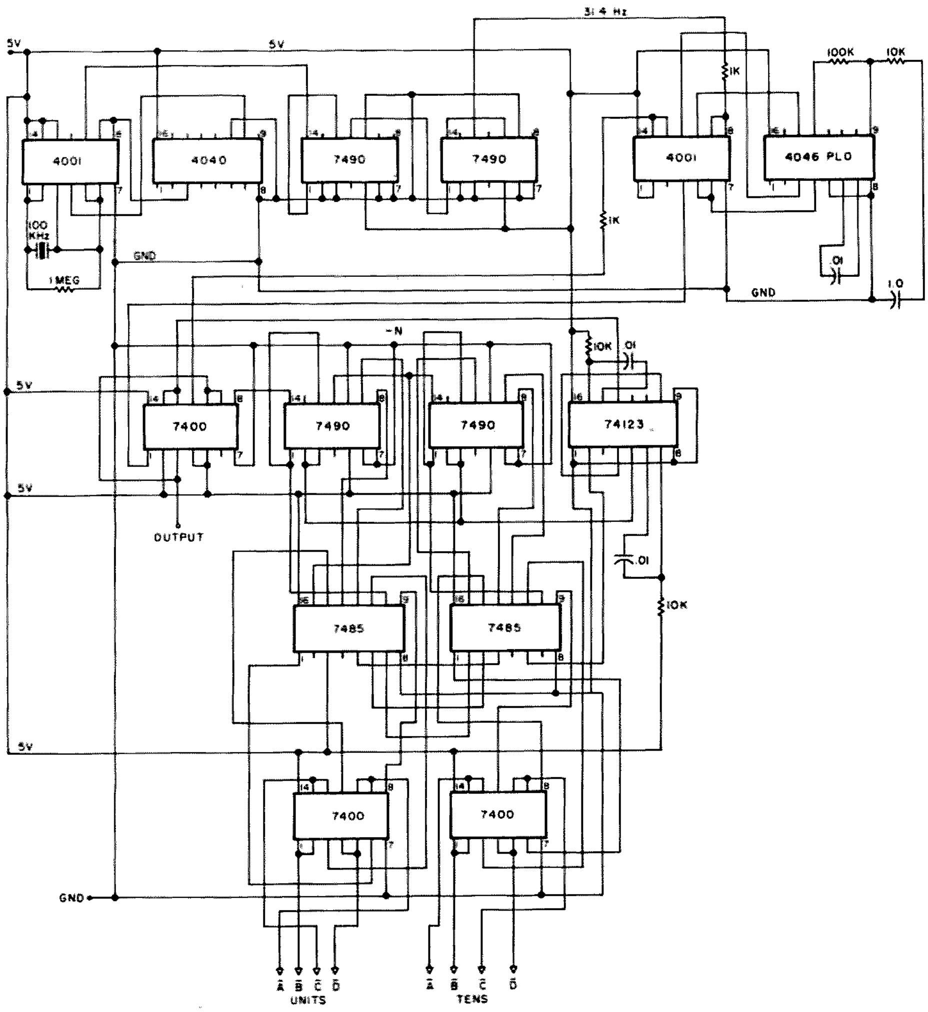

Fig. 2. Phase locked synthesizer.

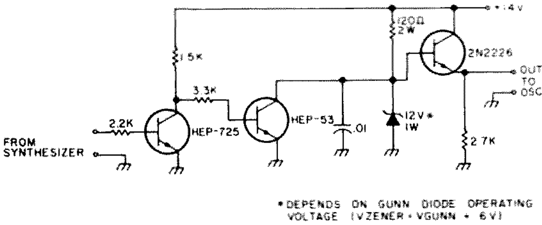

Fig. 3. Gunn diode modulator.

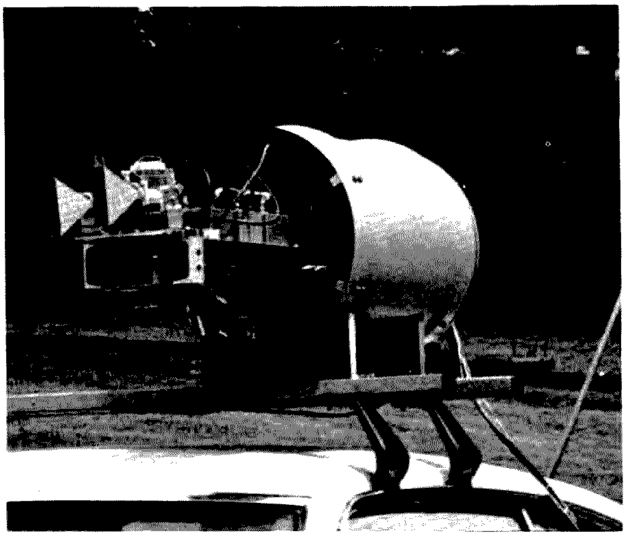

antenna, pin diode switch, and dummy load. The switch is used to alternately terminate the antenna with the matched dummy load or a dead short. The net effect is an amplitude-modulated reflected wave that is capable of deceiving the police radar at ranges of only 20 yards. However, the addition of larger and more advanced antenna designs is expected to increase this range significantly.

Conclusion

Baseband jamming is the most effective and economic method for deceiving police radars. The circuitry is within amateur capabilities. A listing of suggested literature is included and is recommended for potential designers. This article has been limited in scope and theory with the intent that interested amateurs will be able to build workable equipment using these simple guidelines. This article does not cover the full legal problems, and, for that reason, it would be interesting to hear from lawyer amateurs. ■

References

1. *Principles of Electronic Warfare*, Robert J. Schlesinger, Prentice-Hall, Inc., Englewood Cliffs NJ, 1961.
2. *Radar Countermeasures, Radar Technique*, A.N. Volzhin and V. A. Yanovich, (translation of *Anti-Radar*, Military Publishing House of the Ministry of Defense of the U.S.S.R., Moscow, 1960). Available from Clearinghouse for Federal Scientific & Technical Information, Springfield VA 22151, AD682311.
3. "ECM Primer," *MicroWaves*, November, 1969, pp. 44-79.
4. "A Method of Modulation of Standard Radar Target Signals," G. P. Beryulev and V. V. Kostarev, *Radio Engineering and Electronic Physics*, Vol. 18, November, 1973, pp. 1759-1762.
5. "Mobile Smokey Detector," S. M. Olberg W1SNN, *73*, December, 1976, pp. 32-35.
6. "The World of X-Band," Bill Hoisington K1CLL, *73*, March, 1974, pp. 33-44.
7. "Mobile 2.455 KMC Radar Receiver," Paul Barton W6JAT, *73*, March, 1962, pp. 18-20.

Why Not Go First Class?

—FM, RTTY, ID, PL, TT, etc.!

David J. Brown W9CGI
RR5, Box 39
Noblesville IN 46060

If you have ever gotten the daylights knocked out of you, blown up a touch-tone™ pad with the microphone dc on the mike-high line of a Motorola transmitter, been strangled on the 30-odd leads between the FM and your Teletype®, or, like me, all the above – read on. If you would just like to have the ultimate in pleasure in FM (all types) and RTTY operation, this article should appeal to you. It brings together all the audio lines and PTT circuits under one roof (chassis), where it becomes not only a joy to manage and work on, but also, more importantly, a pleasure to operate.

Since the principle RTTY activity hereabouts is on FM at 146.40 MHz, it became a natural to couple all the audio and control circuits of the RTTY and FM into one box and include all the tone control gear I have, to boot. With these ideas in mind, the ESP unit was begun. You'll see why the ESP title really fits if you build one, as you'll begin to think the little box is reading your mind. The unit includes:

1. Audio input controls for:
   a. Hand microphone (local) on FM rack (voice);
   b. Handset (telephone) on console desk (voice);
   c. Auxiliary audio input (repeat or tape) (voice);
   d. Tone control (burst, continuous, dial pulse) (tone);
   e. Touchtone control (TT pads) (tone);
   f. Teletype tones (mark-space-shift ID) (tone);
   g. Automatic IDer for voice or TTY (tone);
   h. CW tone on voice and mark shift on TTY.
2. Keying control automatically tied to modes of 1.
3. Indicators to tell what is or is not happening and enough controls to balance audio levels on all inputs.

The circuit schematic is pretty straightforward in the area of the relay controls and the relays themselves. They merely switch the keying line to ground, with the top set shown, and place audio into a common audio microphone input audio line through the bottom set. It is the control of these relays and the tones, voice, etc., that is the heart of this equipment. I will try to show here what goes on by taking one function or mode at a time, working from the left of Fig. 1, the voice circuits, through the right of Fig. 2, the tone circuits.

Beginning with the left of Fig. 1, I wanted a means of playing back audio tape recordings of earlier events over the FM. Primarily, this happened when I went to a TVT-type RTTY arrangement from my older and noisy Model 19. My only way to store information became audio tape, replacing the old 5-level paper tape. The audio output of tape recorders is about 4 to 8 Ohms, so I included a small 4/8-Ohm winding to 600-Ohm winding audio transformer. This allows any low-impedance output (speaker) to be played into the FM transmitter. This later led to the use of another radio output into the transformer and on into the FM transmitter input (repeater). Since all my Motorola receivers are on the upstairs back-porch and my shack is in the basement, I had long before added COR relays to the 6m, 2m, and ¼m receivers. That way I could detect activity on one band while listening to another band by lighting lights on a 5-button-type office phone I use as a control head.

Pushing one of the push-button lights chooses which transmitter/receiver is in use and has microphone/speaker hooked to it. The red button is used for a transmit button. It was easy to route the COR contacts into this new system as well, and have the facility of an emergency repeater for our storm season around here.

Next is the normal hand-microphone circuit, which is just like control head use except for the pot for level control. If you have a microphone or handset that just makes it for level, set the modulation pot in the transmitter up in the transmitter for proper deviation with the remote (mike location) pot set at 50% to 75%. This will leave you range on all the circuits at the ESP unit. The audio and PTT button are merely routed through the microphone relay to allow other audios into the same line. The PTT button on the microphone now keys the

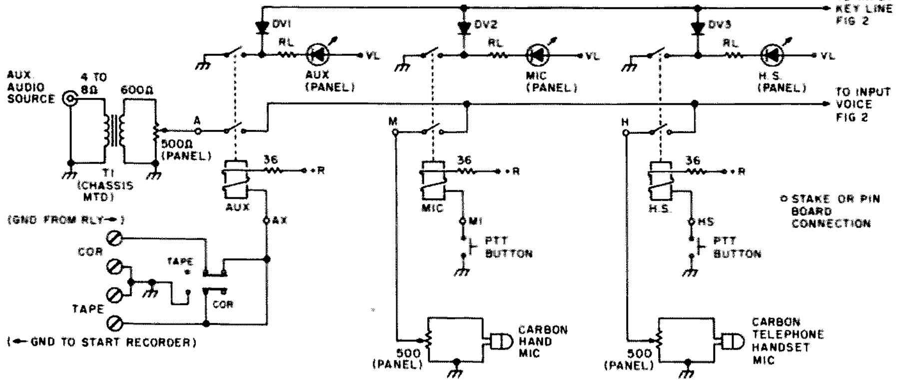

Fig. 1. Voice unit.

relay rather than the transmitter directly.

The handset needs little more explanation than the hand microphone. It is just a second microphone in a telephone style handset and is used at the main radio console/desk.

This completes the voice circuits – very simple – and takes us to Fig. 2 – not so simple. Skip over the circuit marked TEC for a minute, as it has rather broad implications over several of the tone circuits. Follow the key line to the right where diodes D1, D5, and D6 are located. D1 allows any of the voice circuits to close the key line regardless of the tone relays in or out (total voice control), but not the reverse. You can talk over or with any of the tones you care to. D5 keys the tone relay on whenever a voice circuit line closes the key line to ground (i.e., each time the microphone is keyed). D6 feeds the tone function switch, S2, center arm. For a continuous tone always on while the microphone is keyed, the switch is put in C/T for continuous tone (i.e., subaudible tone used on tone access repeaters). For a burst tone (whistle-up repeaters, etc.), S2 is put in B/T for burst tone. I used a tone generator described by WB5BAF, and he states a burst tone of about 0.4 seconds for the values given in the base of the transistor (10k, 35 uF). Set the 10k pots for the frequencies F1 to F5 desired. A total resistance in the range and one frequency pot for 1800 Hz is 28k Ohms, or 20k Ohms for 2400 Hz. That will get you started. The tone oscillator is used for all the single-tone functions. The dial (telephone type) keys this oscillator on via D7 for the relay and D8 for the oscillator. Use the close-and-hold set of contacts when the dial is rotated to stop. The pulse set of contacts shorts to ground the audio output from the oscillator, except when x number of pulses (chosen by the number you dial) allows the oscillator output through by opening x times. That takes care of three of the single-tone functions.

The fourth single-tone function is a bit more complex in routing, but not in use. Have you ever gone too many minutes between IDs during a particularly interesting conversation? It is easy to do and could get hard to explain to the FCC. Why chance it? With S2 in the ID position, every time the voice circuits are keyed, a ground is placed on the center wiper arm of S2, as explained above, via D6. Continue on through D11 to the start input of the ID block. Before you go to Fig. 3 and the ID unit, note D12 on this same start line. For future reference, it performs D11's function when a ground is applied from the RTTY console.

Going now to Fig. 3, the right-hand block is an unmodified TTL K2OAW repeater ID board from *73 Magazine*, February, 1973. This IDer has worked so well for me in other applications that I used it here. It requires a positive pulse to start it and gives out a high-to-low TTL keying pulse train ($\overline{K}$) and a low-to-high TTL hold command to keep the transmitter on for the full call even if you let up on the mike button. This combination of controlling signals is not quite enough to run the ESP unit, thus the W9CGI control unit on the left and center of Fig. 3.

Entering the left side of the control board at the "start" pin, we'll do the easy command first. The pushbutton allows testing the call loaded in the ID board and the code speed over the audio monitor, without keying up

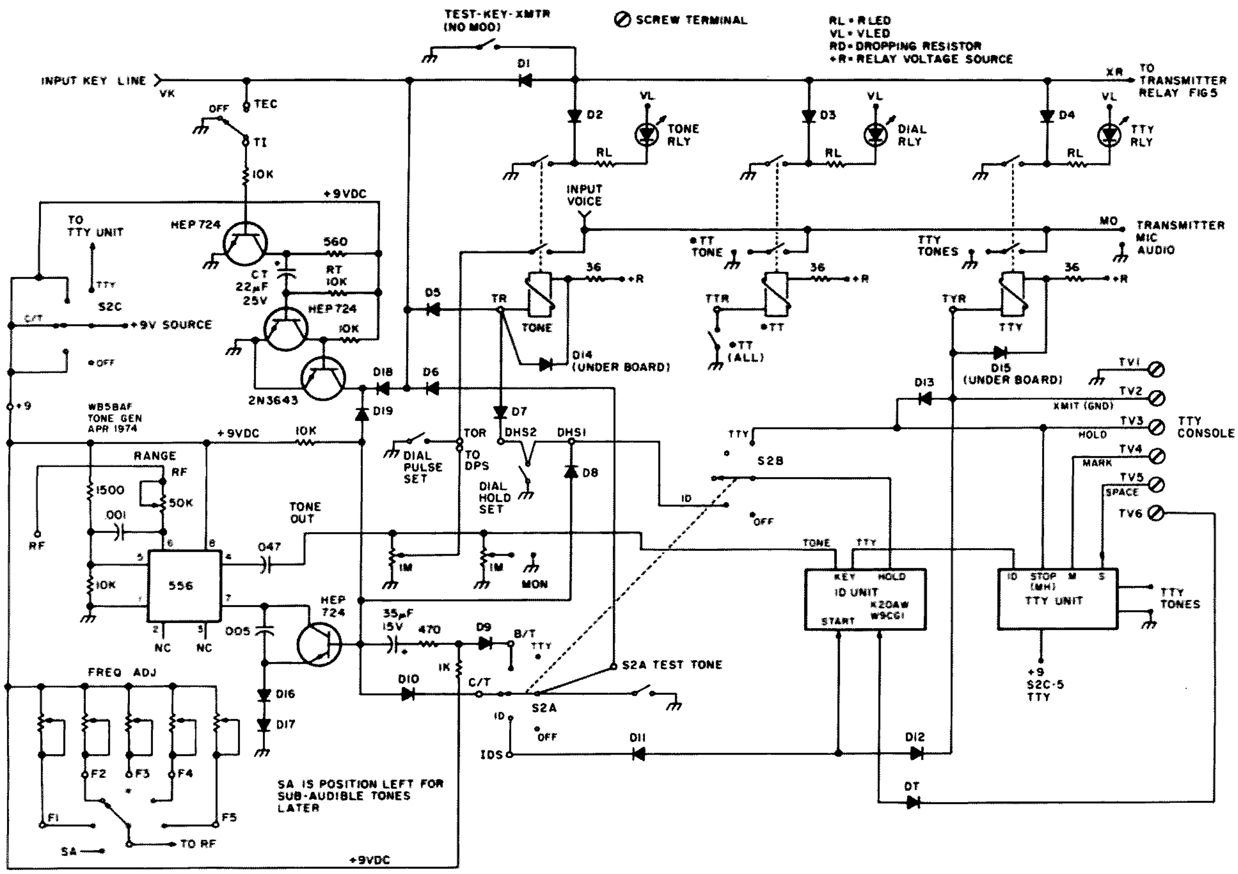

Fig. 2. Tone unit.

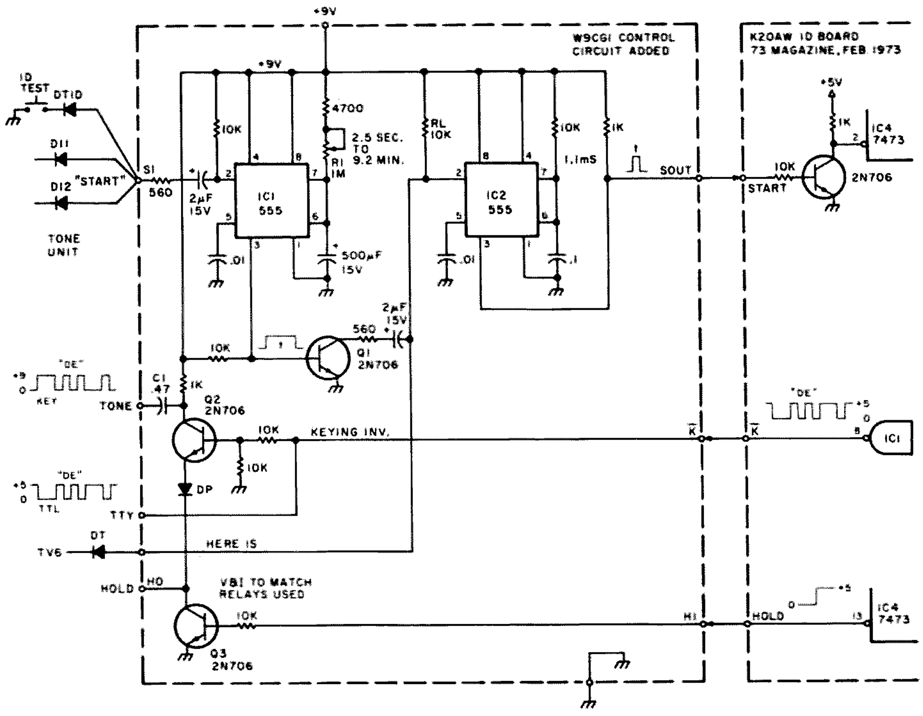

Fig. 3. ID unit.

the transmitter (D11 and D12 prevent key-up). The other two inputs are D11 and D12 mentioned earlier. The ground command causes a negative pulse at IC1, pin 2 (555 timer) and triggers its output pin 3 high. This high is present for 2.5 seconds to 9.2 minutes, depending on where you set R1 (short time to check operation and up to 9.2 minutes for your every-10-minute ID). The high keys on Q1 cause a negative pulse at pin 2 of IC2. There is then a positive-going pulse at pin 3 of IC2 to send to the start input of the K2OAW ID board. If the microphone is released during this period set by R1 and pressed again in that period, IC1 stays triggered and does not retrigger IC2. Thus, you only ID at the beginning of the first transmission and not every time you key during the R1 chosen period. The next time you key after the timer IC1 has reset will ID you again, and all is well. A fact to mention here is that only your station is IDed, and that is all the law requires – double IDs are unnecessary and a time waste (especially on repeaters). Let the other guy ID himself as required – your IDer will remind him. Bear in mind, I am not for regulation requiring auto ID in the ham bands – we police ourselves rather well. This is just a handy device to keep you legal and ease your operating, especially on RTTY.

Once the ID has been triggered into operation by IC2 (also a 555 timer), it takes over control as follows. IC4 of the ID board places a TTL high hold output command on the hold input of the control board (HI). This is fed to Q3 of the control board, where it is inverted into a ground command. It then goes back to the main ESP unit, Fig. 2, via the HO pin to the center arm of S2b. In the ID mode, it is used to hold in the tone relay via D7 and the tone oscillator via D8. In the TTY mode, it goes to the TTY control board, which will be discussed under RTTY.

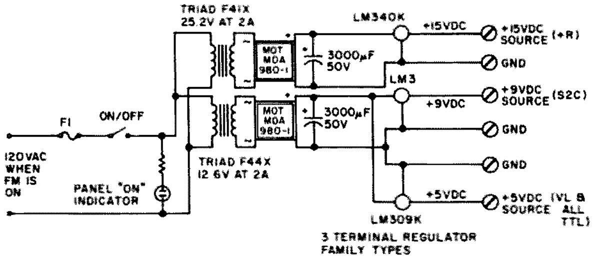

Fig. 4. Power supply.

Keying of the tone on ID function is accomplished by using the low-going pulses from IC1, pin 8 of the ID board to turn off Q2. When on, Q2 shorts out the tone output via C1. C1 line (tone) is connected in Fig. 2 as the key-tone line out of the ID unit block. Q2 has its emitter returned to the Q3 collector rather than ground, to avoid the audio line being shorted out in other functions than ID. It goes through Dp to protect the base-emitter junction whenever the collector of Q3 (hold line) goes back up to relay voltage (+R). The direct TTL output, low-going, marked TTY, will be covered later.

That covers all but the off position and TTY position of S2. Off is obvious – no single-tone gear is running. The TTY position is merely a way to allow a separate use of the ID unit hold and keying lines when in TTY operation. You do not want a pure CW ID or the tone relay energized in the TTY mode. I'll say more on that when I cover the TTY.

The next mode possible is the ever-faithful touch-tone used by so many control functions these days. Of course, I included it for some of the EME control, but one of our local machines in Indianapolis (16/76) has a very useful tape function that is controlled by an incoming TT 70 series number (except 77). It explains the repeater and its use, mentions other area repeaters, and gives road info, weather info, etc., depending on the 7x you punch. It's very nice and very handy, and, if the out-of-town mobile does not have touchtone in the car, I can key it up for him. For those of you passing our way, please note audio (voice) must immediately precede the 7x touchtones, and there is a 45-50 second pause between requests while the 8-track tape rewinds.

My pad is wired up as described in one of the many articles now out, so I did not include that here. The tones from it couple into the ESP unit at the pins marked TT tones on Fig. 2. The ground on any key pushed goes to the TT all on Fig. 2. Be sure to use one that has a level control and is ac coupled out to the outside world. The pad runs nicely off the +9 V dc regulated from the supply (see Fig. 4).

Now we come to the part that started the whole project. If you have ever run RTTY, you can understand why. At the right of Fig. 2 are 6 terminals on the back of the ESP unit. My tone unit is

included in this ESP unit and only requires control signals from the TVT to run it. Terminals 4 and 5 perform this mark-space control from the TVT. Line 2 is the ground from the TVT to control the transmitter. Pin 1, of course, gives the two locations a common ground reference.

I'll first discuss the TTY unit's tie-in and the reason for its inclusion in the ESP unit. The input marked ID on the TTY unit block is the hold-ground from the ID unit via S2b when in TTY mode. In this mode, it forces the machine into a mark-hold tone output. It does not defeat the keyboard of the Teletype in my case. My reason for this is that I am using a TVT and a keyboard unit with 64 characters of FIFO buffer memory which will store up to that many characters and hold them as long as the FIFO output clock is disabled. This disable line is the same line as line 3 of the 6 terminals to the TVT. It holds the FIFO output clock off, thus stopping the output of mark-space commands, but still storing the information in the memory. The instant the hold line goes high again (end of ID), the FIFO unloads and transmits at full machine speed until it catches up with your typing again. Diode Dt is used to get the "Here-is" key of the keyboard over to the tone and ID units of the ESP unit. It keys the ID unit just as the control unit of the ID block, but it bypasses the low minute timer for a "Here-is" ID whenever you punch the "Here-is" key.

The key line from the control to the TTY unit in the TTY mode, as stated earlier, is a low-going TTL pulse train and is used in the TTY unit to do a small mark-shift for ID. This is common practice, but it is usually done with a hand key. It keeps the other guy's machine from running "open" and chattering away or printing garbage as does the usual CW-A1, CW-A2, or voice ID.

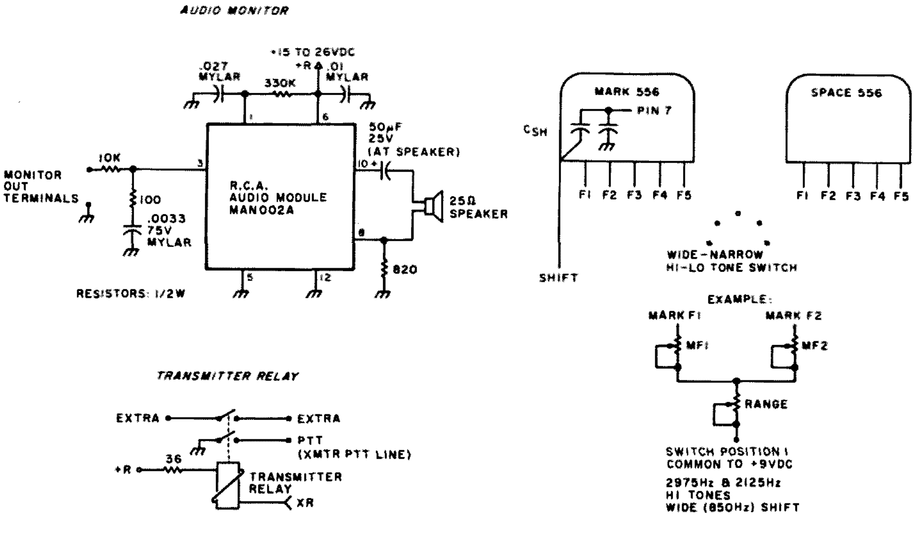

Fig. 5. Miscellaneous parts.

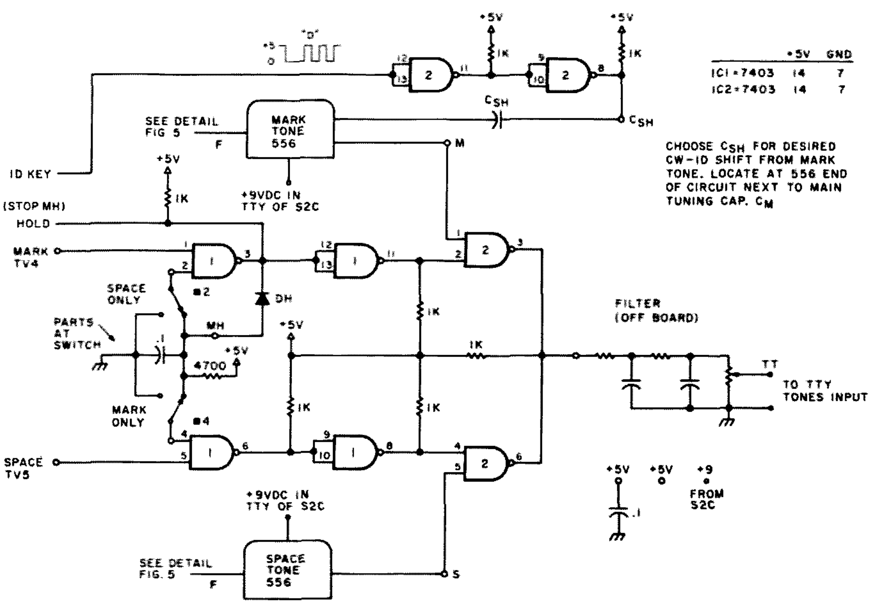

Fig. 6. TTY control unit.

This way, his machine still sees a mark-hold (or almost mark-hold when ID shifting).

Here's a bit more on the TTY console wiring before we cover the TTY unit itself (Fig. 6). Line 2 is a hard ground from a transmit switch in the RTTY console (across lines 1 and 2). This switch happens to be paralleled by a set of relay contacts in my RTTY console, controlled by the keyboard via a 7400 R/S flip-flop. I have two of the unused ASCII keys marked XMIT and RCV that flip or flop this R/S for very neat control, but that is of no consequence to this article. The ground enters the ESP unit on line 2 of the 6 terminals. It starts the ID unit via D12, immediately forcing an ID buffer FIFO hold condition. I can go right ahead and type the beginning of the message, as explained. Line 2 turns on the TTY relay directly. Diode D13 is used as the TTY ID hold-in for the TTY relay. This allows for the fact that you might go to transmit at the TTY console and right back to receive (pretty quickly in my R/S type) in the middle of the ID unit trying to ID. The hold-ground via D13 prevents partial IDs from occurring. Diodes D14 and D15 in Fig. 2 are field collapse diodes across relays to protect transistor keying devices (transistors) from being reverse pulsed. They have nothing to do with any of the diode steering and control diodes.

Now on to the TTY unit in Fig. 6. This is the control and tone-generating unit for TTY operation. The actual tone generators are not shown, but they are 556 oscillators just like the

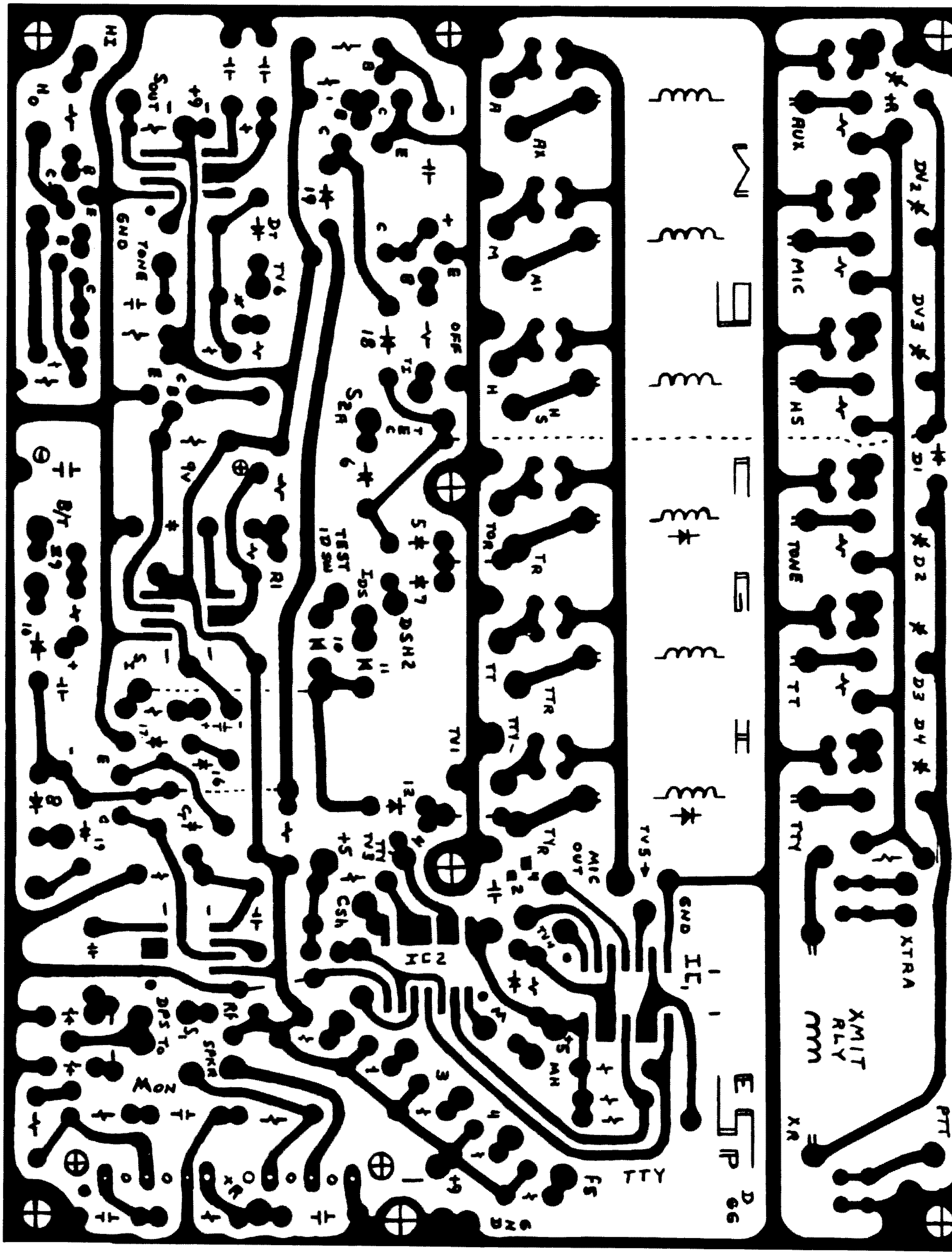

Fig. 7. PC board.

WB5BAF unit for single tone. The F1 to F5 pots are used to set up various tones used for wide or narrow shift and high or low tone groups via a switch. The square wave output from the 556s is used instead of the triangle wave of the single-tone unit. This is because further TTL level processing is going to be done on the waveform before it is allowed to go out over the air.

The mark and space tones run all the time to avoid a

run-up error in frequencies when S2 is in the TTY position. The +5 V dc can be switched around with a fourth section of S2, if desired, as it is only needed in the ID and TTY modes. I run the ID all the time whenever not in a tone mode, and mine comes on with the ESP unit on/off switch. The first half of the IC1, a 7403 quad 2-input NAND gate with open collector outputs, is used to allow for mark-only or space-only sending, should you desire. By shutting off the mark or space side enabling circuitry, you allow only one tone out. A high on the space input line (line 5 from the TVT) is TTL high for a space tone output. For the CW ID, a ground from the ID control unit hold line makes IC1, pins 9 and 10 low, IC1, pin 8 high, IC2, pin 2 high, and the mark tone is held on for the duration of the identification cycle. Dh disables the first half of IC1 mark-space inputs by making one input of each low. Thus the output tries to go and stay high and ignores the other input of each gate. This effectively disables the TVT inputs even if the FIFO sneaks one or two through (depends on your KB/TVT).

Mark and space normal TTY tones are produced just as the hold tone is generated. Whenever pin 3 of IC1 for mark or pin 6 of IC1 for space is driven low by the TVT inputs going high, the proper tone is allowed through the output pins 3 and 6 of IC2 and is sent to the filter. This filter is just like the one used by K2OAW in his IDer article. The filter output feeds the TTY tone terminals of Fig. 2.

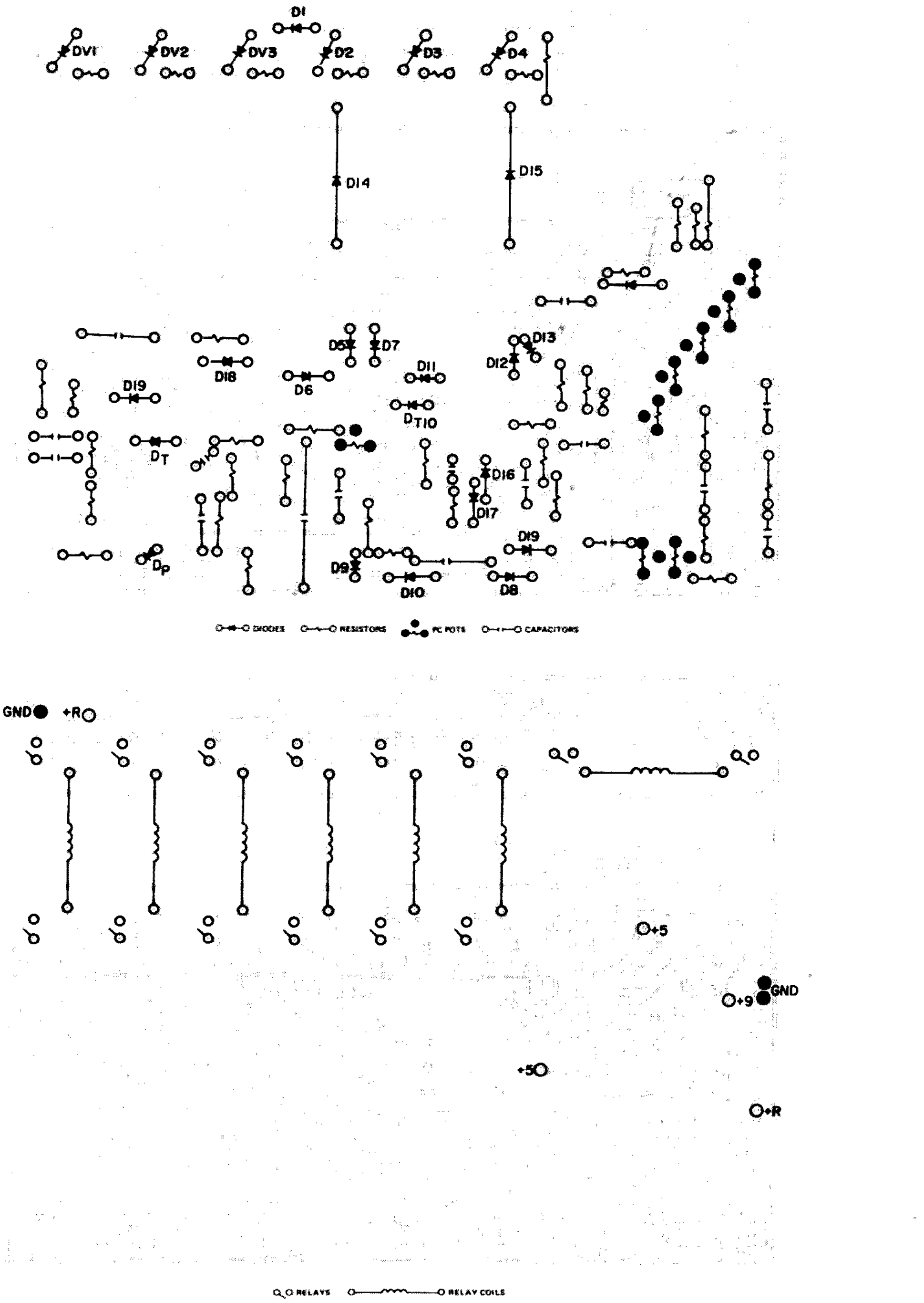

Fig. 8. Component layouts.

The CW ID (TTY) from the ID unit is a low-going TTL and drives ¼ of IC2 as an inverter. This is fed to another ¼ of IC2 to give an open collector for keying a capacitor (Csh) in parallel with the .005 uF tuning capacitor on pin 7 of the mark generator. This Csh, when chosen properly, gives a small shift downward in frequency from the mark tone. The shift is not enough to trigger the space decoding network at the receiving end. It is usually chosen for about 20% of the difference in the shift used, i.e:, 34 to 40 Hz down from mark on 170 Hz shift and 150 to 170 Hz down on 850 Hz shift.

That covers all the voice and tone circuits except the one TEC I skipped over earlier. TEC is my little joke for "tail-end Charlie." If you date back to World War II surplus days, this was the tail gunner in a bomber crew and also the nickname of a piece of equipment modified by hams for 450 MHz work back then. It is a "tail end" for the ESP unit as well. Whenever the TEC switch is in TEC position, it detects the keying line going back up to the +R voltage and triggers another pulse circuit whose pulse length is chosen by Rt, Ct for about the same 0.4 seconds as the burst-tone circuit. The tone relay is held in by D18, the transmitter relay is held in by the keying line path through D18 and D1,

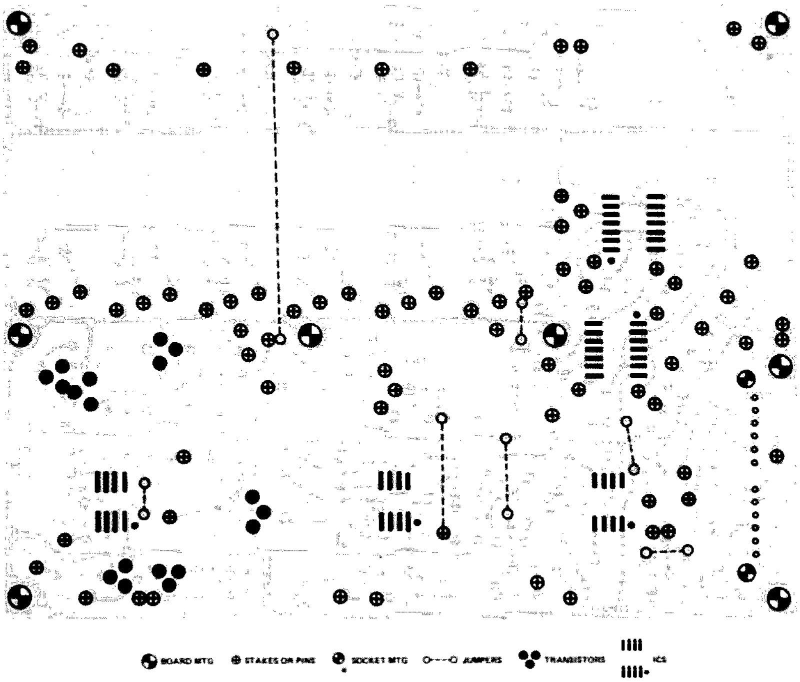

Fig. 8. Component layouts (continued).

and the continuous tone by D19, for a 0.4-second burst tone at the end of a transmission. This is especially useful in rough copy simplex, when it is often hard to understand and know when it is turned back over to you. If you set up the tone for this at about 800 Hz, it really comes through in good fashion, even when conditions are up and down or just plain lousy. There would be a path through D18, D6, and D9 or D10 if the unit were in B/T or C/T tone mode, but this way I can set up for ID front end and B/T rear tone.

Sidelights

Several cute side effects have come out of the use of the ESP unit, not the least of which is the fact that I can now go downstairs, set up a couple of switches, and operate, instead of cable changing and going crazy. Before, to go from voice to TTY to voice meant plugging and unplugging the microphone 4-pin connector, hooking up the key for CW ID, and enough other junk to keep me from running RTTY half the time. I used a large panel on the ESP unit and included 4 meters across the top. I can read from the receiver test octal socket the limiter current (signal strength) and discriminator (deviation). With the help of 3 friends with frequency-synthesis-type transmitters (mean average of 3 for a fairly accurate guess), I calibrated the discriminator meter in kHz deviation and can now help others get transmitters on frequency and deviation set right – or at least closer! A third meter from an older panel (also Motorola) and the same panel's roll clock were also added. The third meter reads the audio in either the common mike-audio high line going to the transmitter or the receiver audio coming down to the shack. The meter is a VU dBm/600-Ohm model. Of course, a commercial-quality mobile speaker was added to the panel.

The fourth meter was an older Simpson that matched the others in style and had a 100 mA full-scale movement. I opened it up (carefully) and added small red lines (press-on) at the 20 and 60 mA marks. I use it to monitor RTTY loop current. I feed the loop from a series-pass supply like so many you have seen. The exception is that I bring out even lower base current circuitry to the panel and a pot, and, by controlling the voltage on the base, I also control the supply output voltage and, therefore, the loop current over a small range. Three older Motorola control heads were gutted for a 4-pin microphone connector on the back apron for each of the voice circuit inputs. The volume and squelch controls were panel mounted also (remember, 3 bands – 3 receivers – 6 controls). Power on/off indication was replaced by a neon on the ESP unit on/off line, so the 3 green lights are used like the phone lights controlled by the COR relays to show band activity. The red lights were used normally to show which transmitter is operating. This is really neat in the COR-repeat mode, as you can tell at a glance the audio from what is going to where! The nice chromed switches are used for several of the functions where possible. Panel space is also needed for the TT unit pad and the rotary phone dial salvaged from an older 300-series phone. One of the control head microphones is used as the local microphone. (Like most of you, I got all the three bands' equipment as mobiles originally.) I built the entire unit into an aluminum chassis (inverted) that is 3" high by 17" wide by 12" deep. (Bud AC418 with BPA1528 cover. This leaves lots of room for the ESP, ID board, RTTY board, power supplies, etc., and a lot of back apron room for all the cable connections to the FM and TVT.) If you rack mount, as I did, consider modifying the rack for drawer slides like you have on your kitchen drawers. They are inexpensive, available at most hardware stores and lumberyards, and plenty heavy-duty for light equipment. It's great when servicing the gear or adding to it. The only special parts are the module used for the audio monitor, which is an RCA sound output module from an XL-100 series chassis, and its companion 12-pin socket. The module is a MAN002A. The board is laid out for relays by ECI Model 401 DPST, 12 V dc, 145-Ohm coil. They are called tiny-T relays, and I run them off the +15 V dc (+R) through 33- or 36-Ohm, ½ W resistors. All the NPN switching transistors can be small signal/switching types in the 100 mA category, like 2N706 or HEP724, except that, for the ones driving relays, you may want something a bit stronger, like a 2N3643. All non-power supply diodes are small switching types of 50 V piv and 100 mA or so. The relays draw around 82 mA, so if you have heavier diodes, use, say, a 500 mA variety.

One small thought: For those who want the subaudible part, too, see the article by WB6GON in the December, 1976, *73 Magazine*. I haven't completed mine yet, or I would have included it, too. Let's see if my ESP can read your mind. ■

Kenneth S. Widelitz WA6PPZ
10960 Wilshire Blvd.
Los Angeles CA 90024

Diary Of A Survivor

—cyberosis victim tells all

I remember the day well — December 17, 1976. It was a Friday evening, and I was settled down in a big comfortable chair in my ham shack. With my feet propped up on the desk, my mind drifted into a favorite daydream — contemplation of the ultimate amateur radio contest station. Visions of a computer-controlled station and logging system danced in my head . . . no more dupe sheets, no more hours of recopying food- and drink-stained scribbled log sheets, no more writer's-cramped hand. The possibilities were endless, but, alas, it was only a daydream.

The next day I was visiting Ham Radio Outlet. My mission was merely to buy a balun. While doing the mandatory browsing, I picked up a copy of the Holiday, 1976, issue of *73 Magazine*. I hadn't read *73* in years. Imagine my surprise, delight, and utter amazement when I saw that it contained an article about a computer-controlled amateur radio station.

Beginner

I virtually inhaled that article and the rest of the I/O section. I needed to know more. I sent off for *73*'s *Hobby Computers Are Here.* I felt like I had been living under a rock for two years. How could this have been going on around me without my knowing?

Feeling guilty about it for the first time, I remembered that I had refused to take a computer class as an undergraduate. Why? Well, I lived in a fraternity on one side of campus, and the computer center was as far as you could go on the other side. School! It hit me — now I'd take that course. The winter catalogue for UCLA Extension had just arrived in the mail. A course was being offered called "Introduction to Business Information Systems." That was close enough! Tuition was steep at $105, plus a $15 lab fee, plus $12 for a parking permit. I ran to the bookstore to get the text — another $18. The text read like, "Everything I Always Wanted to Know About Computers but was Afraid to Ask." I finished it before the class started. Unfortunately, the best thing about the class was the book.

After the third week, I didn't go to class. In fact, I walked out in the middle of the third class after the prof explained binary numbers for the third time. He had insulted my intelligence the week before by showing film strips about computers designed for fourth graders. I had had it with him. Apart from the text, the only other valuable part of the class was the lab, where I learned some BASIC and got a program to run.

Tip number one: Spend your dollars on books and magazines, not classes.

In the interim, *Hobby Computers Are Here* arrived. It's an anthology of articles and editorials from the I/O portion of *73* — great introductory material! I remember it took me a half hour to plow through the workings of a multivibrator flip-flop. But it came.

By then, I had been going great guns for a month, sponging up microcomputer knowledge, reading furiously. Then a curious phenomenon overtook me — the classic middle American overachiever syndrome. Where was I going? What was my goal? When I had gotten into ham radio, the objective was obvious: Get that ticket and get on the air! The license manual was my bible. What I had to learn was clear. Progress was easy to measure (i.e., copying 100 percent at 10 words per minute, etc.). With microcomputers, that wasn't the case. No license was required. I didn't know what I didn't know. Was I frustrated!

I did the only thing I could do — read more. By now, it was magazine time. Fortunately, I had access to the Micropolis Library, which contains almost every issue of almost every hobby magazine. I didn't understand half of what I read at first, but the more I read, the more I increased my knowledge base. By the second or third time I read an article or an advertisement, I started to grasp what was being discussed. It seems funny now, but it took me three weeks to learn what I/O stood for.

After reading magazines for a while, I was ready for Adam Osborne's *Introduction to Microprocessors.* Again, I started out not understanding much of what I read. I did pick up some of the basic concepts, which helped everything fall into place. It was a struggle to read, but very worthwhile.

While in my magazine reading stage, I started visiting computer stores. Being in Los Angeles, I was blessed with a handful within twenty

minutes driving time (everything is a twenty-minute drive in Los Angeles). For the first couple visits, I looked over shoulders. Usually they were the shoulders of a twelve-year-old who knew so much more than I did it was frightening. It took three visits to get over "terminal fright" and actually sit down and try some Star Trek.

I found that most clerks in computer stores can't help but talk over beginners' heads. It's hard not to do. Now, when I show a friend my computer, I use terms that are second nature to me, like I/O, port, address, etc. It's easy to forget how long it took me to understand them.

Tip number two: Find a mentor (or two or three).

A microcomputer mentor is the equivalent of the ham's Elmer. Mentors must be chosen carefully. Your mentor must have the ability to make complicated things simple. He (or she) must have the patience to run over things a third time, when you've forgotten the answer to the question you asked last week and the week before. Your mentor must be able to assure you that you will be able to get up and running, even though that board you built won't work. Most important, your mentor needs to be an accomplished troubleshooter with an adequate test bench. Few people can be all those things. That's why you probably need more than one mentor. Also, few people have the time to do all those things with you. I find I can "time-share" my three main mentors, get all of my questions answered and problems solved, and not alienate any one of them by being a pain in the neck.

I've been very lucky in finding mentors. In fact, I have specialized mentors. Mentor Ken is basically a software man. Mentor Steve is a self-proclaimed I/O expert, and mentor Phil is a hardware man.

Where do you find a mentor? The most obvious place is at computer club meetings. Computer shows are also a good place.

Tip number three: Join a computer club.

Chances are some club member will already have solved the problems you are facing. You will also make new friends and probably gain access to their computers until you get your own. The odds are also that you'll be exposed to a lot of different computers. The hands-on experience can help you when the time comes to choose which microcomputer to buy.

Tip number four: Go to a personal computing show.

Admission is a couple of bucks, and it's worth it just in the literature you can pick up. If you have any questions about a specific piece of equipment, you'll probably find the designer in the manufacturer's booth. There's also a chance that you can win a door prize. The first computer show I went to resulted in my winning an eight-week course in BASIC. If I had paid the $100 they were charging for the course, I would have felt ripped off. For free, it was decent. My

Photos by Stefanie Felix

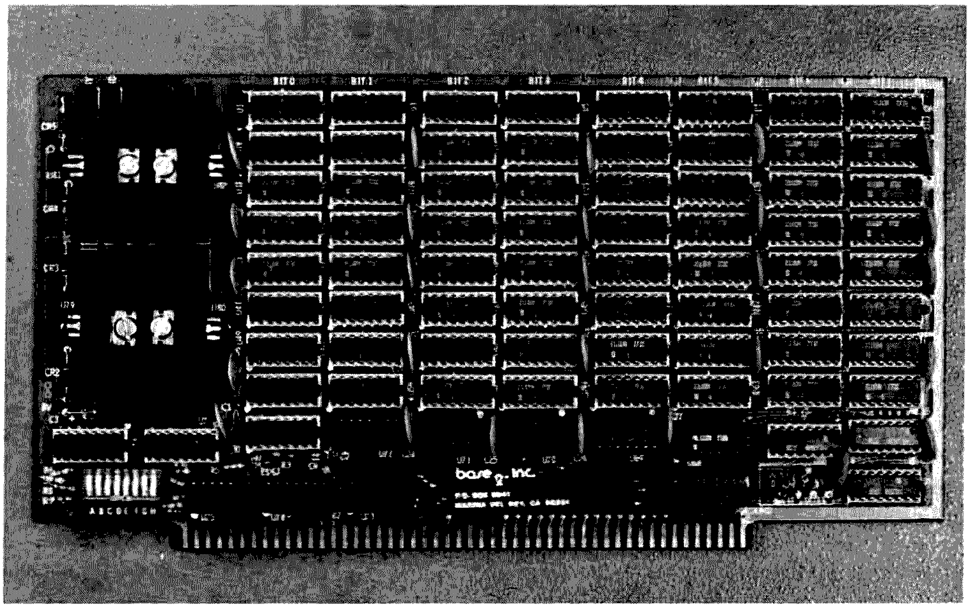

Base 2, Inc., 8K, 450 ns static RAM memory board. At $124, you can have 64K for a kilobuck.

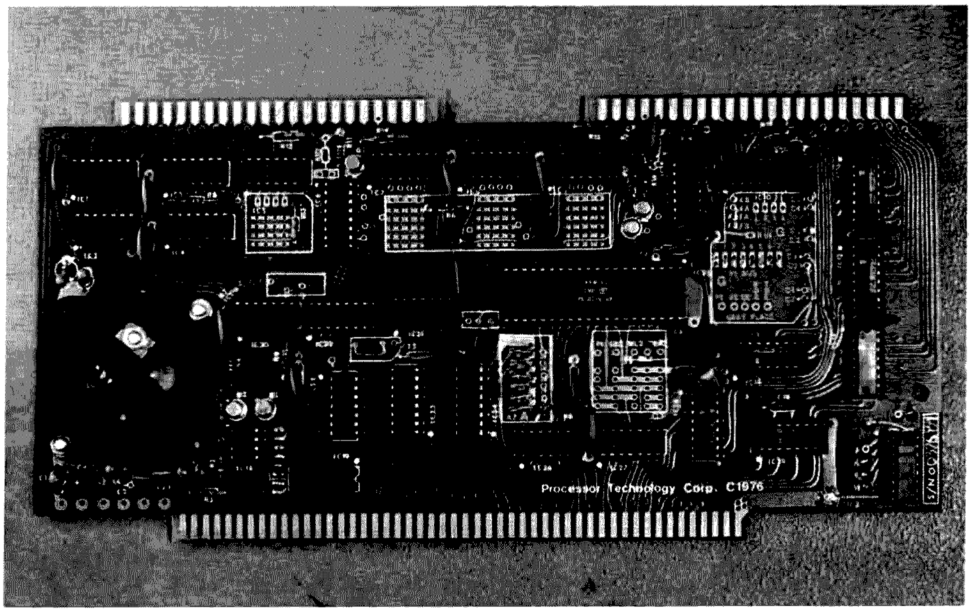

Processor Technology 3P + S I/O board. Note the extra IC in the lower right corner added to buffer the keyboard.

conclusion is that tip one still applies.

Novice

In April, I attended the first West Coast Computer Faire. During dinner at one of the banquets, I mentioned that I had just graduated myself from a beginner to a novice as far as microcomputers were concerned. I was asked the difference. It's easy. A beginner doesn't know what he doesn't know, while a novice knows what he doesn't know.

When you know what you don't know, you know enough to start thinking about buying your own system. I decided I wanted to build mine. I hadn't built anything since I was an amateur radio Novice, and what I had built then often didn't work. That had made me an appliance operator once I'd gotten my General license. I didn't want to be afraid to open up my computer and pull it apart.

To get my feet wet with a printed circuit board project, I bought a twenty-four-hour clock kit. What a shock that turned out to be. I remember using a huge 1,000-Watt soldering gun to build my Novice transmitter (that was a project that worked). Now I had to get a 25-Watt iron. When I bought it, my thought was, "Can this melt solder?" Well, I quickly found that the key to working with a PC board is the proper tools. That clock was a disaster because I didn't have a vise, a very small tip on the soldering iron, or a solder sucker. I was shocked when the clock almost worked. I say almost because one segment of each digit was out. When I got the fixed board back from the supplier, I found that the problem had been that I didn't know I was supposed to clip the component leads close to the board. Since it was a sandwich construction, the long leads had shorted something out. After that experience, I don't know why I decided to go ahead and build my computer.

Tip number five. Get the proper tools.

I'm not going to go into tools in depth. They've been covered in other articles. Two things I found that are mandatory are a PC board holder and a smock. PanaVise makes a beautiful PC board holder. Their whole setup is very expensive (about $45). However, you can use the PC board holder (about $15) squeezed in a cheap vise, and it will do the job. There is nothing more frustrating than chasing a PC board around the workbench when you've got a soldering iron in one hand, solder hanging out of your mouth, and a needlenose pliers in the other hand.

Any smock that covers you down to the knees will do. I learned the hard way after I burned a hole in a nice pair of pants when some solder flicked off the sponge I was cleaning the iron on.

Also, get a very, very small pointed tip for your iron. You can't believe how close some of those pads are on the PC boards.

Tip number six: Know what you are buying.

Now let me tell you some things I learned, much to my dismay, after I bought my Imsai. I bought the Imsai because I wanted something in kit form that had a front panel. Mentor Steve had built both the Imsai and the Altair, and his recommendation of the Imsai was good enough for me.

After making the decision to take the plunge, I phoned half a dozen stores to get the cheapest price. Prices varied from $651 to $751. Some gave lower prices but without the 22-slot mother board. Since then, I've seen them for as little as $599 with the 22-slot mother board. The price is deceiving. You can't do anything with what you get for that price.

You don't get any memory. With the 22-slot mother board, you get only two edge connectors. Surprise – edge connectors list at $7 each. Multiply that times the twenty you need, plus card guides at 25¢ a shot, and you're looking at an additional $150. You don't get a fan (about $20). You don't get IC sockets (about $12 for the CPU and front panel boards).

You have to buy the sockets. If you know about the problem in advance, you can save some money by going mail order. You can wait on the fan. When you do get one, spend the extra money and get a whisper fan. I didn't, and I wish I had. Anyone want a nonwhisper fan, cheap?

Now for the edge connectors. You must get them. If you only get a few, you are going to have to take the whole computer apart sometime in the future when you want to expand (and you will eventually). I wound up buying twenty wire-wrap edge connectors from Jade Company for about $3.10 each. You may wish to spend an extra buck per connector and get solder tail connectors. Putting in wire-wrap connectors is a major chore. It took me literally twelve hours to insert, solder, clip the posts, and check for shorts. It took literally one half hour to get the first connector in the mother board. That's not counting the twenty minutes I spent the first time I tried the first one, before quitting in a screaming fit. By the time I got to the twentieth, I had it down to a two-minute job. The idea is start on one side, place pressure on the top of the edge connector

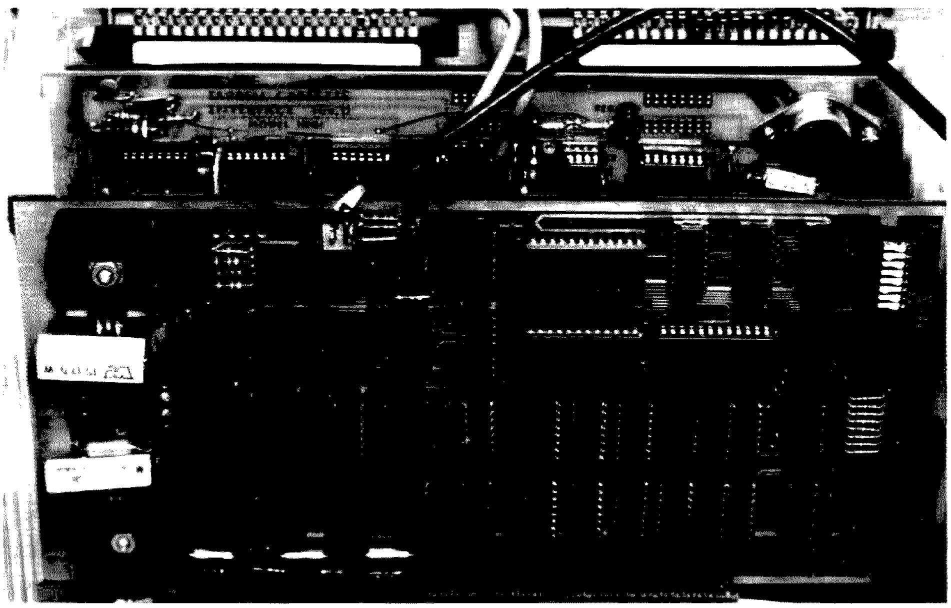

Solid State Music VB1 video board in the mother board with the Tarbell cassette interface and 3P + S edge connectors to the rear.

with one hand, and use the needle-nose to pull the pins into the holes with the other hand. Use a continuity tester after soldering each connector. Check both adjacent and opposite pins. That's 150 checks per connector – very time-consuming, but necessary. If you don't check until the end, and there's a short on the mother board, good luck. You'll need it.

I ought to digress back to the day toward the end of April when I actually took possession of my Imsai. When I got back to the office, I opened the box. That was as far as I got for two days. I carefully extracted the manual first and read it cover to cover.

After reading the manual, I got up enough nerve to dig deeper in the box. Under a large cardboard square were three smaller boxes. The first one I opened was empty! Uh-oh! As it turned out, all the parts were there, the empty box was just filler, as were thousands of those little white plastic wormy-looking things which filled an entire wastepaper basket. For the next two days, I opened up the parts boxes and checked against the parts list, warming up for getting under way. Soon I ran out of excuses. It was time to get down to construction.

My Imsai went together without a hitch (except for the mother board). I found the assembly instructions to be adequate, although sometimes confusing on the first reading. I took my time, and it wound up taking about 50 hours, including mother board. I was flattered when my mentors Steve and Ken complimented me on how good a soldering job I did.

I might add that I built my computer on my office desk. That's probably the only benefit to starting a law practice without an established clientele. I share office space in a suite with my father, and, on the first day that I had tools and parts spread out all over my desk, with a smock over my suit, his comment was, "Ken, this building isn't zoned for manufacturing."

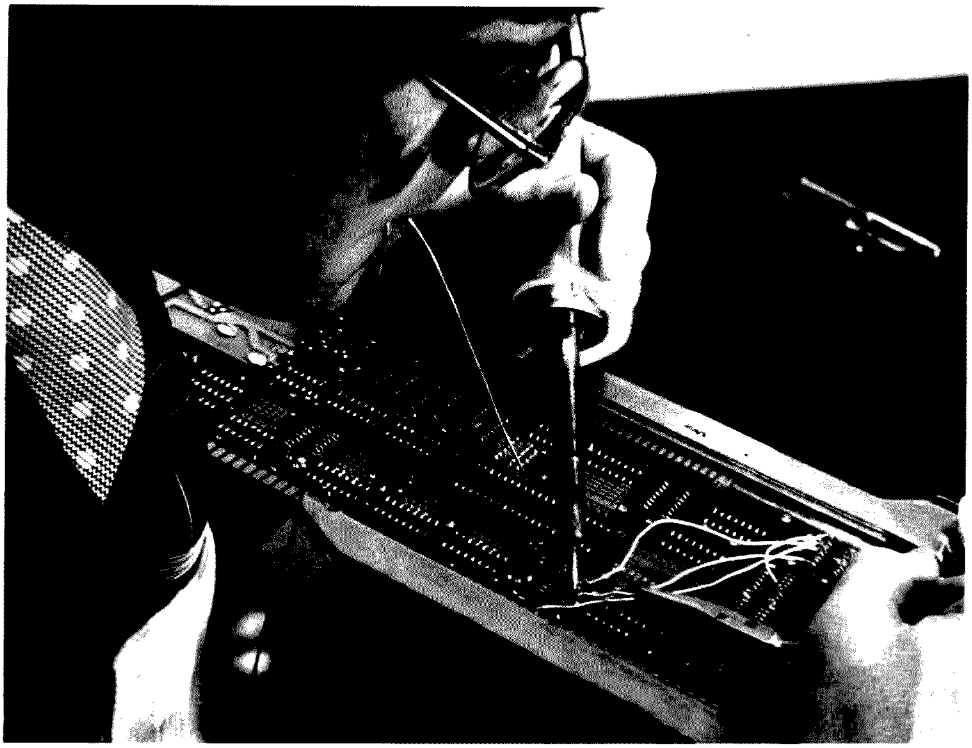

Demonstrating the 4-handed soldering technique.

Tip number seven: IC pins are numbered in a "U".

I only made one error in building the Imsai. That was on the modification which makes sure the board comes up in wait after power-up. It required a few jumpers. No one told me that IC pins are numbered in a "U", which means that, on a sixteen-pin IC, top left is pin 1, bottom left is pin 8, bottom right is pin 9, and top right is pin 16. I had counted from top to bottom and then jumped up to the top again.

My Imsai didn't work, even after correcting my error. Even the mentors couldn't solve the problem, notwithstanding a few midnight troubleshooting sessions.

I knew the problem wasn't in the MPU board because it had worked in Steve's computer, even though it didn't work at first. Steve removed each chip, chip by chip, puckered up and blew hard into each socket, and then replaced the chips. I laughed when he did it, but, believe it or not, the darn thing worked in his computer then. Talk about being finicky.

The front panel board wouldn't work, though, even after Steve applied his magic lungs. I even substituted every chip from mentor Ken's working Imsai.

Fortunately, I had bought my Imsai from a store with expert technicians, the Byte Shop of Tarzana. They found the problem (traces shorted because of defective etching) and fixed it in two days.

After borrowing a 4K memory board from mentor Phil, I was, in a manner of speaking, up and running. Unfortunately, all I could do was play "chase the bit." That grows old very fast.

Intermediate

Having built a microcomputer, I considered myself no longer a novice. Perhaps it is presumptuous to consider myself an intermediate. I guess it's that overachiever syndrome in me. In any event, once you get the basic computer built, it's time to enter the terminal stage in your hobbyist career.

At first, the attraction of an eighty-character line and twenty-four lines plus the "professional" look led me to believe I wanted something like the ADM-3. The cost wound up leading me to assemble a keyboard, monitor, I/O board, and video board. It was funny how it all came together for me. I spent some time one morning trying to find a black-and-white twelve-inch Hitachi TV because I had seen a good article in *Kilobaud* on converting it to a monitor. Believe it or not, in a city the size of Los Angeles, I couldn't find what I wanted. I was interrupted in the middle of my quest by mentor Steve, who told me to start my clock running, as he had a legal problem. It turns out he also had a nine-inch Sanyo monitor he didn't need.

The same day I heard of a computer store going out of business. I picked up a Southwest Tech keyboard and enclosure for $60. Also the same day, mentor Phil said he

During the building phase. Note that the PanaVise PC board holder is used with a cheap vise as a base. Also note the smock. (Note, too, that the XYL is looking over the author's shoulder, as usual.)

had a video board he couldn't use. Add a Processor Tech 3P + S, and I was in business. I got the 3P + S because that's what my mentors had. Conforming to your mentor's configuration is an important consideration. It makes things much easier.

Putting the 3P + S together was a breeze. Understanding how to use it was something else. There are so many options and ways to configure that board that it can blow your mind. Fortunately, my mentors rose to the task.

To interface the keyboard with the Imsai, I knew I had to use a parallel port on the 3P + S for the seven data bits and the parity bit. The keyboard needed plus five volts and minus twelve volts dc. I also had to hook up something called KP. Plus five volts was easy, as the 3P + S pin connection diagram showed it. Minus twelve volts looked like a problem until mentor Steve folded out the schematic and pointed to minus twelve volts clear as day at pin D of connector J1 (and I have the audacity to call myself an intermediate?).

The KP was something else. I understood it meant key press and that it was there to tell the computer that a key was pressed so it could get the data from the appropriate parallel port. Mentor Steve explained that most BASICs look at port 0, bit 0 for status information and port 1 for data. Like magic, it fell into place. KP to input port 0, bit 0, data to input port 1, bits 0 to 7. The only option I had to worry about was to make sure that 3P + S channel A was port 0 and channel B was port 1, so as to conform to the software.

Then mentor Steve gave me a little routine so that when I pressed a key, the ASCII representation showed up at the Imsai's programmed output port. The routine was only fourteen bytes long. After some soldering on the 3P + S connectors, I toggled the routine in, hit a key, and lit some LEDs. But the wrong ones came on. After a few minutes, I realized that what was happening was that the ASCII representation was inverted. Then I remembered the same thing happened in the system functional test from the Imsai *User's Manual*. The programmed output board requires a complement instruction to correctly represent the data displayed. Imagine my delight to have found a bug in the routine my mentor gave me and then to have corrected it.

I had been given a Solid State Music VB1 video board by mentor Phil. The price couldn't be beaten, but, unfortunately, it caused me many problems. The video board's software had to be patched into BASIC. I knew virtually nothing about assembly language programming, and there was no way I could do the patching.

While waiting to hear from Solid State Music regarding the patches, I loaded the "Teletype® simulator" software which comes with the VB1. I found that, when I hit a character on the keyboard, about 250 of that character appeared on the screen. Mentor Steve to the rescue! He found that an additional IC was required on the 3P + S in order to "condition" the strobe. The keyboard and 3P + S manuals didn't mention this.

I got a two-page letter from Solid State Music outlining the patches to BASIC. That was all Steve needed to get BASIC running with the VB1. My terminal was complete.

Before I got BASIC running, I built a Tarbell cassette board. I planned to use it with my second string stereo cassette deck. With mentor Ken's help, I hooked up the recorder to the cassette interface and started the sync stream. Nothing happened.

Tip number eight: You really do need a cheap cassette recorder.

The problem with the stereo recorder was that it had a 300-Ohm output impedance. The Tarbell board requires 100 Ohms. I traded the stereo recorder to my brother for a portable recorder, and I was in business. Mentor Ken had given me a music program. I toggled in the cassette bootstrap, hit run, and started the cassette. The audio generated from programs sounds terrible! I hit reset, turned on an AM portable radio, put it next to the Imsai, and it emitted nothing but a low-pitched whine. I adjusted the volume and tone control on the recorder and tried it again. This time when I hit run, the familiar notes of "A Bicycle Built for Two" emanated from the radio. My right fist shot in the air as I shouted a triumphant "yes!" The rest of the office poured in. "Listen," I said, "it does something." I even called my wife. When she picked up the phone, the Imsai serenaded her. When the tune finished and I told her what it was, she simply said, "Oh, I thought it was a breather call." Sometimes I get no respect.

It turned out that my brother's recorder didn't record. So I bought a Sears $39.95 recorder on sale for $29.95. It works fine. It doesn't require the mods the J. C. Penney recorder does (see "A Clean Cassette," *Kilobaud*, June, 1977) because it doesn't have a tone control and the built-in mike goes off when a jack is plugged in "aux."

Tip number nine: Memory.

I should mention that I bought an 8K static RAM board from Base 2, Inc., in Marina Del Rey, California. They sell a 450-nanosecond kit version fully socketed for $124. Because they were a new company, I only bought one board at first. It works fine, and you can't beat the

price. I now have three of their boards. They run a little warm, but, at that price, you can buy 64K for a kilobuck. Now do you see why you want those edge connectors?

That's where I am today. Now I am dangerous. I'm in the process of shopping for a hard copy device. I'm also just getting into the software jungle.

It's funny. When I built the bare Imsai, Steve told me the worst was behind me. That was the only time he has been dead wrong since I've known him. To tell you the truth, every step of the way was as much of a challenge as the last. The 3P + S option problem seemed insurmountable. Then it fell into place. Then the problems using my stereo cassette deck arose. Those were mastered. Then there were the VB1/BASIC software problems.

Fun time has arrived!

But I've learned a lot, and now I have a fully functional computer system. I also have an excuse to throw an "up and running" party and show off my computer to my friends. Maybe I'll have a name-the-computer contest.

By the way, by next November, I'll have that ultimate computer-controlled contest station that used to be a daydream. Watch out for me in the CW sweepstakes. ■

R. J. Bosen
Box 93
Magna UT 84044

How Good Is the North Star Disk?

—and why is it getting so popular?

Photos by Guy Malmborg

How would you like to be able to turn your system off at night, come back the next morning, flip 2 or 3 switches, and be running complex BASIC programs in 15 seconds? There are several ways of accomplishing this, ranging from keeping a BASIC interpreter in PROM and files on tape to buying a powerful disk drive and controller.

Commercial computers have used a number of interesting schemes to accomplish an "autoload" – Eniac used a large switch panel organized as memory words. Early Control Data computers used spinning cams to close switches and load data words into memory. Recent modern minicomputers have made good use of direct storage access disk systems to take over the memory system and stuff a bootstrap program from the first sector of a disk to the first few memory locations.

Most of these methods, however, have been too complicated and expensive for home use. But there is at least one happy exception to this trend – the North Star Micro-Disk System. For about $700 (the cost of 3 disk packs on a large mainframe system), you can have the kind of performance described above.

The North Star Micro-Disk System is similar to other floppy disk systems in many respects, but the price was kept at a minimum by eliminating some of the frills without making major sacrifices in performance. Incidentally, some of these frills have also been eliminated by other manufacturers without comparable price reductions.

One of the differences between the North Star system and more conventional floppy systems is the use of a minifloppy drive instead of a full-sized drive. This decreases the total amount of data that can be saved on a disk. The minifloppy drive can store 89.6 kilobytes of information as formatted by the North Star controller. Also, this is not a direct storage access device. It uses a memory-mapped I/O system similar to the kind of input/output commonly used in a 6800 microprocessor system. This is, however, still much faster than most tape systems that could be purchased on a hobbyist's budget. The North Star minifloppy format is somewhat less capable of storing large amounts of data than other minifloppy systems which utilize double or quad density data packing. Still, 89.6 kilobytes leave sufficient room for a great many programs on a single diskette, and swapping diskettes takes just 5 or 10 seconds. Also, lower data density may result in higher data integrity.

There are 4 main components in the North Star disk system: the drive, the controller, the disk operating software, and the BASIC interpreter. Let's examine them one at a time.

The Disk Drive

North Star uses the Shugart SA400 minifloppy diskette storage drive. This is good news for the hobbyist because Shugart is one of the major names in floppy disk technology, and many of the parts (notably the read/write head) have similar or identical counterparts with the very

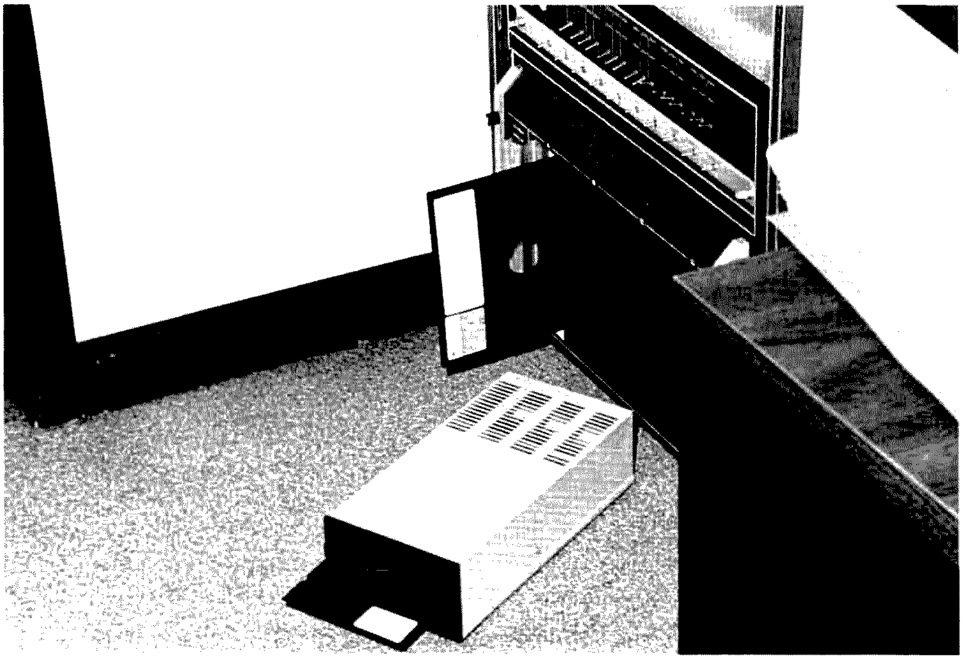

Photo A. If you are familiar with full-sized floppy systems, this photo will give you an idea of the new size of things. Both diskettes have been pulled halfway out of the drives for comparison.

successful SA800 drive. The drive is solidly built and appears very rugged. Most of my disk drive experience has been with huge capacity rigid disks, and I was surprised to notice that there are no provisions for alignment of the minifloppy. I was assured by the technicians at North Star that there have been no problems with diskette interchangeablility since one of the recent modifications to their controller board, but I had a great deal of trouble reading the diskette originally shipped to me (containing the disk operating system and BASIC). I took it to my distributor, and he had similar troubles reading it. Autoloading from it took about 20 minutes because so many repeats were necessary due to errors detected with the cyclic redundancy checking software. As it turned out, I can reliably read the diskettes I write, my distributor can read the diskettes he writes, but we can't read each other's diskettes very well, and neither of us had much luck reading the stuff I got from North Star.

The diskette is hard sectored for 10 sectors per track and 35 tracks per disk, with the first 4 sectors dedicated to the file directory. Two hundred fifty-six bytes of data storage are available on each sector, and a preamble of 16 bytes of zeros and a special sync character precedes the data. The data is followed by one check byte. This format differs somewhat from that used by large-capacity rigid disk drive manufacturers in that it does not allow address verification. This is an interesting area of sacrifice. Many large-disk systems verify the disk address after every seek to make sure the drive has gone to the correct track and sector. Floppy systems do not do this. It has caused no problem in my system and is an example of eliminating the icing while preserving the cake. I think it is worth it for a hobbyist or small business, but, for a big business whose file entries represent thousands or millions of dollars, it may be a serious drawback.

The diskette may be write protected with a piece of masking tape folded over a cutout in the cardboard carrier – very clever. When protected, the drive will not write even if (erroneously) told to do so by the disk controller.

The drive comes without a cabinet, but my distributor didn't charge me for one of the pretty (blue) jobs you see in the photographs. Incidentally, there is room inside that little box for a small power supply, too, and, even though I didn't pay the $40 they wanted for it, they shipped me the PC board and regulators, anyway, so I could tap into the unregulated power from my computer. I was pleasantly surprised at that, but it got me into some trouble later. The +12-volt supply draws a lot of current when the motor starts up, and I had to beef it up before the drive would run reliably.

I was also impressed by the head-seeking mechanism. They have used a stepper motor to spin a disk in small increments. The disk has a spiral groove in it, and what looks like a ball bearing rides this spiral in and out, pushing the head carriage mechanism toward or away from the center of the disk. On long seeks, you can hear the stepper motor make a fluttering sound at each track. Track-to-track access is advertised at 40 milliseconds, which means a 35-track seek will take about 1.4 seconds.

North Star charges about $400 for this disk drive, but, if you order directly from the factory, you can get it for about $355.

The Disk Controller

The disk controller is implemented on a single S-100 compatible PC board which has been silk-screened and solder-masked to increase ease of assembly. Sockets are included for every IC, and, if my experience is typical, it is a good idea. Even though I never had to replace parts, I swapped a lot of them around in order to test them because of timing problems I had.

They used a lot of clever unorthodox hardware tricks on this board. For example, their use of memory-mapped I/O, rather than standard 8080 I/O ports, surprised me. The disk controller looks like a 1K block of variable speed read only memory to the system software, with each disk command decoded not from data sent out from the accumulator, but from the contents of the address bus. Status and disk data are given to the CPU on the memory data in lines as if the data were retrieved from system ROM, and, when data is not available as fast as the CPU wants it, "wait" states are introduced exactly as if the CPU were waiting for slow memory. This scheme does not tie up any of the 256 input or output ports of the 8080, but it does use 1K of address space starting at address E000 in the standard version. North Star may have saved a little money with this method because they don't have to decode the data out lines, but I think there were other reasons for their choice of memory-mapped I/O. It may be possible to use the North Star controller with a

Photo B. It is interesting to compare the minidrive with a giant rigid disk system. This photo illustrates the relative sizes. Ball-park ratios for data capacity are 300 to 1. For price, the ratio is 1 to 18, and the large drive transfers data about 20 times as fast as the mini.

minimum of modifications in a 6800 or similar system because of this choice.

Incidentally, I was able to use the North Star controller concurrently with a Godbout 8K PROM board with both addressed at E000, but with the PROMs of the Godbout board removed from E000 to EFFF. Software package 1 owners, take note.

Note a few other interesting hardware tricks. There are 3 PROMs on the board; two are conventional program storage devices for bootstrap and low-level disk routines, and the third sits on the upper 8 address lines to decode board selection, bootstrap PROM selection, status requests, or the availability of a byte of data to be written on the disk. There is also an on-board clock instead of an attempt to use the 8080 system clock. This may be due to the current trend of using the Z-80 and other microprocessors with different clock speeds. Also, the engineers at North Star have allowed the option of using XRDY instead of PRDY to synchronize CPU speed with memory speed.

The other functions implemented by hardware are: Sync byte detection is directly decoded from the disk and presented as a status flag to the CPU, and a power-on clear eliminates the necessity of resetting the board at turn-on time. (I wish my memory boards had this feature; most of the 15 seconds it takes to autoload are spent unprotecting RAM.)

A function not implemented by hardware is error checking. Most disk systems use hardware to do a cyclic redundancy check or an error correction code. North Star does a CRC in software. Also, address marks are conventionally written on a disk by the controlling hardware and verified at seek time. This is not done in the North Star system, as previously mentioned.

I found a couple of problems with the disk controller. First, current-model PC boards (#MDC A-2) need a modification which requires cutting a run and adding a jumper. This is documented in an errata sheet included with the kit. Unfortunately for me, this didn't solve all my problems. I found my board was sometimes unable to set a flip-flop used to inform the CPU of "write" status, and the software would just hang in a loop waiting for it. I spent many hours with a scope trying to make this problem go away and finally succeeded by making a minor modification to the PC board. I discussed this with North Star and they were very alarmed, claiming that no one else has ever had a similar problem and that I probably have a bad chip.

The Disk Operating System

I think this is one of the real strengths of the North Star system. It provides the ability to load, save, execute, or access files by name or disk location. Names may be up to 8 characters long. Up to 256 different file types may be defined, and 4 are predefined with the system. They are:

Type 0: Default type. All files are type 0 until explicitly changed.
Type 1: Machine language (executable) program.
Type 2: BASIC program. Can be loaded or saved from BASIC.
Type 3: BASIC data file. Can be read or written by BASIC.

Interfacing with system hardware is provided by a good documentation package and memory space for the user to write his or her own I/O and initialization routines. The guidelines provided are thorough, and I have seen the DOS successfully interfaced to a POLY-88, a 3P+S, and a line printer with relative ease.

There are 16 commands available from the CRT. Most of them specify the file name, and some also specify drive number (1 to 3), disk addresses, RAM addresses, and number of sectors to be operated upon. These commands are shown in Table 1.

I am so pleased with the DOS that it is hard to specify a weakness of any kind. But it would be very nice to have the ability to flag and skip over bad tracks on a diskette. I really don't know if this should be called a weakness of the DOS or of the controller hardware, but it would certainly be helpful.

North Star BASIC

I am also quite pleased with North Star's implementation of BASIC. It is much better than the 5K version I had been using, even though it uses 10K of RAM to do it.

I have noticed that it is much slower at number crunching than I had expected, but it calculates 8 significant digits instead of the more common six, and the slower speed is probably a good marketing strategy for North Star, whose second major product is a hardware floating point board designed to speed up number crunching.

As shipped from the factory, North Star BASIC expects to find 16K of RAM starting at address 2000 hex. It does not overwrite the disk operating system, although some commands of the DOS bomb BASIC. (It's a small loss when it only takes 5 seconds to reload.) BASIC uses the upper 4K (approximately) for program storage, and documentation is provided for expanding or moving the program storage space.

Major strengths of the BASIC package are shown in Table 2. Additionally, all of the standard features you'd expect to find in a good

1.	LI	List the disk directory of the optionally specified drive. The following information is returned: file names, lengths, starting addresses, and types.
2.	CR	Create a new file. CRT specifies name, length, and optional starting disk address.
3.	DE	Delete a file.
4.	CO	Compact file space, eliminating blank areas.
5.	TY	Change the type of a file.
6.	GO	Load and execute a type 1 file.
7.	GA	Set the "go address" of a type 1 file.
8.	JP	Jump to the address specified in HEX from the CRT.
9.	LF	Load a file to RAM.
10.	SF	Save a file from RAM.
11.	CF	Copy a file (same or different disk, different names).
12.	CD	Copy an entire diskette (multiple drive systems).
13.	RD	Read a #of blocks from disk to RAM.
14.	WR	Write a #qf blocks from RAM to disk.
15.	IN	Initialize a new diskette.
16.	DT	Drive test: writes a changing pattern all over the diskette, then reads and checks it. This is useful for checking a diskette for bad spots.

Table 1.

1. A line editor which has several commands for copying or changing portions of old lines.
2. Formatted output similar to FORTRAN.
3. Multiple-line user-defined functions.
4. String and substring manipulation.
5. Boolean operators: and, or, not.
6. Memory examine and fill (decimal memory values).
7. 8080 in and out capabilities.
8. Machine language subroutine calling with interface to DE and HL register pairs.
9. #of bytes of program storage remaining can be calculated.
10. Natural logs and antilogs.
11. Random and sequential disk file accessing.
12. Trigonometry (sine and cosine only).
13. Multiple dimensioned arrays.
14. Renumber.

Table 2.

BASIC package are available with North Star BASIC.

As for its weaknesses, once again, it is hard to criticize a software package as sophisticated as this one, especially at this price. Less capable BASIC interpreters have been sold for thousands of dollars with no hardware and very little documentation provided.

For a price which I considered very reasonable, I recently received from the factory a software update on a diskette. This time I was able to read the diskette perfectly. Included are ARCTANGENT and "CHAIN," the latter allowing one BASIC program to call and execute another BASIC program from the disk. I consider this an indication that they intend to give good support to this product.

Conclusions

Overall, I am very pleased with the North Star disk system. I am convinced that, dollar for dollar, it is the best investment to be had in the area of mass storage for computers today. Extra bonuses are the great disk operating system and the good implementation of BASIC.

Nevertheless, it is a big project. I have built each part of my system from the ground up, and this has been, by a big margin, the most difficult of all, including home brewing my own CPU from Altair PC boards and home brew components, cabinet, power supply, back plane, etc.

I recommend to those of you interested in buying this product that, if you don't have a solid background in hardware and access to a good dual-channel oscilloscope, buy it assembled and tested. It may have been just bad luck on my part, but, even though I never had to replace a bad component or redo a connection, it still took me almost 2 weeks to get it running flawlessly. ■

John Rheinstein WA1PTZ
10 Gould Road
Lexington MA 02173

Pseudorandomness Is Just Not Good Enough

—true random happiness with a Z-80

Most versions of BASIC have a built-in function RND(X), which is used to obtain pseudorandom numbers. These numbers are called pseudorandom because a deterministic algorithm is utilized to generate the desired numbers. While not truly a random sequence, the output from a good random number generator is a sequence of numbers which passes various statistical tests for randomness. Unfortunately, not all random number generators' output sequences may reasonably be considered to be random.

The Z-80 has a 7-bit refresh register, the R-register, which may be used to generate truly random numbers. In this article, I shall indicate how I accomplished this on a Digital Group Z-80 system using Maxi-BASIC. Minor variations should allow the technique to be used with other versions of BASIC running on Z-80 microcomputers.

Maxi-BASIC has a built-in function CALL (argument). This function calls a machine language subroutine which starts at the location given by the argument (in decimal). The CALL function returns to the calling program the integer which is in the HL register when the machine language subroutine returns.

The simple program listed below serves the purpose of zeroing the H-register and loading the R-register into the L-register.

```
046  000₈  LD   H,0
355  137₈  LD   A,R
157₈       LD   L,A
311₈       RET
```

This subroutine uses 6 memory locations and may be placed wherever convenient. I use 005 350_8 (1512_{10}) as the starting location. A sample calling sequence in BASIC is given below.

```
10      INPUT X
 .
 .
 .
200     LET Z = CALL(1512)
210     LET Z = Z/128
```

In this calling sequence, statement 200 returns an integer between (and including) 0 and 127. Statement 210 normalizes this to the range 0 to 1. Statement 10 is, perhaps, a surprise. However, if it is not used, then you cannot be assured of obtaining a truly random sequence of numbers. There should be an INPUT statement in the program, whether needed or not, prior to each call for a random number.

The R-register is a counter which is incremented every time an instruction is fetched — several hundred thousand times per second, usually. The current contents of the counter are sampled by the LD A,R instruction. We randomize the intervals at which the R-register is sampled by means of the INPUT statement. This statement requires a response, a keyboard input. It is the random length of time required for this response that is responsible for the truly random sequence of numbers produced. ■

Beethoven Need Not Fear

—*a little night music on the micro*

Mike K. Cook G8HBR
71 Thatch Leach Lane
Whitefield, Manchester
England M2S 6EN

"There it is," I said to my girlfriend, while pointing at a maze of wires, switches and LEDs mounted on a piece of 1'6" x 6" wood. "It's a microprocessor, a computer," I added in an attempt to prevent her face from dropping any more.

"Is that why you couldn't take me out this last fortnight?" She scowled, and I could hear the inevitable question forming, "What does it do?"

"Well . . . er . . . anything and everything — it makes conventional electronics totally obsolete." That seemed to stall her for a second.

"Why isn't it doing anything?"

"Well, that's because I haven't learned to drive it yet. I'll have to find out how to play it."

"Play it?" She sounded more enthusiastic. "Will it play tunes?"

"No, what I meant was . . . but wait a minute, that's not a bad idea. I could, yes, perhaps a loop, raise flag . . . " I muttered to myself in totally technical terminology, leaving her even more bemused.

"So will it?" she interrupted.

"Yes, it'll even compose its own tunes — a little electronic Beethoven." She smiled, and I was more than a little relieved that this forty-legged beast was not going to ruffle the course of true love.

And that's how I started playing tunes on my microprocessor system.

I'll briefly describe the system. Hobby computers are unknown in England. Nothing (at the time of this writing) is available commercially in this country, so, if you want anything, you have to make it yourself. Being a student, I couldn't afford anything fancy. After a brief look around the stockist's, I decided to buy a Signetics 2650 microprocessor. It had a single voltage rail, a single-phase clock (you can stop the clock), separate sense, and flag input/output. The whole unit was TTL compatible, so it required no expensive data bus buffering. The outputs were latched and brought to eight LEDs. I used 256 x 8 bits of memory, and I programmed it by switching the inputs to the RAM, writing up the word on the switches, and pressing a "write in memory" button. When the program is entered, the memory is switched over to the microprocessor, and the program runs. When an input is required, the micro-

processor stops until a "continue" button is pressed, indicating valid data on the input switches. It's not the most sophisticated of setups, but it will do for a start!

So, armed with this system, I set to work. I will not detail the listings of my program here, as 2650 machine code is not everybody's idea of a barrel of laughs. The flow diagrams and description should enable anyone to program the machine, and, if you are running BASIC, they will be very short when compared with the machine language. As I mentioned before, the Signetics 2650 has a flag output, which is a single-bit latched output, and this was used for early experiments, although one of the data bus outputs could do.

The Fundamental Techniques

To produce a single tone, a software delay loop is used. When completed, the flag is raised (a "1" is put on the output), and the delay loop is entered again; when completed, the flag is lowered. The delay is caused by loading a number into a register and de-incrementing the register until it is empty. The length of the delay and, hence, the frequency of the note produced are dependent upon the number loaded and the clock frequency of the microprocessor. The Signetics 2650 is a static device, that is, the clock will work down to dc. This gives great flexibility in producing a variety of outputs. In the delay loop, dummy operations can be placed to take more time, thus making longer delays; in my case, there is a "no operation" instruction which takes up two machine cycles or six clock cycles. With a crystal-controlled clock, the number of clock cycles in the loop can be calculated to give an exact frequency.

Well, a single tone is not going to satisfy anybody for very long. So the next step was to make the number loaded into the delay loop programmable from the input switches. You now have 356 tones to play with. As they are not on any chromatic scale, some of them don't sound all that good. Also, some will be spaced so close together that there will be little audible difference between them. But it's a start, and you can work out what number loaded into the delay will give what note. Once you have a feel for this, you can start working on your first computer tune. The problem is that the number fed into the delay loop must be changed every few seconds. This can be done by using the interrupt. An external oscillator is used to fire the interrupt. When interrupted, the microprocessor will select a number from a preprogrammed "lookup" table and use it to make a tone until it is next interrupted. If the interrupt oscillator is set at about 1 Hz, simple tunes can be produced.

If a long note is needed, the same note is put in the lookup table several times. The way to implement a lookup table will vary depending upon the language you are going to use, but they are all simple and follow the basic form of code-conversion routines used in most systems. A number can be used that is decoded by the program as a blank. When the number is taken out of the lookup store, it is tested, and, if it is the specified one, the

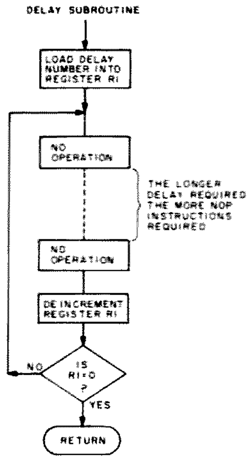

Fig. 1. Delay subroutine.

program will halt or go into a loop with no raising or lowering of the flag. The lookup table can be set to scan once and stop or to scan continuously, thus producing a repetitive tone. I reckon I have the first microprocessor that plays "God Save the Queen." Who will be the first to produce "The Star-Spangled Banner?"

A Different Approach

Having given my girl this toy to play with, I was hard put to get time on my own machine. (Have you ever heard a piano and microprocessor duet?) But, in the times I could get on it, I had another idea: Dispense with the interrupter (for the time being), and get the microprocessor to produce its own tune. I could take the numbers for conversion into tones not from a lookup

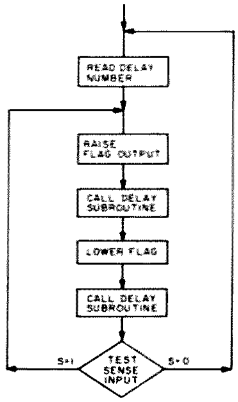

Fig. 2. Simple tone-producing program. The tone produced by any number read in will be continually produced until the sense input is switched to "0". The program will then accept another number. In this way, you can see which numbers produce which notes.

table, but from the program that generates the tones itself. This means that the microprocessor is playing its own instructions — a sort of autobiography! I also said dispense with the interrupt oscillator, so what do you replace it with? If the output is counted and a new number put in the delay loop every 256 cycles, then low notes will appear to last a long time and the high notes for a very short time. The program was worked out and loaded by hand (about forty instructions) and run. The results were rather surprising. It sounded like a computer. The low notes, on for a longer

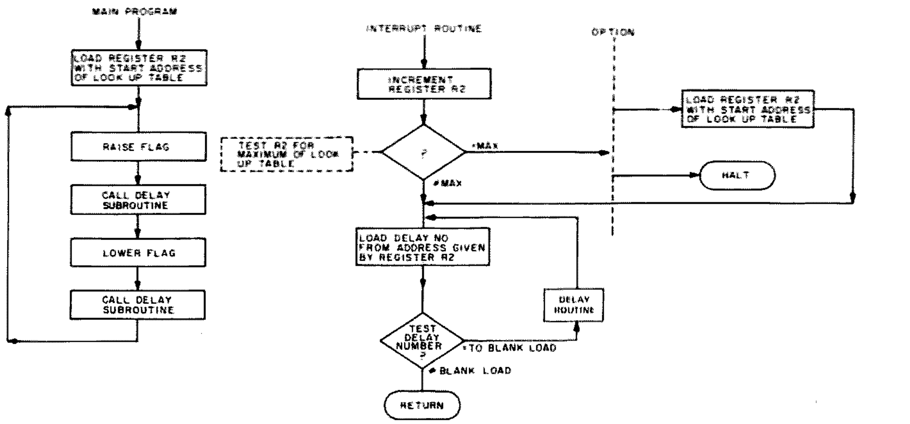

Fig. 3. Program to produce a simple tune. The option in the interrupt routine will produce a single or a repetitive tune.

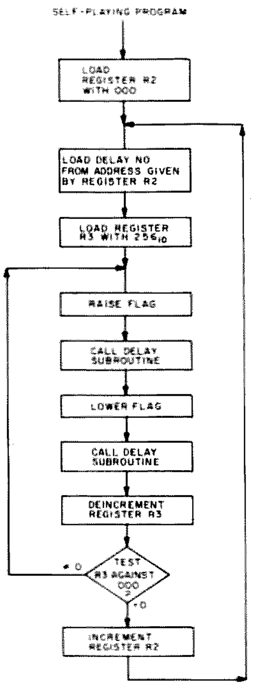

Fig. 4. Self-playing program.

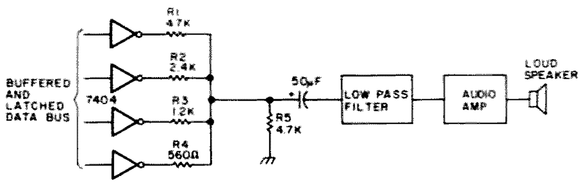

Fig. 5. Circuit of D/A converter for producing different audio waveforms. The low-pass filter may not be required in certain applications or if a constant frequency whine is tolerable.

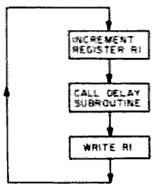

Fig. 6. Simple program to produce a sawtooth waveform. The sawtooth frequency will be given from 16 times the delay time.

time, sounded like a rhythmic base accompaniment, while the shorter high notes sounded like virtuoso improvising. The interesting thing was that, although I knew there was only one note being produced at a time (only one output), it sounded as if two instruments were playing together. The base-like rhythm seemed to be "continued." This program universally met with the reaction, "Well, it sounds like a computer, even though it doesn't look like one!" Since most of these critics had never seen or heard a computer, I don't know how they knew.

By now I'd really gotten the bug, and I was asking all sorts of questions: "Can a computer sing the blues?" Not content with a single flag output, I turned to the data bus. Here I could have up to eight different square waves generated at once, but, by then, I was beginning to think, "Can we get a different noise out of this machine?" So I made a simple digital-to-analog converter and brought back the interrupt oscillator.

The Hardware

The digital-to-analog converter is very simple. I chose to have a 4-bit one, since I could make it out of junk box resistors and have two on the data bus. It works quite simply. The output of the data bus is latched and buffered. Then it is passed through resistors R1-4 to a summing resistor, R5. The voltage on R5 depends on the logic levels on R1-4. With the values shown, a different voltage will be produced for each combination of inputs, that is, 16 different levels. The idea is to change the output every 0.1 ms or so. Here again, the delay program is used to produce an output at regular intervals. The time of the delay will determine what frequency whine will be produced, as well as the note. The frequency of the whine will be the same as the delay time. This can sound quite alright when the microprocessor is playing one of its own compositions, but it can be a bit annoying if it is playing a tune. This can be eliminated by placing a low-pass filter between the output on R5 and the audio amplifier. This will cut off the whine and let the notes you are creating come through.

If the register that is outputted is incremented, a sawtooth waveform will be produced as the counter ramps up to a maximum and then, on the next count, is zero. If a software instruction detects the presence of a maximum number and then causes it to de-increment, a triangle waveform can be produced. The frequency can be altered by not incrementing every time, but every other time. You can now produce even a sine wave, if you have trig function subroutines on your machine. However, production of tunes by this method is more difficult than in the earlier case. I found that each note required its own subroutine to produce it, which means that you need seven subroutines for a scale. However, it also means that you can have different sounds of notes, as well as frequencies, in a tune.

Where this method scored was in computer compositions. They really were quite good! To gain even more flexibility, an 8-bit D/A converter would be ideal, and I am saving up for one of those.

Finale

Having now gained approval for my little pet, whenever it is not singing to me, I try to do some work with it on what I originally intended it for – applications around my ham shack. But what is this? "Yes, dear, it can do most things. Yes, it can play games on TV, not just Ping-Pong™; no, other games, too. Well, perhaps I could just . . . " Oh no, here we go again! ■

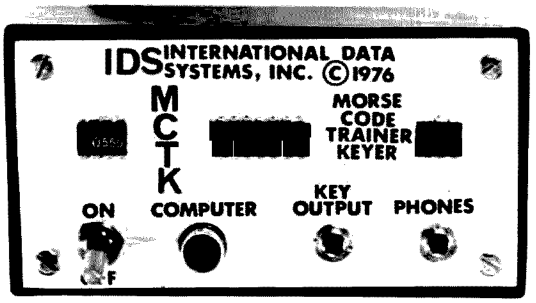

Irwin Doliner
P.O. Box 290
Owings Mills MD 21117

Hex Converter For True-Blue Octalists

—*BASIC program*

There are many good programs around to do an exhaustive memory test or other utility-type function. I am usually anxious to try all of them.

More often than not, these programs are listed in hexadecimal. This causes a small delay while I manually convert them to octal, since mine is an octal machine. Invariably, the first time I key in the program, it does not work.

My first reaction (refusing to accept my own fallibility) is to conclude that the magazine must have printed it incorrectly. On the off chance that I might have made an error, I next check to see that I keyed it in correctly. Alas! I find an error, correct it, and run it again. You guessed it! It still doesn't work. As a last resort, I check my conversion to octal (a tedious process at best). Normally, this also turns up at least one error.

Frequently, an hour or more may have passed before the first successful execution. Sometimes, at this point, I no longer care.

I can think of no way to avoid errors in keying in the octal data, other than taking greater care. However, I have written a program to do the conversion from hexadecimal to octal. This reduces the probability of error in one area, at least.

The program to do the conversion is shown in Fig. 1. The operation of the program is very simple: You will first be asked the starting address and base in which it is given. Any base from 2 to 16 may be specified, but you will probably want to use 8 or 16. Next, you input the hexa-

```
0 '    PROGRAM:        HEXOCTAL
       WRITTEN:        MAY, 1977
       WRITTEN BY:     IRWIN DOLINER

        '**  INITIALIZE SYSTEM  *

10 CLEAR(2000)
20 H9=INT((FRE(0)-400)/4)
30 DIMH$(M9),C$(15)
40 FORI=0TO15:READC$(I):NEXTI

        '**  GET ADDRESS AND DATA TO BE CONVERTED  **

100 PRINT"STARTING ADDRESS,BASE";:INPUTN$,B9
110 D=B9:GOSUB2000
120 A=N
130 PRINT"INPUT HEX DATA"
140 FOR H=0TOH9
150 INPUTH$:IFLEFT$(H$,1)="S"GOTO300
160 IF LEN(H$)=2*INT(LEN(H$)/2) GOTO 190
170 PRINT"NOT VALID HEX BYTES"
180 GOTO 150
190 GOSUB3000
200 NEXTH

        '**  PRINT HEXADECIMAL AND OCTAL LISTING  **

300 PRINT:PRINT:PRINT"---HEX----  --OCTAL---"
310 PRINT"ADDR  INST  ADDR  INST"
320 PRINT"====  ====  ====  ===="
330 PRINT
340 F$="\ \    \ \    \ \    \ \"
350 D=16:B=8
360 FOR C=0TOH-1
370 N$=H$(C):GOSUB2000:UOSUB1000
380 O$=P$
390 B=16
400 N=A:GOSUB1000
410 Q$=P$
420 B=8
430 GOSUB1000
440 A=A+1
450 IFLEN(P$)<3THENP$="0"+P$:GOTO450
460 IFLEN(O$)<3THENO$="0"+O$:GOTO460
470 PRINTUSINGF$;Q$,N$,P$,O$
480 NEXTC
490 GOTO4010

        '**  CONVERT FROM DECIMAL TO BASE B  **

1000 P$=""
1010 I=0
1020 J=N
1030 K=INT(J/B)
1040 I=J-B*K
1050 P$=C$(I)+P$
1060 J=K
1070 IFJ>0GOTO1030
1080 RETURN

        '**  CONVERT FROM BASE B TO DECIMAL  **

2000 L=LEN(N$):M=1:N=0
2010 FORI=1TOL
2020 R$=MID$(N$,L-I+1,1)
2030 FORJ=0TOD-1
2040 IFR$=C$(J)GOTO2070
2050 NEXTJ
2060 PRINT"INVALID CHARACTER IN ";N$:STOP
2070 N=N+J*M
2080 M=M*D
2090 NEXTI
2100 RETURN

        '**  SPLIT HEX DATA INTO TWO CHARACTER LONG STRINGS  **

3000 H$(H)=LEFT$(H$,2)
3010 IFLEN(H$)<3THENRETURN
3020 H=H+1
3030 H$=RIGHT$(H$,LEN(H$)-2)
3040 GOTO3000

        '**  RESTORE SYSTEM  *

4000 DATA 0,1,2,3,4,5,6,7,8,9,A,B,C,D,E,F
4010 CLEAR(200):END
OK
```

Fig. 1.

```
RUN
STARTING ADDRESS,BASE? 10,16
INPUT HEX DATA
? 1455FF123456ABCDEFAA1234ACDF11
? S

---HEX----  --OCTAL---
ADDR  INST  ADDR  INST
====  ====  ====  ====


10    14    020   024
11    55    021   125
12    FF    022   377
13    12    023   022
14    34    024   064
15    56    025   126
16    AB    026   253
17    CD    027   315
18    EF    030   357
19    AA    031   252
1A    12    032   022
1B    34    033   064
1C    AC    034   254
1D    DF    035   337
1E    11    036   021
OK
```

Fig. 2.

```
RUN
STARTING ADDRESS,BASE? 20,8
INPUT HEX DATA
? 1455
? FF
? 1234
? 56AB
? CD
? EF
? AA1234
? ACDF
? 11
? S
 ---HEX----  --OCTAL---
 ADDR  INST  ADDR  INST
 ====  ====  ====  ====
10    14    020   024
11    55    021   125
12    FF    022   377
13    12    023   022
14    34    024   064
15    56    025   126
16    AB    026   253
17    CD    027   315
18    EF    030   357
19    AA    031   252
1A    12    032   022
1B    34    033   064
1C    AC    034   254
1D    DF    035   337
1E    11    036   021
OK
```

Fig. 3.

decimal data. You may enter it as a single string (up to 254 characters long) or in several smaller strings. The only limitation is that the length of the string be even (representing whole bytes). When done, you enter "S" on the next prompt. Figs. 2 and 3 show two ways of entering the same hex data, and the resultant output.

The program will print the address and data in both hexadecimal and octal, in one byte increments. This allows double-checking the hexadecimal data before the tedious job of keying in the octal. ■

Michael Black VE2BVW
16 Anwoth Road
Montreal, Quebec
Canada H3Y 2E7

The Cheaper Beeper

—"Bell" for your CRT RTTY or uP

In the August, 1977, issue of *Kilobaud*, there was a short article on a tone generator for a microprocessor. While the idea is great and the circuit is simple, $7.95 for the DIP-alarm seems a bit steep. While it is probably best for the software freaks, it can be done less expensively by using junk box parts. See Fig. 1. While it isn't all that original, it is different from a lot of keyed 555 tone generators. I have often noticed with distress that people enable a 555 by grounding pin 1. Pin 4 is actually labeled "enable," and this circuit makes use of it. The transistor acts as an inverter to make things compatible with the information in the article mentioned above.

Perhaps the easiest method of construction would be to find a junked transistor radio and use the speaker and case from it. This would save you having to go to the trouble of mounting the speaker in some other box along with the extra trouble of drilling holes for the sound. None of the component values are critical. By changing either R1 or C1, the frequency can be changed. With the values shown, the frequency is about 600 Hz. For the transistor, I used an unmarked type off a computer circuit board, and just about anything will work.

If you want a tone when a "high" is applied to the tone generator, just disconnect the transistor and apply the signal from the uP directly to pin 4. For those of you interested in using the generator as a code practice oscillator, connect the side of the 100k resistor marked "from computer port" to the 5-volt supply, and connect your key from point "X" to ground.

Also, note that this circuit does not have to be run off 5 volts. It will work on anything from about 5 volts to 15 volts. As a CPO, it would probably be easier to use a 9-volt battery. If you're using CMOS in your uP and don't have a 5-volt supply, this circuit is particularly nice.

Well, I hope that this little article has helped some of you to save some money, and just remember that simplest is, not always cheapest. ■

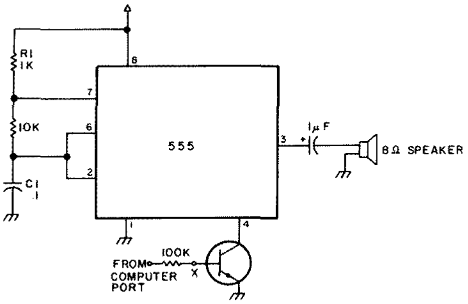

Fig. 1.

Semi-Instant Program Loading

—bauding up the SWT 6800

Photos by Roger W. Starr

Jack G. Starr WB4GXE
8221 Halprin Dr.
Norfolk VA 23518

The truth is out — the SWTPC 6800 can be made to run at 1200 baud. A number of other microcomputers will also operate at 1200 baud and faster. That's great, but what good does it do the hobbyist on a limited budget?

If money is no problem and an adventurous spirit doesn't exist, then there is no question. You can run right out and purchase a digital data recorder, such as one of those produced by National Multiplex Corporation, Compucorp, and others. These machines will do a bang-up job of storing data digitally on magnetic tape at speeds well in excess of the recently broken speed barrier of the SWTPC 6800. They will work at 9600 baud and rarely skip a byte.

No exception is taken to the obvious advantages of audio recording using the Kansas City Standard, except that it's too slow for my personal needs. I'm not interested in establishing any new standards. My only aim in what I have done is to speed up my system to utilize the maximum save and load baud rates available to me, thereby reducing record and load time. As a matter of fact, I am using the author's fee from this article to purchase an SWTPC AC 30 to complement my system and to provide me with the capability to exchange programs with other hobbyists — an advantage that I do not have with the reel-to-reel digital data configuration.

The Problem

For the underfunded (average) hobbyist, the answer can be found using a system similar to those built by some of the guys in Norfolk, Virginia. I found an old reel-to-reel Sony Model 464 tape recorder stuffed away in the corner gathering dust, and it served as the guinea pig for the experiments. I quickly decided that, as long as a TV terminal was to be used in conjunction with a computer, there was no reason to provide a separate clock circuit in the digital recording scheme. The fact that the terminal and the computer were compatible indicated that it would serve no purpose to record the clock data. This decision, which later proved to be correct, reduced the amount of circuitry to half what I might have needed. Then it was only necessary to obtain a circuit that would key the RS-232 line to the extent necessary to record digital data on the magnetic tape. To accomplish this with the minimum of effort and to keep from "reinventing the wheel," I researched the circuitry used by digital data recorder manufacturers with the intent of finding as simple a circuit as possible that would do the job.

What Was Done

The first item of business was to check out the condition of the old reel-to-reel tape recorder. The existing electronics worked, so it was a simple matter to make sure that an audio tape could be recorded and played back. This gave me certain assurances that the record/playback head was operable and that the machine worked in its original configuration. Next, the existing electronics were stripped out of the recorder, including the power supply. Because the recorder was of ancient vintage and a hybrid design, no effort was made to reuse or salvage anything. The power to the motor and the switch and fuse arrangements were reworked, as shown in Fig. 1. The mechanical operation came under attack next. All parts, pulleys, shafts, rollers, wheels, gears, and the turns counter were cleaned and lubricated to assure optimum operation in the recorder's new life as a peripheral to a microcomputer system.

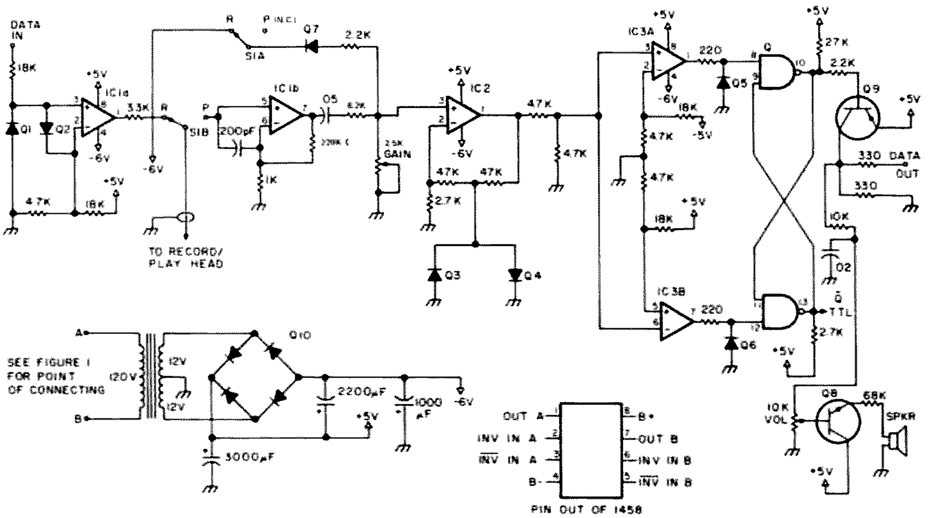

Fig. 1. Cassette interface schematic.

Meanwhile, circuits that had been used by digital tape recorder manufacturers were breadboarded and tested. The circuit decided upon was a takeoff of that used by National Multiplex Corporation in their Model CC-7 digital cassette recorder. It had the advantages of simplicity, economy, and parts availability. The circuit finally used in the conversion is shown in Fig. 1 and in the photographs. It was built on a Radio Shack plug-in perfboard and installed in a plug-in socket that was mounted in the tape recorder where the original electronics were removed (any plug-in board could be used).

How It Works

Remember now that you aren't dealing with audio in the sense of mark and space tones. The only purpose for the speaker circuit is to give an audible indication that data is being transmitted in the load mode. No audio signal is available in the save mode.

In essence, what you are doing is recording and playing back a full dc saturation of the magnetic tape. This method is also referred to as "no return to zero" (NRZ) because, unlike audio tones where you rest between the transmitted mark and space tones, there is no stop as the voltage swing passes zero. The dc saturations of the magnetic tape swing from about +5 volts to about -5 volts. I say "about" because it's not exact, and any combination that will record and play back without bombing is alright.

Looking at the data input circuit to IC1a, Q1 and Q2 are protective diodes which prevent the input from exceeding +5 volts and from dropping below zero volts. In conjunction with R1, this limits the RS-232 input or TTY level input to protect IC1a from input overvoltage. R2 and R3 are the biasing network which biases the second input to IC1a to about 1.2 volts so that the data input swings from about 0 volts to 3 to 5 volts and causes an output voltage shift from about -5 volts to about +5 volts. The output of IC1a is fed through the current-limiting resistor, R4, to the switch-controlled record and playback head of the recorder. About 1.5 milliamps of recording current is available at the head, which is sufficient to accomplish total saturation of the tape. If the record current is too low, it will not be sufficient to erase data when you rerecord over previous data.

IC1b is the preamplifier for the playback mode. Output of this high-gain amplifier is controlled by R7, the gain pot. (Some trial and error will be required here, but a good starting point is about 0.1 volts peak-to-peak.) This padding circuit controls the input of IC2a, which is used as an expander amplifier. As the gain exceeds about 30 to 1, it is no longer linear and rapidly jumps to the maximum output level of the amplifier as Q3 and Q4 clamp the feedback voltage.

IC3a and IC3b provide clipping of the signal. Cross bias controls one negative side and one positive side so that a signal below the bias level goes unnoticed. The output voltage of each section of IC3 is at 5 volts until a received signal exceeds either bias level, at which time it causes a negative swing which would appear on a scope, as shown in Fig. 4. The outputs of IC3a and IC3b are negative spikes which trigger gates of IC4a and IC4b, the RS flip-

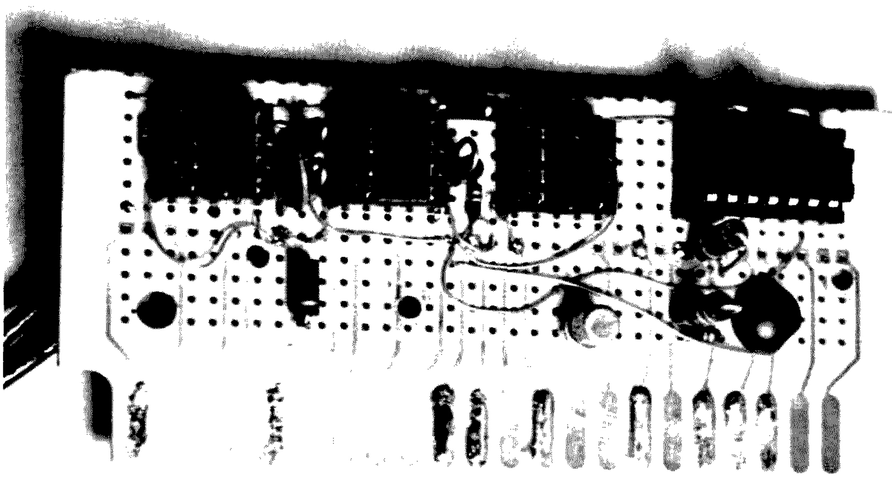

Photo A. Front side of electronics board.

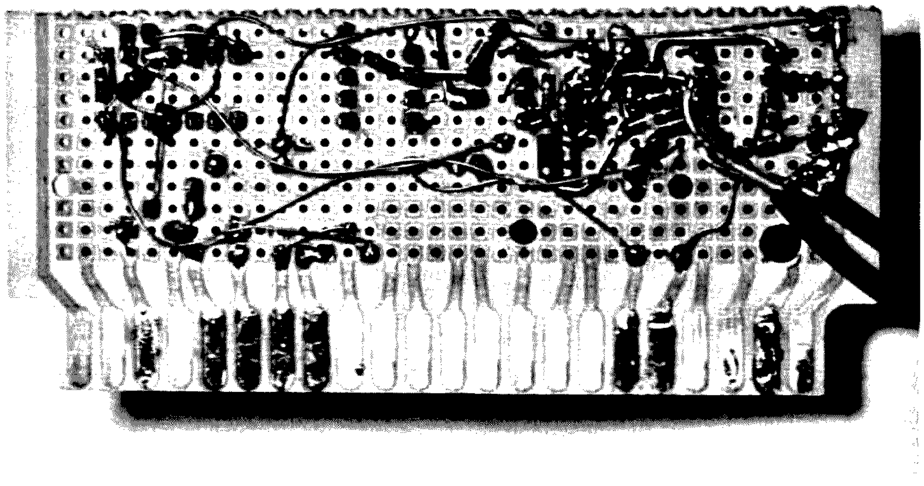

Photo B. Flip side of electronics board.

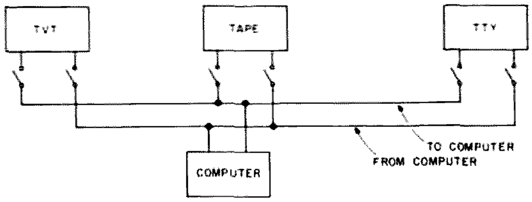

Fig. 2. Switching configuration.

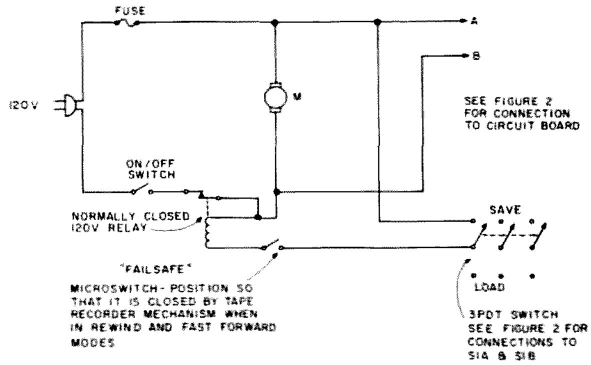

Fig. 2(a). On/off and fail-safe switches. "Fail safe" may be omitted, but rewinding or using fast forward while the load/save switch is in the save position will obliterate data stored on the tape.

flops. The Q and $\bar{Q}$ outputs of the flip-flops are purely digital in form. These outputs are buffered by transistor Q5, which acts as an inverter and provides drive for external RS-232 or TTY devices. Transistor Q7 connects the input of IC2a to -6 volts through the play/record switch which keeps the output in the mark state during start-up.

Using the Recorder

The digital data recorders reconstructed from old reel-to-reel machines have been successfully used with SWTPC 6800 and Imsai 8080 microcomputers. Basically what must be done is to isolate, by switches or relays, the RS-232 power supplies used by the TV terminal, the Teletype™ (if you have one), and the tape recorder. Such a switching arrangement is shown in Fig. 2. If you choose to use a more personalized arrangement to suit your preference and your microcomputer installation, the only thing to remember is that you have to isolate the RS-232 supplies.

Operating instructions are relatively simple and straightforward. For the purpose of this article, I will describe the operation using the switching arrangement shown in Fig. 2.

Record Procedure

To save a program by recording it on tape, it must first be entered into memory by some means, i.e., from a keyboard, paper tape, or audio cassette. The data to be saved must be stored in memory.

Using the operating system that you have resident, set up addresses of the program to be saved if you are dealing with a machine language program, or use whatever means you save a program with for your BASIC (or other) interpreter.

Make sure that the baud rate selector switch is set to the speed at which you want the program recorded (usually the fastest possible).

Assuming you are using a TV terminal, the TVT switches to the computer should be on; all others should be off. Then turn the TAP switch from computer on.

Turn the tape recorder motor on, and give it a few seconds to come up to speed. Put a tape reel on your recorder. Place the play/record switch in the record position, and start the recorder, noting the reading of the turns counter for retrieval of the program or data at a later time. Initiate the program-save procedure of your microcomputer.

Watch the data being recorded on your monitor. If for some reason the program bombs, you usually get a string of question marks from the UART or some similar indication of trouble on the screen. When the program is recorded, turn the tape recorder off, place the play/record switch in the play position, and turn the TAP from computer switch to off.

You should now have the program loaded on magnetic tape at the baud rate you selected. SWTPC 8K BASIC, which took 15 minutes to load from paper tape at 110 baud, was recorded at 1200 baud and could be loaded in less than 3 minutes. Computers like the Imsai that can be loaded at 9600 baud only take a "zip" to load.

Load Procedure

Using a program saved from your computer on mag-

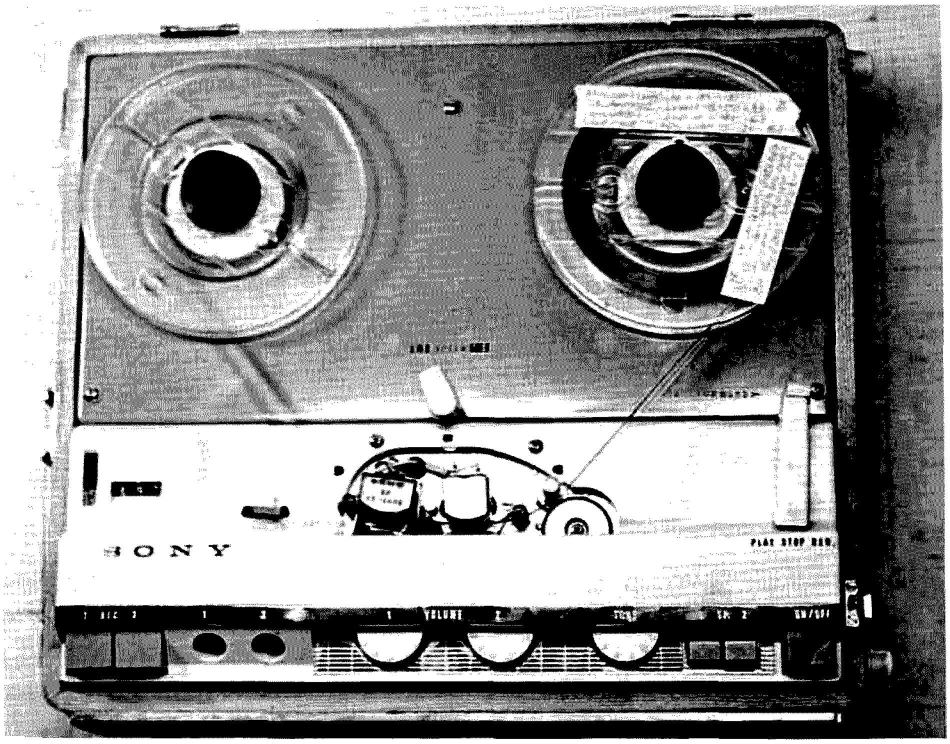

Photo C. Recorder loaded with tape.

netic tape, put the reel on your recorder and advance it to the start of your program. In the load mode, the recorder's speaker is activated to assist you in cuing up your program. You should hear an irregular buzz, buzz, buzz as the data is read from the tape.

Using your operating system, activate your computer to load a program. Check your baud rate selector switch to make sure it's set to take the same speed as the program (again, usually as fast as possible).

Assuming again that you are using a TV terminal, the TVT switches to-computer and from-computer should be on; all others should be off. Then turn the TVT-to-computer switch off and the TAP-to-computer switch on (this isolates the RS-232 supplies).

Turn the tape recorder motor on, and give it a few seconds to get up to speed. Place the play/record switch in the play position, and start the tape recorder.

The data being loaded can be monitored by listening to the speaker and, if you are loading a BASIC program, by watching the TV monitor. Machine language programs usually don't print on the monitor unless they bomb, and then it's a string of question marks or garbage. A BASIC program will print out on the monitor as it is loaded. When the buzz, buzz, buzz stops, the program is loaded. Turn the TAP-to-computer switch off and the TVT-to-computer switch on. Stop the tape recorder. You are now in keyboard control and can initiate the program using your microcomputer's operating system.

Advantages

You now have a digital data system for your microcomputer with the capability of saving and loading programs at high speeds. A five-inch reel of tape will store a tremendous amount of data and many programs. Depending on the speed you run your tape recorder, you probably will never use more than ten reels. It's suggested that you use quality audio tape, such as you would use for recording music, but, as long as it isn't too "dusty," almost any tape will do. Clean the heads, guides, and capstan with alcohol and a Q-Tip™ occasionally, and you are in business.

All of the parts for the conversion, including the transformer and capacitors for the RS-232 supply, were ordered from James Electronics for less than $20.00. The tape recorder has been in continuous use on two microcomputer systems for almost a year and has required zero maintenance other than head cleaning.

Digital data recording is highly recommended as a simple, economical, and effective means of high-speed data and program save and load.

Parts List

IC1-3	1458
IC4	7401
Q1-7	1N914 (or equiv.)
Q8	2N3643
Q9	2N3638
Q10	1-Amp bridge rectifier

Conclusion

Probably the only drawback in the system is the switching arrangement and the fact that I haven't been able to use the tapes for exchanging data with other hobbyists. By using a dual-trace scope, the heads of the tape recorders could probably be aligned so that tapes could be exchanged for like systems. I am considering solenoids for switches so that I can put the tape recorder under software control and use it for interactive mass data storage. If anyone cares to give me some helpful advice, I would certainly appreciate it. As you can see, I didn't "reinvent this wheel," and I won't with the switching if I find the brainwork has already been done. ■

Karl T. Thurber W8FX/4
233 Newcastle Lane
Montgomery AL 36117

The Super Select-o-Ject

—kill rotten QRM with this filter system

After reading a highly complimentary review of the Autek Research QF-1 R-C Active Audio Filter in another amateur publication,* I decided that the unit would make an excellent addition to the shack. It would be useful not only for SSB and CW work with the Tempo 2020, but also for serious BC band listening and SWLing with the FRG-7 general-coverage synthesized communications receiver in use at W8FX.

The unit, as supplied by the manufacturer, comes complete with input cables and output jack, being designed to simply plug into the headphone or speaker jack of practically any transceiver or receiver and drive either speaker or headphones to full volume. It has its own 1-Watt amplifier, as well as a self-contained ac-operated power supply. It features three modes of operation – low-pass, notch, and peak functions. In the low-pass mode, the unit provides a classic filter shape for SSB or AM reception, rejecting static, high-frequency receiver hiss, and adjacent-channel splatter, and with adjustable filter cutoff anywhere from 250 to 2500 cycles. The notch function allows very deep (up to 70 dB), narrowband rejection of heterodynes, TV oscillator buzz, and CB channel beats, and it is also adjustable over the 250-to-2500-cycle range with variable notch depth and width. In the peak mode, a "natural" for serious CW work, a narrow bandpass response for very sharp selectivity as low as 50 cycles can be obtained, yet it can be adjusted to a flat condition with the continuously-variable front panel controls.

Upon receiving the QF-1, I determined that it very handily met "specs" and was, indeed, an exceptionally fine unit, equaling or exceeding the manufacturer's claims in

*QST, "Product Review," March, 1977.

every way. In CW work, for example, it was possible to leave the Tempo 2020's tuning alone and actually tune in, virtually QRM-free, several CW stations inside the Tempo's excellent 600-cycle i-f filter passband – shades of the old "Select-o-Ject" of yesterday!

As supplied by Autek, the unit is designed to be inserted between the receiver and speaker or headphones. However, at W8FX, both the 2020 and FRG-7 are in use for HF work, so I needed some sort of switching device for convenience and flexibility of operation. The configuration I decided on would allow direct routing of either or both units' audio outputs to their respective speakers or through the QF-1 for processing. I also incorporated a conventional phone jack with speaker/phone switching in the device. As a final touch, a switch was added to cut in an alternate set of selectivity-determining resistors to substantially increase selectivity down to as low as 10-15 cycles for possible future moonbounce CW work. Use of the ultra-sharp position is a bit too narrow for regular CW reception, inducing a good deal of filter "ringing." The moonbouncer might want to try using a strip-chart recorder, as suggested by Autek in their instruction manual.

What evolved is the circuit shown in Fig. 1, incorporated into a Radio Shack #270-230 Bakelite™ constructor's box, measuring 3¼" x 2-1/8" x 1-1/8", which was mounted at the top rear of the QF-1 case. No physical modification of the QF-1 is required other than enlarging one of the ventilation holes at the top of the cabinet and installing a rubber grommet to allow the passing through of a short length of 7-conductor cable which connects the switchbox to the appropriate points in the filter circuit. The 15-Ohm resistors effectively parallel R4 and R9 on the Autek filter board, reducing their effective value to about 20% of nominal (47 Ohms) for selectable super-sharp CW work when the unit is used in the "peak" function. (In some models, R4 and R9 are 390 Ohms each, instead of the 47-Ohm units in my model. In such a case, the value of the paralleled resistors would be increased to about 100 Ohms to reduce the effective value of R4 and R9 to 20% of nominal.)

As there is no pilot lamp on the QF-1, a small LED installed in the side of the Bakelite™ minibox indicates whether or not the unit is on. A 9.1-volt zener diode provides a source of regulated dc to the box for future use and for a source of voltage for the LED. An SPST mini toggle switch allows selection of headphone or speaker operation from the filter output. The small "pot" and the extra mini toggle switch appearing on the front of the box are not connected, but are reserved for use with future mods.

All input and output cabling to both the receiver and the speakers is routed through the switchbox installed atop the QF-1; however, the audio cable, which previously served as the input to the filter and which connected to the receiver output, is reconnected to the *output* side of the filter (a convenient internal takeoff point is the front-panel headphone jack on the QF-1). It may then be connected to either an ac voltmeter or vertical scope input to aid in peaking or "notching out" signals, which becomes fairly critical in the narrowest selectivity positions. I use a Heath SB-610 Monitorscope as the display unit, connecting the cable to the vertical input terminal at the rear of the scope. Employing the scope as a visual tuning aid has been particularly useful in running with the 10 to 15 kHz bandwidth modification installed. It is also helpful in touching up filter alignment (R8 trimpot). Also, I have installed a "Y" adaptor on this cable so that it simultaneously feeds both the scope and a little FM rebroadcaster unit which is used in conjunction with an Archer/Radio Shack AM/FM headset for hands-off cord-free listening. The Archer unit is light enough not to become

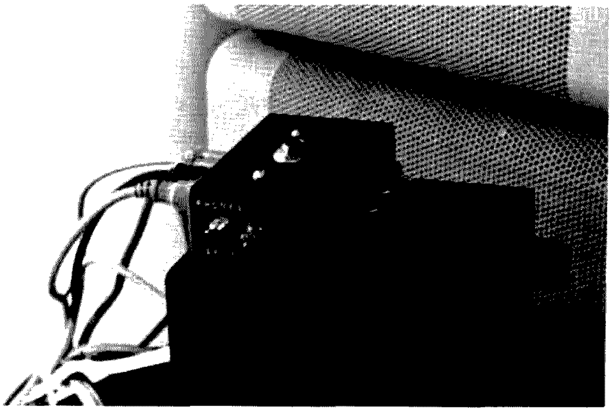

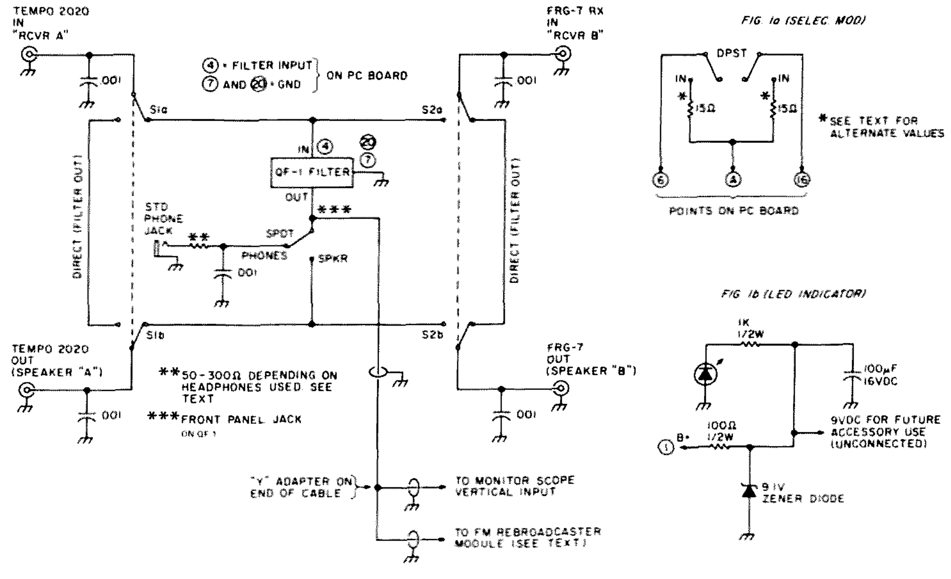

Fig. 1. All components are mounted in a Bakelite™ box which is mounted atop a QF-1 filter enclosure. The circled numbers and letters refer to QF-1 PC board terminal points labeled in the QF-1 instruction book. Seven-conductor cable routes all connections from the switch box to the QF-1 board. The "in" and "out" connectors are RCA phono jacks. The former QF-1 input cable is rewired to filter output (same point electrically as the front panel speaker/headphone jack) to provide output to the scope and the FM rebroadcaster module. The S1 and S2 sections are ganged (S1 and S2 are DPDT mini toggle switches).

uncomfortable over extended periods of operation.

The Autek filter comes adequately bypassed and filtered for RFI protection and should not normally give any trouble even when used with high-powered rigs (unless there is an inordinate amount of rf floating around the shack). However, installing the outboard switchbox could pose some RFI problems, due to signal pickup on the cabling; therefore, the bypass capacitors shown in Fig. 1 shouldn't be omitted from the circuit. In stubborn cases of pickup of signal from your own transmitter, try installing 1 to 5 mH rf chokes in series with the filter input, and/or try connecting a good ground directly to the case. If problems with hum pickup are experienced with low-impedance hi-fi-type headphones, they can be reduced or eliminated by experimentally connecting a 50- to 300-Ohm, ½-Watt resistor in series with the headphone lead. I have had no problems with either rf pickup or hum.

The results obtained using the filter/switchbox combination have far exceeded expectations. The QF-1 is certainly one of the best active audio filters available at any price (much improved over the old tube-type "Select-o-Ject" of fifties vintage). Used in conjunction with the switchbox, efficient use can be made of two separate receivers without the usual Rube Goldberg rat's nest of cabling or the inconvenience of manually plugging and unplugging the filter.

Even when interference isn't a problem, I find that running the filter in the circuit at moderate selectivity settings actually enhances audio quality with respect to both receivers and adds a certain presence to received signals, particularly on SSB. I have found that, for general-purpose monitoring, running in the low-pass mode with selectivity almost flat makes for very pleasant listening, cutting down considerably on splatter, hiss, and other objectionable noise. While the filter can be used to best advantage on CW, due to its super-sharp selectivity capabilities, it can be used with good results on SSB and even for serious BCB listening and SWLing, cutting down substantially on adjacent-channel interference and heterodynes.

At W8FX, the switchbox is used in conjunction with the Autek QF-1 filter, but, with some changes in wiring and the addition of a compact audio power amp module (Sanken and Ramsey both have available compact units generating up to a couple Watts of audio) and a source of power, the unit can be adapted for use with the MFJ SBF-2BX SSB filter or MFJ CWF-2BX CW filter. A larger enclosure would be required to house the power module and a small low-voltage power supply, if these filters are used. If a phone patch is used, connect it on the output side of the switchbox to allow processed audio to be fed to the patch.

As a sidelight for the economy-minded ham, who might own a transceiver such as the TS-520 or 820 or one of the Yaesu series which does not come with the (expensive) optional CW filter, MFJ manufactures a little-known mini CW filter board, for $11.95, which offers selectable 110 Hz and 180 Hz selectivity. It can plug into the receiver phone jack to directly drive headphones or be installed inside the receiver cabinet between audio stages for speaker operation. Requiring 6 to 30 V dc for operation, it offers good possibilities as a substitute for obtaining more expensive filters for the casual CW operator.

Whichever filter you use, build this little switchbox to increase its versatility in your ham shack. ■

Julian Rossnick
1012 Tyson Avenue
Philadelphia PA 19111

The IG-102 Goes Transistor!

—tubeless portability for this Heath signal generator

The Heath IG-102 radio frequency signal generator is a versatile general-purpose wide-range instrument of conventional vacuum-tube design which has been catalogued for several years. For those who have acquired the IG-102 in the past and those who are still looking for a good signal generator at a moderate price, this article provides a simple, economic, and fast means of conversion for portability without sacrificing the original qualities. Modification of the IG-102 gives the instrument new capabilities, as follows:

1. Battery operation utilizing either dry cells or a nickel cadmium rechargeable bank capable of supplying 7 to 9 volts at a maximum current of 10 to 16 mA.

2. With the use of rechargeable nickel cadmium cells of approximately 1.2 volts per cell, 6 to 8 cells are sufficient to provide the required operating supply voltage. The basic radio frequency circuit will operate with a minimum of 4 volts throughout its frequency range. For charging purposes, a self-contained battery-charging circuit is used which employs the original components (these can be dispensed with if dry cells are installed).*

3. All tube sections are replaced by four field effect transistors, such as those available from Radio Shack — #276-1623** — or Calectro — #K 4-634.

Procedure for Modification

The following step-by-step instructions apply to changes and additions to the basic IG-102 radio frequency signal generator. Accordingly, the original instruction manual and drawings are used for reference to detail the modification procedure. This procedure involves simple changes, installation of new components, and constructions. Before undertaking the modifications, I advise that you spend some time studying and reviewing the basic circuit and assembly to become familiar with the original layout. Additionally, study the details of the field effect transistor connection lead designations. In the assortment provided in Radio Shack's #276-1623, three types are referred to in the designation of leads. With reasonable care, there should be no difficulty using any of the transistor types.

1. Refer to Fig. 1, a copy of the original circuit.

2. Remove all tubes, if the set has already been constructed.

3. Unsolder and disconnect power transformer connections (filament supply line and high-voltage rectifier-filter system), and reconnect the power supply components as shown in Fig. 2, using additional components as needed.

4. Solder a 75-Ohm, ½-Watt carbon resistor across the R2 (33k, 2 W) decoupling resistor used in the original circuit.

5. Solder a 90-Ohm, ½-Watt carbon resistor across the R6 (4.9k, 2 W) decoupling resistor used in the original circuit.

6. Spot solder one radio frequency field effect transistor across tube socket V1B, terminals 1-2-3, using the lead references given in the transistor package instruction sheet. However, if transistors are selected from the 8-transistor assortment given in Radio Shack's packet #276-1623, then lead orientation should be followed as per the drawing supplied in the packet.

To mount the transistor on the tube socket, do the following: Hold each lead with long-nose pliers (for a heat sink) as solder is applied. Use a 35- to 40-Watt pencil iron with a small blade tip 1/8" wide, and solder alloy 60-40. Apply a small drop of solder to the end of each lead. After thinning the leads, spread them to match the spacing of the lugs on the tube socket. Apply each lead to the required tube socket terminal, as designated above (to facilitate connections, also apply fresh solder to the

* Installation of the battery supply is simple, since there is ample chassis space available to mount battery brackets for accommodating the battery units.

** Some of these Radio Shack #276-1623 packages contain assortments of *both rf and af* field effect transistors. In testing them, the af types will not oscillate. One particular type which responds well at radio frequencies is the 2N5951. The white-black types are af and do not oscillate at radio frequencies; also, the metallic types are unsuitable.

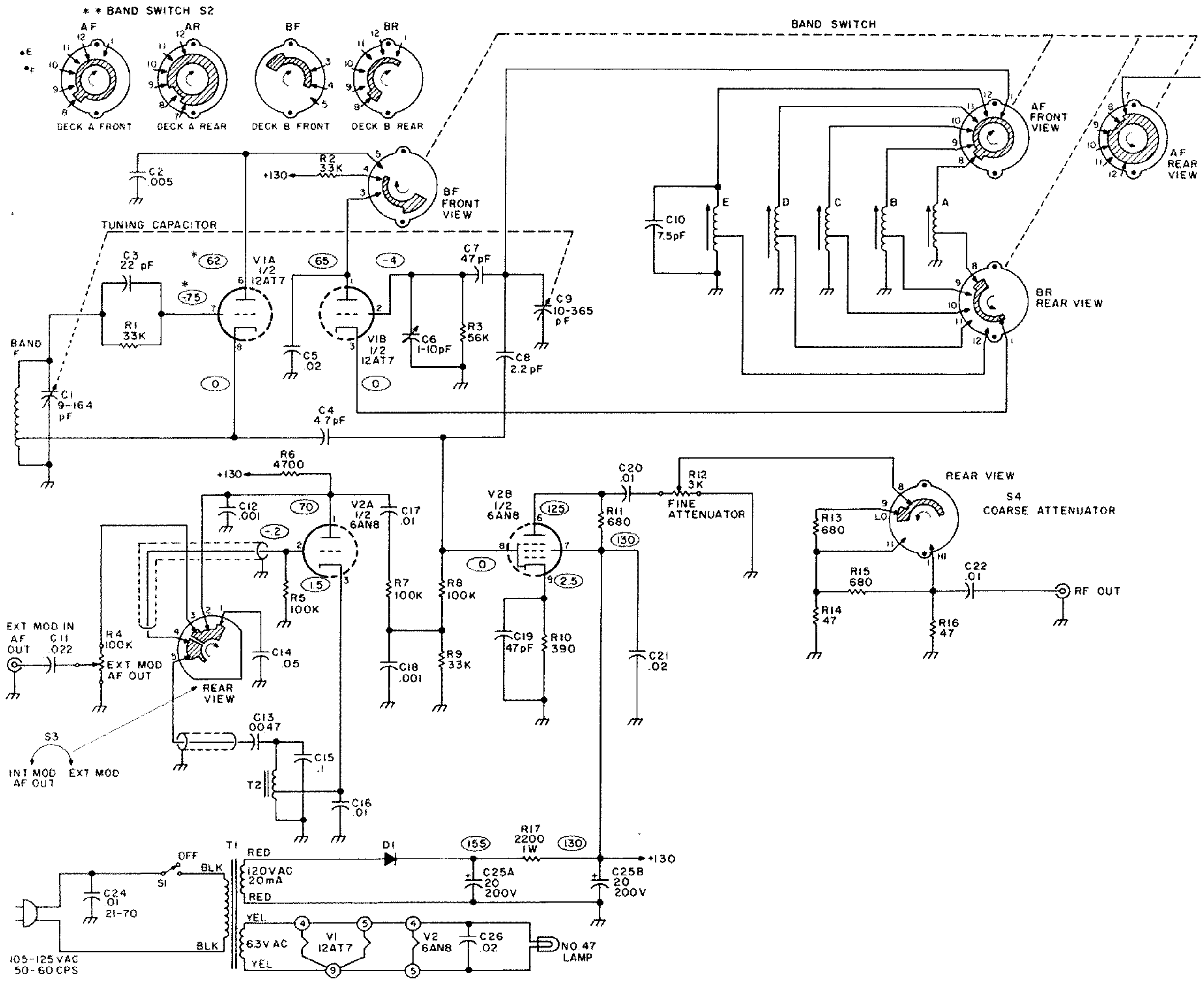

Fig. 1. Original IG-102 circuit.

tube-socket terminals).

In spreading the transistor leads, a slight bend on the wire ends will help in making surface-to-surface contact for soldering. With the pliers, hold each lead against the surface of the required tube-socket terminal, and apply the iron to the opposite side of the terminal until solder flows well to form a good spot-solder joint. No mechanical connection is necessary to complicate the procedure. Once the first transistor lead is soldered, it will make the transistor self-supporting, and the remaining solder operation will be easily handled and completed. Remember to use the long-nose pliers as a heat sink for "pushing" the transistor leads against the tube socket terminals when soldering. Care in soldering and applying the transistor leads will insure success and avoid thermal or mechanical damage to the components.

7. Following the same technique for soldering as explained in step #6, apply and connect another rf field effect transistor across the tube socket 1A, terminals 6, 7, and 8.

8. Apply and connect the third rf field transistor to tube socket 2B, terminals 6, 8, and 9.

9. Apply the fourth field effect transistor to tube socket 2A, terminals 1, 2, and 3. (If another type of FET transistor is used, make certain that the proper transistor leads are used to make connections.) Again, it may be more convenient for making connections to turn the transistor over (round side up) and cross the D and G leads (use insulated sleeving).

Step #9 completes the modification conversion of the basic IG-102 rf signal generator. Additionally, I installed rear tip jacks with the circuit connection leads to permit external testing of the battery supply (+) and (-).

Test, Operation, and Adjustment

1. Before applying battery power to the circuit, check the positive-to-ground resistance to make certain that there is no short circuit or abnormally low resistance reading due to a defective

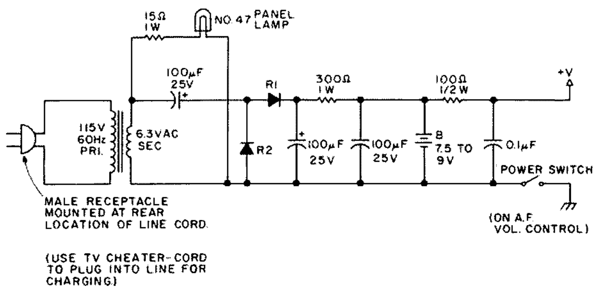

Fig. 2.

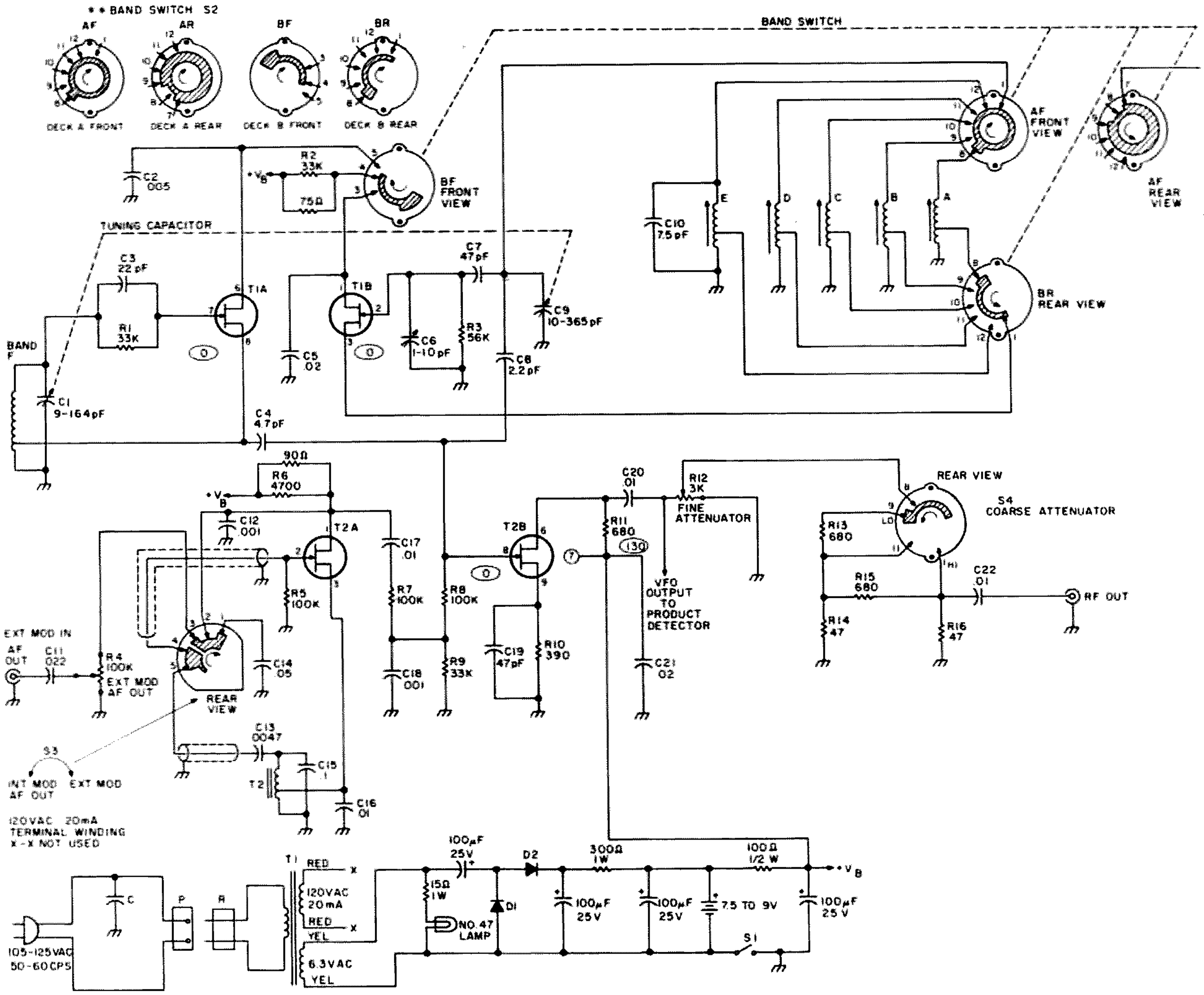

Fig. 3. Modified IG-102 circuit. T1A, T1B, T2A, and T2B – four rf FETs equivalent to Radio Shack package #276-1623 or Calectro #K 4-634.

component or wiring condition. Rotate the bandswitch while checking the resistance to ground (which should be several hundred Ohms, at least).

2. Insert a milliammeter in series with the battery, and check the direct current on all bands, which should be 7 to 15 mA. Switching in the audio tone oscillator-modulator will increase it about 1 mA.

3. Rf output. A diode detector rf voltmeter applied to the high end of the fine attenuator control (turned counterclockwise for minimum rf output) should indicate about 1 to 1.25 volts on band "A" (low-frequency end), and, on each successive band, it will drop off progressively. Nevertheless, rf output should be detectable on all bands.

Vary the tuning on each band from low to high end – the rf voltage should vary smoothly (usually decreasing) without the sudden jumps or falloff usually associated with parasitic absorption conditions.

4. Audio tone oscillator modulator. The ac output of the audio tone oscillator, as measured across the audio output control, should be 1 to 2 volts. Check the tone frequency with a pair of headphones connected to a 0.1 uF coupling capacitor. Finally, use an allband receiver or grid-dip meter, if available, to check the rf output frequency. The frequency response in each band should be within a few percent and not need any alignment or tuning adjustments.

Heterodyning with broadcast stations will show excellent frequency stability. On band "F", use an identifiable FM station to spot check the frequency calibration in the 88 to 108 MHz range. I found it necessary to "squeeze" the rf coil to about one-half its original length to get good frequency alignment. Use the long-nose pliers to squeeze turns. To check against an FM station, turn the audio modulation on, connect the rf cable, and bring it near the FM receiver's vertical antenna. A good clean modulation note should be heard when the signal generator passes through an FM station.

Conclusion

I modified the original circuit by converting to the battery-operated solid state design, as described. In addition, a three-crystal oscillator frequency-spotting standard was installed with a product detector and audio amplifier speaker section. This combination provides frequency check intervals of 100 kHz, 1.0 MHz, and 10 MHz, for spot-checking the internal six-band vfo or for external testing. Using the crystal standard, heterodyne testing showed excellent frequency tracking and calibration through the six bands. Since there is ample chassis space available, the three-crystal

frequency spot circuit is left optional and is merely suggested to you. For this purpose, in a more extended project, three crystals and oscillator design data can be obtained from Jan Crystals, 2400 Crystal Drive, Ft. Myers FL 33901. Additionally, a dual-gate MOSFET product detector, a 250 mW integrated audio power amplifier, a miniature volume control, and a 2½" loudspeaker can be combined to provide the desired frequency-spotting function.

Fig. 4 shows a circuit which incorporates the additional features just described — a three-crystal oscillator frequency section with a product detector and an audio power amplifier for monitoring the heterodyne reactions between crystal frequencies and the vfo spectrum. The entire unit can be easily and conveniently mounted in the rf signal generator chassis assembly or separately assembled externally as a subunit. Heterodyne activity can be detected up to the 50th harmonic. With additional wave-shaping amplifiers, the harmonic order could be extended considerably, but, unfortunately, that would involve high input current levels which would place excessive demands on the battery power supply. ■

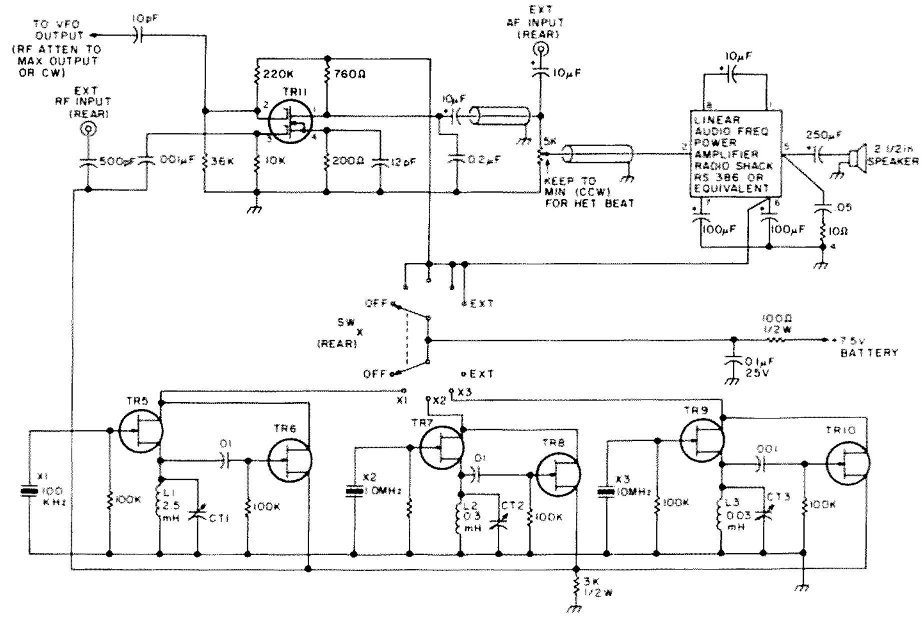

Fig. 4. TR4-TR10 — Radio Shack #276-2039 or equivalent; TR11 — dual-gate MOSFET; CT1 — Arco 309 padder; CT2 — Arco 306 padder; CT4 — Arco 465 trimmer; L1 and L2 — rfc; L3 — 20 turns #30 enamel wire on 2W, 100k resistor.

New Products

from page 60

($15.95) way of quickly learning and appreciating the advantages of the solderless breadboarding approach.

The PB-6 Proto-Board Kit comes complete with a preassembled breadboarding socket, two preassembled solderless bus strips, four five-way binding posts, a metal ground base plate, non-marring feet, and all required hardware. When complete, its six hundred thirty tie-points permit flexible configurations of as many as six 14-pin DIP ICs.

Despite its low cost, the PB-6 provides a very confident breadboarding base. Of the four binding posts, one is grounded to the ground base plate, permitting high distributed capacitance and low distributed inductance for enhanced high-speed circuit operation. The three remaining five-way binding posts can be used to interconnect the circuit on the PB-6 to power and signal lines and the outside world.

Following the easy assembly instructions enclosed, using only pliers and a screwdriver, assembly time for the PB-6 is less than ten minutes.

For further information, contact *Continental Specialties Corporation, 70 Fulton Terrace, New Haven CT 06509.*

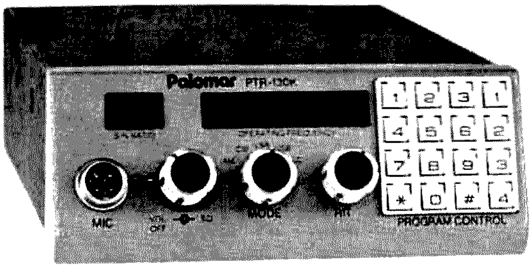

The Palomar PTR-130K transceiver.

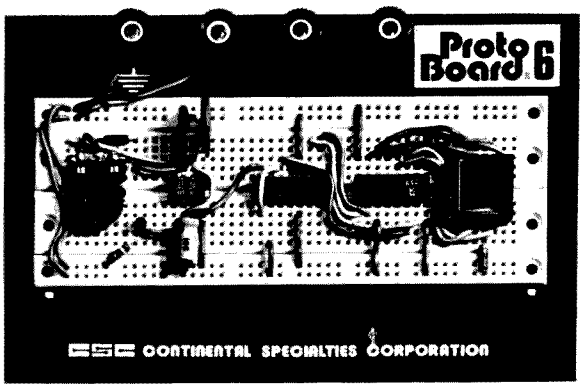

CSC Proto-Board 6.

Al Klein W2PMX
206 Harrison Avenue
Miller Place NY 11764

The Miser's Delight Repeater Controller

—the very ID!

It all started when WR2AKV decided to go on vacation. Repeaters must have strong unions, because this one hasn't been heard from since. Steve WB2ZSE modified a GE Prog desktop base, and another WR2AKV was on the job. The only problem was that the original repeater had been borrowed, and the control circuitry went with it. We still had the old Ma Bell touchtone™ decoder, but we needed something for more immediate control. Since I am cheap above all else, I decided to see if I could design a controller for the new repeater for less than the purchase price of a store-bought one.

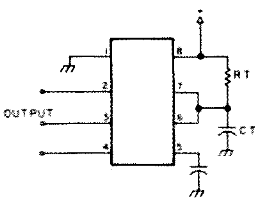

Fig. 1. 555 resettable timer.

The controller had to meet a number of logical criteria:
1. Variable time-out timer.
2. Variable squelch-tail timer (the time the transmitter stays on after you drop your carrier; the short burst of noise as you drop it is called the squelch burst).
3. ID after the input carrier is dropped, so the ID can be kept nice and loud and not take out the repeated audio.
4. ID on cold start-up (after the repeater has been sitting idle for more than the ID interval), but the repeater should not turn itself on just to ID.
5. Reset the time-out timer on loss of the input signal, as opposed to requiring the repeater transmitter to drop out.
6. Have as few parts as possible (preferably none!) because parts cost money!

In keeping with the last, but most important, rule, I etched up a board for the K4EEU ID, violated prime directive number 6 (had to buy a few parts), and we had a working ID.

The next step was to look at the above criteria through the rules of logic, and the best answer seemed to be the 555 operated as a resettable timer. According to rule 6, I should have used one 555 and one 556, but the increased complexity (and the possible need to go to double-sided board or a lot of jumpers) justified the negligible price difference. In Fig. 1, if either pin 2 or pin 4 of the 555 is low, the output on pin 3 is low. If both pins are high, the output will be high for a length of time determined by the time constant Rt-Ct. At the end of this time, pin 3 will go low. If pin 2 is now brought low and then high, the output will go high when pin 2 goes high, and it will stay high for another time constant. That seems simple enough — just have two such timers operating in a sort of back-to-back configuration. One of them has pin 3 going high when there is an input signal, and it stays high for the duration of the time-out period. The other one has pin 3 going high when the signal leaves the receiver, and it stays high for the squelch-tail time. The transmitter will be on the air if either one has a high on pin 3. A third timer counts a little less than 3 minutes and then allows the COR to start the ID the next time a signal leaves the receiver. This obeys rules 3 and 4. The only thing left is that nasty little rule 6. So, after getting the thing to work and then removing parts until just one more removal will stop it from working, I arrive at Fig. 2.

We start with the repeater having been inactive for some time so that, due to the +5 volts on pin 4 and a high on pin 2, IC3 (the ID timer) has timed out, and pin 3 is at ground potential. The situation over at IC1 is the same, except that pin 4 gets its high from the output of IC5a. When the COR input goes to ground, it gets delayed just enough by the input circuitry so that pin 6 of IC4 goes low after any contact bounce. This sends a positive-going pulse to pin 3 of IC5d. This is inverted to a negative-going pulse at pin 4, resetting IC2. The high from pin 6, IC4, brings pin 4 of IC2 high, and IC2 starts timing, resulting in +5 volts on pin 3, which is fed to the relay driver transistor, turning the transmitter on. If a signal stays on the input for more than the time-out time, IC2 times out, pin 3 goes low, and the transmitter goes off the air. So much for rules 1 and 5.

With loss of received signal, the output of IC5a goes high, putting +5 volts on IC1, pin 4. The capacitor feeding pin 5, IC5b converts this to a positive-going pulse which, when inverted by IC5b, resets IC1. This starts IC1 timing for the squelch-tail time, producing a high on pin 3 for this duration. Add this high to the high coming from pin

3, IC2, and the relay driver is on for the duration of the input signal plus a squelch tail (assuming that IC2 hasn't timed out). There is a third diode feeding the relay driver. This diode is fed by the ID generator, so the repeater doesn't drop out while it is identifying. (See Fig. 3 for the modifications to the K4EEU ID.)

All this time, pin 3, IC3 has been at zero volts. This low is inverted by IC5e to a high on pin 10, effectively taking D2 out of the circuit. When there is a signal on the input steady state, pin 6, IC5b is high, so pin 8 is low, pulling pin 13 low. This is inverted by IC5f, producing a high on pin 12, which does nothing for the K4EEU IDer. When the input carrier is dropped, IC5b, pin 5 gets a positive-going pulse, and the entire chain is reversed in polarity, so that IC5c, pin 8 goes high for the duration of the pulse on pin 5. This high is inverted by IC5f (as before) to produce a low-going pulse to the IDer, thus starting it. The low-going pulse on pin 12 also resets IC3 (via its pin 2), bringing IC3, pin 3 high (for the ID time duration). This high is inverted in IC5e, producing a low on pin 10 and holding IC5f, pin 13 low, even if the COR is subsequently dropped, until IC3 times out. Referring to Fig. 3, when the low-going pulse is applied to the start flip-flop in the ID, it is applied to the point labeled "to point 1." This sets the flip-flop and brings the other connection (labeled "to point 2") high. This is used as transmitter turn-on voltage, keeping the transmitter on for the duration of the ID.

Due to the fast action of the circuits involved, if the contact debouncing circuit (the input circuitry of IC4) was not included, saving some parts, the first contact bounce from the COR (and it will bounce a few times) would appear to be the COR dropping out, and the ID would start. With the debouncing, the ID will only start when the input signal drops.

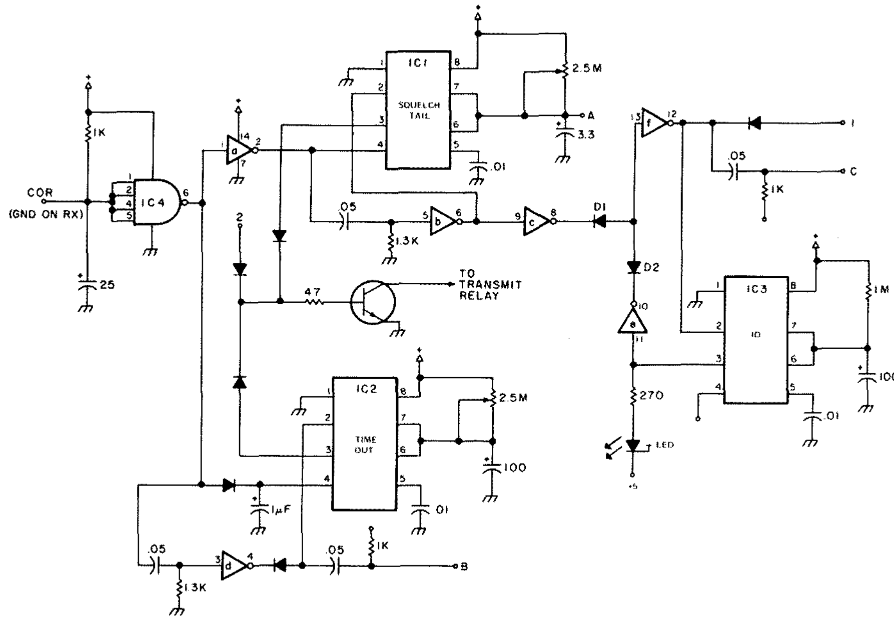

Fig. 2. IC1-3 — 555; IC4 — 7413; IC5a-f — 7404. The diodes can be any silicon diodes: The transistor is dependent on the current requirements of the transmit relay — anything from 2N222 to 2N5655.

One fortuitous error developed in the final wiring of the repeater. Steve decided to wire the receiver audio through the COR so that, when the COR dropped out, there would be no audio coupled to the transmitter. (I still don't see where it would come from.) Due to the fact that the K4EEU IDer has very high level audio coming out of it and we are coupling into the mike input of the transmitter, we ended up with quite a large value of series resistance between the ID and the transmitter input. If the COR is picked up during the ID, the voltage division effect caused by the receiver impedance drops the ID to about 1 kHz deviation. So we not only make provisions to keep the ID from stepping on anyone, but also, if someone steps on the ID, it is nice about it and lets his audio go through.

With the values shown, the ID time is about 2:45, the time-out time is variable from 0 to about 7 minutes, and the squelch tail is variable from 0 to 12 seconds (dependent on the tolerance of the timing capacitors). This squelch-tail time is a bit longer than needed, but the only correction, without getting a custom-made pot (which would probably cost more than the whole controller), would be a 1-meg pot and a 250k series resistor. The fixed resistor costs money, and they don't charge for pots by value (yet!).

The external connection point on IC1, pins 6 and 7 (point A) is controlled by the touchtone™ function decoder, and, if it raised to +5 volts, there will be no squelch tail, which is invaluable for discouraging kerchunkers. If they don't hear it coming back, they leave it alone! The external connection to the ID start line (point C) is grounded to start the ID before IC3 has timed out. Grounding this point will also reset IC3, so the next ID will be 2:45 after the manual ID, just as if the repeater had IDed itself. This function can be left off (simply delete the resistor and capacitor at point C) if it is not wanted. The external connection to IC2, pin 2 will reset IC2 if some dummy like me (I have been told that I can probably time out '52 direct) forgets when to shut up. This one goes to ground to reset. Of course, if the long-winded one (a plague on his thumb) is running 50 Watts from on top of the repeater, you won't be able to override his signal to reset the timer, so just let him talk to himself.

In view of the requirement to eliminate everything, how about the capacitor from IC2, pin 4 going to ground and the diode feeding it? The system has a tendency to act so fast that IC2 turns off at loss of received signal faster than IC1 can start the squelch tail. This can destroy a good relay, so it is an insurance policy. If your transmit relay is big and sluggish, you could probably save another two parts.

One area that is a bit tricky is the use of the 1.3k

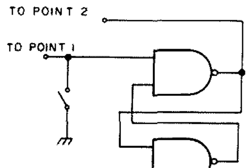

Fig. 3. Modifications to K4EEU ID.

resistors at pins 3 and 5 of IC5. If they are too large, the inverters will remain in the low output state. If they are too low, the resulting pulses will be too small to be of any use. 1.2k seems to be the lower limit, and 1.5k is just a bit too high. If you have any trouble here, use a pot or substitution box, and, starting with about 2.5, slowly lower the resistance until the output pin (of whichever section you are adjusting) just goes high. Use the next smaller value. That was exactly how I arrived at 1.3k.

One problem that we did have was that the transmitter seemed loath to turn off. About one time out of three, the squelch tail would run out, and the blasted thing would retrigger itself. The culprit proved to be the spike generated by the T/R relay in the Prog when it went from transmit to receive. A diode across the relay coil solved that one.

Getting back to rule 6 (again?), I put the LED (and another one on the collector of the transistor) in the circuit so that I could see what was happening without clipping on a meter or something, and, since it didn't cost anything to leave it in, I did. The one on the collector of the transistor can be left on (from the collector to +5 volts through a 270-Ohm resistor) if your relay runs on 5-6 volts. A 12-volt relay supply here will cause permanently dark LEDs, without some resistor adjustment.

The circuit is very simple to build on perfboard, but, if you want to keep everything neat, I can supply 4" x 6" PC boards, drilled, with 22 edge fingers etched on but uncommitted, for $8. If you have any trouble, drop me a note with an SASE.

Thanks to Steve and to Bernie WB2DQH for the use of their experience, knowledge, shop, tools, test equipment, and time. ■

Ham Help

I am writing this letter in hope that it will keep some other young prospective hams from making the same mistake I did. I became interested in ham radio in August, 1976. This interest was kindled by a person who had just moved to our town and was studying code for his Novice exam. I guess you could say that I had always been interested in radio but had never heard of amateur radio before. A neighbor had given me an old telegraph key and sounder, which I had messed around with from time to time.

The mention of Morse code aroused my interest, because I had always wanted to learn what all those little dots and dashes meant. On the spot, I volunteered my services to help him learn the code if he in turn would teach me. After a couple of nights of practice, I had the letters down pat. Wow! Just like that, I had learned something that I thought would take months.

With this newfound talent, I was ready to take on anything. I was therefore quite easily convinced to go all the way and get my speed up for the Novice exam. As I mentioned before, I had no knowledge of or interest in ham radio. When this guy gave me the facts about ham radio, it just about blew me over.

Maybe I should mention here that this man had a brother who was a licensed General and was crazy about radio! This guy almost lived, ate, and slept just to work his rig. Well, this guy kept our interest up for the 3 months it took us to get up to 7 wpm. After we had our speed up, we contacted this man's brother (he lived about 40 miles away) and said that we were ready to take our test. We drove to this guy's town and took our code test at some other ham's house. After the worst case of the shakes I've ever had, we got through the test. Hey! Now, that wasn't so tough! If that's all there is to it, no sweat! Oh, so little did I know!

After we finished the code test, we made another date to take the written test. Now, this was the first I'd ever heard of any type of written test. I was shaken! But this guy's brother said not to sweat it, it's real simple stuff. Sure it is! He said that it was some questions on operating procedure, rules and regs, and some simple radio theory. Operating procedures, rules, and regulations sounded like it wouldn't be too tough. But radio theory! It had better be simple.

Well, he gave us a Novice study guide and told us to go over the questions for a couple of weeks, come back to his place, and he'd clear up any questions we'd have. Okay, that sounded simple enough. We took it home and studied the questions. In fact, about all we did is memorize the book. In two weeks, we went back to his place for a whole day of just going over this stuff. Gee, this was simple if that was all there was to radio theory. He told us to come back in a couple of weeks to take the written exam.

At about this point, I became worried about (if I did pass this exam) what I would do for a radio. My friend told me that there was no problem, that he'd buy one and I could use it. With that little problem out of the way, I kept up on my code and kept studying for the exam. I took it and passed it okay, but only on operation and rules and regulations. The thing was, none of the questions on this test were the ones from the book. Oh, well, I guess I could forget that as long as I could get my license and start making contacts.

Well, about two weeks after we got our licenses, I asked this guy (he'd passed, too) when he was going to get a radio. He said, to my surprise, that he *might* get one someday, but for the meantime he'd lost interest. It made me kind of mad, but I figured I could get along without him. I'd just have to get my own radio!

That's how I came across my first issue of *73 Magazine*, the December, 1976, one. It blew my mind. About all I could understand was the advertisements! Now I realize what had happened. I was taught how to pass the test, not anything about ham radio. Man, I was mad—I still get kind of angry when I think about it. Needless to say, it was the end of a relationship.

One of the things I did learn from that first issue was that there was no way I could afford a radio. My only income was 5 dollars a week for working from my folks. With my knowledge of electronics (hah!), building a radio was entirely out of the question.

Things lay dormant for quite awhile, about six months. Occasionally, I'd pick up an issue of *73* to page through. Every issue made me more angry about what had happened to me. I picked up a little knowledge from each issue, and from library books, so that I at least knew how to figure resistance and identify some simple components.

At about that time, my prayers were answered. Our small town lacked someone to fix TVs, radios, etc. We finally got someone who moved in and started to do these things. It just happened that our old set had been acting up. The man was called and asked to come and take a look. Well, this guy came and started to work on this set. Naturally, I watched with a great deal of interest.

He asked me if I knew anything about electronics. I told him much the same story I have just told you, whereupon he told me that before moving here and becoming a repairman, he had worked for a major radio company as just about the only person involved on a full-time basis with radar. He commended me for my dedication in trying to learn about this subject. He said that any time I had a question about radio I could just come and see him.

In the past year, I've learned more about electronics than I ever thought possible. I still don't know very much, but at least I'm back on the track again. Still, one bad thing has come of all this: I still don't have a radio, have never operated one, and wouldn't even know how if someone gave me one. I've all but forgotten the code; I can't find anyone who's interested. I am the only amateur within miles.

My repairman friend gave me an older six-channel CB that I am trying to get transmitting so that I can use it on 10 meter CW. He also gave me an old oscilloscope for nothing. He told me to play with it, that I'd probably learn something. Even if I do get the 10 meter rig going, I still wouldn't know how to make a contact.

Well, so much for my hopeless case. As I said when I started this letter, I'd hate to see this happen to someone else. Unfortunately, our high school does not have a basic electronics course, or my problem would have been solved. I think that something should be done about this type of thing. Oh, learning by rote is an easy way to get into amateur radio, but is it the *right* way? I don't think so, and I think you'd probably say the same thing. Something has to be done.

Novice classes seem like a darn good idea. The only trouble is finding one. I'd love to go to one! But where are they?

Mark Malm WB0YHW
PO Box 323
Flasher ND 58535

David Boyd K9MX
601 Pioneer Ct.
Waukegan IL 60085

Max Boyd N9MX
Route 2, Box 960
Collinsville IL 62234

Another Ten Minute Timer?

—yup

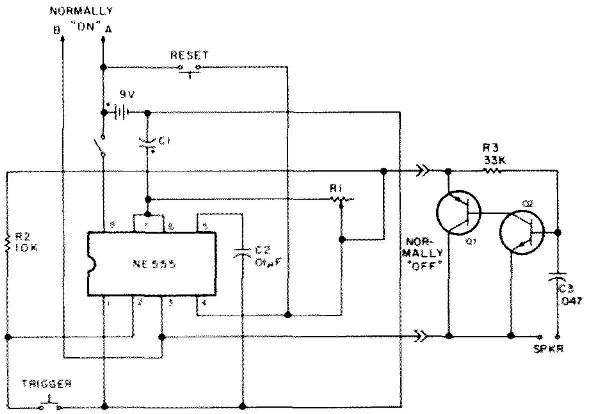

Fig. 1. Schematic.

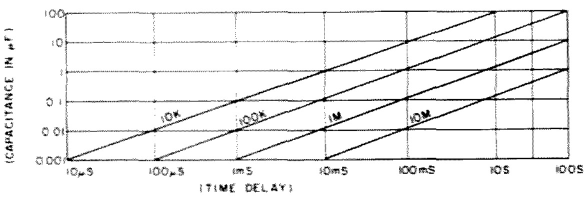

Fig. 2.

Just about every other issue of every amateur magazine carries an article on a clock or timer of some sort. Unfortunately, most are involved enough that the average ham junk box lacks at least a few of the components (usually the most expensive ones). And, usually, each one is designed for a special purpose, like preventing an HT or mobile rig from timing out a repeater, or includes fancy functions, like an automatic reset provision or a digital elapsed-time display or some other hybrid function that limits its versatility and raises its cost. For a father of four (including a set of twins) and a retired soldier, they all cost too much.

Since both of us are a bit long-winded, we sometimes forget the time in a QSO, so what we needed was a simple timer capable of triggering an audible alarm every ten minutes. Of course, it had to be simple enough that it could be built entirely from our junk boxes.

The result is a super simple timer that is flexible enough to allow for the addition of all sorts of nice features at a future time. The version we built consists of a single NE555 (any 555 IC will do) and has a simple audio oscillator installed on the same board. The delay can be fixed at any value you choose simply by selecting the proper combination of resistance (R1) and capacitance (C1). A pot covering a suitable range can be employed if you need a variable delay. If you do use a pot, it will probably take a little trial and error to calibrate it correctly. But, for most of us, an infinite range of possible delays is seldom needed (and, besides, we only had a pot for one of the two timers we

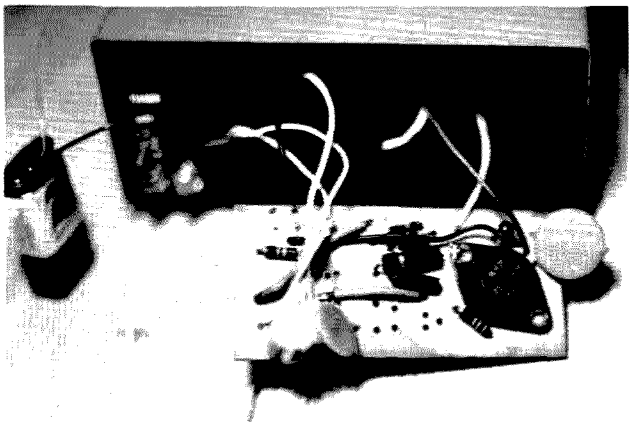

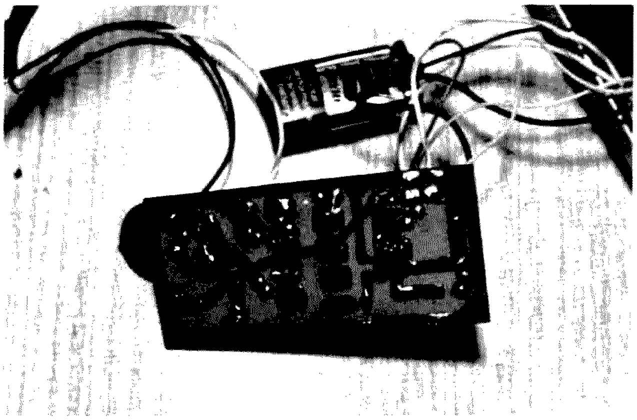

The jumper wire to the oscillator shown in this prototype is not needed in the version shown in the template. This board demonstrates an important caution: If you use a photo process, make sure you don't reverse the mask when exposing the sensitized board. If you do, you'll have to put the IC on the foil side of the board, as we did here.

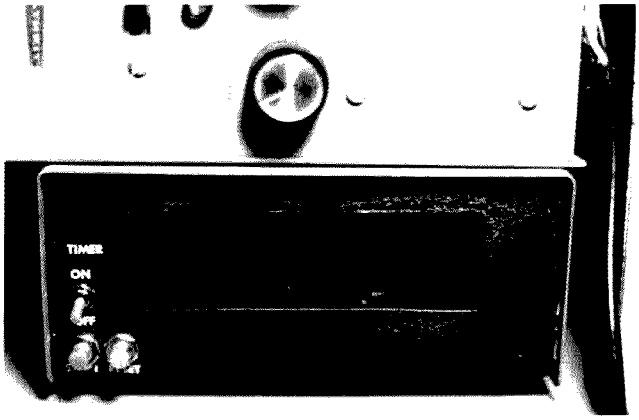

Later on, a clock and a few other useful devices will go into this cabinet, so the timer controls have been clustered on one side. Obviously, simpler packages can be used for your timer.

built). So we included several "pads" to permit fixed value resistors to be switched in and out. By wiring them in series, they can be switched in one at a time, increasing the length of the delay in predetermined increments of, say, five seconds, 30 seconds, one minute, or whatever you choose (or your junk box can handle).

Computing the time delay is simple. Just multiply the value of C1 times the value of the delay resistor (R1). For example, a 100-microfarad capacitor and a 10,000-Ohm resistor give you: .000100f x 10,000 Ohms = 1 second. Make sure you watch those decimals. For those not mathematically inclined, just use the simple graph[1] shown in Fig. 2.

Actually, as the chart demonstrates, the length of the delay is not exactly as the simple R x C formula would imply. There is, of course, some internal capacitance and resistance (and other factors) in both the IC and the associated circuitry which affects the length of the delay. Nevertheless, R x C or the graph will provide good starting points.

The audio oscillator is the simplest part of the timer. Any NPN and any PNP transistor will work, but Q1 should be a power type. A heat sink should not be neces-

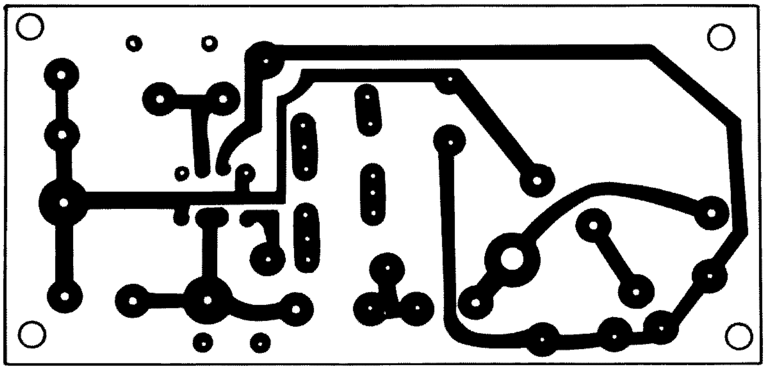

Fig. 3. PC board.

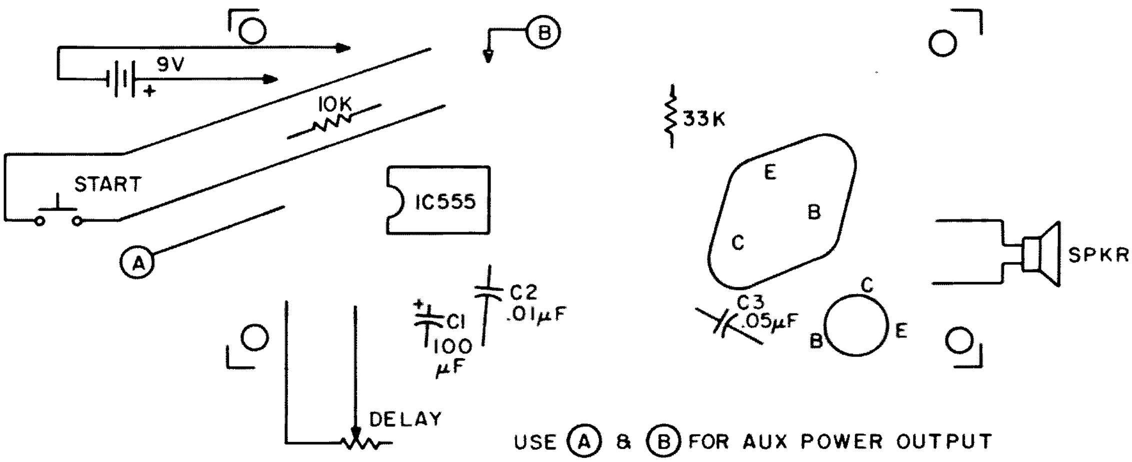

Fig. 4. Component layout (shown from foil side).

sary, and the frequency of the audio note is determined by R3 and C3. The values shown seem to work well, but your junk box should determine which values you use. If you want to fancy it up a little, use a pot for R3, and you can vary the tone to meet your tastes. You can also add a reset function (they can be awfully convenient) by placing a normally-open/momentarily-closed switch across pins 4 and 8. An on/off switch should definitely be included in the battery line, of course, unless you intend to replace batteries every day. In normal use, a 9-volt transistor battery should last several months without replacement. (Both of ours were in operation for more than six months before one finally needed a new battery.)

While we have used only the simplest circuitry here, the possibilities are innumerable. For example, pins 8 and 3 of the IC (A and B on the PC template) will provide a normally "on" output to drive an LED while the device is timing. (Of course, the battery is not going to last as long if you do that.) Pins 1 and 3 provide the normally "off" switch that we use to drive the audio oscillator. (Incidentally, the 555 outputs, when driven by a 9-volt battery, run about 6 volts.) It would be a simple matter to have this first timer light an LED or trigger a relay which lights a sign reading "IDENTIFY." You could have another 555 triggered at the same time as the light to allow you 10 or 15 seconds to hit the reset button before the audio alarm goes off. Or you could have it trigger an audio alarm fifteen seconds before it shuts down your transmitter to keep you from timing out the repeater. The possibilities are limited only by your imagination. ■

Reference

[1] From the Archer Technical Data Sheet for "Timer, RS555."

FCC Math

from page 18

$(\sqrt{R^2 + X^2})^2 = R^2 + X^2$. Squaring is just undoing square rooting! Multiply out that left-hand side to get: $Z^2R^2 + Z^2X^2 = R^2X^2$. Now subtract Z^2X^2 from both sides (doing the opposite of addition Indicated) to get: $Z^2R^2 = R^2X^2 - Z^2X^2$ (subtracting from the right just gets rid of the Z^2X^2 entirely. If you have 7 + 4 = 11, for example, and subtract 4 from both sides, you get 7 = 7. You got rid of the 4 on the left.) Now pull that reverse dealie we've done before, to get: $Z^2R^2 = X^2(R^2 - Z^2)$. Now divide both sides by $(R^2 - Z^2)$ as a unit, getting rid of it on the right and putting it down on the bottom left: $Z^2R^2/(R^2 - Z^2) = X^2$. We're almost there. Just one more opposite, the opposite of squaring, to undo that X^2. So we now take the square root of both sides, recognizing, again, that top left can be handled separately from the bottom, which has to be handled as a unit. That gives $ZR/\sqrt{R^2 - Z^2} = X$, which is what we want, X by itself on one side, everything else on the other. Now, just putting whatever values I have for Z and R, I can find X fairly easily. Say, for example, Z is 5000 Ohms and R is 20,000, we have $X = (5000)(20{,}000)/\sqrt{20{,}000^2 + 5000^2}$, which you can work out rather easily with powers of ten now, can't you?*

*That's $(5 \times 10^3)(2 \times 10^4)/\sqrt{(4 \times 10^8) - (25 \times 10^6)}$ which is $10 \times 10^7/\sqrt{400{,}000{,}000 - 25{,}000{,}000} = 10 \times 10^7/\sqrt{375{,}000{,}000}$. 375,000,000 is about 4×10^8, the square root of which is 2×10^4. Dividing that into the top gives 5×10^3 or 5000 Ohms.

Admittedly, that was one heck of a lot of algebra we just did. The only way one gets a feel for what order to do things in is with lots of practice. The object is always to get one thing by itself on one side with everything else on the other. Making up number equations, with small numbers, is the quick way of finding out what is and what is not going to get us where we want to go. If something doesn't work with numbers, it sure as heck won't work with letters either.

And a final recommendation: Get a license manual, study guide, or whatever and practice, practice, practice wiggling the various formulas Into alternate forms. Check yourself by making up a true number equation for the original and seeing if the same numbers work for the same letters in the final equation you derived. If it doesn't, you've made a mistake somewhere. If it does, you've done correct work. With such practice, you will soon be a totally confident master of electronics math!

WORK AND ANSWERS

Exercise 1:

(1) (a) 59 is 5.9×10^1, about 6×10^1, hence logarithm is 1.8.
(b) 3 is 3×10^0, hence log 3 = 0.5.
(c) 11,100 is 1.11×10^4, about 1×10^4, log is 4.0.
(d) 679,000,000 is about 7×10^8, hence log is 8.85 or so.

(2) (a) 10 log (40/5) is 10 log 8, which is 10 log(8×10^0); log$(8 \times 10^0)$is 0.9. 10 x 0.9 is 9 dB.
(b) 10 log (2/0.03) is 10 log (200/3) or 10 log 67 approximately. 67 is about 7×10^1, whose log is 1.85 or so; 10 times that is 18.5 dB more or less.

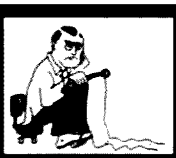

...de W2NSD/1

EDITORIAL BY WAYNE GREEN

from page 6

disaster. That lost us over one million amateurs, hams we would have had if the growth of the hobby had continued through the 60s and 70s as it had in the late 40s and 50s. A lobby certainly could have prevented that disaster.

Then came the repeater rules . . . another almost unbelievable debacle. A good lobby certainly would have headed that massive stupidity off at the pass. Now, again we are deeply in need of a lobby. The FCC is by no means through dumping on us and we have little in the way of any muscle to fight back. The ARRL did its very best to ward off the linear amplifier rules and they lost utterly and completely . . . but then, they have no lobby and thus very little in the way of political clout.

Should we decide that it is worthwhile to fight for amateur radio, the signatures on the petitions will be of enormous help. This is the sort of clout that gets respect from politicians . . . like FCC commissioners.

The FCC has done great harm to amateur radio and apparently has in mind further harm, so it is getting to be time for us to take some more serious measures to protect our hobby.

WHAT WILL 1988 BE LIKE?

Crystal balls are never too clear, but perhaps we can look ahead in amateur radio a bit just by looking back over the last few decades and the changes they have brought.

Some new invention could radically change history, of course, as could the loss of all ham bands at Geneva in 1979, but if we project what information we have right now into the future, we may get a fairly accurate picture of life on the ham bands ten years from now.

In 1968, we could clearly see the future for two meter FM and repeaters, so the current activity on that mode was quite predictable. Indeed, I think you'll find me predicting at least 50,000 active FMers in my 1969 editorials. I missed on that for we now have about 75,000. Compared to the 2,000 active in those days, my projection was reasonable.

There are two significant technological events which will, I think, have a lot to do with amateur radio ten years hence. One is the advent of the microcomputer, which I expect will bring us perhaps 100,000 RTTYers, but with systems beyond present day imagining in use. The other change will be the use of narrowband modulation techniques for both voice and RTTY. We can see, right now, the possibility of 5 kHz repeater splits on the VHF bands using folded audio transmission (FAT) . . . and who knows what even better systems will be evolved in ten years.

If amateur license growth continues as it has for the last year, we can look for almost 1,600,000 hams by 1988. I think we'll make that number. We will have 400,000 this year. By the time we get to 800,000, I sus-

Continued on page 136

Dick Sander K5QY
110 Starlite Drive
Plano TX 75074

Make Antenna Tuning A Joy

—instant swr bridge

Vswr measurement is widely used by radio amateurs for adjusting and matching their antennas. This article shows how I save myself a lot of walking and how I tune my antennas. I started out with a model 190B Tektronix constant amplitude signal generator, which is easy to obtain now on the surplus market. I modified the signal generator slightly, built a 50-Ohm resistance bridge, and merged them to come up with an extremely stable and accurate vswr bridge. If you don't want to modify your generator, you could build only the resistance bridge portion.

The 190B signal generator is perfect for this vswr bridge because of its constant output level, which means that once the incident (forward) voltage is set, you can tune a very large frequency band without needing to readjust every few kilohertz or so. And there are other advantages. The frequency range covers 160 through 10 meters. With my generator-bridge arrangement, everything is complete in one package, so it's handy to use. Because of its low output level, there is no QRM radiated into space.

First you'll need a schematic of the signal generator to study. The following steps describe how to modify the signal generator and install the resistance bridge:

1. Remove the external attenuator pad and its socket from the unit. (Note which pins the wires are on.) Fabricate a 1½-inch-square aluminum plate to mount an SO-239 rf socket, and attach the socket to the unit.

2. Drill a 5/16-inch-diameter hole midway between the power switch and the SO-239 rf connector. Refer to Fig. 1. This hole will be for the vswr function switch. (See schematic for parts list.)

3. Remove V50, a 12AU7 tube used as the meter amplifier, and discard it.

4. Build the 50-Ohm resistance bridge according to the schematic shown in Fig. 2.

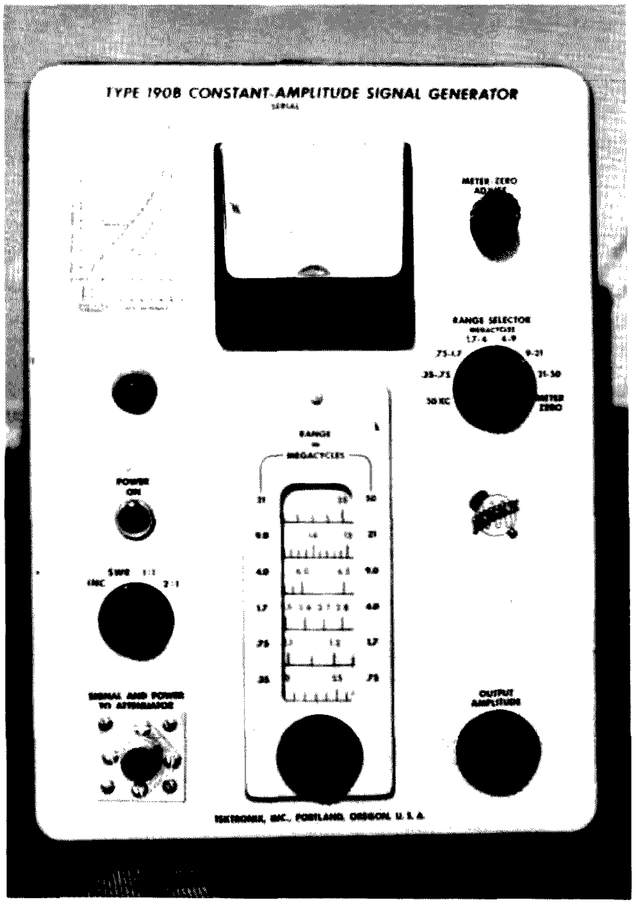

Fig. 1. Completed vswr bridge using modified Tek 190B generator.

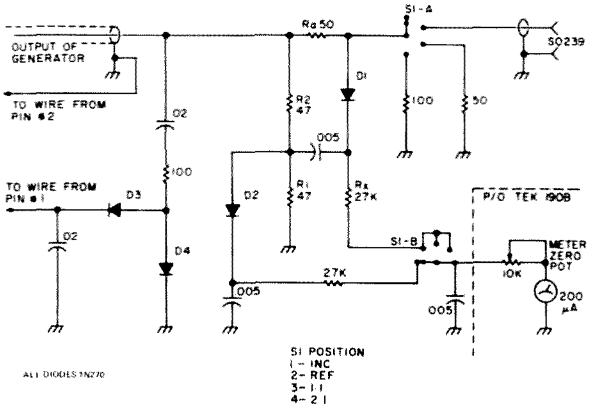

Fig. 2. This is the circuit of the 50-Ohm resistance bridge. R1 should match R2. RX should be trimmed so that incident (fwd) voltage equals reflected voltage. The 1:1 and 2:1 positions of switch S1 are simply 50-Ohm and 100-Ohm resistors to ground. When switched in, these positions give a quick self-check of the unit. D3 and D4 are the feedback diodes for the Tektronix 190B generator. All diodes = 1N270.

Fig. 3. Location of the resistance bridge and switch S1 inside the generator.

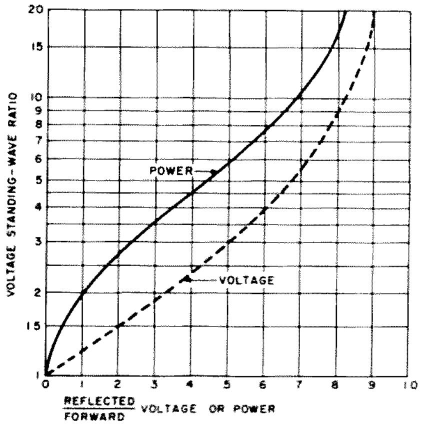

Fig. 4. Chart for finding vswr when ratio of reflected to forward voltage is known.

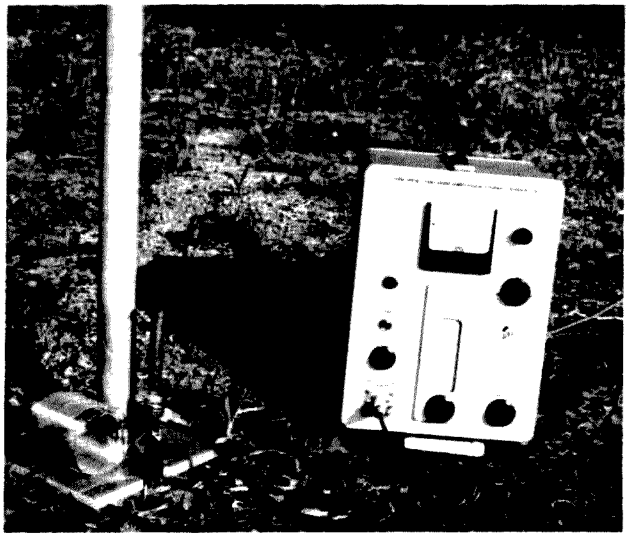

Fig. 5. The vswr bridge is easily carried to the antenna. Shown is the bridge at a vertical antenna using a tapped coil match.

Caution should be used in the wire dress because the frequencies will range up to 50 MHz. The circuit is similar to the bridge described in the *ARRL Antenna Handbook*. Further information may be obtained there if needed.

5. Install the resistance bridge in the 190B signal generator as shown in Fig. 3.

6. Remove the wire from pin 3 of the attenuator socket (blue/white/yellow). It was a heater voltage supply on older units.

7. Ground the wire from pin 2 of the attenuator socket (white/red) at the newly installed SO-239 socket. The coax shield also connects at this point.

8. Connect the wire from pin 1 of the attenuator socket (white/blue) to the resistance bridge in Fig. 2.

9. Replace the 500-Ohm meter-zero pot with a 10,000-Ohm pot. Rewire as shown in Fig. 2.

10. If desired, the existing meter can be replaced (Fig. 1), but it's not necessary. I changed mine because of the scale markings.

11. Install the four-position swr function switch in the 5/16-inch drilled hole, as shown in Fig. 3, and wire to the resistance bridge as shown in the schematic (Fig. 2).

12. A chart for determining vswr is shown in Fig. 4. Copy it or cut it out and tape it to your unit. See Fig. 1. Calibration is simple. After the unit is complete, turn it on. Do not have a load connected to the coax connector. Adjust the incident voltage (INC) for full scale, then switch to the SWR position. The meter should read the same in each position. If it doesn't, trim RX until the meter reads the same. Now, switch to the 1:1 position. The meter should fall to zero, indicating a balanced 50-Ohm load into the bridge. Switch to the 2:1 position. The meter should read approximately 30% of full scale, indicating about 2:1 vswr. If all this happens, box it up.

Now the beauty of this device takes hold! Because the generator's output is constant, when you vary the frequency dial, the meter will track your vswr curve over the entire amateur band you're testing. The first thing you will notice is that somewhere there is a dip, which is the resonant point of the antenna. The amount of dip indicates the impedance (in vswr). This dip will then give the necessary clue for any adjustments.

An example of how it works is shown in Fig. 5. My 160/80 meter vertical uses a

coil to ground and is fed at the center. I started first on 160 meters with a long coil, tapped it at the center, and then fed this tap to the generator-bridge. I adjusted the generator dial until I obtained a dip (which was at 1.7 MHz). I tuned back to 1.815 MHz and started shorting the turns on the long coil until a dip occurred. Next I started moving the tap up and down on the coil until zero indication occurred, and I had 1:1 vswr on 160 meters. I also wanted my vertical to operate on 80 meters, so I set the generator-bridge to 3.8 MHz and repeated the operation. I next installed a bandswitching system. To test it out, I went into the ham shack, turned on the transmitter, and checked both forward and reflected power with my station wattmeter. Needless to say, it turned out to be exactly as the Tektronix 190B generator-bridge indicated.

There are several other possibilities for the generator-bridge. A 500-Ohm pot could be substituted for the 50-Ohm Ra resistor to give the bridge an impedance range of 0-500 Ohms, or a complete LC impedance bridge could be installed for maximum use of the generator-bridge. Old coax can be tested with the generator-bridge by shorting one end of the piece being tested and measuring the vswr. The loss in decibels can then be calculated. If nothing else, the generator-bridge is a very good test rf generator to have in your ham shack. I've adjusted beams with gamma matches, verticals (both trapped and monoband), dipoles, inverted vees, and even mobile antennas using my generator-bridge.

I feel it's the most practical and economical antenna tuning aid I've used in my antenna experimentation and hope that this article will help you with your antenna tuning problems. ■

EDITORIAL BY WAYNE GREEN

from page 130

pect we'll run out of people with enough guts to try and pass the current license exams and we'll have to go to a Communicator license type approach to convince the more lazy to try the hobby.

WHAT ABOUT THE MICROWAVES?

The short distances possible on these frequencies reduces their value for hams. As gear gets easier to build and buy for the 1200 MHz band, we may expand our repeater systems into that band . . . particularly for wideband communications such as TV and some computer-to-computer work. But the permanent loss of all frequencies above 450 MHz for any kind of satellite communications will undoubtedly be the most serious loss in the history of amateur radio.

Satellite communications between any two amateurs in the world would have been possible in the 1980s if we had not lost the frequencies in their entirety at the ITU in 1971. Read the ARRL report in *QST* on this loss, where they admit it was due to poor planning on their part.

COOPER SUED

The State Attorney General's office in California has entered a suit against Rick Cooper for misleading consumers. The suit, filed in Los Angeles, asked that Cooper, doing business through a post office box in Van Nuys as the Communications Attorney Service, be ordered to stop disseminating false information about himself and his service.

According to a newspaper account, among the unproven claims made in ads during 1977 were that he and two partners were licensed to practice law, that he holds a Master's Degree and PhD, and that his company is associated with attorneys in Atlanta, New York, Chicago. The suit also charges that Cooper has exaggerated his claims as to the numbers of subscribers to his service, the size of his staff, and the amount of money someone can save by subscribing to his service.

Cooper seems to have gone underground for the time being, with reports that his phones have been disconnected.

THE PETITION

How does this square up with a need for a petition to be signed by every amateur in the country? There are two major reasons why we should redouble our efforts to get every amateur, and every member of a ham family, and every friend to sign a petition and send it to me.

First, just because Cooper is getting some flack doesn't mean that he is out of the picture by any means.

Second, and far more important, the petition opposes all actions aimed at destroying amateur radio, and the main source of this danger right now is the FCC itself! Amateur radio has just been dealt a whopping disaster by the Commission . . . and another even worse one is well on its way. It is now apparent that there is just no use trying to deal with the FCC on a reasonable and intelligent basis . . . they are a political body and react only to political pressures. Hence the value of the petition.

BRISTOL COMES CLEAN

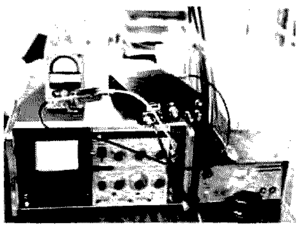

We were *anxious to check* out the new Bristol Ham-100 rig to see what kind of engineering had been done on it. Anyone who has looked at many of the 27 MHz CB rigs on a spectrum analyzer knows how dirty the outputs of many rigs have been. The Ham-100 is a converted (by the factory) CB transceiver. It was first converted and retuned to 10 meters, then a 100 Watt amplifier was added to the back of the set. Considering the mayhem many of the CB rigs are causing when they are fed into an illegal amplifier, the need for a really clean output can be appreciated.

Bristol chief engineer Joe Fox drove up a Ham-100 from Rhode Island and we put it on a spectrum analyzer.

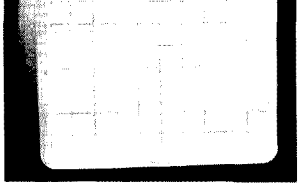

As you can see, the second harmonic output of the Ham-100 is 50 dB below the fundamental. How much is that in Watts? If we figure the rig is putting out around 75 Watts, this would put the second harmonic at about 3/4 of a mW (.00075 Watts).

The third harmonic doesn't show very well due to a lack of sync between my camera and the scope, but I think you can make it out at -60 dB, which is less than a tenth of a milliwatt. The fourth harmonic is easier to see at -55 dB.

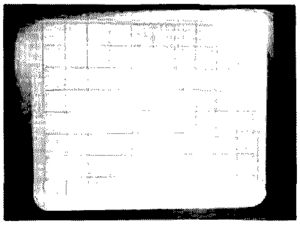

Next, I wanted to check the skirts of the carrier to make sure that the modulation was even and no splatter was present, even at 100% modulation. The photo shows the almost amazing cleanness of the signal. That's with full modulation.

In all, the Ham-100 checked out very clean. I don't think we'll be seeing any TVI from these sets which can be laid to the transmitter. Ten meters is one of the worst bands for TVI, so the cleanness of this rig is important.

10 METERS

Sadly, I find that a group of amateurs in southern California is pushing for a different ten meter channelized standard. This takes me back just a few years to when the two meter groups in that area wanted to ignore the rest of the country. They got furious with me when I came out and spoke to a statewide meeting of repeater groups and told them that channel standardization would have to come . . . even to southern California. The many rugged individualists there fought as long as they could . . . and finally gave in.

Continued on page 188

If You Want To Know Where You Are

—loran-C receiver: part II

R. W. Burhans
Dept. of Electrical Engineering
Ohio University
Athens OH 45701

The general principles of loran-C were described in Part I of this article (*73*, April, 1978). In this section, I will present a minimal hardware system for amateur time-frequency and simple navigation experiments. The Mini-L 100 kHz front end uses an envelope processing rf method for direct generation of an estimate of the shape of each original pulse as transmitted. The technique is called "autocorrelation" because the timing edge information obtained is all based on the received signal and is not "cross-correlated" with a local oscillator source. Of course, an external clock is used ultimately to make time-interval estimates with computers or digital hardware, but this is after the fact of initial pulse envelope detection. Many commercial loran-C receivers use cross-correlation methods where the signal is continuously sampled with respect to the local clock at the rf carrier level and the clock sample phase maintained "in-lock" with the loran-C signal through a set of multiplexed phase locked loops. The autocorrelation method used in Mini-L is not the best available for loran-C, but it is probably one of the simplest and can provide 1-microsecond timing precision up to 600 miles with proper care in operation.

Antenna Preamplifier

A JFET preamplifier provides impedance transformation from an E-field whip or wire antenna to a 600-Ohm line level sufficient to drive a short length of coaxial cable to the receiver. A circuit is shown in Fig. 1(a). There is a slight phase shift due to the cable, but this can be ignored in most cases, since it is a constant. Power for the preamp comes up the same coax cable. In some installations, cable ground loops and common code 60 Hz noise may be a problem. A modification of the preamp output to drive a balanced shielded transmission line is shown in Fig. 2. This requires an additional transformer at the receiver end to extract the signal. The output transformer tap may be grounded and used to drive two separate receivers, such as a loran-C and a VLF receiver, as shown in Fig. 2.

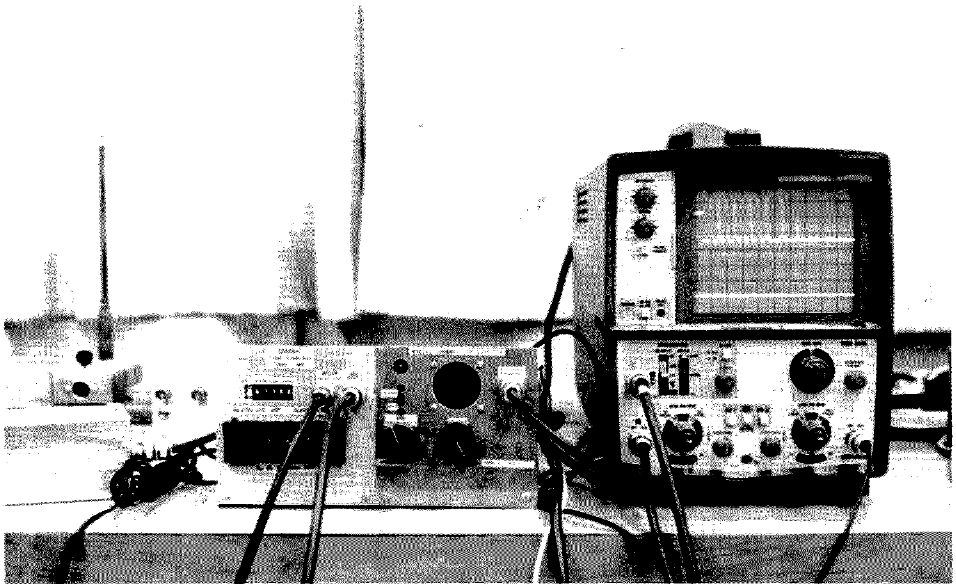

Experimental Mini-L with GRI rate generator and scope trace locked to master station at Cape Fear NC (east coast 99,300 GRI). The shorter pulse to the right of the ninth pulse is an interference noise pulse. The lower trace, hardly visible, is the IRQ 10 μs output. This also shows interference.

The use of a 600-Ohm line audio transformer as an output coupling device provides a low-pass filter for loran-C and VLF signals. This is an advantage, since it tends to reduce cross-modulation and noise effects in the main receiver caused by broadcast band, LF beacons, or short wave transmitters. A Mouser 80TM011 600 c-t to 1.5k c-t transformer provides a step up when used as the output transformer at the receiver end with the 600-Ohm side connected to the balanced transmission line. The particular transformer used will pass frequencies to about 300 kHz, but the upper cutoff may be changed by the capacitor (C), as illustrated, to restrict the range for different loran-C or omega VLF uses. Fig. 1(c) shows diode static charge limiters. This was an experimental model where the diode limiters caused cross-modulation from local transmitters. It is suggested that the diodes not be used. Another method is to use series, opposed polarity, zener diodes which can be mounted by cutting away part of the original diode foil pattern of Fig. 1(b).

Antennas can be anything from a 1 meter vertical whip to a wire of 10 meters or more, with best performance obtained when the antenna is mounted in the clear. A vertical antenna is best, but quite satisfactory performance is obtained from one run at a slant, such as from an insulated pole on a rooftop down to a window feed-through insulator at the preamp. Precipitation static is a problem in aircraft installations. Semiconducting coatings on the wire help reduce this, and often a coated blade-type capacitive antenna is used, mounted on the bottom of the aircraft near the tail. Dry, blowing snow and some rainstorms also produce precipitation static in ground installations, which can be recognized with an audio monitor as a slow buildup of a buzzing sound with sharp crackle noises sweeping through the audio spectrum at different repetition rates.

Rf Processor

The heart of the Mini-L circuit is a Fairchild uA721PC, AM/FM receiver subsystem IC. This chip contains four functional blocks and a bias regulator. Fig. 3 is a circuit diagram of the rf front end. A pair of T-notch traps help eliminate interference at 88 kHz and 122 kHz for the east coast chain, or they may be tuned to 60 kHz and 119 kHz for interference rejection on the west coast chain. I-f transformers are all standard 20k to 5k, 455 kHz diode output types (Mouser Electronics type 801F103HK – black slug – is suggested). They are tuned with a .0033 mF polystyrene capacitor to bring the range down to 100 kHz for T1, T4, and T5. T2 and T3 are input traps on either side of the loran carrier frequency. The 100 kHz transformers are rather broadband in this circuit because of the loading of the full winding, not using the tap, across the low-impedance circuits on the uA721 chip. Alignment is achieved with a stable CW source, such as a function generator with pin 13 of the uA721 or the test point from transformer T4 secondary as an output monitor with a scope. Peak T1 at 100 kHz, null T2 at 88 kHz (or 60 kHz), null T3 at 122 kHz (or 119 kHz), peak T4 at 98 kHz, and peak T5 at 100 kHz with the generator coupled to the input terminal through a capacitor and suitable attenuator. Use a relatively low rf gain and low agc threshold setting for initial alignment. The 3 dB bandwidth will generally be in the range of 18 kHz to 23 kHz.

The Q-notch resistors should be adjusted for the best null, going back and forth between tuning the null of T2 and T3 and the respective Q resistors. A deeper null may be obtained for T2 by a slight adjustment of the Q-multiplier trimpot associated with this trap only. The traps may be user adjusted for other interference, depending on the location. For example, in Europe, interference in the 90 kHz range is sometimes severe. Particularly, the low-side trap should be tuned for the highest Q with the Q-multiplier tweaking adjustment for minimal disturbance of the desired 20 kHz system bandwidth. If you do not have interference problems, tune the traps to 80 kHz and 120 kHz. For narrowband DX reception, the tuning may be altered as described later.

Transformer T5 is particularly critical in the circuit of Fig. 3. This drives the autocorrelation detector, which provides a marked improvement in the detection of pulse envelopes when compared to conventional diode AM detectors. It turns

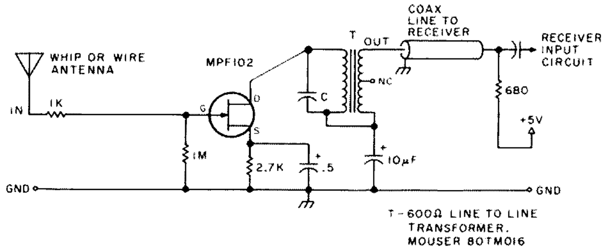

Fig. 1(a). VLF preamplifier circuit.

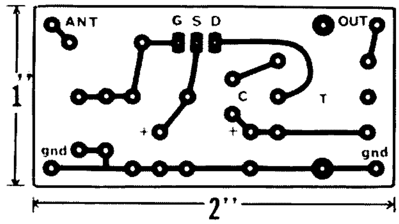

Fig. 1(b). Mini-O, Mini-L preamp PC board.

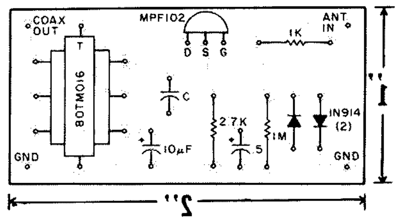

INPUT IMPEDANCE	1 MEGOHM
OUTPUT IMPEDANCE	600 OHMS
GAIN	+1 TO +3dB
BANDWIDTH	3 TO 300KHz, NO C 3 TO 130KHz, C=500pF 3 TO 30KHz, C=5000pF

Fig. 1(c). Mini-O, Mini-L preamp component placement diagram.

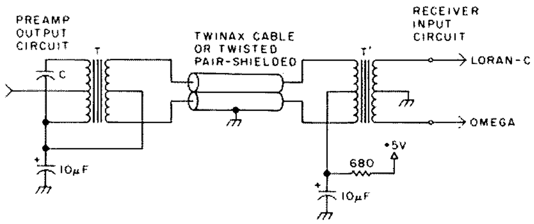

Fig. 2. Common mode ground loop noise reduction method. T – Mouser 80TM016, 600-Ohm c-t line-to-line output transformer.

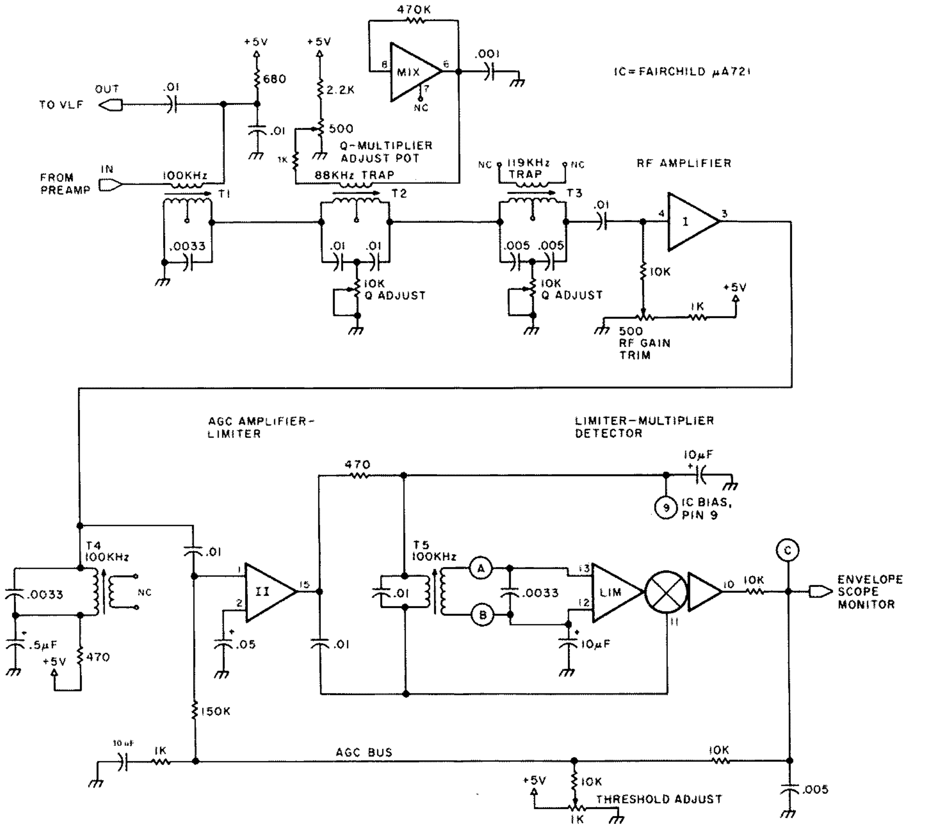

Fig. 3. Mini-L loran-C rf circuit. T1, T4, T5 – 801F103; T2 – 801F103; T3 – 801F103 or 801F100 (Mouser Electronics Co. miniature 3/8" sq. 455 kHz i-f transformers, slug tuned).

out that manufacturers of the 455 kHz i-f cans used do not necessarily control the "polarity" of the primary with respect to secondary windings. For conventional AM receiver use, this is of little consequence. However, for the autocorrelator, reversal of the phase of transformer T5 has the effect of reversing the direction of the output pulse from the envelope detector. If you observe a negative-going envelope, the jumper connections on the PC board at the 2-pin side of T5 connected across the .01 cap should be reversed by carefully cutting away the one foil jumper and using the extra holes provided on the PC board for this crossover change. Mouser has assured us that the 801F103HK version will have the same polarity, but we ran into about four different manufacturers of this style of transformer with no specification on the winding polarity. Thus the board has been redesigned so that Mini-L builders can accommodate different polarity transformers.

Amplifier II of the 721 is operated in an unusual manner in which the gain is changed with a positive-going signal as opposed to a more normal negative-going agc voltage derived from conventional detectors. This is operated in the saturation region with the output transformer T5 preserving the shape of the loran-C signal. The sensitivity of this mode of agc control is a remarkable 100 dB/volt! An agc threshold control, usually mounted on the receiver front panel, provides a means for adjusting the receiver sensitivity in conjunction with the board-mounted rf gain trimpot. This agc bus is intended for operation with a 5 V power supply provided with the 7805 regulator mounted on the Mini-L board. However, the uA721 chip is capable of operating over a wider range of power supply voltages. We would not recommend changing this unless you wish to become involved with changing almost all the bias and series resistors in the whole system.

Agc Experiments

In the course of developing the Mini-L receiver, a number of different operational modes have been discovered for this autocorrelation detector. Single-pulse agc can be achieved by making the agc time constant much smaller. Change the 10 mF capacitor in series with the 1k damping resistor to a much lower value of .01 mF. This makes the hard-limiting effect much greater on all the signals, but tends to degrade the receiver performance as the noise level is increased. Another mode of operation is reverse agc, or expander-type operation, where the agc voltage developed increases the gain. This has the effect of spreading the amplitudes of the signals even farther apart, instead of trying to limit them all to the same range of amplitudes. For DX reception on weak signals with no strong signals present, this might be a viable mode of operation in some parts of the world. Reverse agc may be achieved by reversing the polarity of the envelope or by operating with the agc control tuned up from the ground end of the pot. The difficulty here is, of course, that reverse agc also tends to amplify the noise even more, but there may be some advantage when using narrowband i-f strips for weak signal detection. In general, we would not recommend these operations for time-interval measurements on the normal ground wave.

DX Reception

Loran sky wave signals with multiple hop paths may be detected for several thousand miles by devising envelope detector methods which depend on detecting the peak of the signal instead of the 3rd-cycle inflection point. It is also necessary to drastically reduce the system bandwidth and sacrifice the timing precision to something like ± 100 μs, instead of ± 1 μs. The bandwidth of Mini-L may be reduced by carefully peaking all transformers at exactly 100 kHz, using the tap on the tuned side of transformers T1, T4, and T5 as the driven point to increase the Q, with the .0033 cap still across the whole winding, and changing the output from T4 to the test point instead of directly at the top of the tuned circuit. Narrower bandwidths down to 5 kHz or so may be achieved by the experimenter interested in DX reception. If all these changes are made, including the reverse agc, then signals from all over the world start to appear on the envelope trace. It becomes difficult to sort out the confusion as viewed on an oscilloscope connected to the agc bus monitor point. Still, with the

aid of a good external clock and GRI rate generator, it is possible to pick out individual loran-C stations at long range. We regularly receive Newfoundland in Ohio by careful tweaking this way and could even use it to check our local frequency standards where the desired measurement precision is within a millisecond or so per day.

The T-notch traps may also be used to alter the bandwidth by setting the traps at something like 95 kHz and 105 kHz, which has the effect of producing a sharper center frequency peak of only 3 kHz bandwidth or so at 100 kHz. The side skirts may be further reduced by placing a tuned circuit between the preamplifier and the main Mini-L board with appropriate isolation of the dc supply to the preamplifier on the primary side of the additional tuned transformer. All of these experiments tend to reduce the precision of loran-C but are of interest for those who wish to use loran-C only for checking local clocks and frequency standards.

Some of the more complex military loran-C receiver systems have two front ends. One is a very narrow band loop for tracking the peaks of the signals and identifying the main GRI. The other is a wider band tracking loop for measurement of the time intervals. A third system is also found in some commercial receivers in the form of an extra channel or tuned rf voltmeter to help identify interference and to aid in adjusting traps connected to the wide band channel.

Envelope Deriver

In the first versions of Mini-L, a number of different comparator circuits were tried in an attempt to generate a pulse edge at the 50% point or 3rd cycle of the rising pulse envelope. The best compromise at this time appears to be a derivative-adder circuit operated from point C of the agc bus monitor point shown in Fig. 4. This circuit has a fairly wide 10:1 dynamic range and is intended to detect the inflection point of the original input signal. It combines a differentiator; adder with gain; automatic bias control of the dc, signal, and noise level with an integrator; and, finally, a stabilized gain block using a comparator as a high-speed operational amplifier. The inflection point is degraded in the front end due to the limited rf bandwidth and is often difficult to observe at low rf gain because amplifier II may cut off the signal as it goes down into the noise. Thus the agc level control should be set for a maximum swing of the pulse envelope. Also, the rf gain should be adjusted so that almost all the signals desired are full limiting and the noise level shows appreciably on the baseline. The agc control operates best when low gain is the +5 V end of the pot, increasing gain to a peak at about midway between +V and ground at the CW end. Under these conditions, the derivative-adder circuit will be firing on what it estimates is the inflection point of the input, which may appear as if it is too late but will usually be correct at nearly the 3rd cycle. To further insure that a good estimate of the proper starting point is made, a one-and-only-one synchronizer triggers on the nearest 100 kHz zero crossing after this

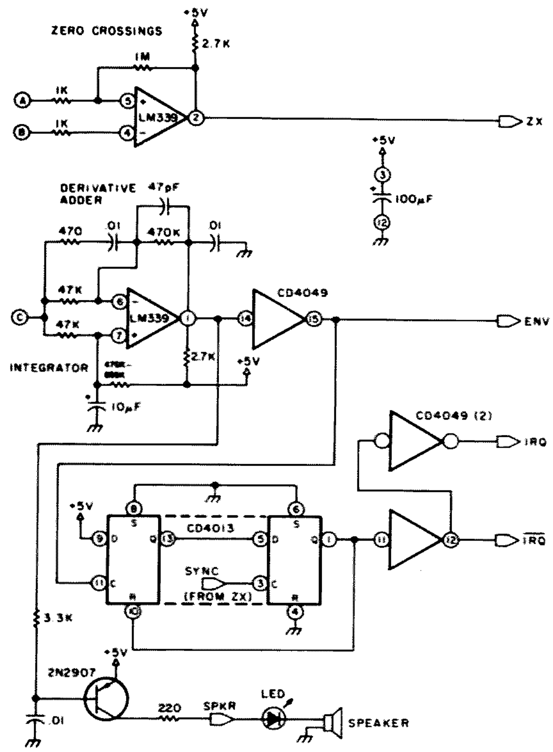

Fig. 4. Mini-L envelope deriver.

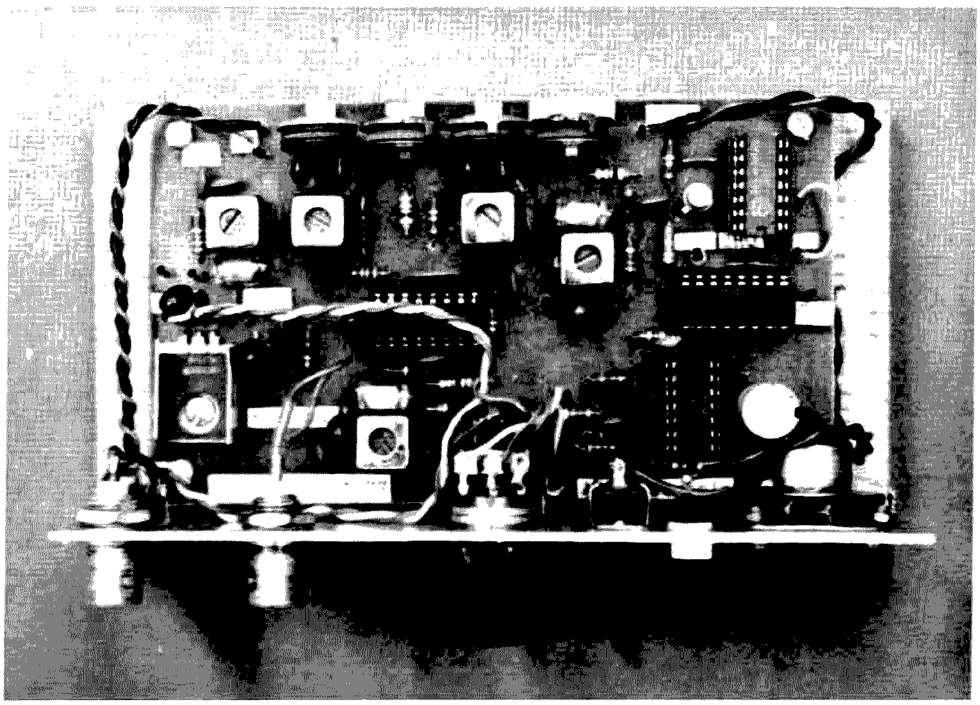

Assembled prototype Mini-L circuit board with agc control, LED and monitor speaker (top view), BNC fittings for input from the preamp, and the output envelope monitor point.

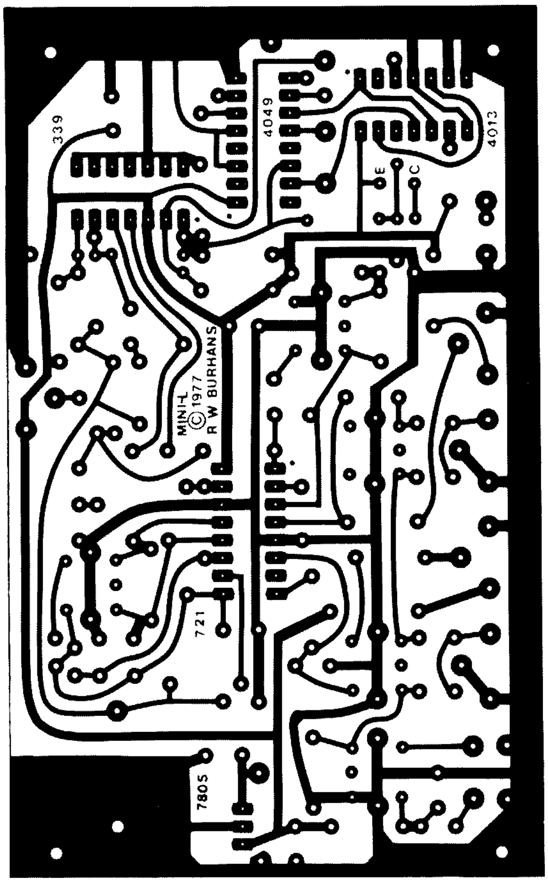

Fig. 5. Mini-L PC board.

envelope comparator triggers on. A jumper on the circuit board is used to connect the ZX output to the sync input, but this can be changed so that the user could apply more sophisticated external sampling to the output of the derivative-adder. The time constants of the envelope deriver circuit could also be changed if anyone feels a need to do this. The net result here is a single 10 μs $\overline{\text{IRQ}}$ or IRQ pulse (interrupt request to external timing software or hardware) for each loran envelope detected. These pulses become the basic digital output for time-interval measurements. Of course, these output pulses are contaminated with noise, and it is up to the user digital or software processing to figure out where the true loran-C data is by external cross-correlation and averaging techniques.

Monitors

The envelope deriver output also drives a loudspeaker and LED connected in series external to the Mini-L board. This indicating method is handy for setting the rf gain and agc threshold in the absence of an oscilloscope. A good full sound of many loran-C signals buzzing away and an almost steady glow of the LED usually provide a proper operating point. This should be checked with a scope connected to point C to determine the proper combination of sight and sound when all usable signals are limiting across the scope trace. For initial search and acquisition of the desired chain, the agc threshold control may be turned down so that only one predominant signal is triggering the LED and speaker. This will usually be the nearest loran-C station to the observer. Then, having identified this one station, the observer can increase the threshold to start observing the other signals and, with the aid of an external GRI rate timer, estimate about where each of the other stations should be on a scope trace.

Circuit Boards

Illustrations of the foil pattern and parts placement for the Mini-L board are shown in Figs. 5 and 6. Care should be exercised in handling the i-f transformers. The cup core ferrite material is fragile and can break away from the can if excess force is used to turn the core. When mounted in place and soldered at the ground tabs, these transformers are quite rugged. They are found in transistor AM radios by the millions.

The general key to successful assembly of Mini-L is tender loving care with all the components and use of a fine set of hand tools with a low-wattage soldering iron. The board should be polished clean prior to soldering, with 0000 steel wool or a scouring cleanser, washed with clean water or alcohol, and dried. It is also a good idea to inspect the board for slight foil defects or burrs on holes and to carefully clean these up before wiring.

Frequency Standard Calibration

Hardware for checking frequency standards or clocks operating at multiples of 1 MHz can be reasonably simple. Fig. 7 is an example of a GRI rate timer to be used as the sync source for a triggered sweep oscilloscope display. A 10 kHz signal obtained by dividing a local 1 MHz standard by 100 is used as the input to a BCD programmable divider chain. Any GRI rate may be set on the thumbwheel switches, or the divider could be hardwired for a particular rate in a given area.

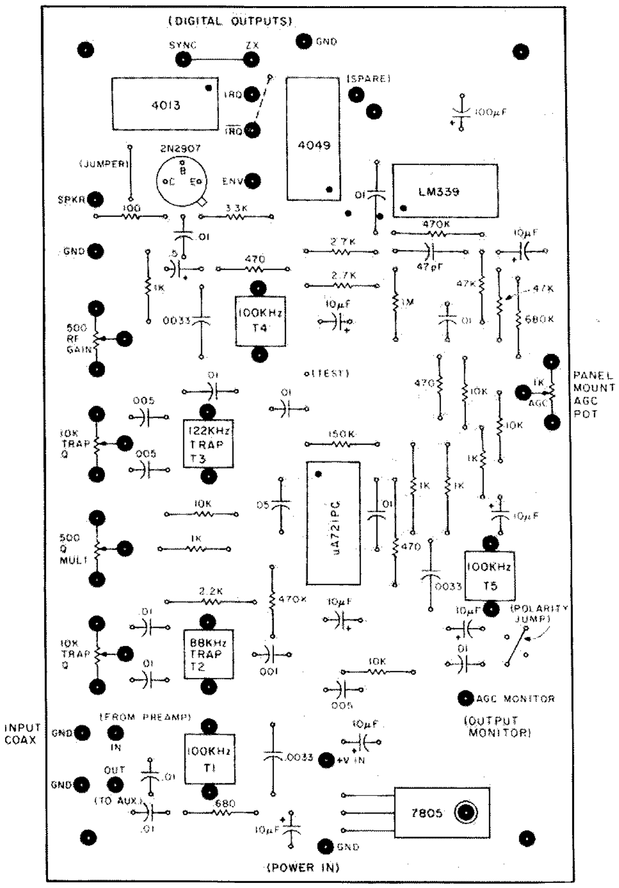

Fig. 6. Mini-L board component placement.

The envelope signal from Mini-L point C is the vertical input to the scope, and the output pulse from Fig. 7 is used to synchronize the scope sweep at the desired GRI rate. The loran-C pulses for the selected rate should be standing still, if you have a good 1 MHz clock, except for cross-chain interference from distant stations or loran-D. The circuit may be used to determine clock offset errors and long-term aging by observing the time it takes for the stable loran-C chain to drift a given amount to the right or left of wherever you started observing a particular station signal. $\Delta t/t$, or the local clock offset, can be estimated directly here. For a precision standard in the range of offsets like 1×10^{-9}, a daily check on the position of a particular station pulse signal expanded on the scope trace, with the GRI rate source kept operating continuously, plotted over a few weeks, gives the clock aging rate estimate.

By selecting additional outputs, without feedback from the same counter chain, it is possible to generate identifying pulses with known TDs and to place these on a second trace of a dual-channel scope. Then, by momentarily speeding up the clock by flicking the GRI rate BCD switches 100 μs slower or faster, you can position these pulses with respect to any of the signals and estimate the time differences.

A crude loran-A mode time-interval counter has been fabricated experimentally based on a time circuit starting with Fig. 7. The loran-C master station is first positioned with a scope trace at the left edge with the first pulse just visible. The GRI rate pulse triggers the scope sweep and also turns on a flip-flop when the next IRQ arrives from Mini-L. The second set of BCD switches from the same counter chain is positioned so the pulse is just before the desired slave. Then the next IRQ from Mini-L for the slave pulse time estimate turns off the flip-flop. The on-off time of the flip-flop becomes the time interval, first master IRQ to first slave IRQ. A CMOS 7208 counter chip connected as a time-interval meter or period counter at 1 MHz then can be made to be direct reading in microseconds for this pulse-to-pulse time interval. Single measurements, even repeating at 10 times per second (about this for 99,300 GRI), give erratic readings when the noise level is high, but they do illustrate the idea of loran-C. The U.S. Coast Guard does not recommend using loran-A methods for loran-C, but they can be quite educational in the first stages of trying to understand the system. Some existing loran-C receivers use variations of this method by suitably gating all 8 of the detected pulses with respect to all 8 of the desired slave time intervals and averaging over at least two GRI periods to arrive at a time-interval number. The digital hardware rapidly becomes a complex mess, particularly when you are not allowed to use an oscilloscope for initial positioning and identification of stations.

A quite complex all-TTL down-counter version of a timer which locks to a single station of a loran-C chain, including the phase code, has been reported by Kramer (G. Kramer, "Loran-C Timing Receivers," *Frequency Technology*, Vol. 8, #8-9, pp. 13-17, August-September, 1970). His circuit is primarily intended as a time-frequency standard reference, but it might be expanded to include some time-interval measurements.

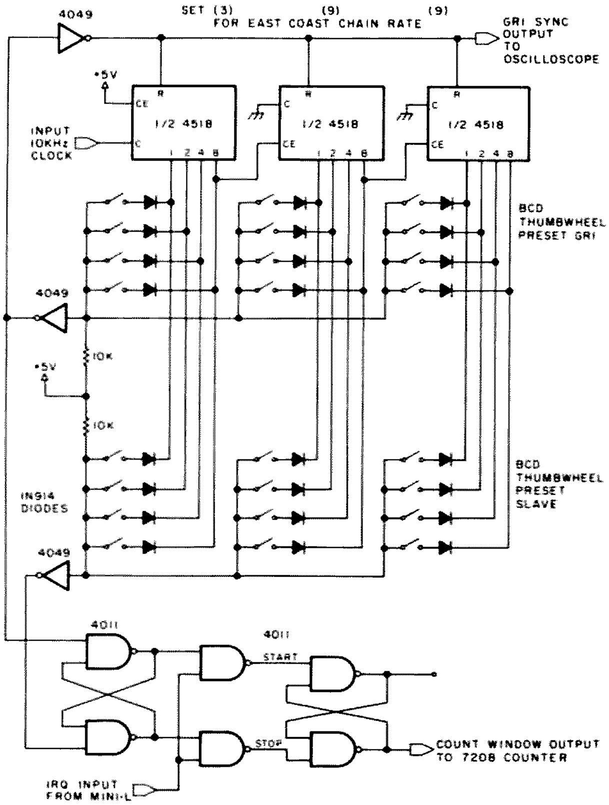

Fig. 7. GRI rate generator with slave window timer.

KIM GRI Timer

For those who have a KIM-1 microcomputer, a 22-instruction timer routine is usually simpler than fabricating a digital hardware GRI source. The program uses the interval timer on the 6530 PIA chip with a BIT test and BPL compare instruction, after first setting the required time delay numbers for 1024, 64, 8, or 1 clock cycles. An additional trim delay with an NOP instruction allows setting the total timeout to the desired GRI interval. The 1 MHz clock on board KIM should be set within ± 10 Hz with a trimmer capacitor, if possible. (See KIM/6502 *User Notes*, #5, page 10, May, 1977, for KIM clock modifications if your clock frequency is not close to 1 MHz.) This program generates a 99,300-microsecond interval for the east coast chain with a short 5 μs pulse output. Other GRI

```
John Burhans timer
EXECUTION BEGINS...

END PASS 1:    0 ERRORS

                      *
                      *
                      *      THIS ROUTINE IS A TIMER ROUTINE FOR THE KIM 1
                      *      MICROPROCESSOR. IT WILL GENERATE A TIME INTERVAL
                      *      OF 99300US TO BE USED AS A GRI RATE FOR THE
                      *      EAST COAST LORAN CHAIN.
                      *
                      *
     1780                    ORG $1780
     1780             DDIR   EQU $1701
     1780             OUTPUT EQU $1700
     1780             T1024  EQU $1707
     1780             T64    EQU $1706
     1780             T8     EQU $1705
     1780             T1     EQU $1704
     1780             TIME1  EQU $60
     1780             TIME2  EQU $0E
     1780             TIME3  EQU $34
     1780 D8                 CLD                  CLEAR DECIMAL
     1781 18                 CLC                  CLEAR CARRY
     1782 A9 01              LDA #$01
     1784 8D 01 17           STA DDIR             1701 DDIR SET PA0 AS OUTPUT
     1787 A9 01       START  LDA #$01
     1789 8D 00 17           STA OUTPUT           TURN PA0 ON
     178C A9 00              LDA #$00
     178E 8D 00 17           STA OUTPUT           TURN PA0 OFF
     1791 A9 60              LDA #TIME1
     1793 8D 07 17           STA T1024            DELAY TIME 1024
     1796 2C 04 17    DELAY1 BIT T1               COMPARE BIT 7
     1799 10 FB              BPL DELAY1           WHEN N=0
     179B A9 0E              LDA #TIME2
     179D 8D 06 17           STA T64              DELAY TIME 64
     17A0 2C 04 17    DELAY2 BIT T1               COMPARE BIT 7
     17A3 10 FB              BPL DELAY2           DELAY2 WHEN N=0
     17A5 A9 34              LDA #TIME3
     17A7 8D 04 17           STA T1               DELAY TIME 1T
     17AA 2C 04 17    DELAY3 BIT T1               COMPARE BIT 7
     17AD 10 FB              BPL DELAY3           DELAY 3 WHEN N=0
     17AF EA          DELAY4 NOP                  DELAY TRIM TO 1US
     17B0 4C 87 17           JMP START
                             END

END PASS 2:    0 ERRORS
```

Table 1.

```
 Jasm nick kimsync a
EXECUTION BEGINS...

 END PASS 1:    0 ERRORS

                    *
                    *
                    *      THIS PROGRAM WAS DESIGNED TO FIND LORAN MASTER STATIONS
                    *      USING A REAL TIME INTERUPT GENERATED BY THE MINI I
                    *      HARDWARE FRONT END.  THE CRITERIA FOR THE TEST ARE:
                    *      A SERIES OF 8 PULSES SPACED 1MS FOLLOWED BY ONE PULSE
                    *      AT 2MS.  AT THIS TIME A POSITIVE GOING PULSE WILL
                    *      APPEAR ON THE KIM PIA PA1 OUTPUT PORT PIN. AFTER FINDING
                    *      A MASTER STATION THE SOFTWARE WILL BEGIN AGAIN TO FIND
                    *      ANOTHER MASTER STATION MEETING THE CRITERIA.
                    *      ALSO AT THE LAST PULSE OF THE 8 PULSE GROUP AN OUTPUT
                    *      PULSE WILL APPEAR ON THE KIM PIA PA0 OUTPUT PORT.
                    *
                    *
 0000                       ORG 0000
 0000               VIRQ    EQU $17FE
 0000               X8TIME  EQU $170D
 0000               GRISET  EQU $170F
 0000               OUTPUT  EQU $1700
 0000               DDIR    EQU $1701
 0000               STOP    EQU $1C00
 0000               TOFF    EQU $1706
 0000 2E            XIRQ    ADR LIRQ
 0001 00            SFLAGS  BSS 1
 0002 00            EVCTR   BSS 1
                    *
                    *
                    *      THIS IS THE START POINT FOR THE ROUTINE.  WE INITIALIZE THE
                    *      IRQ VECTORS AND SET UP THE SOFTWARE FLAGS AND COUNTERS.
                    *
                    *
 0003 78            VSET    SEI                     DISABLE  IRQ
 0004 A9 00                 LDA =$00
 0006 8D FF 17              STA VIRQ+1              STORE IRQ VECTOR
 0009 A5 00                 LDA XIRQ
 000B 8D FE 17              STA VIRQ                STORE LSD OF IRQ VECTOR
 000E A9 0B         OUTSET  LDA =$0B
 0010 8D 01 17              STA DDIR
 0013 4C 19 00              JMP BEGIN
 0016 68            AGAIN   PLA                     FAKING AN RTI
 0017 68                    PLA
 0018 68                    PLA
 0019 78            BEGIN   SEI                     DISABLE INTERUPT
 001A A9 01                 LDA =$01
 001C 85 01                 STA SFLAGS              SET MASTER FIND FLAG
 001E A9 08                 LDA =$08
 0020 8D 00 17              STA OUTPUT              CLEAR INTERUPT LATCH + MASTER PULSE
 0023 A9 00                 LDA =$00
 0025 85 02                 STA EVCTR               CLEAR ENVELOPE COUNTER
 0027 58                    CLI                     UNBLANK IRQ
 0028 8D 00 17              STA OUTPUT              ENABLE INTERUPT LATCH
 002B 4C 2B 00      SELF    JMP SELF                WAIT
                    *
                    *
                    *      THIS IS THE BEGINNING OF THE INTERUPT SERVICE SEQUENCE
                    *      THIS IS WHERE THE TEST FOR THE LORAN VS TIMER INTERUPTS
                    *      IS DETERMINED.
                    *
                    *
 002E A9 04         LIRQ    LDA =$04
 0030 2D 00 17              AND OUTPUT              CHECK FOR TIMEOUT INTERUPT
 0033 F0 4C                 BEQ TIRQ                TIMER INTERUPT
 0035 A9 80                 LDA =$80                LORAN INTERUPT SERVICE STARTS HERE
 0037 25 01                 AND SFLAGS              CHECK FOR TIME OUT SET
 0039 F0 09                 BEQ CONT                NO
 003B AD 06 17              LDA TOFF                DISABLE TIME OUT INTERUPT
 003E A9 7F                 LDA =$7F
 0040 25 01                 AND SFLAGS
 0042 85 01                 STA SFLAGS              CLEAR TIME OUT
                    *
                    *
                    *      THIS IS WHERE THE ENVELOPES ARE COUNTED AND THE STATUS
                    *      FLAGS (SFLAGS) ARE CHANGED AND TESTED TO DETERMINE THE
                    *      FLOW OF THE PROGRAM.
                    *
                    *
 0044 A9 01         CONT    LDA =$01
 0046 25 01                 AND SFLAGS              TEST FOR MASTER SEARCH SET
 0048 F0 28                 BEQ N1                  NOT SET
 004A E6 02                 INC EVCTR               YES SET
 004C A9 08                 LDA =$08
 004E C5 02                 CMP EVCTR               LOOKING FOR 8TH PULSE
 0050 F0 08                 BEQ PNINE               YES
 0052 A9 6A                 LDA =$6A                NO
 0054 8D 0D 17              STA X8TIME              SET TIME OUT FOR 1MS
 0057 4C AC 00              JMP RTN                 CLEAR INTERUPT LATCH
 005A A9 01         PNINE   LDA =$01
 005C 8D 00 17              STA OUTPUT              PULSE PIA PA0 HIGH
 005F A9 00                 LDA =$00
 0061 8D 00 17              STA OUTPUT              PULSE PIA PA0 LOW
 0064 A9 03                 LDA =$03
 0066 45 01                 EOR SFLAGS              CLEAR MASTER SEARCH SET MASTER FOUND
 0068 85 01                 STA SFLAGS
 006A A9 E7                 LDA =$E7
 006C 8D 0D 17              STA X8TIME              SET TIME FOR 2MS
 006F 4C AC 00              JMP RTN                 CLEAR INTERUPT LATCH
 0072 A9 02         N1      LDA =$02
 0074 25 01                 AND SFLAGS              CHECK FOR MASTER FOUND
 0076 F0 06                 BEQ N2                  NO (ERRORS)
 0078 8D 00 17              STA OUTPUT              YES OUTPUT MASTER FOUND PULSE
 007B 4C 16 00              JMP AGAIN               CONTINUE TO LOOK AGAIN
 007E 4C 00 1C      N2      JMP STOP                ERROR
                    *
                    *
                    *      THIS IS WHERE THE TIMER INTERUPT SERVICE STARTS. WE ENTER
                    *      HERE FROM THR LIRQ ROUTINE ABOVE.  THIS ROUTINE TAKES
                    *      CARE OF ALL INTERUPTS GENERATED BY THE TIMER ON KIM.
                    *
                    *
 0081 A9 08         TIRQ    LDA =$08
 0083 8D 00 17              STA OUTPUT              DISABLE LORAN IRQ
 0086 A9 80                 LDA =$80
 0088 25 01                 AND SFLAGS              CHECK FOR TIME OUT
 008A D0 0E                 BNE SET                 SET
 008C A9 80                 LDA =$80                TIME OUT NOT SET ROUTINE STARTS HERE
 008E 05 01                 ORA SFLAGS
 0090 85 01                 STA SFLAGS              SET TIME OUT FLAG
 0092 A9 08                 LDA =$08
 0094 8D 0B 17              STA X8TIME              START TIME OUT
 0097 4C A1 00              JMP CLEAR               CLEAR INTERUPT LATCH
 009A 78            SET     SEI                     NO  ENVELOPE FOUND
 009B 8D 06 17              STA TOFF                DISABLE TIMEOUT INTERUPT
 009E 4C 16 00              JMP AGAIN
 00A1 A9 08         CLEAR   LDA =$08
 00A3 8D 00 17              STA OUTPUT              CLEAR INTERUPT LATCH
 00A6 A9 00                 LDA =00
 00A8 8D 00 17              STA OUTPUT              ENABLE INTERUPT LATCH
 00AB 40                    RTI
 00AC A9 08         RTN     LDA =$08
 00AE 8D 00 17              STA OUTPUT              DISABLE INTERUPT LATCH
 00B1 40                    RTI
                            END

 END PASS 2:    0 ERRORS

R:
```

Table 2.

rates could be programmed by changing the delay constants and trim NOP. The output of the timer on port PA0 is used to synchronize the oscilloscope sweep while observing the Mini-L envelope signals on the Y-input. This display inherently checks the KIM 1 MHz clock versus the

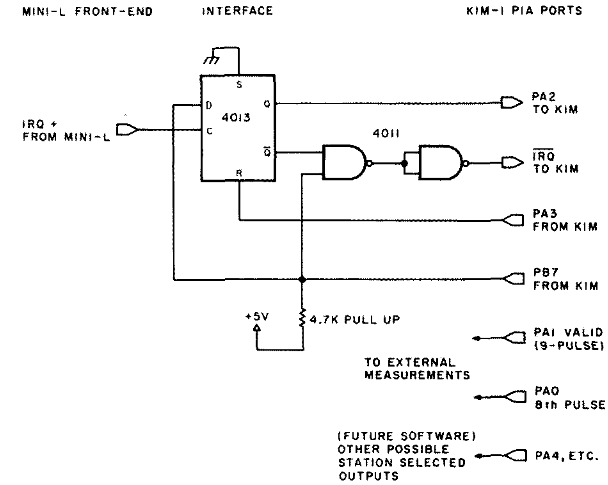

Fig. 8. Composite master sync hardware.

loran-C signals.

A listing of this short program is illustrated in Table 1. The program is located in the RAM scratchpad area of the 6530 chip on KIM starting at 1780, thus saving all of page zero for other uses. While the program works well as it stands, it would be difficult to expand to include time-interval measurements because the KIM clock inherently has to cycle through the timer in order to generate the desired interval. Other timing techniques are required for more sophisticated loran-C time-interval measurements.

Composite Master Sync Software Ideas

Software methods which depend on detecting eight 1 ms space pulse envelopes before providing an output and also detect the 9th pulse after a 2 ms delay have been devised by Jim Nickum, electrical engineering student here at Ohio University. We call this a composite envelope method, since it depends on detecting all 8 or 9 of the properly spaced pulses before generating an output. This is contrasted to envelope cycle matching methods which generate precision words for each pulse and effectively measure pulse to pulse or cycle to cycle of all 8 sets of pulses. Nickum's routine requires less than a page of KIM-1 memory and uses the interval timer on the 6530 PIA chip. The program listing is shown in Table 2. Fig. 8 is the interface for the composite master sync routine.

PA0 is programmed to provide an output pulse after each 8-pulse group. PA1 is programmed to provide an output after a 9-pulse group. There is some delay and jitter in the position of these output pulses with respect to the end of the master and slave pulse groups. However, this delay is relatively constant so that a rough measurement of time interval may be obtained by observing the signals on a scope trace. The program is useful for educational purposes with a dual-channel scope and triggered sweep.

The program is reliable as it stands in that it only provides a proper output when a valid set of 8- or 9-pulse groups are detected. However, noise and cross-chain interference often prevent an output pulse from appearing. During severe thundershower weather with spherics activity at the 100/minute rate, many of the loran-C pulse groups will be missed. However, it is still possible to obtain information because those 8-pulse groups that are found will have the correct relative spacing in time, even if they occur only every other frame with some master or slave groups missing. This idea of generating a composite envelope signal is still rather

Time-Frequency Notices

The U.S. Naval Observatory, 34th and Massachusetts Ave., N.W., Washington DC 20390, publishes a weekly "Daily Phase Values and Time Differences — Series 4" tabulation of the loran-C, omega VLF, and network TV frequency standard stability compared to each other and to cesium atomic clock time. This information is obtained by a worldwide monitoring network with a measurement precision of 1 x 10^{-14} per day. Loran-C stations are typically maintained by making small changes every few weeks, like 0.01 microseconds, so that all chains are accurate to at least 0.1 microseconds (1 x 10^{-12}) at any given time. A subscription to this service is available by filing a qualification form with the USNO. They also have other bulletins available describing how to convert received loran-C pulse time of reception to UTC time of day and other information on the dissemination of very precise time-frequency data. Radio amateurs interested in this precision timekeeping should write to the USNO for a catalog of their services.

like loran-A and would not provide high precision. The program might be used as part of a more sophisticated time-interval processor, where it serves something like the search and track mode of operations to find the desired chain.

Future Hardware and Software

The real problem for time-interval measurements is still more complex. One of the most recent marine receivers (Texas Instruments model TI9000 @ $2095) uses high speed TI 9900 series microprocessors with 100-nanosecond multiplexed PLLs for 3rd cycle matching to the pulse envelope. In our labs, we are experimenting with a KIM-1 6502 microcomputer by preprocessing the loran-C edge information with an external high-speed word generator. We estimate that about 4K words of processor memory will be required to do the job.

We are also working on a manual search, autotrack receiver, all in CMOS hardware. A 10-chip digital phase locked loop is used for each station. Three loops are required for a simple marine type of receiver, with a 6-chip readout and control system. A small scope such as the new NLS MS-15 Miniscope is used as a signal acquisition aid.

The best receivers now and in the future will use PLL methods, locking to selected cycles of the loran-C carrier signal. The present Mini-L rf board is capable of being modified to provide the proper input signals. Future articles will present some of these concepts as they go from the breadboard stage into a packaged system.

Navigation software for use with time-interval numbers is still another problem. At this point, it appears that two separate microprocessor systems would be best, since the time-interval processor is going to have to work fairly hard and steadily to keep up with the loran-C signals. Thus, an additional micro system is suggested to solve the coordinate transformation problem, which is a whole new story for future navigators.

Parts List

The following items are available:

(1) Set of two circuit boards, Mini-L and preamp — $8.50
(2) Reprint of *73* articles on Mini-L receiver — $1.50
(3) Set of i-f cans and tuning capacitors for Mini-L — $4.95

Send check or money order, no COD, payable to: R. W. Burhans, 161 Grosvenor St., Athens OH 45701. Ohio residents add 4% tax to total. Items postpaid by 1st class mail.

Additional items on VLF receivers, reports, and software are available or in preparation. Write for information, including an SASE.

The Fairchild uA721PC integrated circuit was at Fairchild distributors as of June, 1977.

Mouser Electronics, 11511 Woodside Ave., Lakeside CA 92040, stocks transformers and all the resistors and capacitors used in Mini-L (minimum order is $20).

The LM339, CD4013, CD4049, 2N2907, MPF102, 7805, and 1N914s are available from a number of dealers advertising in the pages of *Kilobaud* and *73* magazines.

Summary

The idea of Mini-L is presented to suggest different methods that the skilled experimenter can use with loran-C signals. The front-end hardware can be fabricated at quite low cost for an envelope-type processing system. The suggested hardware and software experiments are primarily educational and are not intended to be used as a finished navigation system or time-interval measurement device. Of primary interest to the radio amateur are the relatively simple methods of using loran-C for frequency standard calibration, even at long range beyond the normal recommended navigation coverage.

Acknowledgements

This article has been prepared as a technical spin-off from a more comprehensive study of loran-C supported by NASA Langley Research Center, Grant NGR 36-009-017. The help of Dr. Robert W. Lilley and Mr. James Nickum on the software processing problems is gratefully acknowledged. I also wish to thank the more than 50 individual customers who have obtained prototype Mini-L board materials for helping to expand the general knowledge of loran-C for the low-budget experimenter. ■

Home-Canned Dummy

—cheap half-gallon load

Michael J. Di Julio WB2BWJ
97 Woodside Rd.
Maplewood NJ 07040

Steven B. Waldman WA2JZR
5 Victoria Court
Morganville NJ 07751

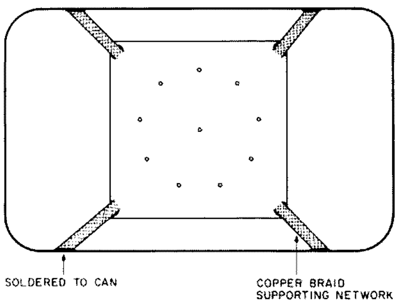

Fig. 1. Bottom view of the can.

In today's times of high prices, it is nice to know that home brew dummy loads are still within the price range of the poorest amateur. Each of our half-gallon gallons was constructed for less than $3.00 using readily available materials.

One-gallon paint thinner cans were prepared for the project by cutting off their bottoms with an ordinary can opener. This was followed by a thorough washing and drying procedure to remove any trace of the flammable contents. Next, twenty 470-Ohm, two-Watt 10% resistors (ten for each load) were sorted between the two of us so that we had equal numbers of high and low values. This gave us parallel combinations that were very close to 50 Ohms. Each group of ten was then soldered between two 3" x 3" pieces of 1/16" brass plate predrilled to accept nine resistors in a 2"-diameter circle with the tenth one in the middle.

A hole was then punched on top of the can to accept a suitable connector. In our case, a flange-mount SO-239 was the choice. The flange of the connector was soldered to the can to make an oil-tight connection. The rear of the connector was also epoxied over to prevent oil seepage through the center conductor.

The resistor network was then mounted in the can, supported by a 2" length of heavy-gauge wire soldered from the center pin of the connector to one side of the resistor assembly. Four pieces of copper braid were soldered to the bottom of the resistor network at each corner and then soldered to the can for support and to provide a good ground plane.

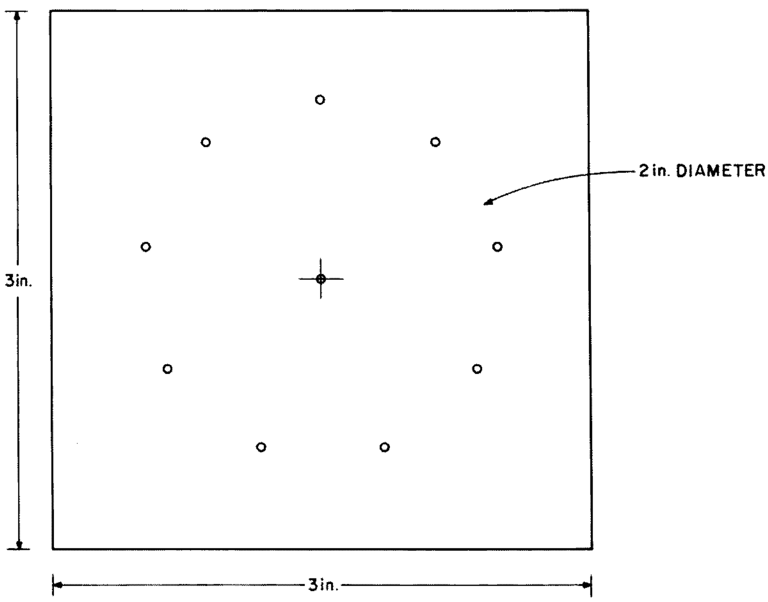

1/16in. BRASS PLATE (2 REQUIRED)

Fig. 2.

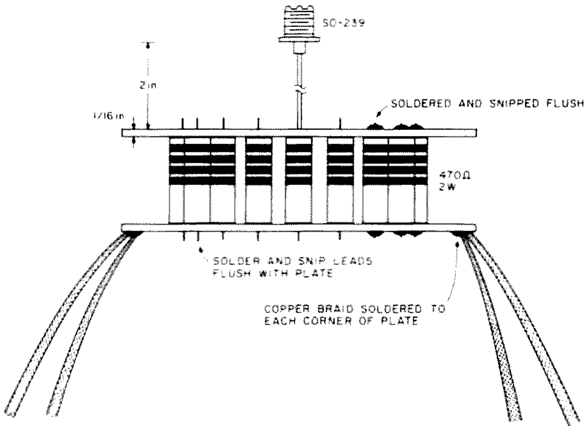

Fig. 3. Resistor network.

The can was sealed by cutting a piece of 1/16" copperclad PC board approximately 1/4" larger than the base and soldering this to the bottom of the can.

Testing the load on a Hewlett-Packard network analyzer model 8407A showed that the loads were purely resistive at 50 Ohms up to 32 MHz. The can was filled with a gallon of 30- or 40-weight motor oil (the cheapest brand available). The dummy load was designed for transmitters in the 200-Watt class, but it is able to take at least twice that power. It is advisable to loosen or take off the cap of the dummy load when in use to vent any expanding oil or fumes that may come off when the load is used at high power. ■

A. A. Wicks W6SWZ
30646 Rigger Road
Agoura CA 91301

De-Zap Strap

—so you can MOS around

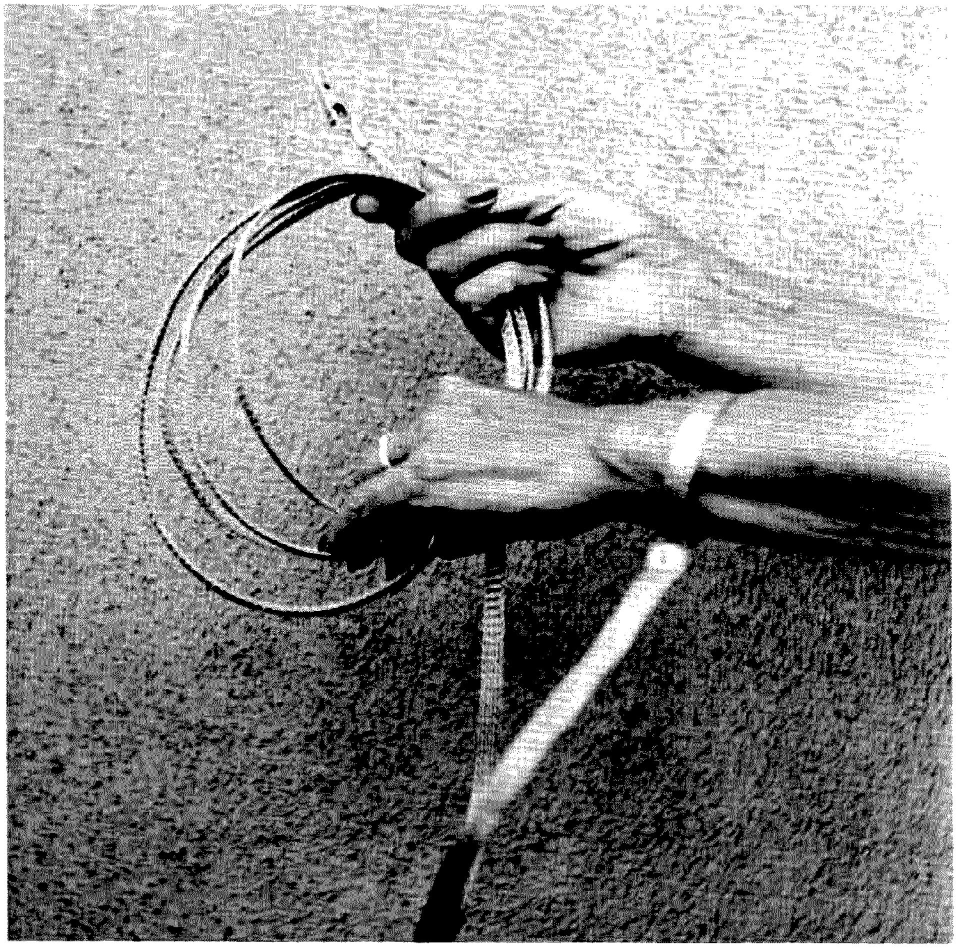

Completed grounding strap attached to user's wrist. Alligator clip is attached to earth ground.

Anyone handling and working with uninsulated, gate-protected, metal oxide semiconductor field effect transistor (MOSFET) devices should be aware that static electrical charges accumulated on a person's body are quite sufficient to "zap" these devices into oblivion, as far as operational capabilities are concerned.

It is standard operating practice, now, for the manufacturer to supply these devices with all connection pins shorted together – quite often by foil or a metal clip. It is prudent, and a good technical practice, to maintain one's body at ground potential whenever handling these critical units, right from the time of removing them from their packaging until they are installed in a circuit. (They should *never* be installed or removed from a "live" circuit, whether you are grounded or not!)

A very simple grounding strap may be constructed, which permits you to "ground" your body, thus maintaining it at ground potential at all times when you may be handling a MOSFET.

Materials required for this important tool are:

1 Length of metallic flat braid, 7/16-inch (preferred)
1 Resistor, 220k Ohms, ¼ Watt or larger
1 Alligator clip, 2-inch
Eyelets and snap fasteners, size no. 15 (3/8-inch)

One source of the latter items is the Scovill Sewing Notions Division of the Scovill Manufacturing Company, Spartanburg, South Carolina. These are available, eight sets to a package, at sewing supply stores or notion counters anywhere. The contents comprise metal rings with protruding points, metal rings with a groove in

them, and metal rings with one protruding stud.

The following standard tools will be required: hammer, soldering iron (minimum 100 Watts), flat file (smooth cut), hand or electric drill with 3/32-inch drill bit, and metal-trimming shears or side-cutting pliers. Two additional items you'll need are a pencil with an eraser-tipped end and a wooden spool used for sewing thread. (It's a temporary use – so it may be either empty or wound with thread for this application.)

The length of metal braid should be sufficient to go from your wrist, at the place where you will be working with a MOSFET device, to the nearest good earth ground. Rather than make this length excessive (six feet is a recommended maximum), your work should be taken closer to a grounded location.

Procedure

Place the flat braid snugly around your wrist to determine the position of the snap fastener. Allow sufficient braid for finishing off the end (one or two inches). Mark the position of the fastener – a felt-tip pen will do this nicely.

Place an eyelet ring with points on it on a smooth hard surface, with the points facing upwards. Place the side of the braid that will become the outside surface of the strap on top of the eyelet, using the previously marked position on the braid as a guide. Using the pencil-end eraser, press the braid down on the eyelet so that all of the eyelet points protrude as much as possible through the braid.

The plain rings that come with the eyelet kit will have one side marked with a color spot. Place this marked side down over the protruding points of the eyelet, insuring that all points are guided into the groove in the ring.

Carefully place the end of the wooden spool over the ring, so that the hole in the spool centers over the hole in the ring. Hammer the end of the spool sharply until the ring is secure on the points. (Correctly installed, you should be unable to insert your fingernail between the ring and the braid.) If the center hole of the ring is hammered too severely, it will be damaged, and you must remove both rings and start over.

Repeat the second step above at the point where the snap stud contained in the kit will be installed. Before installing the stud, check its position for snugness on your wrist, so that the stud will be able to enter the ring straight and parallel, without excessive side strain.

Place the stud on the installed ring with the stud projection up. Again using the spool, with the center hole of the spool clearing the stud, hammer the stud onto the ring projections, as previously described.

Carefully drill the exposed braid material from within the center of the first installed ring.

Apply solder to both sides of the braid, from the end of the braid up to and around the stud. Only sufficient solder need be applied to slightly stiffen the braid, and to hold in place the individual wires comprising the braid.

Trim and file the end of the braid for appearance and to provide a gripping tab about ¼-inch away from the stud.

Install and solder the 220k resistor and the alligator clip to the other end of the braid. This completes the grounding strap.

In order to use the tool, wrap the braid around your wrist (preferably the wrist of the hand that will be holding the MOSFET), snap the eyelet fastener together, and attach the clip to earth ground. ■

Leon Baldwin VE2TM
4000 de Maisonneuve, Apt. 810
Montreal, Quebec
Canada H3Z 1J9

No, Not Another 22S Mod?

—yes, another Icom 22S mod

The addition of a DIP 8 SPST switch to the Icom 22S will give you the capability of switching in diodes to obtain any frequency you may unexpectedly want. With it you can check the possibility of hitting a repeater before soldering in the diodes. Adding the DIP does not require programming your board in any special sequence.

Normally, with 22 channels you will have all you need for your location; the idea of the DIP is to give you an extra flexible channel to cover the unexpected.

One DIP, 8 diodes, and very little sweat do the job for about $2.50.

On channel 23 of the board, solder a diode, banded end down, in each of the holes opposite the diode numbers. No connections are made to the channel 23 horizontal crossbar.

To the other end of each diode, solder a wire. Run all 8 wires between the meter and the rotary switch toward the top cover where the DIP will be located.

A 9th wire is connected to position 23 on the rotary switch. This is the only contact on the switch with no connection to it and is accessible from the top near the meter.

The DIP is mounted on a piece of perforated board cut to the same width as the DIP, but long enough to allow for mounting a screw with a spacer at each end.

Wires from the diodes are soldered to each of the 8 pins on one side of the DIP. Make sure to get the wires in the right order.

The single wire from the rotary switch is connected to the other 8 pins, tying them all together. Wires should be soldered as close to the board as possible, making the DIP solid in the board.

Mount the DIP on the top cover in line with the center of the meter. The center line of the DIP is 3/4 of an inch back from the edge of the top cover flange. If mounted further back or more to the left, it will not clear other components.

The mounting hole should be the same size and shape as the DIP and cut for a tight fit.

Two screws with spacers hold the assembly to the cover.

If you have wired the switches in the logical manner, SW 1 is DØ through

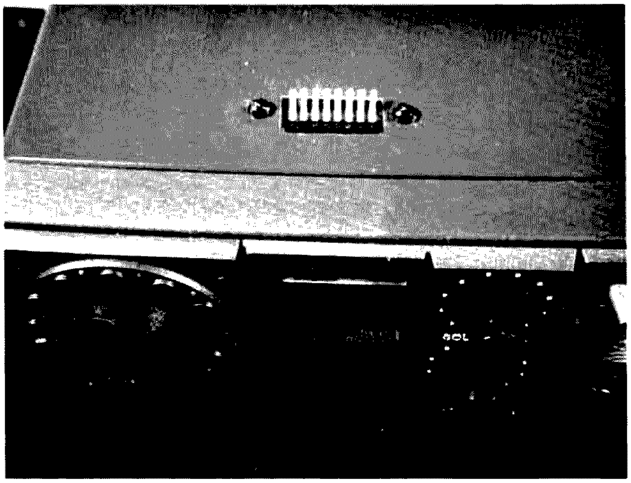

Location of DIP flush with top cover of 22S.

Internal view of DIP mounted on top cover of 22S.

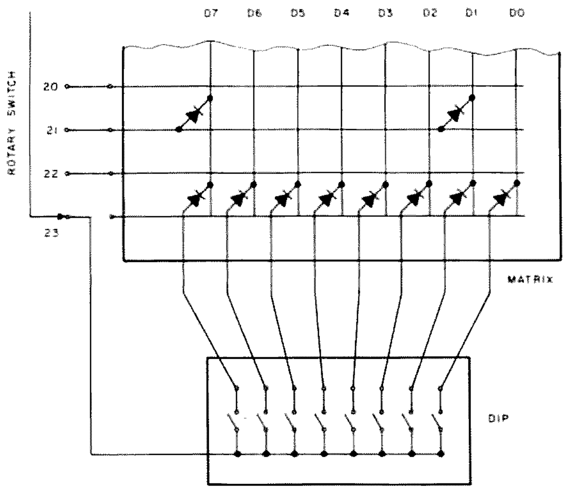

Fig. 1.

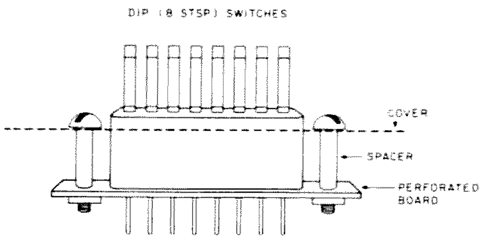

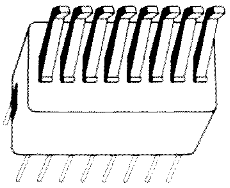

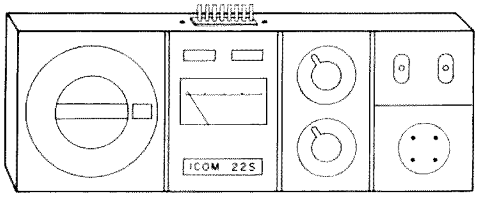

Fig. 2.

SW 8 which is D7, you can use your 22S charts or formula supplied to program a frequency.

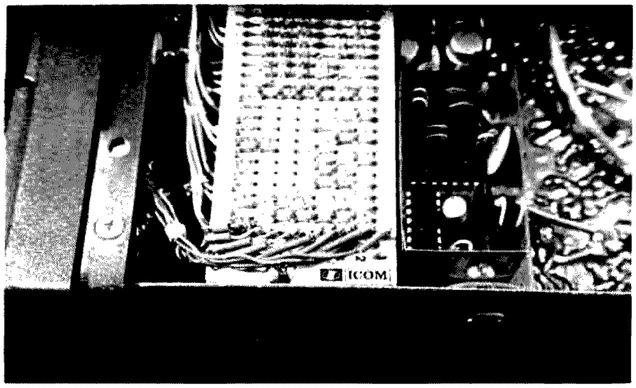

Connections to channel 23 on board of 22S.

However, not using any calculations at all, just a "flick of your DIP" number 8 will put you right on 146.31. Once any frequency is programmed, your switches, 1 to 8, will add or subtract 15, 30, 60, 120, 240, 480, 960, and 1920 kHz to (from) your programmed frequency. With SW 8 on, adding SW 2 gives you 146.34, etc.

A simple method to program a frequency from scratch is to think of your frequency in its form generally referred to on the air. 146.520 is referred to as simply 52.

Add to this the number 161 and "flick your DIP" to obtain the resultant number. You have programmed the desired frequency (switches represent 1.5, 3, 6, 12, etc.).

Example: 146.550 becomes 55. 55 + 161 = 216 [SW 8 (192) + SW 5 (24)].

In the 147 MHz range, add 100. 147.270 is not 27, but 127. 127 + 161 = 288 (switches 8 and 7). ■

Howard M. Krawetz N6HM
654 Barnsley Way
Sunnyvale CA 94087

Scare the Hell Out Of Burglars

—ham shack alarm system

Only 2 seconds at a control panel and the turn of a key and your house and radio shack are rigged with an alarm.

The burglar alarm described here is designed to be very reliable and to guard against false alarms, and it is easy to construct. Basically, the unit is a latching dc relay with no semiconductors in the circuit.

This system may be used with either 12 V dc or 6 V dc. In either case, the lack of semiconductors makes the circuit less sensitive to voltage or temperature changes. My system is designed for 6 V dc. The relay is from an old Radio Shack electric build-it set. The contacts should carry about 3 Amps. The 15k resistor, R1, is used to current limit the system. This reduces the amount of current on the sensors' contacts and also increases the lifetime of the relay coil. I set my system to operate on 8 mA.

To select a current limit resistor, I just placed an ammeter across the series sensors circuit. I used a 25k Ohm pot to find the point where the relay would trip and hold reliably with minimum current. Don't use a relay that requires more than 10 mA to energize.

My system is set up to use a nonrechargeable dry-cell battery. The purpose of diode D1 is to isolate the battery from the ac supply. By selecting an ac supply using the components shown in the schematic, the output voltage will be about 1 volt higher than the battery voltage. Therefore, under normal use, the battery contributes nothing to the circuit unless the ac power fails. Then the battery takes over completely.

The meter shunt is a 20k Ohm miniature pot used to set the 0-1 mA meter at some convenient place. I keep mine at about 2/3 full scale. A meter was chosen rather than a lamp, because it requires less current to indicate the alarm "on" condition.

To prepare the shack and the house, I used magnetic reed switches on the doors and windows. My sensors are 3/8 inch in diameter and 1½ inches long. These switches are set into the top of the door frame. To set the switches in, first drill a 3/16-inch-diameter hole up into the attic. Use a 3/16-inch by 18-inch-long drill available in the electrical section of many hardware stores. Then drill the 3/8-inch hole 1½ inches deep into the door frame. Line up the hole with the top edge of the door, and drill a 3/8-inch-diameter hole into the door edge. Drop the magnet portion of the sensor into the door. Fish the switch wires through the attic door frame hole, and attach them to the sensor switch contacts. Then put a little glue on the sensor, and pull it up into the door frame. These sensors cannot be seen when the doors or windows are closed.

I use 30-inch-wide Tape Switch in sections 3 feet long under the carpets for the parallel normally-opened sensors. These are located in major passageways and by certain doorways.

The only special case is the aluminum patio door. There I

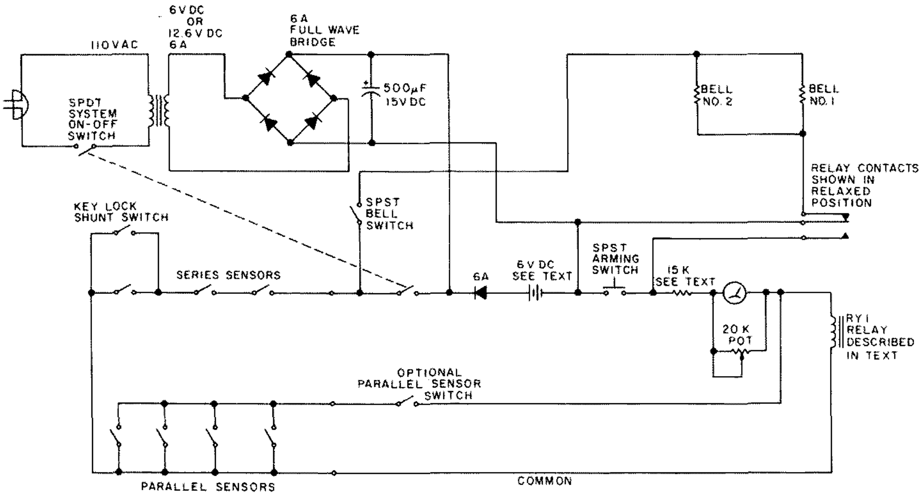

Fig. 1.

glued the magnet to the edge of the door with rubber cement (RTV). The switch portion is set into the door frame above the magnet in a normal manner.

Outside one of the doors you will need a keyed shunt switch. The purpose of this switch is to short out one door sensor so that you can get in and out of the house without setting off the alarm. I ran these switch wires and all other switch wires all the way back to the control box. That way, even though the switch lock is permanently mounted by the front door, I can select any other door to shunt. For instance, I can connect this switch to shunt the kitchen door. Now if a good lock-picker comes along, he may disarm this switch thinking he has shunted the front door and set it off by entering through that door instead of the kitchen door. This means I have the inconvenience of walking to the front of the house to arm and disarm the kitchen door, but just think of the surprise an intruder would have when he found out he had not disarmed the proper door for entry.

I placed alarm bells in the attic against the outside vents at each end of the house. Placing the bells inside the attic prevents anyone from tampering with them.

Unless you set off the alarm, and it remains on for an extended period of time without ac power, the battery should last almost to its shelf life. The big secret of this system is to find a sensitive relay (will respond with 3 to 10 mA) with contacts that will handle relatively high currents (2 to 3 Amps).

Operation is as simple as 1, 2, 3. First be sure all switches are off. Then:

1. Turn on the system power switch.
2. Press and release the momentary action switch. If no one is stepping on the carpet (parallel) sensors, and all the door and window (series) sensors are closed, there will be a meter indication. This energizes the relay, which then bypasses the momentary action switch.
3. Switch the bell switch to ON.

You are now armed and secured. Walk out the shunted sensor door, open the keyed shunt switch, and the last door is armed. Momentarily opening any series switch or closing any parallel switch causes a loss of power to the relay. This sets off the alarm. The only way to turn it off is at the control box. ■

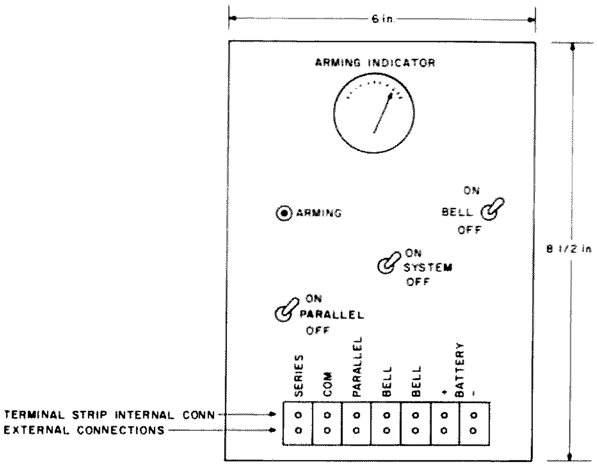

Fig. 2. Alarm front panel. All parts not shown are just hung on or glued to the back of the 1/16" aluminum. Panel width was selected to fit onto wall studs in a hidden place.

Mike Morris WA6ILQ
P.O. Box 1215
W. Arcadia CA 91006

The COR Goes Solid State

—turning two Midland rigs into a repeater

This article describes a simple carrier-operated switch for the Midland 13-509 220 MHz radio. There are several uses for such a device, ranging from switching the meter light in your mobile to get rid of the nighttime under-dash searchlight, to switching off the AM-FM that Detroit installed, to switching the external amplifier-speaker in that noisy truck, or even to keying the transmitter in a repeater.

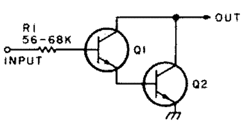

Fig. 1. The basic circuit. Q1 and Q2 are general purpose NPN (see text).

This unit is almost idiot-proof. In its simplest form, Fig. 1, it requires 1 resistor and 2 transistors.

This circuit was originally developed to key the transmitter in our breadboard repeater. That conglomeration grew and grew, and is a much-modified 220 Midland reboxed and bolted into an old Motorola J-series cabinet.

Since then, other uses have appeared. One of them, shown in Fig. 2, is in my mobile. The extra diodes are there to isolate the COS from the PTT line, yet allow either to turn the lamp on. The extra resistor is there to shunt the switch and keep the lamp warm, but not hot. In the computer industry, it is called a "keep-alive" resistor. The idea behind it is that a lamp that is switched from dull red to white hot and back will last longer than one that is switched from dead cold to white hot and back. If you have seen pictures of some of the IBM 360 series, some of which have hundreds of lamps, you can appreciate the importance that they hang on lamp life.

Before any extensive work is planned, I suggest that you purchase the service manual (#13-22084) from Midland, P.O. Box 19032, Kansas City MO 64141. It costs $2.00, is 27 pages long, and what it doesn't cover isn't needed.

The radio has gone through 3 versions, which I have named, for lack of anything better, the blackface (the original), the tanface, and the current version, the brownface (chocolate bar color). The manual covers the blackface, but the only differences in the others are some parts values and the dye in the plastic.

To get back to the COS, the operation is fairly simple, but, for full understanding, some information on how Midland's squelch works should be presented. A partial receiver schematic is shown in Fig. 3.

Normally, in a squelched condition, incoming noise from the discriminator is rectified by D4 and D5, filtered by C89, voltage divided by R54 and R55, filtered again by C91, and fed to TR13, saturating it and effectively grounding its collector. This shorts both the bias and audio to TR14, squelching the receiver.

However, when a signal

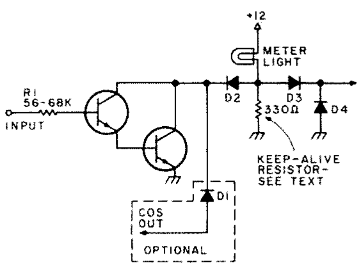

Fig. 2. My mobile. The diodes used were surplus IN4001s, but any general-purpose silicon should work. D1 is optional; I ran it to pin 4 of the mike socket. D2 and D3 allow either to turn on the meter light. D4 kills the PTT relay transient.

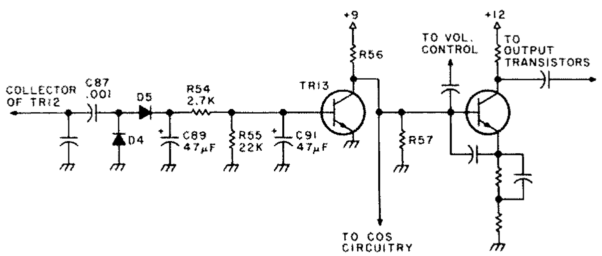

Fig. 3. The Midland 13-509 squelch circuit. The workings are in the text.

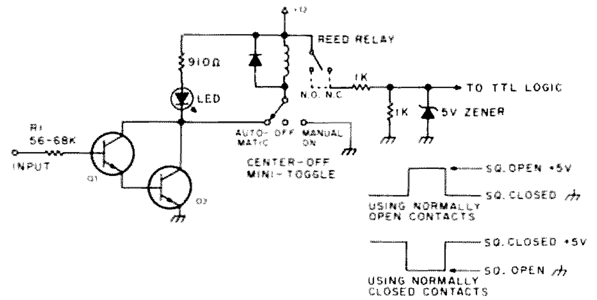

Fig. 4. The first implementation in a repeater. The reed relay was used to get complete isolation from RX to logic. The only limitation on relay size is Q2's max. collector current.

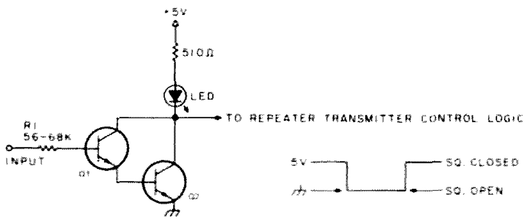

Fig. 5. The current repeater configuration.

comes in, the noise to D4 and D5 goes away, and the voltage across C89 drops, cutting off TR13 and enabling TR14 to conduct and pass audio.

I can find no useful purpose in C91, except to lengthen the squelch tail. I pulled it out of my mobile and was very pleased with the results. In fact, our repeater no longer has C91 in its receiver. Try it; you can always put it back if you don't like it.

We now see that Midland already has TR13 functioning as a switch, with its collector grounded when squelched and at about 2 volts when unsquelched. We can simply pick off the collector voltage with a high impedance amplifier and switch a light bulb, fire a cannon, close a reed relay, key a transmitter, or whatever our hearts desire.

All of the circuits shown in the figures are the same, except for external differences. The basic circuit is a Darlington pair, a characteristic of which is that the circuit's total gain is the product of the individual transistors. As an example, the circuit in my mobile uses 2N2222s which are rated at 50, which puts the total gain at a theoretical 2500. Almost anything will work, as long as the leakage current is fairly low. I wouldn't mix silicon and germanium, however. 2N708s, 2N3866s, 2N3638s, 2N2219s, 2N2102s, and 2N1711s have all been tried, plus some 2-for-a-nickel TO-5s at the local surplus store. There is no restriction that the two transistors have to be identical, either. The only adjustment that might be required is to vary the value of the series base resistor. For extra current handling capability, the output transistor could be a power unit like a 2N3055 or something similar.

Installation is not critical, as there are no rf or critical capacitances floating around. Just make sure that you don't defeat the hinge action of the circuit board.

Well, there you have it – a simple, cheap, and quick project which even my father WB6SOX can understand – and he claims to have gotten lost when they put the fourth element in the vacuum tube!

If, after all this, anyone has questions, I will be happy to answer them, but be warned – no SASE = no answer. ■

RTTY Loop

Marc I. Leavey, M.D. WA3AJR
4006 Winlee Road
Randallstown MD 21133

This month, we complete the first year of "RTTY Loop." A lot of ground has been covered, from basics to beneficials. Above all, however, let's not forget that Teletype is fun! I'll try to explore some of that entertainment right now.

Starting simply, have you ever seen a kid around a Model 15? The next time you have children in the shack, relatives, neighbors, or foundlings, put the printer on local loop and let it idle. Something magical happens when a child discovers that noisy, overgrown, electric typewriter. Kids from three to a hundred have become enraptured; they sit at the keyboard for hours, just typing their names or ringing the bell. The child in all of us is excited, and it makes a fascinating introduction to the world of amateur radio.

One of those things that always gets them is RTTY art. The technique for producing your own TTY pictures is not complicated, and has been covered in *73* and *QST* in the past. The first step is to acquire some RTTY pictures that someone else (preferably experienced) has produced. The easiest way to do that is to tune around the HF bands looking for a long taped transmission. Very frequently, you will find that such a transmission is a picture being sent. If you know anyone in your area who is a RTTY nut, he or she may well have a stockpile of artwork to share with you. And "Any good pictures to send?" is always a good question during a QSO.

Once you have looked at a few pictures, such as the ones printed (albeit much reduced) here this month, you will notice that there are three major ways of producing these pictures.

The first, and easiest for the beginner to master, is the use of one character, frequently "X" or "M", to form a block drawing or grid pattern. Letters are relatively easy to produce with this technique, and even simple pictures can be made by the neophyte. Variations on this method include using different letters to coordinate with the large design, or to spell out a message within a message.

While block drawing with one character can produce recognizable pictures, there is a limit to the resolution you can get with just a grid. To try to obtain finer detail, many RTTY pictures use various characters to provide shape or slope of their own. Typical characters used include the /, (,), and !, and the letters A, V, and O. By using a combination of the block technique and letter-shape bordering, fairly nice work can be produced with a small amount of work.

The most tedious, beautiful, and difficult to master RTTY art uses various characters to simulate halftone shades. Typically, shading from dark to light is accomplished as:

MMMMMHHHHHIIIII:::::.....

with multiple variations and occasional overprinting. For many years, some of the finest examples of this type of RTTY art have been done by Don Royer WA6PIR out in Encino, California. Back in January, 1972, Don had an article on page 13 of *73* that went into detail on this technique and included many striking examples.

To attempt to illustrate these techniques, three examples of RTTY art are printed here. Fig. 1 is an example of the first technique. Notice that the letters forming the background spell out a message which elaborates on the overall design. Fig. 2 demonstrates the "bordering" technique. Here, blank space rather than blocked-in letters contributes to the feeling of a line drawing rather than a typed picture. Finally, Fig. 3 shows what can be done with carefully executed shading to produce a beautiful picture.

Moving from the visual to the audible, have you ever played a tune on your TTY? It has two bells, you know, and a number of tunes can be played, in rhythm, by pounding out the BELL character, other characters for timing, and occasional use of the end-of-line bell. At Christmas time, one frequently hears "Jingle Bells," often with simultaneous greetings printed out. Other tunes

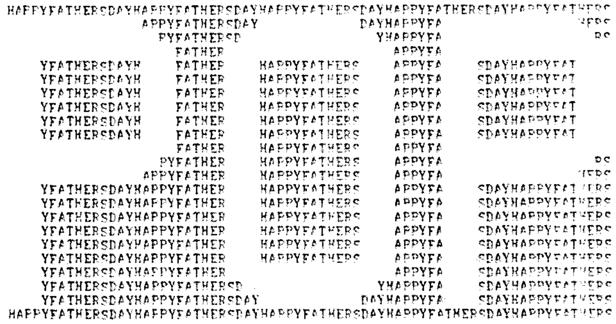

Fig. 1.

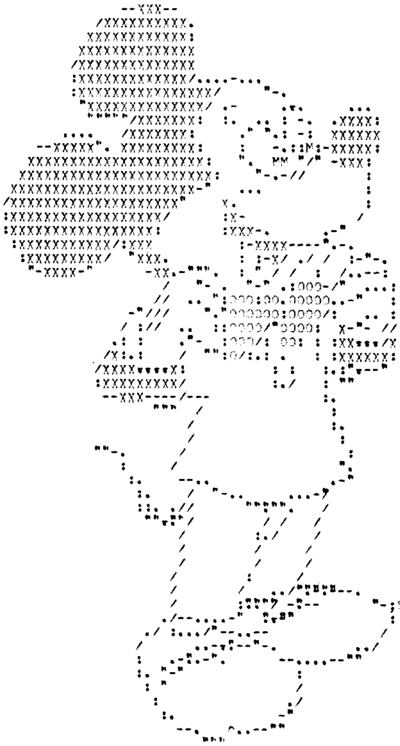

Fig. 2.

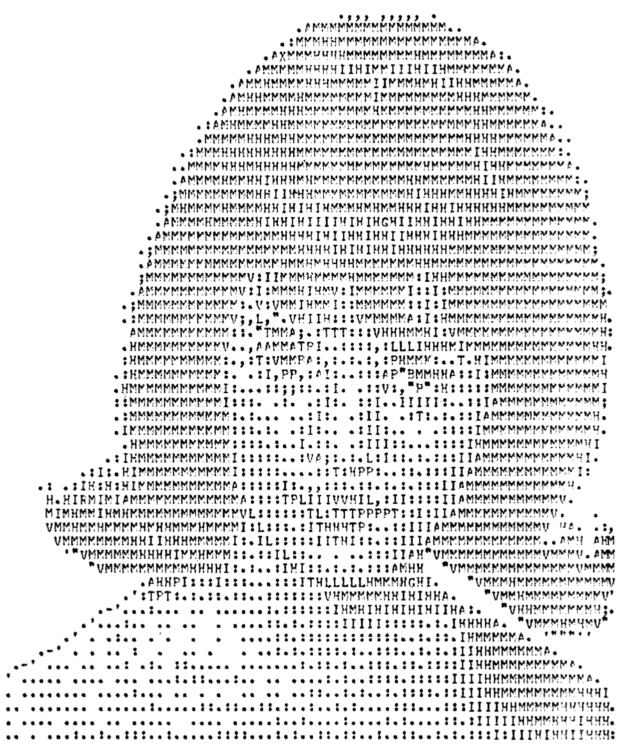

Fig. 3.

TO GET CHARACTER	TYPE EXACTLY
A	V S S V
B	LTRS Y Y R
C	C Z Z R
D	LTRS Z Z C
E	LTRS Y Y Z
F	LTRS S S E
G	C Z B R CR
H	LTRS SPC SPC LTRS
I	Z Z LTRS Z Z
J	CR T T K
K	LTRS SPC R Z
L	LTRS T T T
M	LTRS LF SPC LF LTRS
N	LTRS LF SPC CR LTRS
O	C Z Z C
P	V S S I
Q	C Z B C T
R	LTRS S F P
S	L Y Y D
T	E E LTRS E E
U	K T T K
V	A N T N A
W	LTRS CR SPC CR LTRS
X	Z R SPC R Z
Y	E LF M LF E
Z	Z B Y W Z
1	L LTRS T
2	B Y Y L
3	Z Y Y C
4	U SPC SPC LTRS
5	J W W F
6	C Y Y N
7	Z D S A
8	FIGS Y Y FIGS
9	LF Y Y C
0	E C Z Y B C T

* ABBREVIATIONS USED: *
LTRS: LETTERS
FIGS: FIGURES
SPC: SPACE
LF: LINE FEED
CR: CARRIAGE RETURN
* USE "BLANK" KEY TO SPACE BETWEEN CHARACTERS. *

Fig. 4.

are possible, based on your personal sense of rhythm. The basic method involves inserting printing or non-printing (i.e., LTRS or FIGS) characters between BELLs so as to output the proper timing. Try it!

Finally, have you ever tried tapewriting? By carefully choosing your characters, the pattern of holes punched in TTY tape can form any letter or character. Now, while this may not seem like much, give it some thought. Crazy things like "Happy Birthday, Bob!" can be sent to a station after telling him to turn on his tape punch. Fig. 4 diagrams which characters to use for the commonly used letters and numbers. A convincing simulation of a moving light display (a la Times Square) can be produced by enclosing a loop of tape appropriately punched (like FCC Bans CB Operation . . .) in a box with a motor to move the tape and rear lighting. Just the thing to perk up the model railroad.

Got a letter this month from Lee Crawford W1PJA/3 in Wilmington, Delaware, who is looking for a source of TTY equipment. I don't know what to suggest, Lee. I hesitate to start listing an "equipment exchange" in this column for several reasons. Besides the problems of implied endorsement, the lead time on this column makes any semblance of timely notices difficult. By the time I could tell you all about an item, two or three months may have gone by and it could well have been sold. It would be far better for anyone with equipment to sell to take out a small ad in *73*. Perhaps if enough RTTY ads were received, Wayne could be persuaded to lump them all in one place for easy reference. Meanwhile, if anyone in the Wilmington area knows of a machine that is available, Lee's looking!

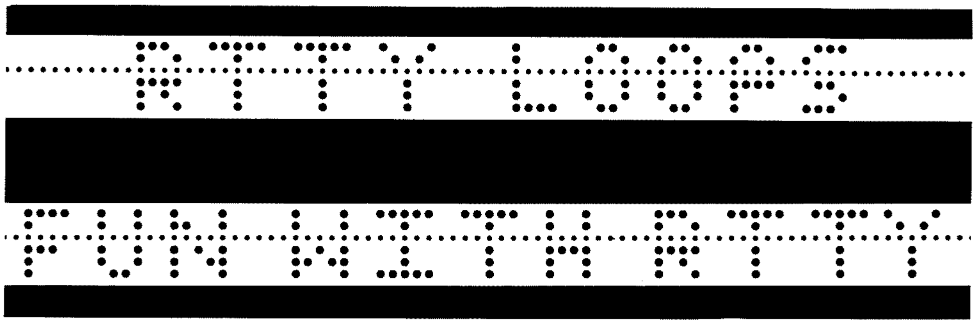

Fig. 5. Tapewriting example.

A note from Mark Wilson WØZSU (wonder if he is the magician?) asks again about the so-called "RTTY" position on the Heath SB-303 receiver. Mark, this was evidently designed for a companion that got shoved aside when the new digital line came out. The reason that it does not work with the SB-401 transmitter is that transmit and receive frequencies end up offset more than one kHz. The keyer circuit which was originally shown in *73* in August, 1976, and reprinted in this column a few months back and in the new *RTTY Handbook* is a good one which many hams have used to get this otherwise fine transmitter on RTTY.

Next month we will delve into more exotic types of RTTY, in particular, using a computer to receive amateur RTTY transmissions. I don't know how many of you have home computers, but I do, and it's one of the most fascinating aspects of this hobby. As I'm sure you have been reading, a microcomputer can do all kinds of things. For example, this month's column was written and edited on my SWTPC 6800 system, using a simple line editor.

More next month; meanwhile, have fun!

Ham Help

Some time ago, I wrote asking for the schematic of the RME HF 10-20. Here are the results of your "Ham Help":

1. Hamgram from W7LNG via WB6PVH with info on where I could get the schematic.
2. Letter from W9IOG with two addresses where I might get the information.
3. A photofact copy of the gear from W7DYD.
4. A Xerox™ copy of the gear from WB3BLR.

Who on Earth would do such a wonderful job? The answer is none but that gang of hams you and I associate with. I wish you would publish a special thanks to the hams I have mentioned above, possibly in "Ham Help" so they will be sure to see it. Again, many thanks to all concerned.

George N. Andrews WA6DWV
San Diego CA

I have a defective crystal I want to return to the manufacturer, but I can't find out from anyone who that is! The crystal says "K-W K4" on the side. Does anyone know the manufacturer?

Marvin Moss W4UXJ
PO Box 28601
Atlanta GA 30328

Oscar Orbits

The listed data tells you the time and place OSCAR crosses the equator in an ascending orbit for the first time each day. To calculate successive orbits, make a list of the first orbit number and the next twelve orbits for that day. List the time of the first orbit. Each successive orbit is 115 minutes later (two hours less five minutes). The chart gives the longitude of the first crossing. Add 29° for each succeeding orbit. When OSCAR is ascending on the other side of the world, it will descend over you. To find the equatorial descending longitude, subtract 166 degrees from the ascending longitude. To find the time it passes the North Pole, add 29 minutes to the time it passes the equator. You should be able to hear OSCAR when it is within 45 degrees of you. The easiest way to do this is to take a globe and draw a circle with a radius of 2480 miles (4000 kilometers) from the home QTH. If it passes right overhead, you should be able to hear it for about 24 minutes total. OSCAR will pass an imaginary line drawn from San Francisco to Norfolk about 12 minutes after passing the equator. Add about a minute for each 200 miles that you live north of this line. If OSCAR passes 15 degrees from you, add another minute; at 30 degrees, three minutes; at 45 degrees, ten minutes. Mode A: 145.85-.95 MHz uplink, 29.4-29.5 MHz downlink, beacon at 29.502 MHz. Mode B: 432.125-.175 MHz uplink, 145.975-.925 MHz downlink, beacon at 145.972 MHz.

Oscar 7 Orbital Information

Orbit	Date (May)	Time (GMT)	Longitude of Eq. Crossing °W
15814 Bbn	1	0001:07	57.5
15827 Bbn	2	0055:25	71.0
15840 Abn	3	0149:42	84.6
15852 Bbn	4	0049:02	69.5
15865 Bbn	5	0143:20	83.1
15877 Abn	6	0042:40	67.9
15890 Bbn	7	0136:57	81.5
15902 Bbn	8	0036:18	66.3
15915 Abn	9	0130:35	79.9
15927 Bbn	10	0029:56	64.8
15940 Bbn	11	0124:13	78.4
15952 Abn	12	0023:34	63.2
15965 Bbn	13	0117:51	76.8
15977 Bbn	14	0017:11	61.7
15990 Abn	15	0111:29	75.2
16002 Bbn	16	0010:49	60.1
16015 Bbn	17	0105:06	73.7
16027 Abn	18	0004:27	58.5
16040 Bbn	19	0058:44	72.1
16053 Bbn	20	0153:01	85.7
16065 Abn	21	0052:22	70.5
16078 Bbn	22	0146:39	84.1
16090 Bbn	23	0046:00	69.0
16103 Abn	24	0140:17	82.6
16115 Bbn	25	0039:37	67.4
16128 Bbn	26	0133:55	81.0
16140 Abn	27	0033:15	65.9
16153 Bbn	28	0127:33	79.4
16165 Bbn	29	0026:53	64.3
16178 Abn	30	0121:10	77.9
16190 Bbn	31	0020:31	62.7

LETTERS

from page 8

The second return trip required some delicate and potentially expensive repairs. The radio, which arrived yesterday, was not only in top shape, but again had the checkout spec sheet showing that the transmitter and receiver had been realigned, finals replaced, and other repairs/adjustments had been made. Again, no charge.

Yessiree, that $1500 for a new 350-XL doesn't seem so high after all.

I'm convinced! Just imagine what a wonderful world this would be if all customers were treated like Atlas treats theirs.

Joseph H. Cowan WA5TUM
Beeville TX

GOOD-BYE VEGAS

I wonder how many other hams were treated as I was in Las Vegas by the Sahara Hotel, where the SAROC convention was held.

I had paid for my hotel room a month in advance, and had received confirmation of my reservation.

I arrived at the Sahara Hotel at 11:30 pm Friday and asked for my room. I was told that there were no rooms available, even though I had paid for one in advance. Needless to say, I blew my top, but to no avail. They put me up in a motel about 4 miles away for that night.

At that time, I had lost my taste for SAROC, Las Vegas, conventions, slots, etc. I asked for my money back the next morning, had a few words with the convention chairman, and left Las Vegas.

I don't think I will ever attend another SAROC after that treatment. How can you depend on the Hotel Sahara word any more?

Am curious how many other hams received the same treatment.

Ralph Saroyan W6JPU
Fresno CA

JOKING?

It's just great to see how the FCC can still keep its sense of humor while laboring so hard under its immense workload.

Take the proposal in Docket 21135 about club calls. Processing these applications under current procedures can hardly amount to more than just checking to see if all of the boxes on the form are filled in, and that the form itself is signed. Approval, I would imagine, is pretty much automatic.

Now, to ease the administrative burden, the Commission will only grant calls where the application demonstrates a "compelling need" for a club call, if the proposal is enacted. I can see it in my mind's eye: Instead of a clerk (or a computer) scanning a form and wielding a rubber stamp, a committee will convene to weigh the merits of each application. No doubt there'll be an appeals procedure, and some mechanism for seeking a review of the full Commission.

The proposal is so absurd that it can only be a joke.

It is only a joke, isn't it?

Alan J. Gottesman W2TY
West Caldwell NJ

Sure, just as much of a joke as the equally (or more) stupid ban on ham amplifiers with 10m on them.—Wayne.

FOR THE DEFENSE

I just read the letter by an unidentified and apparently disgruntled author reporting deliberate illegal operation on the 7268 kHz "Waterway Net."

I became aware of this net about six months ago while in the "Islands" afoot. Since that time, I have signed in whenever possible. During that time, I have not heard any illegal operation. I have heard traffic refused to areas not covered with a third party agreement, and callsigns requested when neglected.

This net gives priority to low powered MMs, and otherwise has friendly discussions, mostly about weather and boats.

I have heard advice given to a boater in 15-foot seas with a balky engine, and directions to safe harbors when bad weather is expected. In short, the conduct, ethics, operation, and goals of the net have been very good during my acquaintance with it.

From the sidelines, I have noticed attempts of some to dominate the net without success. Perhaps resentment prompted the unsigned letter in the February issue of *73*.

Allen Bell W4IKV
Cape Canaveral FL

GREEDY?

Re your editorial, January, '78: Please keep your greedy hands off that part of the 20 meter band where sanity still prevails—from 14.100 to 14.200. We on this side of the Atlantic have only one hope of having a phone QSO within Europe or to some DX area outside of the USA, and that hope lies within that 100 kHz where the linear amplifier is still the exception rather than the rule.

My compliments on your magazine—excellent in quality and quantity.

Sean Linehan
Castleknock, Dublin
Ireland

Don't be stingy.—Wayne.

A WONDERFUL LIFE

It took me three years to find the receiver and transmitter to do the things I wanted and not become obsolete in a few years.

When I decided to subscribe to a magazine, I looked at all of them. *73* seemed to be the one that won't become obsolete either.

Sometimes I see letters that object to some of the articles in *73*. When I read one that doesn't seem to interest me, it may spark interest in someone else. It was one of those articles that finally interested me enough to start building your excellent projects using ICs.

Driving 40 miles to the city and not finding what I needed turned me to your advertisers. People like Integrated Circuits Unlimited and DSI Instruments must be praised. You can order what you want, no postage or handling charges to figure, and receive it in five to seven days from the other side of the USA. So why leave the shack?

Your magazine and advertisers make being an amateur a wonderful life.

Colin C. Corke WB2RNS
Albion NY

Bliss is 73 and some Colorado Kool-Aid.—Wayne.

GONZO

Please advise those who have been following the many articles of W7JSW (W. J. Hosking) that neither the printed circuit boards nor the assembled units are available from Contact Electronic Research and Development as mentioned in the Jan., '78, issue (pg. 167). This outfit appears to be out of business, as I sent them an order and had it returned.

Patrick Sheedy
Groveland NY

Shhh.—Wayne.

VE2AED VIBES

I recently installed the VE2AED Electronics scanner (advertised in the March, 1978, *73*) in an IC-22S. The scanner was a pleasure to build and a joy to use. Hats off to VE2AED. Thanks to *73* for a fine mag.

G. D. Fender W6SZX
Santee CA

We're getting a lot of good vibes on this.—Wayne.

Ham Help

Wanted: Information on Hailicrafters Model SBT-20 SSB/CW transceiver. I need any or all of the following: 1. schematic, 2. manual, and 3. xtal freq. formula. I will be glad to purchase. Any material loaned to me *will* be returned. Any postage expense will be reimbursed.

Ralph Irish WA8GDT
PO Box 122
Utica MI 48087

For the longest time, I have been looking for, unsuccessfully I might add, a place where I can purchase a tie bar having my callsign engraved on it. It also has a little microphone soldered onto the tie bar. A ham I know has one, but the company that made it cannot get the tie bars any longer. Any help in locating a company that sells this type of tie bar would be appreciated.

David K. Gordon WB2YUJ
PO Box 775
Holbrook NY 11741

I need a copy, or an original, of an edition of *G.E. Ham News*, circa 1952. Subject matter: the *Harmoniker*. I will pay $10.00 to the first supplier, so write first. Advance thanks.

Carl Witt W6ZTK
Box 5808
Buena Park CA 90620

CONTESTS

from page 16

Only single-operator entries qualify for awards. Several trophies, plaques, and certificates will be given as appropriate. Party contacts do not count toward the Michigan Achievement Award unless one fact about MI is communicated during the QSO. For all entries, a summary sheet is requested showing scoring and other pertinent info (name and address in block letters, and a signed declaration that all rules and regulations have been observed). MI stations include club name for combined club score. Results will be final on July 31 and will be mailed to all entries. Mailing deadline is June 30 to: Mark Shaw K8ED, 3810 Woodman, Troy MI 48084.

This will be the 20th year that hams have had their own program to publicize Michigan and its products. Just as in the past, the Governor will award Achievement Certificates to hams who take an active part in telling the world of Michigan's unlimited resources, opportunities, and advantages. Certificates are awarded on the following basis:

1. A Michigan ham submits log information and names and addresses (if possible) of 15 or more contacts made to out-of-state or DX hams with information regarding Michigan.
2. An out-of-state ham, including Canada, submits log information and names and addresses (if possible) of at least 5 MI hams who relate facts to him about MI.
3. A foreign ham, excluding Canada, submits log information and name, address, and call letters for at least one MI ham who has told him about MI.

Only QSOs made during Michigan Week, May 20-27, will be considered valid. All applications for certificates must be postmarked by July 1, 1978, and mailed to Governor William Milliken, Lansing MI 48902.

KANSAS QSO PARTY
Starts: 2000 GMT Saturday, May 20
Ends: 0200 GMT Monday, May 22

This contest is sponsored by the Central Kansas Radio Club of Salina. Work each station once per band per mode. Remember that CW and phone segments are separate bands.

EXCHANGE:

KS send RS(T) and county; others send RS(T) and state/province/country.

FREQUENCIES:

Look for CW 55 kHz up from the bottom of the band, and phone 25 kHz above the Advanced/General split. Novices try 20 kHz above the lower band limit.

SCORING:

KS stations multiply number of QSOs times sum of states, provinces, and ARRL countries worked. Others multiply total KS contacts times the number of KS counties worked (105 max.).

ENTRIES:

Include a checklist of stations worked if logs contain 100 or more QSOs. Send logs to: Robert Davis K0FPC, 1857 South 4th, Salina KS 67401. Be sure to include name and address. SASE is not required for summary of results.

SOUTH JERSEY COUNTIES AWARD (SJC)

This award is issued by the Southern Counties ARA of New Jersey for contacts with the following number of stations in each of the 8 counties in southern NJ: continental US = 3 stations/county; DX = 2 stations/county.

In lieu of contacting 2 different stations, the same station may be contacted on 2 different bands. The required counties are: Atlantic, Burlington, Camden, Cape May, Cumberland, Gloucester, Ocean, and Salem.

All contacts after Jan. 1, 1976, are valid and certificates will be issued in CW, SSB, and mixed modes. Either QSLs or GCR list (confirmed by 2 other hams) must accompany the application. Fees are $1.00 or 5 IRCs. Send applications to award manager: Louis Dvorsky N2IT, 2508 Leeds Avenue, Northfield NJ 08225.

WINDHAM COUNTY AWARD—CONNECTICUT

Submit QSL cards or statement showing log info plus statement from another amateur certifying QSOs shown. CT stations work 7 Windham county amateurs, W/VE work 5, and DX work 3. Certificates will be endorsed for specific modes or bands if desired. Gold stamp available free for anyone who works all 15 Windham County towns. Application fee is $2 for W/VE and $1 for DX. Apply to: Eastern CT ARA Awards Committee, c/o W. A. Wilson, Jr. K1OQG, RFD 1 Box 138, Pomfret Center CT 06259.

Corrections

As I am now able to see my article in print ("Computerized Global Calculations," p. 106, Dec., 77), I see one small mistake. On line 330 of the program listing, it is shown 330 C1 = ABS(L1 + I3). The lowercase letter I in I3 could make it look like the number thirteen. One person wrote to me to mention that error, but most others never mentioned it. I thank you very much for printing that article, as I have enjoyed the response.

Carl Wagar VE3EKR
Waterloo, Ontario
Canada

Pat Gowen G3IOR has pointed out that our title for his article ("Predicting OSCAR Propagation") in our November, 1977, special OSCAR issue of *73* seemed to suffer itself from anomalous propagation! The article was mainly intended to show how normal terrestrial propagation and conditions could be detected and predicted by the satellites' signal behavior, and to evidence the value of OSCAR to non-OSCAR operators when pursuing their own DX, be it HF, VHF, UHF, or auroral. We should have used his original title "Predicting Propagation by OSCAR." Also, since publication, the reference given for the AMSAT-UK Librarian, G8KME, for copies, has since changed to his new callsign, G4FYS.

John C. Burnett
Managing Editor

It is quite timely and in accord with the widening horizons of amateur radio that *73 Magazine* publishes such articles as "Inexpensive EKG Encoder" by WA3AJR (February, 1978). I enjoyed reading the article and applaud its author for his innovative approach to a hardware that would be beyond the financial reach of most hams if it had to be commercially purchased.

However, I am puzzled by Fig. 6, in which you reproduce a typical transmitted EKG tracing. It is upside down! Since the author of the article is a physician-ham, I must come to an inevitable conclusion that your illustration department has goofed. But I wonder if the author is aware of the fact that the originator of this EKG tracing is suffering from a borderline case of first-degree heart block (abnormally prolonged delay in electrical conduction through the AV node). While this type of tracing may be seen in a healthy individual, it more often is a manifestation of various forms of heart disease or the drug treatment for them.

C. S. Song, M.D. N6HF
Stockton CA

Whenever I have the time, I read *73 Magazine*, which I believe is the best amateur radio periodical.

I certainly enjoyed the article, "Inexpensive EKG Encoder," in February's issue. However, the EKG recording on p. 22 is printed upside down. The importance of this observation pertains to the fact that the proper time sequence is reversed, right to left.

If the leads are reversed, as stated in this fine article, the output will be inverted, an appearance quite different than that displayed in the article.

Thank you again for *73 Magazine*, a fine contribution to amateur radio.

Barry Bittman, M.D. WA2HCP
Bloomfield NJ

Our thanks to the 20,000 doctors who pointed this out.—Ed.

While looking over my KIM-1 RTTY article on page 68 of the February, 1978, issue of *73*, I noticed that the UART pin numbers shown in Figs. 2 and 4 are incorrect. The correct pinouts are as follows: DAV—19; XR—18; RD5—8; RD4—9; RD3—10; RD2—11; RD1—12.

The other figures appear to be correct. My apologies for not catching this sooner, and I can't explain the error!

The 3351 FIFO chip may not be available from the usual advertisers in *73* and other magazines. A possible source may be Peter Bertelli W6KS, 5262 Yost Place, San Diego CA 92109. The cost is $14.00 postpaid. Pete has been supplying the 3351 and other parts for the UT-4 as a courtesy to the RTTY fraternity. The 3351 is an MOS chip, so it should be handled accordingly.

Clifton W. Pittelkau W4CQI
Warrenton VA

... de W2NSD/1

EDITORIAL BY WAYNE GREEN

from page 136

With the 10m band plan, the Californians seem to favor putting the four Watt AM signals right down in the midst of the kilowatt sideband operators. I hope there will be no battle over this, but that the better system will win out because it turns out to benefit more people.

When I started publishing proposed 10m conversions of CB rigs in *73*, I explained that we were looking for a plan to support. The present plan, which I modestly call the *73* plan and which will probably be known as the *QST* plan in a couple of years, emerged as the hands-down winner as far as my mail is concerned. Once this was announced, the furious letters began to arrive from southern California . . . an area which had been almost completely silent before the plan was announced.

Frankly, I don't care what plan is used. My objective was to start a new area for amateurs to have fun and to try and put it in a part of a ham band where it would cause as little trouble to other amateurs as possible . . . all to keep down the wars. I suspect that the same temperament which was involved with people moving to California has a lot to do with their tendency toward getting into wars. While repeater wars may not have started in southern California, certainly the most well known of them occurred there . . . and some are still going on. They may have gone along with the 2m band plan of the rest of the country, but the southern Californians are still fighting every inch of the way. Two meter FM in Los Angeles is unlike anything you'll hear anywhere else in the world.

Is all of this bad? By no means. One of the great benefits of all this combativeness and competitiveness of that area has been the development of techniques and pioneering of new ideas which could be considered a model for others. Without all that warring, would a Gronk Network have evolved? I do hope someone will write a short history of this network, now that most of its activities have been made legal. In many ways, the hams of southern California are years ahead of other areas.

Perhaps, in their enthusiasm to try and mate sideband kilowatts and super QRP AM on the low end of 10m phone, the California group will come up with some technological advancements which will make this practical. Until then, I think I'll stick to the two meg up plan and let 'em struggle with their problems . . . problems which are going to get aggravated considerably as the sunspots perk up.

The 10m plan which looks good to me moves all CB rigs up exactly 2 MHz. This puts channel 1 on 28.965 MHz. I propose that channel 1 be used for listening and brief calling, with contacts moved up to channels 5 and higher. Channel 4, on 29.050 MHz, I propose for beacon stations. These will permit us to know instantly when and to where the band is open. Often 10m will open up and no one will notice it since everyone is listening. Beacons will help this situation.

Beacons will also help with automatic recording of propagation, which could help us better understand the workings of this band.

The 2 MHz up plan puts the low-powered channelized communications in that part of 10m which has been least used . . . above most SSB operations and below the FM and satellite work. It seems like an ideal spot.

Both Bristol and Standard are endorsing this plan. I know of no manufacturers endorsing any other plan.

WIN SOME, LOSE SOME

One of the dangers of scheduling a hamfest-auction in New Hampshire in January is snow. Sure enough, the day before the hamfest in Manchester, New Hampshire, the snow fell. It fell in great quantities, to the delight of ski areas. This did not help the hamfest, unfortunately. Here we see Lyle Kaufman showing his baluns to an admiring crowd, helped by his daughter when more obscure technical details were needed.

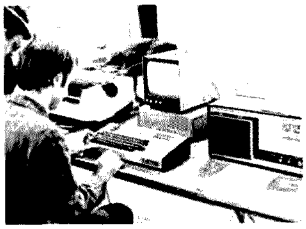

Most of the New Hampshire computer stores set up exhibits. Here we see an Aigorithmics system being demonstrated at the Microcomputers, Inc., table. Aigorithmics has a corker of a word processing system, complete with software and their own keyboard, which is specially designed for word processing.

The hamfest was organized by the Interstate Repeater Society, which would be more popular with me if the name was changed slightly to provide a different set of initials. Herman Haberman WA1NYS was the factotum and did a large part of the organizational work. Better weather next year, Herman.

SAN JOSE WAS HAMMY

The second large west coast computer show was in San Jose in early March. It was packed. In case you are still trying not to notice how much microcomputers have infiltrated into amateur radio, I might tell you that several hundred hams checked in at the *Kilobaud* booth at San Jose. And one of the major demonstrations throughout the show was the fine exhibit put on by the local RTTY group. They had a bang-up exhibit and opened a lot of microcomputer hobbyists' eyes to what amateur radio can do.

The Digital Group was wowing 'em with their Ham Board, just recently put into production. This is a single board that gives you RTTY, SSTV, and CW. The only catch is that it is designed only for the DG system; however, I'll bet it won't be long before we have some articles on using it with other systems . . . such as the TRS-80 and PET.

The Radio Shack exhibit was so packed I had to jump up and down to see who was up front showing their latest hardware, the 16K model ($889) and their new printer ($599). Commodore's PET ($795) exhibit was just as packed. I didn't find a chance to get close to either exhibit until the show was closing up on Sunday evening.

On the day after the show, Sherry and I were given a tour of the nearby PET plant, where zillions of PETs were being put together.

Commodore is not anxious to let out their production figures, but you can see from the photograph that they are turning 'em out in large numbers. Each system is burnt in for 48 hours, thus turning up about 99% of the bummers before shipment. Those few which do fail are zipped into a repair lab with a giant computer system which digs right in and checks everything out in a flash. This makes repairs take but a few minutes.

The production line has been growing rapidly as Commodore has tried to keep up with the demand. To give you an idea of the demand, several dealers were complaining that they could sell ten times as many PETs as they were being allotted.

Our next stop on the way back to New Hampshire was in Fort Worth/Dallas. There we first visited Icom and got a hands-on look at their new low band rig. Even at $1500 I predict this is going to be a sellout. Bill Mueller had the rig set up with a remote digital tuner, one which could be programmed to check pretuned channels on any band or else just tune up and down any band with the push of a button. I'll be surprised if this isn't the way all rigs will go before long.

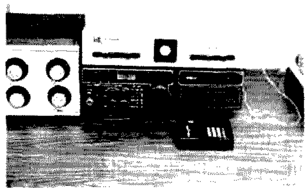

This is the IC-701 with the remote tuning control. On top of it is a HAL 6000 RTTY unit. The 701 seems to have everything a ham could want these days.

Not far from the Icom office is Art Housholder's AGL Electronics store. Bill took us down to see Art and we all had lunch at a great Mexican restaurant in the shopping plaza with AGL. Their nachos were superb . . . as were their sopaipillas. This made up for the disaster we suffered the evening before at Dallas' Baby Doe Mine Restaurant. There, after a three-hour wait in a disco lounge which just about deafened us and drove me up

the wall, we were served burnt and hardened duck. The others with us didn't make out much better, so we all left without eating. We tried to talk with the manager, but he was uninterested in our problems.

From Dallas, we drove to Fort Worth to visit Radio Shack. Say, if you can get anywhere near Ft. Worth, be sure to see the Tandy plaza complex in downtown Ft. Worth. It is amazing . . . with two 19-story buildings already finished and a 45-floor building getting started next to them. The bottom floors have a shopping plaza built in. The big centers of attraction are a giant Radio Shack store, a Tandy Telephone store, and a Tandy Computer Center. In the middle of the indoor plaza is an ice skating rink. Our host was Hy Siegel K9CCN/5, who was getting around on crutches after breaking his leg skating in the center.

Despite his crutches, Hy zipped us all over the 19-floor building, getting me in for talks with most of the top brass of the organization, showing us the lab where all new products are checked out exhaustively before being added to the Radio Shack line, and finally taking us to the TRS-80 plant not far away.

The Tandy complex is so big that they have built a special subway which goes from the ground floor of one building to a group of giant parking lots several blocks away. How many private subways have you seen? The subway goes to four different stations around the parking lots and then returns to the Tandy Center.

Here are some of the TRS-80 systems being burnt in. Radio Shack runs them for 24 hours, looking for problems, very few of which develop. This is just one part of the burn-in department, so you can't really get a count on their total production from a head count of this group.

We have both the TRS-80 and a PET in the lab at *73/Kilobaud*, so we are able to check all programs submitted for these systems before publishing them or putting them out on cassettes.

Hams keep calling up wanting to know which system I think is the best. Honestly, each system is so different

from the other that it is difficult to make any overall decision like that. The TRS-80, the PET, the Apple II, and so on are all excellent systems and they will do just about anything you could ask in computing ... if you have enough memory in them, if you have the peripherals you need, and the biggest if of all, IF you have the programs to get them to do what you want.

All of the systems available, from the under $250 KIM microcomputer right on up through the Apple II at a bit over $1,200, are fine for beginners to learn ... to learn about how computers work and to learn programming. And each of these can be sold without much of a loss, if any, if you decide to go to some other system. For the time being, none of these systems have an available S-100 interface, so the hundreds of S-100 boards can't be simply used with them. This will not be a fact for long.

In general, if you want to go to a bigger system, one based on the S-100 bus, you will have to spend more like $2,000 to $3,000. But this will be expandable for a long time to come and will work with the bulk of the specialized boards being made... for music, for art, for controlling things, for connecting to the phone, etc.

You'll begin to understand more about all this if you start reading *Kilobaud*. This is the only microcomputer magazine being published for the beginners in the field.

WESTLINK LIVES

Every week Bill Hendershot produces a five- to ten-minute ham news broadcast. This is put on tape cassettes and mailed to the subscribers. The tapes are then played over many of the repeaters around the country to bring radio amateurs up to date on what is going on.

Bill generally shies away from controversy in these broadcasts. He gets his news from the FCC, from *HRR*, and other sources. In many cases, he calls the people making the news and tapes his interviews with them.

Bill's WESTLINK programs have been one of the better ways to keep up with the continuing circus of Rick Cooper, an effort which has cost Bill a lot of long distance phone calls. There is some new phase to the Cooper epic every week.

Repeater groups interested in keeping their members up to date on the news of amateur radio should get in touch with Bill. Write to WESTLINK, 12731 Rajah Street, Sylmar CA 91342, for details and costs.

The tapes are professionally done and are quite legal to play over the air, either on the low bands or over a repeater.

EQUIPMENT COSTS GOING UP

Since the FCC seems to be making no provisions for reimbursing manufacturers for the extra cost of designing ham equipment according to the new regulations, it is a safe bet that amateurs will be the ones to pick up the tab.

In addition to the higher costs of equipment, we will also have to foot the costs of dealers keeping and reporting the records they will have to manage. This probably won't amount to more than $4 or $5 per unit, but it will mount up in the long run.

How is a dealer to know if the license being shown by a purchaser is a legitimate license? The process will have to be lengthy and costly to make sure that the dealer does not get in trouble by selling ham gear to someone who is actually not a ham.

Tell me... is this what you want to happen? Are you willing to foot this bill just because the FCC doesn't have the guts to tackle the CB and HFer problem directly?

YAESU PREVIEW

The inside scoop is that Yaesu has two new VHF transceivers coming out. These should be on hand by summer. One is for six meters and the other for two. These will have digital plus analog displays, be all mode (including SSB), operate on the standard splits of 1 MHz on six meters and 600 kHz on two meters, and have a new type of noise blanker which is said to really work, optional fixed channels, ac/dc operation, optional frequency memory, semi-break-in CW with sidetone, programmable tone burst generator, discriminator meter... etc. For CW DX fans, there is a CW filter option for the six meter rig.

MORE HELP WANTED

Despite the recent addition to our staff of two computer technicians, a computer programmer or two, a ham technician, a couple of marketing people, more ad people, etc., we are still unable to keep up with the growth of the business in several aspects.

One major need is for an experienced ham with considerable background and the ability to write. This would be an assistant editor position for *73* which would include handling the new products section of the magazine, screening articles for publication, helping with the testing of new products and writing them up, etc.

The usual resumé is not relevant to this work—we need to know about your hamming background, what articles you've had published, etc. Write to Wayne Green, 73, Inc., Peterborough NH 03458.

Chain Letter Petition in Support of Amateur Radio

Before doing anything else, make at least five photocopies of this petition and give or send these copies to friends, neighbors, radio club members, hams you have contacted, etc. They do not have to be radio amateurs, but just people who realize the importance to the community, to our country, and to the world of amateur radio. We don't want to lose our bands to CBers and a dictatorship.

The Petition

We, the undersigned, being American citizens, do hereby indicate our support of amateur radio and our opposition to any efforts to destroy this valuable service. Since radio amateurs have been directly responsible for developing and pioneering virtually every communications technique in use today, furnish an invaluable source of engineers and technicians for our government and industry, and furnish efficient communications during any emergencies, we cannot afford to let this important resource be wiped out.

Name__________ Address__________ City______ State____ Zip______

Name__________ Address__________ City______ State____ Zip______

Name__________ Address__________ City______ State____ Zip______

Name__________ Address__________ City______ State____ Zip______

Name__________ Address__________ City______ State____ Zip______

Support this political action to preserve amateur radio. Send your petition to:
Wayne Green
73 Magazine, Peterborough NH 03458

73/5/78

propagation

by
J. H. Nelson

EASTERN UNITED STATES TO:

GMT:	00	02	04	06	08	10	12	14	16	18	20	22
ALASKA	14	14	7	7	7	7	7	7	7	7	7	7A
ARGENTINA	14	14	14	7	7	7	14	14	14A	21	21	14A
AUSTRALIA	14	14	7B	7B	7B	7	7	7	7	7	14	14
CANAL ZONE	14	14	7A	7	7	7	7	14	14	14	14	14A
ENGLAND	7A	7	7	7	7	7	14	14	14	14	14	14
HAWAII	14	14	7B	7B	7	7	7	7	7A	14	14	14
INDIA	7	7B	7B	7B	7B	7B	14	14	14	14	14	7
JAPAN	14	7A	7B	7	7	7	7	7	7	7	7A	14
MEXICO	14	14	7	7	7	7	7	7A	14	14	14	14
PHILIPPINES	14	14	7B	7B	7B	7B	7B	7	7	7	14B	14
PUERTO RICO	14	7A	7	7	7	7	7	7A	14	14	14	14
SOUTH AFRICA	7B	7	3A	7	7B	14B	14	14	14	21	14	14B
U. S. S. R.	7	7	7	7	7	7	7A	14	14	14	14	7A
WEST COAST	14	14	7A	7	7	7	7	14	14	14	14	14

CENTRAL UNITED STATES TO:

GMT:	00	02	04	06	08	10	12	14	16	18	20	22
ALASKA	14	14	14	7	7	7	7	7	7	7	7	14
ARGENTINA	14	14	14	7	7	7	14	14	14	14	14A	21
AUSTRALIA	14	14	14	7B	7B	7	7	7	7	7	14	14
CANAL ZONE	14A	14	7A	7	7	7	7	14	14	14	14	14A
ENGLAND	7A	7	7	7	7	7	7	7A	14	14	14	14
HAWAII	14	14	7A	7B	7	7	7	7	14	14	14	14
INDIA	7	7B	7B	7B	7B	7B	7B	7B	14	14	14	7A
JAPAN	14	14	14	7B	7	7	7	7	7	7	7A	14
MEXICO	14	14	7	7	7	7	7	7	7	14	14	14
PHILIPPINES	14	14	14	7B	7B	7B	7B	7	7	7	14B	14
PUERTO RICO	14	14	7	7	7	7	14	14	14	14	14	14
SOUTH AFRICA	7B	7	3A	7	7B	7B	14	14	14	14	14	14B
U. S. S. R.	7	7	7	7	7	7	7	7	7A	14	14	7A

WESTERN UNITED STATES TO:

GMT:	00	02	04	06	08	10	12	14	16	18	20	22
ALASKA	7A	14	7A	7	7	7	7	7	7	7	7	7A
ARGENTINA	14A	14	14	7	7	7	7	14	14	14	14A	21
AUSTRALIA	14A	21	21	14	14	7	7	7	7	7	14	14A
CANAL ZONE	14A	14	14	7	7	7	7	14	14	14	14	14
ENGLAND	7A	7B	7	7	7	7	7B	7B	7A	14	14	14
HAWAII	14A	21	14	14	7	7	7	7	14	14	14	14
INDIA	14	14	14	7B	7B	7B	7B	7B	7	7	7	7A
JAPAN	14	14	14	7A	7B	7	7	7	7	7	14	14
MEXICO	14	14	14	7	7	7	7	7	14	14	14	14
PHILIPPINES	14	14	14	14	7B	7B	7B	7	7	14B	14	14
PUERTO RICO	14	14	7A	7	7	7	7	14	14	14	14	14
SOUTH AFRICA	7B	7B	3A	7	7B	7B	7B	7B	14B	14	14	14B
U. S. S. R.	7	7	7	7	7	7	7	7	14	14	7	7
EAST COAST	14	14	7A	7	7	7	7	14	14	14	14	14

A = Next higher frequency may also be useful
B = Difficult circuit this period
F = Fair
G = Good
P = Poor

may

sun	mon	tue	wed	thu	fri	sat
	1 G	2 F	3 F	4 P	5 P	6 F
7 G	8 G	9 G	10 F	11 G	12 G	13 G
14 G	15 G	16 G	17 G	18 G	19 G	20 F
21 F	22 P	23 P	24 P	25 F	26 G	27 G
28 G	29 G	30 G	31 G			

June 1978 $2.00

Antennas!

73 Magazine for Radio Amateurs

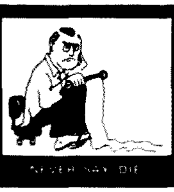

...de W2NSD/1

EDITORIAL BY WAYNE GREEN

NAIVE IDEAS

It's been a long time since I've editorialized about my naive and idealistic ideas of what amateur radio should be like. Come with me to dream world.

We have several difficulties with amateur radio, and most of them stem from lousy rules and a lack of enforcement by the FCC. I get a bit frustrated when I see petitions being fed into the FCC hopper every time some amateur or club gets provoked by something that has happened. The first knee-jerk reaction is to demand a law against the bad thing.

We have TVI? Pass a law against it. We have jamming of nets? Pass a law. We have crowded bands? Pass a law. Fiddlesticks and bah humbug.

Any person who takes any kind of objective look at the use of laws to solve problems has to come to the conclusion that this is one of the worst ways to try and make things better. And this holds true in spades when it comes to the FCC. It takes them years to act on a proposal. In ten times out of nine, the problem is long gone by the time the rule comes out, and when it does emerge, it creates a whole new bunch of problems never envisioned by the idiots who demanded the law in the first place.

Since the bulk of our rule changes have been the result of the ARRL demanding them, I point my finger toward Newington as the source of much of our miseries. Yes, I know, there goes Wayne, trying to get more circulation by heaping abuse on the poor underpaid headquarters gang . . . all beloved by hundreds of thousands of loyal members.

Let's not rake over old coals the incredibly stupid rules we have had to endure at various times. One of these days I'll write at length for newcomers to acquaint them with some of the blundering history of amateur radio legislation. They won't believe it.

The entry into amateur radio has been made painful by three things—the code exam, the theory exam, and the FCC administration of these exams. Few amateurs have been through a painless FCC exam . . . it is a trauma for almost everyone. I don't think this is necessary. I would prefer to set up a whole new system, one which is not all that far from where we are right now.

A few years ago, I made a survey of the ham clubs to find out which were running training classes for newcomers. At that time, there were a maximum of 50 clubs with such classes in the country. I set about getting clubs to run classes by writing editorials and providing the best training aids which had ever been developed for making it easy for beginners—the *73* study guides and tapes. Today there are over 2000 ham clubs giving classes, and amateur radio is growing as never before.

The next step I'd like to see is the turning over of the licensing exams to clubs. We had problems with our Conditional class of ham license because it was set up with only one examiner. I'd like to see the clubs administer the license exams with a minimum of three licensed ham proctors present. You can have funny business with one chap, perhaps even with two, but with three in on it, there is too much likelihood for someone to spill the beans. I suggest that where someone blows the whistle and there is a good likelihood of mischief, the club should lose its licensing authority.

The club handling of license exams would not only take a lot of the pressure off those taking the tests, but it would also make it far less expensive for newcomers since they would not have to miss a day's work and drive to a city to take the exams. And think of what this would save the FCC in administration costs!

Okay for step one. Now, about our subbands. In this case, I'd like to see the FCC open all ham bands for any emission and let us draw up our own uses for the bands. It would be chaos, right?

I doubt it. We have gone through just such situations in the past, all without FCC rules, and we have come through every time with honor. One of the more recent major changes was from AM to SSB on the low bands. The two modes were not compatible, so there were often skirmishes between them. But, early in the game, a detente was achieved where the SSB gang started from the top of the 20m phone band and the AM from the bottom, thus keeping relatively out of each other's hair. It worked.

We called it a gentlemen's agreement. Sure, we had some hams who most definitely were not gentlemen. None of us who heard W2OY were inclined to think of him as a gentleman. But the good guys won out over the bad guys and eventually SSB took over because it was better.

We had a similar problem when repeaters started up. There were repeater wars at first and screams for the FCC to do something. By the time the FCC got something done, the repeater groups had organized into repeater councils, set up frequency coordinating committees, and had everything well in hand. Then the FCC used a sledgehammer to kill the fly. We are still getting out from under the mess the FCC made of that one . . . with the great help of the ARRL.

To facilitate the setting up of gentlemen's agreements, I suggest we have the interested ham clubs send representatives—two each—to a national ham conference, probably every two years. Funding this pilgrimage and the running of ham classes would be major functions of clubs.

The conference would break up into working groups to study proposed changes in band usage, bringing their committee reports to the whole body for a vote. The clubs would then see that these new agreements were observed by hams in their area, club members or not, using peer pressure to get compliance.

Would this mean that small groups interested in specialized modes would get the shaft? Not likely, for we have seen in every case that the repeater councils have really over-protected special interests. When setting up repeater channels, they leave more frequency space for CW, SSB, RTTY, and other groups than is really needed. Hams are

73 Magazine is published monthly by 73, Inc., Peterborough NH 03458. Subscription rates in the U.S. and Canada are $15 for one year, $26 for two years, and $36 for three years. Outside the U.S. and Canada, write for rates. Second class postage paid at Peterborough NH 03458 and at additional mailing offices. Publication No. 700420. Phone: 603-924-3873. Entire contents copyright 1978 by 73, Inc. INCLUDE OLD ADDRESS AND ZIP CODE WITH ADDRESS CHANGE NOTIFICATION. Microfilm edition—University Microfilm, Ann Arbor MI 48106.

fair people and in groups they are usually able to overcome self-interest and be helpful and considerate of others. I think that we might see a generation of experimentation and pioneering far beyond anything we have ever seen before if such a scheme could be implemented.

The number of anarchists in our midst is small and I think we can handle them. I think we can do it much better than we have so far because the normal response to a problem at present is to call the FCC for help instead of doing it ourselves. Was it really necessary to arrest and imprison the two hams in New Orleans who, for a lark, spent almost a year driving the repeater users bananas with foul language and interference? Wouldn't the shame of exposure to the club members and other local hams have been enough to solve the problem?

The FCC says it doesn't have enough money to do this, to do that, and I say we can do everything they are doing for us and a lot more, all at no expense to them whatever. For a couple of bucks a license, we could hire a commercial firm to set up a computer and issue ham tickets, with a copy to the FCC for their files. That way we could have special station calls, repeater calls, and anything else we felt like having and agreed among ourselves we needed. Special licenses cost more to process, so we charge more. Big deal. A $100 repeater license would be well worth the cost to most clubs . . . it would be a badge of pride. And $100 for a special call for a fair or big event would be peanuts.

Convinced?

Then start petitioning the FCC for the changes, and who knows, by the time our children are asking us to come babysit their kids, we might have some better rules. That is, providing there is any ham radio by then.

A NEW PROSPECT FOR SURVIVAL

Could the United States continue telecommunications on an international basis if it withdrew from the International Telecommunications Union? There would be massive problems, but it is possible that the U.S. could go its own way. This could destroy the ITU, so the prospect is not a happy one.

Yet that is what seems to be seriously under consideration as the U.S. heads into the WARC conferences at the ITU in 1979. Many of the other services are as concerned as amateurs over the possible losses of frequencies, and rightly so.

The present shortwave allocations were set up primarily at an ITU conference in Atlantic City in 1947. At that time, few countries had any extensive use for the shortwaves, so the major European countries and the U.S. grabbed the lion's share of them. This was okay for a while, but then the emerging nations found that they, too, had desperate needs for radio frequencies, few of which were available. By 1959, the major powers sensed that they had a losing battle on their hands, so, by the skin of their teeth, they voted to put off shortwave reallocations until the next conference. This was supposed to come in 1969.

When the African and Asian emerging nations took over control of the ITU in the early 60s, the major powers still had enough clout to prevent the 1969 conference. Small conferences in 1971 and 1973 on satellite frequency allocations and marine radio allocations made it clear that the new African countries had the ball, and these conferences were unmitigated disasters for the big countries. The small countries were now powerful enough to force the shortwave conference for 1979 and the big powers had no further way to stop them.

More and more I hear people whom I respect saying the unsayable—that the U.S. may well pull out of the ITU, that the one nation, one vote concept is no longer possible to accept. We've proven pretty well that this concept doesn't work with the UN. Why should a small African country with one ham (a white European visitor) and a need for maybe three broadcast radio channels have an equal vote with the U.S.? One reason is that no one has been able to come up with a better solution to the need for international agreements. If the U.S. had 10,000 votes and the African country one, why should the African country bother to come?

The U.S. worked out a solution to this same situation when it was formed. They set up *two* groups of representatives, one representing the political areas (the Senate) and one representing the proportions of the population (the House). Perhaps if the UN and its subbranch, the ITU, were rebuilt as a world democracy, the system could be made to work.

If the U.S. and several other major powers pull out of the ITU (say, does that mean we would have to pull out of the UN also?), it could bring this to a head.

WARC AND CB

One of the information bulletins being circulated to those participating in WARC discusses the hate between CB and amateur radio in Great Britain and cites as one of the primary causes several articles in *QST*. "Matters were not helped by the American amateur magazine '*QST*,' which is read by many English amateurs, printing several of the most anti-CB news stories that it could find each month."

SWISS WARC RECOMMENDATIONS

The Swiss group has recommended that the amateur 430-432 and 438-440 MHz bands be replaced with a mobile service. They also want to make 41-68 MHz into a mobile band (not amateur), as they do 174-235 MHz (whoops, there goes 220!).

BRITISH WARC PROPOSALS

Britain wants to double all shortwave broadcasting bands below 20 MHz; they also want an additional broadcasting band between 12-15 MHz (how about 14 MHz, fellas?). Amateurs should, they feel, be "relocated" from the 7.1-7.3 MHz band, but no suggestions are made for another home. They also propose a cut in the 220 MHz band, removing 220-223 MHz from amateur service.

THANKS TO MICHIGAN

The idea for the petition which ran in the February issue of *73* came from a group in Michigan who sent in such a petition to me. I dropped them a line thanking them for the idea and put it quickly into motion. The response to the petition has been gratifying, as I've mentioned. The stack of petitions is now almost a foot high, perhaps well over a thousand of them, most with five to fifty names.

Solidarity like this impresses even the obviously biased FCC Commissioners. I sure wish that I had had this pile of petitions when the oral hearing on amplifiers was held last November . . . the Commissioners might have listened to the amateur arguments a little more closely.

Cooper is still hard at work, though his life is complicated by the need to dodge a California court which charges fraud. Cooper is a wily chap and so far has been one step ahead of the pack at every turn.

WHY PETITIONS WORK

A letter from WA2RNG groused about my wasting space in *73* for a petition—after all, they don't work . . . everyone knows that.

Oh yeah?

I'm not putting RNG down, for I used to think that petitions were a waste of time and effort. That was before I did any groundwork in Washington, the place where politics is king. It didn't take long nosing around Washington, seeing how our government works, to discover that there is magic in a pile of petitions. Those names mean people and people mean votes, and votes mean congressional interest and enthusiasm, and that means action . . . and that's a fact.

The FCC, like any other arm of our government, is sensitive and responsive to political pressures, so they do perk up when someone comes in and lays a pile of petitions in front of them. They start hearing more clearly. If ARRL counsel Booth had laid a pile of petitions on the desks of the Commissioners instead of an endless monologue, we might still be able to buy ham amplifiers with a 10m band on them.

When we testified on the need for repeater rule changes in 1974, we laid a big pile of petitions on the Commissioners' desks and we got just about every rule change we asked for. Sure, it took months to get those petitions signed. We spent a large part of the *73* booth space and personnel at hamfests and conventions on getting petitions signed during 1973, and we put on an excellent presentation. The package did the job.

STOP COOPER

In addition to several thousand signatures on our petitions from hams and their friends, quite a bunch have been coming in from CBers. Surprised? Typical is a letter from Don Sweat of Crystal Springs REACT in San Mateo, California. He says that he and the 30 members of the REACT team are studying for their ham tickets and they are going all out to stop Cooper.

The biggest bunch of signatures received so far was sent in by Harold Wallich WØNAZ of Missouri—330 signatures! Congratulations for the hard work, Harold . . . those petitions are an impressive sight.

LEAGUE BLACKMAILS BEGINNERS

When I say the League, I am referring only to HQ in Newington, not the thousands of members, and there is a very distinct difference. The members are not consulted by HQ on anything (when was the last poll you've seen in *QST* asking your opinion?), so members should not feel defensive about things over which

they have absolutely no control.

So what about all this blackmail business? I am in possession of a letter from C.J. Harris WB2CHO, the Clubs and Training Manager of ARRL, addressed to club instructors. In this letter C.J. says, "We are changing our former procedure of sending out large quantities of Operating Aids with this package (FCC 610 forms). Instead, your students will receive these operating aids when they sign and return the enclosed petition in support of the effort to expand the Novice 80 meter band."

Now, fellow ARRL member, and I've been a member of the League for 40 years now, have I exaggerated in any way when I call that blackmail? When the FCC people find that the League is forcing hams to sign a petition in exchange for goodies, what possible value do you think they will put on names gotten through such bribery and coercion? I wonder if anyone at the League thought this through and realized that by forcing people to sign a petition, they will effectively shoot down their Novice band expansion scheme. Or did they do this on purpose so it would merely look as if they were behind the band changes?

If you consider the above as anti-ARRL, what would you suggest as my response to the League letter to clubs? Would you, if you were editing *73*, just keep quiet about it? Do you feel that amateurs do not have a right to know what the League is doing?

Yes, I know that there are a few amateurs who are so pro-ARRL that they want every bad thing that goes on at the League to be kept secret. They feel that even the slightest critical mention of the ARRL is a personal attack on them. When some fellow amateur tries to get them to look at facts, they just get mad. Believe me, it takes great courage or great stupidity (your choice) to dare to say anything critical about the League, no matter how constructive the criticism. There are no rewards for those who speak out.

And now the good news: The percentage of hams who react emotionally at any critical mention of the League is small today. Today the majority of amateurs try to be realistic about the ARRL. They are frustrated by some of the things the League is doing or not doing, but they don't know what to do about it. They find it difficult to try and come up with ideas at club meetings because there are still a lot of "loyal" League members, with "loyal" meaning think no evil, permit no evil to be spoken, etc. It is a lot easier to blindly believe in the League than to live with the knowledge that we are essentially unprotected and at the mercy of forces over which we have little control.

MORE DECEPTION?

Speaking of C.J. Harris of the ARRL, you might, for laughs, check out the March-April issue of *Elementary Electronics*. In there you'll find a nice article on getting started in amateur radio, which is all well and good. However, the article is one long sales pitch for ARRL products, Including their terrible code course, and no mention whatever of Harris being employed by the ARRL. Shame on *Elementary Electronics* and the ARRL for this deception.

The fact is that I was flipping through the magazine and spied the article. Since any objective evaluation of code courses would list the *73* tapes first, I looked for the reference ... none! Hmmm ... only the ARRL was pushed ... hmmm some more. Then I looked at the author of the article and discovered that the manufacturer (ARRL) had written the article to sell the product. I wonder if I should start writing articles for other magazines telling newcomers how great the *73* cassettes are?

HAMS ARE NOT EXPERIMENTING

One of the club newsletters recently had quite a long diatribe on how most hams are not participating in pioneering efforts. This is true... guilty, but with an explanation.

We would have a lot more breakthroughs in communications techniques by amateurs if the FCC did not interfere at every turn ... I think that is obvious. By dampening the climate for experimentation and pioneering, the FCC has thrown a pall over the entire amateur radio community. Pioneering is a work of enthusiasm ... it is fun. When you have a bureaucracy sitting on top of you, it is difficult to have fun. Not many amateurs want to fight the FCC, nor do they want to have to conduct their experiments clandestinely. The end result is little in the way of progress as compared to what we could have if we were free of the deadening FCC yoke.

If amateurs were encouraged to experiment, we would find more and more articles in *73* on these ideas, and these in turn would spark more enthusiasm and ideas. Enthusiasm builds more enthusiasm just as gloom develops more gloom.

No, I think it is useless to castigate amateurs for not pioneering or to try and force them to do things on the basis of shame. Amateurs will work best if they are having fun and can brag a lot... then they spread their contagious enthusiasm. You'll get a thousand times the end result from an article on some new invention that is fun than you will from an article casting shame on those who are not experimenting.

Ham radio is a hobby, it is for fun. When it ceases to be fun, it will go away. We saw clearly what happened in 1963 when "incentive licensing" proposals by the League took the fun out of hamming—tens of thousands of amateurs went off the air and dropped out... permanently. The growth of the hobby stopped, invention just about stopped, and sales of ham gear dropped to about one-seventh what they had been, driving over 600 ham stores out of business and doing in all of the large manufacturers.

HAM PIONEERING

For as long as I can remember (and unfortunately I can remember a very long time), the FCC has been doing just about all it could to violate one of its most important rules—Part 97.1c, the one and only regulation which specifically outlines the responsibilities of the FCC. This regulation says the FCC shall follow the principle of: "Encouragement and improvement of the amateur service through rules which provide for advancing skills in both the communication and technical phases of the art."

When the FCC denies amateur requests for special temporary authority (STA) to experiment with new techniques and ideas, and does this on a continuing basis, then they are clearly in violation of their own rules.

Am I making a big thing out of nothing? Here is where my long memory comes into play. I remember all too clearly the years of pressure it took for amateurs to fight both the FCC and the ARRL to get RTTY permitted on the low bands. In the early days, the FCC forced repeaters to close down and it took years to get them accepted by the FCC.

Many technical developments have been stopped cold because the FCC insisted that amateurs not transmit any type of signals their monitoring stations couldn't copy. How can you pioneer anything under that restriction? You can't!

The FCC is still at it, and if you doubt that, just ask any amateur who has requested an STA for testing ASCII on the ham bands. There is no known reason why amateurs should not be permitted to go ahead and use ASCII and start their development of systems using this modern technique. How can amateurs provide leadership to industry if they are hamstrung (pardon) at every turn by the FCC ... in violation of their own regulations?

20 KHZ SPLIT PIONEERED

There are growing rumors of an attempt to change the historic 30 kHz two meter repeater channel split to 20 kHz. Since nobody asked my opinion of this, I feel free to comment.

Shades of eight years ago! There was a strong movement way back in the early days of repeaters to change to 20 kHz splits. Come to think of it, the chap who was at the heart of this movement then is, oddly enough, now living where the new thrust is taking place. Is this a coincidence?

To recap history briefly: The first repeater channels were set up on 60 kHz splits. This was in the early 60s and most hams were using hand-me-down police and taxi units set up for wideband (30 kHz) operation. Narrowband rules for the land mobile services had obsoleted a lot of FM equipment, which promptly fell into ham hands at a fraction of its previous cost. The wideband channels dictated the 60 kHz splits between repeaters.

Once the 60 kHz channels filled up, the pressure increased to shift to narrowband FM, a mode which, by the way, was pioneered by a ham back in the late 40s. As FMers narrowed their rigs down, it was possible to sandwich in more repeaters on the 30 kHz "splits."

In 1969, we brought things to a head by packing *73* with FM and repeater articles, running a series of FM symposiums around the country, and putting out an *FM Repeater Newsletter*. This helped get the country organized into using a common set of channels. Before this, only a handful of repeaters were set up on the now standard 600 kHz spacing, thus making the use of crystal-controlled rigs a problem. Along in 1970-71, the pressures forced repeater groups to get together and swap channels so they could move to 600 kHz spacing. With few exceptions, this is now the rule.

When all of the 146 MHz repeater channels in New York filled up (147 MHz was at that time only open to General class and above), the first of the 15 kHz "splinter" channels was tried. It worked, after a fashion, for some users. It became quickly apparent that either the state of the art of making two meter FM receivers was going to have to progress or else 15

kHz would fail. Designers testified that it was just too — which would act as an ordinary 2m repeater most of the time — fellows. How did the "ranger" work? — VTR—PRESENT AND FUTURE

LETTERS

HAMBASSADORS

Your October, 1977, editorial comment posed the appropriate question, "Can the QCWA save amateur radio?" This timely inquiry has stuck in my craw ever since, and my curiosity has been building steadily. It's about time I wrote to see if anyone "answered the call."

Well? Haven't there been any encouraging results so far (see page 35 of the April, 1978, issue of *73*, column 1)? If there have been, they haven't been reported to us. I'd like to think that we can trust the QCWA to bear the full burden of supporting amateur radio by becoming "hambassadors" to developing countries (and leave it at that). But life has taught me not to count on *anything*—so I'd like to see what the average amateur can do to help.

The idea of ham ambassadors ("hambassadors" is the nickname I came up with) is great! It's a good idea to get them from the QCWA, the people whose knowledge of amateur radio is probably more than sufficient to get the job done right. It's also nice that since many of the QCWA members travel a lot anyway as part of their jobs, there would be no cost to anyone for the great service they would provide to amateur radio.

But—what can we "small fry" do? What can the average ham do to help keep amateur radio off the butcher's block at WARC '79? This is obviously a moot question (perhaps a good subject for an upcoming editorial?). The only thing that I can think of to help get the job done would be to provide the means by which any "qualified" amateur could become a "hambassador." After all, I would assume that not *all* of the QCWA members have expense accounts and make regular business trips to foreign countries. There may be many of these pioneers and innovators who would be itching to go and do something to benefit our hobby, but who don't have the means. Furthermore, there are probably those hams who are fully qualified to take the responsibility who are not QCWA members, and also lack the means to make this significant move to benefit our hobby. Anything we can do in the way of support would probably be much needed and greatly appreciated.

My first suggestion is to set up a fund from which "hambassadors" could draw to cover expenses incurred as a result of their "mission." Donations would come from the "average" hams all over the U.S., and money received would be controlled by a responsible administrator who would answer to a board or panel of trustees. These trustees would be responsible for determining who is or is not eligible for the job of "hambassador," and they would also act as coordinators, making sure each country is covered and following up on the results of each expedition.

My next suggestion is that whatever we do, let's do it fast! Let's not waste a bunch of time debating about it and wrap ourselves up in the politics of the thing. It's late in the game, and whatever any of us can do should be done immediately if we want to see amateur radio remain like it is instead of become an all-VHF/UHF/X-band affair!

Let's pool our thoughts, come up with a plan, and put it into action before another six months slips through our fingers!

Timothy M. Mrva WD8QLB
Elsie MI

Well, Timothy, the answer to your question is that I have not heard of anyone, QCWA or other, setting out to contact those countries which will decide on our ham bands at Geneva next year. The small African countries are the ones which will be able to vote whatever frequency allocations they desire. With one vote per country and few, if any, friends in Africa, how far do you think an "American" hobby is going to get as far as keeping incredibly valuable shortwave frequencies is concerned? When we lost 237,240 MHz of previously allocated satellite ham frequencies at the ITU satellite conference in 1971, it was clear that the handwriting was on the wall. That's right, we lost every single satellite frequency we had allocated above 450 MHz at that conference ... that was a permanent loss. Then, when the same disaster fell on the maritime frequency users at the 1973 ITU conference, again brought about by the solid bloc voting of small African countries, it was even clearer. These shortwave frequencies are very valuable, whether for use by the country or for lease to other users (each channel is said to be worth about $10 million). The likelihood of these African countries being kind enough to voluntarily give up something they can rent for cold, hard cash so a bunch of Americans can play is not something I care to bet a lot on ... remembering how popular the U.S. is with most African nations.

As I said in the October editorial, I think that these countries could be encouraged to save the ham bands for hams if someone were to go and visit the heads of the countries and acquaint them with the tremendous value amateur radio could have for their countries ... a fact not one of them is familiar with.

Hambassadors might swing the difference, if we had any. As far as collecting money for such an effort goes, there isn't time to do this through any general collection from amateurs ... that takes much too long. With the ARRL keeping mum on the whole situation, most amateurs would seize upon this as an excuse to let someone else pay to try and save amateur radio. After all, if there were any serious danger, the League would do something about it ... right? Sure ... just like they did about our satellite frequencies when they went to Geneva to represent us and lost every single kilohertz we had above 450 MHz—237,240 megahertz lost ... forever.

The only other possibility is that the ham manufacturers may stop their political infighting and collect enough money to field some hambassadors. Right now some of the U.S. manufacturers seem to be more interested in battling Japanese ham importers than looking to next year at Geneva. The chaps running the importing firms are mostly old-time U.S. hams, and seem to be alone in their desire to do something about the situation. Weird.

If the ham industry were to immediately increase equipment prices by about 3%, they could gather about $250,000 a month from this "tax" and use it to get some hambassadors into the field right away. Most of us pay a lot more than that in sales taxes (except in New Hampshire, where we have no sales taxes). This way, all active hams could pay for the hambassador program. I've made this suggestion to the industry and asked that the firms get together at Dayton and stop the infighting ... and try the 3% hambassador funding concept. Will it happen? Read next month and rejoice or weep.

Remember, I could be wrong about all this ... but what if I am right?—Wayne.

QRPp?

It's my belief that any ham using more than 20 Watts on the bands today would use a sledgehammer to kill flies.

The fact is, there's not a country on this globe too remote to be accessible to a station running a half Watt and a dipole (under proper conditions, of course). Yet, our frequencies quake with shrieking thousand-watters beam-boosted to erp levels of 10^4 times that amount.

How come? Perhaps it's another manifestation of the same syndrome which, until recently, cluttered our highways with 500-HP, gas-guzzling behemoths. At any rate, the ad men behind this power tripping in hamdom surely deserve their due. Their campaign may go down as one of the most successful deceptions of an intelligent group of individualists ever perpetrated. Happily, though, it looks like "megawatt mania" has nearly run its course.

It used to be that the guy on the other end of the QSO came right out and told you that he had a gallon, a California kW, or a legal limit and then some. But things have changed. Notice how often now you hear, "rig here 900 Watts." Come on, fellas, even the most mathematically inept of our ranks recognize that as pretty darn close to the big K. But it does show where it's all headed.

The tide is turning to low power. But there will be the diehards, those few who may never fully appreciate just how boorish it is to plop down a big fat U.S. double gallon on a choice frequency during a DX contest and start calling, "CQ test." It simply salves one W's ego while forcing many foreign stations into the background instead of allowing them to efficiently work the hordes of other American hams anxiously waiting for a QSO. But then, I suppose the DX understands ... after all, the specter of the ugly American is nothing new.

Once you experience the warm respect you receive from DX stations when they learn you're running QRPp, you

Continued on page 45

New Products

LEGALIZING BUSINESS TALK

Do you sometimes get a little fed up with some of the fellows on the repeater who push the rules with calls to their office? They may not actually talk business, but you know the call is business oriented. Then there are the gray areas . . . like calling ahead to order a pizza . . . a restaurant reservation. Sure, it's idiotic to consider these a business use of a repeater, but then we've gotten all sorts of contradictory input from the FCC as to what is or is not "legal." The result is that many amateurs tend to be excessively conservative.

Wouldn't you like to have a repeater where you could talk business if you wanted to? Where you wouldn't have to worry about whether some use was legal or not? Where there would be no damned nitpickers to rain on your parade? Well, it's there and very few people know about it.

Old-timers, sitting there rocking and combing their beards, may remember the halcyon days of radio and the first CB channels . . . up at 460 MHz. It was a good place for CB, and just think of the headaches the FCC could have saved if they had listened to their men who advised against opening the 11m band. This "Class A" Citizens Band never really made it because there wasn't any decent yet low-priced equipment. Well, the remnants of this early band are still there and not a few amateur groups have been taking advantage of this to set up repeaters, complete with autopatch.

The beauty of these channels—and there are eight of them—is that they are not much used in many areas . . . and you can use them for business, if you want.—Wayne.

STANDARD GMR-1 BASE/MOBILE TRANSCEIVER

With the same capabilities for FM simplex/repeater operation as on the 70 cm amateur band, plus such additional advantages as being able to make business calls via autopatch facilities and unlicensed members of your family being able to legally operate, the 460 MHz range General Mobile Radio Service, formerly Class A CB, offers an attractive alternative to amateurs, particularly in the many parts of the country where amateur band repeater operation is already at the saturation point.

In practice, the GMRS provides pretty much the type of operation envisioned for the proposed Communicator class amateur license—with certain pluses.

Operated in essentially the same fashion as an amateur band repeater, a GMRS machine could provide a logical, legal, and very useful extension of any group's communications capabilities. And with its wider range of authorized communications and eight frequency pairs of increasingly scarce spectrum space, the General Mobile Radio Service should not be overlooked by existing or potential amateur repeater organizations with an eye to the future.

Now Standard Communications has entered the GMRS field with the GMR-1, a six-Watt, two-channel FM transceiver for operation in the 462-468 MHz range. The GMR-1 can be used as a mobile or for base station operation with the addition of a suitable 12-volt supply such as Standard's model 12/120-GMR, which includes a built-in speaker.

With a pair of GMR-1s, you can enjoy the same simplex and repeater coverage as you would have on the 70 cm amateur band and, additionally, carry on business communications including autopatch phone calls. However, the biggest advantage to most amateurs will likely be the provision that enables family members and others to operate without being individually licensed.

Priced at under $400, the GMR-1 offers amateurs the opportunity to expand their communications into a new and exciting area that complements their present VHF/UHF capabilities. Full details on the GMR-1 and the General Mobile Radio Service are available from the PerCom Sales Manager, *Standard Communications Corp., PO Box 92151, Los Angeles CA 90009.*

Morgan Godwin W4WFL
Peterborough NH

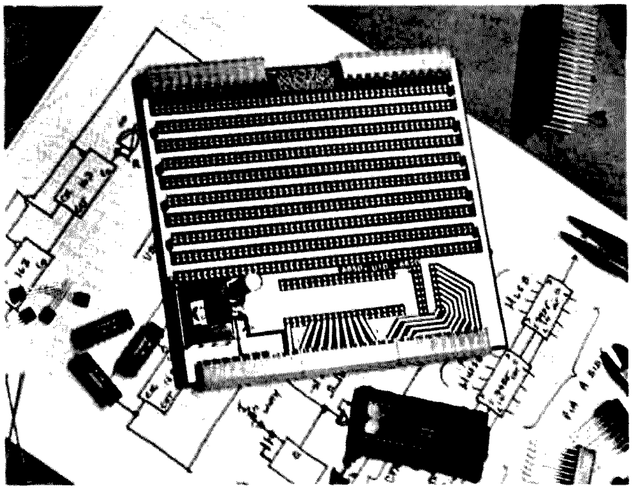

Order out of chaos: The Micro Works Universal I/O Board.

UNIVERSAL I/O BOARD

The Micro Works Universal I/O Board is just the thing for custom interfaces. The board has space for a 40-pin wire-wrap socket into which you may plug any of Motorola's 40-or 24-pin interface chips; the data and control lines are connected to the appropriate edge connector pins. All other bus connections are brought out to a 16-pin socket pad. A + volt regulator and all molex connectors are provided; regulated + and ground are bused among the locations for up to 35 14-pin ICs. Price: $24.95.

The high quality Micro Works extender boards are double sided, with the bus extensions on the bottom and a ground plane on top. Both sides are solder masked. Silkscreened bus pin designations make debugging easy. Prices: X-50 (S-50 bus), $29.95; X-30 (S-30 I/O bus), $22.95.

All Micro Works 6800 computer accessories come fully assembled, tested, and burned in as necessary. They feature prime components, double-sided PC boards with plated-through holes, solder mask, and silkscreen component markings where appropriate. All software is fully source listed and commented; complete schematic diagrams are included. Delivery is from stock. *The Micro Works, PO Box 1110, Del Mar CA 92014, (714)-756-2687.*

WHAT'S THE WORLD SAYING?

Our ever-shrinking world and its multiplying problems have

Standard's GMR-1 transceiver and 12/120-GMR supply.

The Yaesu FRG-7000 receiver.

resulted in a new hobby—listening to what countries all over the world are saying to us, and about us, to their own people.

Shortwave "DXing," as it is called, is rapidly mushrooming in popularity amongst people of all ages and in all walks of life.

To fill the need for an exceptionally stable and sensitive receiver capable of top performance, Yaesu Electronics Corporation has introduced its model FRG-7000. Tabletop in design, it offers stability, sensitivity, selectivity, and calibration accuracy rarely found in receivers offered to the general public.

The FRG-7000 will allow one to explore the far corners of the world from the comfort of the living room, with digital accuracy, using all modes of reception, single sideband, regular AM (broadcast), as well as code (CW). It provides complete and continuous coverage of all frequencies from .25 kHz to 29.9 MHz. This includes all Citizens Band channels, foreign broadcast, and amateur radio frequencies, with superlative performance in all modes of reception.

SWLers, mariners, and radio amateurs will find the FRG-7000 an invaluable communications aid of outstanding quality and workmanship.

For full details on technical specifications, contact: *Yaesu Electronics Corporation, 15954 Downey Avenue, PO Box 498, Paramount CA 90723.*

NEW RADIO SHACK MICROCOMPUTER CATALOG

Just issued by Radio Shack is their new 8-page TRS-80 Microcomputer System Products catalog.

The catalog features Radio Shack's $599.00 TRS-80 microcomputer system and provides information on upgraded systems, peripherals, and ready-to-use software developed specifically for the TRS-80.

The basic TRS-80 system, described as the "beginner's choice," offers Level-I BASIC with 4K of ROM to produce a thorough and easy-to-understand computer language. Its 4K RAM is said to contain sufficient memory to accommodate many home, school, lab, or small business uses.

Expanded TRS-80 systems, including a 4K "Educator" system priced at $1198.00, a 16K "Professional" system selling for $2385.00, and a 32K "Business" system for $3874.00, are also featured in the catalog.

Also included in the new catalog is information on "How to Expand Your Existing TRS-80 System," with details of Level-II BASIC, and an Order Worksheet that helps the customer custom-tailor a TRS-80 system to his particular needs.

The new Radio Shack TRS-80 Microcomputer System Products catalog is available free, on request, from Radio Shack stores and dealers, nationwide. Items listed in the catalog may be ordered through any Radio Shack store or participating dealer.

New catalog from Radio Shack.

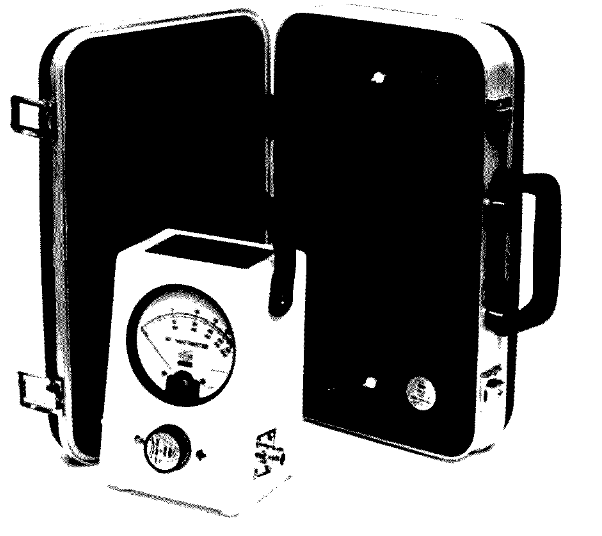

Watt-Kit from Dielectric Communications.

DIELECTRIC ANNOUNCES WATT-KITS

Dielectric Communications, a unit of General Signal Corporation, announces the availability of Watt-Kits, rf power measuring kits, catalog numbers 1000-K1, K2, K3, and K4. The kits consist of the type 1000 rf directional wattmeter and 100-Watt plug-in elements, enabling the user to measure 100 Watts full-scale from 25 MHz to 1 GHz. Also included is a quick-match UHF connector, two-foot patch cable with connectors, and a luggage-style carrying case to house the complete kit. The K3 and K4 kits also include a type 4100, 100-Watt dry terminating load. Prices for the kits range from $280 to $465, and they are available from stock. These kits make it possible to obtain everything required for the measurement of forward and reflected average rf power (and vswr, using a simple nomograph) by ordering a single catalog number. The cases are fitted with additional space for storage of manuals, vswr nomographs, additional plug-in elements, and connectors. *Dielectric Communications, a unit of General Signal, Route 121, Raymond, Maine 04071.*

NEW PRODUCTS: SST T-1, T-2, AND T-3

SST Electronics has introduced two new antenna tuners after six years of producing the SST T-1, the original random wire antenna tuner.

Every SST tuner is built with high quality components and workmanship. Yet SST tuners offer features not included in tuners costing more. All SST tuners use an efficient toroid inductor for maximum versatility and compact size.

Continued on page 190

The SST T-2 Ultra Tuner.

Looking West

Bill Pasternak WA6ITF
24854-C Newhall Ave.
Newhall CA 91321

I hope I am mistaken. I really hope that the FCC knows what it's doing, but I have a feeling that this time they are wrong. I'm speaking about the announcement of March 23, 1978, that totally deregulated repeaters and dealt a death blow to special repeater callsigns. I hope that the FCC has not also dealt a death blow to voluntary coordination and thereby negated the many years of work done by great numbers of dedicated amateurs. I know some of you are going to say that ITF is playing the part of a pessimist, but the fact is that by the time you read this there will be only two criteria necessary to put a repeater on the air: a Technician class or higher license and a checkbook. Not so long ago, it took technical expertise, a desire to advance the state of the art, and this same desire to serve the needs of the amateur community. Out of this has come a national network of two meter repeater systems that spans the nation. It's almost impossible these days to travel anywhere within the 50 states and not be in range of a two meter repeater. Ten years ago, when I first drove across the country, the rule of the day was hunt and peck. Today, you can't get away from a QSO. Repeaters are everywhere and that's good.

However, I have to ask the following questions: How many repeaters are enough? What total number of systems will constitute fulfilling everyone's needs? Is the magic number 2,000? 5,000? 10,000? Will the "need for repeaters" keep going until every amateur has his own system for his exclusive use? Is there a real need for any more than we have now?

A repeater is of little use unless it is used. One that is placed into operation and winds up with one QSO every three days is of little value and is better taken out of service, since it is then nothing but an economic drain to its owner. There are exceptions to this. Repeaters serving areas such as our nation's wildernesses and deserts as lines of emergency communications and vehicles for friendly chit-chat are an entirely different thing. Their need is dictated by their service area. However, here in L.A. proper, for example, we have a myriad of repeater systems. You can hardly find a channel that does not have one or more (usually more) repeaters coordinated on it. Yet, although good quality, wide coverage repeaters of "open" format reside on these channels, you can sometimes listen for days on a channel and not hear one QSO take place. You can hear an occasional kerchunk without an identification other than that of the repeater itself, but not a QSO. The why's and wherefore's of this phenomenon are unknown to me, but it exists here and, I am willing to bet, in other big cities. There may be 25 or 50 repeaters available, but three or four account for the majority of activity.

If this is the case, why go ahead and put more repeaters on the air just to take up space? There is a far better way, but it takes implementation of a term that is very lacking in today's society: cooperation. Say your group decides that it wants the advantages of its own repeater and makes plans to put one up. Well, that's one way, the usual way. However, if you take the time to search around a bit, I am willing to bet that you will discover inactive operational systems in your area that can fulfill the needs of your organization. Should such be the case, you can save yourself the aggravation of repeater ownership by working out a cooperative venture with the system's owner to utilize the relay ability of the system in exchange for the ongoing support that a system needs. In this way, you have no initial investment and no ownership responsibilities—yet the relay ability of the repeater is yours. It's called "cooperative operation," and it works.

Let me cite an example. One of the nicest ways to operate on two meter FM in Los Angeles is through the WR6AHM repeater located atop Magic Mountain. This "box" seems to "talk forever," yet its operation is very clean and the people who operate on it regularly are some of the nicest to be found anywhere. Virtually everyone you speak to thinks that the WR6AHM repeater is owned and operated by the Santa Clarita Amateur Radio Club. While it's true that you find a lot of SCARC members on WR6AHM, the club does not own the radio. WR6AHM is owned by an individual amateur, and the Santa Clarita club acts as a user support organization for the repeater. Such has been the case for a good many years, and this relationship has worked well for both parties. Everyone has what he needs, and thereby the need for another repeater is negated. If such agreements can be made to work here in a political hotbed like Los Angeles, I can't imagine any place where they wouldn't.

Another problem that is arising is that of user allegiance. Simply put, a user can't be expected to financially support every repeater upon which he operates. As more systems come into being, financial support dwindles, since the average user cannot decide which particular repeater deserves his support. So he supports none. In the end, this will lead (and already has led) to "open repeater attrition." When a system owner finds that the ego trip is over, that it's costing him a bundle to keep "WR whatever" on the air, and that the majority of users are not "doing right" by the service he is providing, he has but two alternatives. He can either take the repeater out of service, or, as more and more system owners are doing, he can convert it to a "private" system with a select usership. Since the vast majority of "privates" require financial support as a part of system club membership, they have little in the way of user support problems. I'm not predicting that every open system in the nation is about to disappear, but it *has* happened already and will probably continue. I know that even mentioning "repeater support" is a sore spot for many, but we happen to live in a real world which requires real money.

If we regularly use a system, we have an obligation to do our share to keep it on the air. If we use five regularly, we have the obligation to support all five . . . or ten, or twenty, or what have you. This can really get expensive, and very few of us can afford to support all the open systems in an area like New York or Chicago. So how do we do it? Well, I have all sorts of ideas along these lines, such as a central support fund or a support fund set up through the local coordination council, but some people would always say that they were not getting enough. Therefore, I will leave the solution to your imagination. One thing is clear, though: If open repeaters are to survive, it's up to each of us in his own way and to the best of his ability to render the necessary support—be it financial or otherwise.

"REMOTE NOTE" DEPARTMENT

I recently received a letter from Bill Kleronomos WA9OZC in Westchester, Illinois. Bill owns WR9AMI, one of the few "California-style" remotes found outside of California. The letter concerned ten meter FM and establishing an international 10 meter remote intercom channel. Actually, Bill suggested a national channel, but, ten meters being the kind of band it is, any intercom channel would actually be international in nature. Well, 29.6 is the national FM calling channel, but when ten opens, 29.6 does get kind of hectic. Anything below 29.5 would interfere with OSCAR operations, and above that you have repeater channels. So by default, we have no place other than 29.5. I think that 29.5 might be what remotes need as a common meeting ground for channelized long-haul operations. Any takers?

Bill would also like to know of others involved in 10 meter remotes, especially on the air. To quote Bill's note: ". . . it kinda gets lonely being the only remote W6-style in this here corncob country."

"SOME NOTES ON 220" DEPARTMENT

I guess I must be on everyone's mailing list, since quite a bit of literature seems to arrive each month. In most cases, there is just far too much to mention in this column. However, once in a while something really special shows up, and this seems to be the case with a newsletter called *220 Notes.*

Published in Chicago by Lee Knirko W9MOL, *Notes* has quickly grown from a regional service publication to a bimonthly which has the ability to hold the interest of any amateur involved in 220 MHz FM and repeater operation. For example, a recent issue (February, 1978) contained a most interesting article that covered all of the currently available 220 MHz FM equipment, including antennas and accessories. It is probably the most complete listing of such information to be found anywhere, and it is obvious that Mike Sterling WA9QGY spent a lot of time researching his material. The same issue contained an article on improving repeater audio, and even a short piece on playing chess via amateur radio. *Notes* is just chock-full of all sorts of interesting material and is well worth the nominal $3.00 subscription fee that brings you a year's worth of enjoyment. To subscribe, send $3.00 to *220 Notes*, c/o Virginia Sterling WB9UFV, 9128 N. Lindner Ave., Morton Grove IL 60076.

RTTY Loop

Marc I. Leavey, M.D. WA3AJR
4006 Winlee Road
Randallstown MD 21133

These days, no technical topic in amateur radio is "hotter" than microprocessors and computers, and perhaps nowhere else in our hobby is a computer more useful than in RTTY. This is evidenced by the growth of the I/O section in *73*, and the many related topics seen in *Kilobaud*, *Byte*, and other computer publications. What we will try to do this month is develop the logic for a RTTY receiving program, which can be implemented on about any microprocessor. Next month, detailed information for programming an SWTPC 6800 will be presented.

To begin with, let's define the problem. We must:

1. Input data to the computer from a 60 mA, Baudot encoded, 45.45 baud loop;
2. Transform that data to a machine-usable form;
3. Convert the Baudot code to ASCII;
4. Display the data to the operator.

There are several ways of getting information out of a loop at non-loop levels. Two of the more common are optoisolators and reed relays. Optoisolators are tiny, encapsulated units that have an LED shining on a photosensitive diode or SCR (LASCR). As the LED shines, the diode conducts, and TTL level voltages, which are the levels that make most computer inputs happy, can be controlled. The alternative, the magnetic reed relay, has been covered before in this column in the context of transmitting keyers. If you have such a relay installed, it can be used for this application directly, or another can be inserted. Whatever the technique (even a polar relay can be pressed into service), the object is to have a pair of wires *isolated* from the loop that are *shorted together* during MARK and *open* during SPACE.

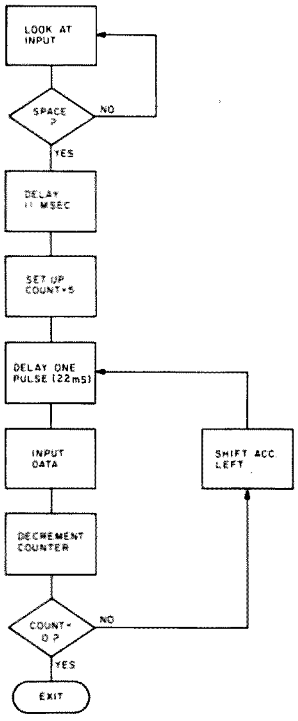

Fig. 1. Input Baudot data.

Once you have these wires, one of them should be connected to the computer *ground*, and the other to the least significant bit (LSB) of a *parallel* input port. A pull-up resistor to +5 V may be required, as with the Southwest MP-LA parallel board. Now, you may have noticed that we are taking serially encoded data and feeding it to a parallel input. That is because many of the UARTs normally used have two faults which make them unusable for our purposes. First, they cannot be configured for five bits, which Baudot is, and second, the available clock is normally faster than 45 baud. So what we will do is present the data to an open port, and let the serial-to-parallel conversion be done in software.

Fig. 1 is a diagram of just how that transformation takes place. Recall that the five bit Baudot code is really transmitted as a seven and one-half bit string. First comes the START bit—always SPACE— followed by the five DATA bits, then a STOP bit—always MARK— which is 1.5 times as long as any other bit. Keep this in mind as we scan the flowchart.

To begin with, the computer just sits there and waits for a SPACE to appear on the input line. This means that a character is on the way. The computer then delays for 11 milliseconds (remember that a pulse is 22 ms long), which makes it the center of the START pulse, then an additional 22 ms, putting it smack dab in the middle of the first data bit. Meanwhile, a counter is set up to count down the five data pulses. Each pulse is input into the accumulator, which has its contents shifted after each entry to build a replica of the character there. Again, a 22 ms delay is built in after each sample, to place the sampling time within the data pulse. As an aside, more complex programs could sample each data pulse multiple times, and logically decide whether a bit was MARK or SPACE, thus offering a good deal of noise immunity in the decoding. We come out of this routine, then, with a representation of the Baudot letter in the right side (LSB side) of the accumulator.

Our next task is to convert this Baudot data into ASCII. The method for this is diagrammed in Fig. 2. This is the "lookup table" method of code conversion, which is reliable and fast enough for such a transformation. Because Baudot contains no information as to whether the current character is upper or lower case, a case "flag" must be maintained to tell the program which of two tables, upper or lower case, to use. Receipt of the LTRS or FIGS characters can cause resetting of this flag. So, the incoming character is checked first to see if it is a LTRS or FIGS; if so, the flag is set accordingly. Next, it is tested for a space character which, if present, forces the letters table to be selected. This accomplishes a software "downshift-on-space." Also, carriage returns are decoded as an entire carriage-return/line-feed/erase-line string, and line feeds are trapped and not decoded. If none of the exceptions are encountered, the table looks up the character at the address pointed to in Baudot and supplies the ASCII equivalent.

Now it gets easy. Most, if not all, monitors have a routine to output a character in the accumulator to the terminal. It's called OUTEEE in Motorola MIKBUG™. All you have to do is call that routine and you're in business, right? *NO!* If you stop to think for a minute, realize that while all this looking up and converting has been going on, the next character has been warming up to come down the pike. In fact, you can consider that the time you have to send the character is from after you get the fifth bit and decode until the next START pulse is expected. That's approximately the width of the STOP bit: 31 ms! A 110 baud terminal, like an ASR-33, is just too slow to receive 60 wpm RTTY! The minimum speed for acceptable copy, with no margin of safety, is 300 baud; faster is better. This limits us to TVTs or rapid printers. An alternative is to put the text into memory while displaying it, and have it read back at 110 baud later, for the slowpoke ASR-33s in the crowd.

Next month I will cover the implementation of this program on an SWTPC 6800 system in some detail. For those of you anticipating trying it, I will tell you that you need the reed relay or equivalent installed, an MP-L or MP-LA parallel input port, and not very much memory. The whole shebang will run in under 2K of RAM. Those of you with other systems may take a stab at writing some programs. Send any good ones along and we may include them in future columns.

For those of you who cannot stand "one more article about dem blasted computers," bear with me next month. You've been outvoted by numerous letters. After that, we'll get back to answering many of the questions sent in.

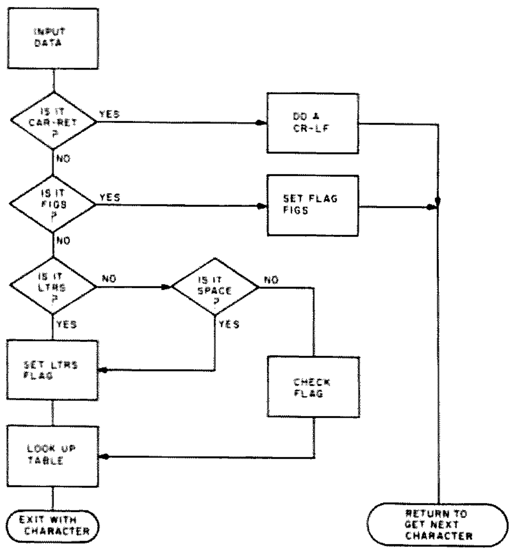

Fig. 2. Decoding.

AMSAT

ANOTHER AMSAT-OSCAR IS IN ORBIT

Precisely on time and with all the characteristics of a textbook description of a rocket launch, a Delta 139 rocket lifted off from the NASA Western Test Range at Lompoc, California, on March 5 at 9:34 am PST. It was carrying AMSAT-OSCAR 8 as a secondary payload, with its primary mission the LANDSAT-C. There is a third payload aboard. It is the PIX, Plasma Interaction Experiment, devised by researchers at NASA's Lewis Research Center in Cleveland, Ohio. The experiment is designed to study the effects of the space environment on high voltage components in the presence of arcing. This is of significance for high voltage solar panels and ion propulsion systems in future spacecraft.

The eighth OSCAR replaces the capability that had been lost when OSCAR 6 went out of service in the latter part of June, 1977, due to battery failure. *Its demise was hastened by the selfish users who attempted accessing OSCAR 6 with powers many orders of magnitude higher than the recommended maximum of 100 Watts erp.* (A 10 Watt transmitter will get you into OSCAR 7 and also into the new OSCAR 8.)

In AMSAT-OSCAR 8 the mode A translator will provide the same capability that the 2 meter-to-10 meter translator did in OSCAR 6. The uplink passband is from 145.85 MHz to 145.95 MHz with an output from 29.45 to 29.55 MHz. The translation is linear so that an upper sideband input signal will also be upper sideband on the output. The mode A beacon frequency is at 29.402 MHz.

A capability not previously available in the circumpolar orbiting OSCARs is the 2 meter-to-70 centimeter translator with an input passband from 145.9 to 146.0 MHz. This is the mode-J translator with a downlink passband of 435.2 to 435.1 MHz. The descending order is to signify that the output passband is inverted with respect to the input. There is a beacon at 435.095 MHz.

The mode A translator was designed and built by Richard Daniels WA4DGU and Dr. Perry I. Klein W3PK (AMSAT President). The mode J translator was built by members of the Japanese affiliate of AMSAT, known as JAMSAT. JA1CBL, JG1CBL, JG1CDM, JA1JHF, and JR1SWB are among the calls listed as having contributed.

The beacons transmit Morse code telemetry data relating to the condition of the spacecraft and its components. The AMSAT-OSCAR 8 telemetry systems is a product of the efforts of John Goode W5CAY, Dick Daniels, and others. It measures six analog parameters in the spacecraft, and converts them into two digit Morse code values which are transmitted along with a third digit preceding each telemetered value to identify the channel number. The code rate is 20 wpm.

As this is being written, OSCAR 8 is in good health as determined by its telemetered data, and it is open for use by amateurs all over the world. AMSAT, the ARRL, and AMSAT affiliates are urged to prevail upon their members and users not to exceed the recommended power limit of 100 W erp when accessing OSCAR 8 (and OSCAR 7, as well).

It was a primary purpose in hurrying AMSAT-OSCAR 8 into orbit to give back to the schools a space communications vehicle which they could use in science classes to permit their students to have a hands-on experience with space communications, space technology, orbital science, and the computational and technical aspects of this new frontier. For this reason, at the present time the mode A translator will be in operation on Mondays, Tuesdays, Thursdays, and Fridays GMT. The Wednesday periods will be available for experimenters. The mode J translator will be in operation from zero hour GMT Saturday until 23:59:59 Sundays GMT. Orbit information is broadcast on W1AW and the AMSAT nets. For information, contact Bernie Glassmeyer W9KDR at ARRL headquarters, or AMSAT at PO Box 27, Washington, D.C. 20044.

Dr. Norman L. Chalfin K6PGX
Pasadena CA

AMSAT-OSCAR 8 LAUNCHED

A-O-D became AMSAT-OSCAR 8 on Sunday, March 5, 1978. A "textbook" launch fired LANDSAT-C and its passengers into orbit from the Vandenberg Air Force Base in California, 551 milliseconds into the launch window. Radio amateurs around the world followed the launch sequence in real time by means of the AMSAT Launch Day Operations Nets activated by W3ZM, WA3NAN, and others. The voice of Will Webster WB2TNC operating from WA3NAN at the Goddard Space Flight Center in Maryland echoed around the world as he relayed the launch and subsequent phases of the orbit injection sequences. Such was the level of interest that several times no signals were present on 14280 kHz for periods ranging up to 90 seconds at critical points in the mission sequence. These periods of silence on 14280 kHz took place right in the middle of the ARRL DX Phone Contest. Hundreds of stations checked into the nets; many more called in or just monitored the activity.

The flight of the launch vehicle was followed, the ejection of LANDSAT noted, the additional orbit correction burns noted, and then OSCAR was ejected. Then, WA3NAN announced that OSCAR was free. 14280 kHz was silent; then G2BVN called in with the first report of telemetry reception from the AMSAT-OSCAR 8 spacecraft. Minutes later, WØPHD reported the first American reception of signals. Stations reporting reception of the telemetry on the first two orbits included VE6SW, GM8BKE, and N6DD.

WB5MPU reported one frame of telemetry when the satellite was well below his horizon. DL3SX telephoned Washington, D.C., with telemetry data. Early telemetry showed that the spacecraft was spinning at the gentle rate of 1.3 rpm. It was then decided to extend the 10 meter antenna on the first pass over the eastern USA that night. Interest was high; everyone was available and the net opened up on 3850 kHz. Randy VE3SAT, the command station, relayed the sequence of events as he sent the commands to the spacecraft and the "beep, beep, beep" of 435.095 MHz as the antenna deployed was heard.

The initial telemetry data as reported by Roy Stevens G2BVN was: tone, 391 459 556 603 HI 173 251 389 459 556 606. During the first few orbits, the spacecraft stabilized. It should be noted that stations reporting from the USA indicated that channel 6 was showing counts of the order of 601-603, yet stations in Europe were reporting 618-623, showing that signals were present in the uplink passband in Europe.

Joe Kasser G3ZCZ/W3
Silver Spring MD

AMSAT-OSCAR 8 ORBITAL DATA CALENDAR

In cooperation with AMSAT, Skip Reymann W6PAJ expects to have available by the end of May an AMSAT-OSCAR orbital predictions calendar containing all orbits of the new AMSAT-OSCAR 8 satellite for the remainder of 1978.

The orbital calendar will be available postpaid for $5.00 U.S. funds or 30 IRCs ($3.00 to AMSAT members, and free *on request* to AMSAT life members). Overseas orders will be airmailed. Orders and payments should be made in U.S. currency to: Skip Reymann W6PAJ, PO Box 374, San Dimas, California 91773 USA. Orders may also be charged to VISA or Master Charge. (Be sure to provide your account number, expiration date, and other information on your charge card.)

For those still without an AMSAT-OSCAR 7 orbital calendar, a new printing is expected to be available shortly from Skip Reymann. Prices and ordering information are the same as for the OSCAR 8 calendar.

Important: To speed up handling of your order, please include a gummed, self-addressed label.

Proceeds from the orbital calendar benefit AMSAT.

Ham Help

I need a schematic for an RME 4350 receiver. Can someone help?

William Bragg
1424 College
Des Moines IA 50314

I need a manual or schematic for a Heath model OMI scope.

Mickey McDaniel W6FGE
940 Temple St.
San Diego CA 92106

I would like to hear from any amateur radio operator who is using a heart pacemaker.

Joseph Schwartz K2VGV
43-34 Union Street
Flushing NY 11355

I am looking for some information on using an 1821 transmitting tube as a final amplifier in a 2 meter SSB transmitter. I have checked through a lot of *73 Magazines* but have not come up with any articles using an 1821 tube.

John Flynn K3BDO
1925 Kansas Ave.
McKeesport PA 15131

FCC

Before the
FEDERAL COMMUNICATIONS COMMISSION
Washington, D.C. 20554

In the Matter of

Amendment of Part 97 of the Commission's Rules concerning operator classes, privileges, and requirements in the Amateur Radio Service.

Docket 20282

RM-1016, 1363, 1454, 1456, 1516, 1521, 1526, 1535, 1568, 1572, 1602, 1615, 1629, 1633, 1656, 1724, 1793, 1805, 1641, 1920, 1947, 1976, 1991, 2030, 2043, 2053, 2149, 2150, 2162, 2166, 2216, 2219, 2256, 2284, 2449

Second Report and Order

Adopted: March 22, 1978;
Released: April 6, 1978
By the Commission: Commissioner White dissenting.

1. On December 16, 1974, the Commission released a Notice of Proposed Rule Making in this proceeding which was published in the Federal Register on December 20, 1974 (39 FR 44042). A First Report and Order was released on June 15, 1976 (41 FR 25013). This Second Report and Order is a further step in the resolution of the very complex and far-reaching proposals of the Notice.

2. In the Notice, the Commission proposed to expand the frequencies available to Technician Class licenses. Presently, Technicians may operate in the bands 50.1-54.0 MHz, 145-148 MHz, and on all amateur frequencies above 220 MHz. The proposed rules would have permitted operation on all amateur frequencies above 50 MHz. This proposal was supported by the American Radio Relay League (ARRL) in its comments, and by numerous individual amateurs.

3. In light of actions now being taken in Docket 21033 concerning frequencies available for repeater station use, we believe the time has come to grant expanded frequency privileges to Technicians. Specifically, we will amend Section 97.7(d) of the Amateur Radio Service Rules to permit Technician Class licensees to operate on all frequencies above 50 MHz. We believe this action will give greater flexibility to such licensees who wish to do experimental and weak-signal work in the 50 MHz and 144 MHz bands.

4. In Docket 20282 the Commission also proposed to make the Novice Class operator license, which is currently a two-year nonrenewable license, a five-year renewable license. There was strong support for this proposal in the comments, and we are adopting it as proposed. We are amending Section 97.13 of the Rules accordingly. Licensees now holding Novice Class licenses may renew them upon proper application.

5. In view of the foregoing, we believe that the amended rules, as discussed above, are in the public interest. Accordingly, pursuant to authority contained in Sections 4(i) and 303 of the Communications Act of 1934, as amended, it is ordered that Part 97 of the Commission's Rules is amended as set forth in the attached Appendix. It is further ordered that this proceeding is continued. The rule amendments adopted herein become effective May 15, 1978.

FEDERAL COMMUNICATIONS COMMISSION
William J. Tricarico
Secretary

APPENDIX

Part 97 of Chapter 1 of Title 47 of the Code of Federal Regulations is amended, as follows:

1. §97.7(d) is amended to read, as follows:
   §97.7 Privileges of operator licenses.

(d) *Technician Class.* All authorized amateur privileges on the frequencies 50.0 MHz and above. Technician Class licenses also convey the full privileges of Novice Class licenses.

2. In §97.13, paragraph (b) is deleted, paragraphs (c) through (f) are redesignated paragraphs (b) through (e), and paragraph (a) is amended, as follows:
   §97.13 Renewal or modification of operator license.

(a) An amateur radio operator license may be renewed upon proper application.

PART 97—AMATEUR RADIO SERVICE

[6712-01]

Amateur Radio Operation in the 220-225 MHz Band in Portions of the States of Texas and New Mexico per Previous Commission Order

AGENCY: Federal Communications Commission.
ACTION: Editorial order.
SUMMARY: The FCC is deleting a restriction on the operation of amateur radio stations in parts of Texas and New Mexico in the 220 MHz-225 MHz band. This action is being taken to make the FCC's amateur radio rules consistent with the FCC's Table of Frequency Allocations.
EFFECTIVE DATE: April 10, 1978.
ADDRESS: Federal Communications Commission, Washington, D.C. 20554.
FOR FURTHER INFORMATION CONTACT: Mr. Gregory Monroe Jones, Rules and Legal Branch, Personal Radio Division, Safety and Special Radio Services Bureau, 202-634-6619. (This is not a toll-free telephone number.)
Adopted: March 24, 1978.
Released: March 29, 1978.

Order. In the matter of Amendment of part 97 of the Commission's rules to delete §97.61(b)(6), concerning amateur radio operation in the 220-225 MHz band in portions of the States of Texas and New Mexico per previous Commission Order.

1. On November 22, 1977, the Commission adopted an Order which eliminated footnote NG 13 to the Table of Frequency Allocations, §2.106 of the Commission's rules. This footnote imposed restrictions on the use, by the Amateur Radio Service, of the 220-225 MHz band in certain areas of the United States.

2. The deletion of NG 13 removed the restriction on the use of the 220-225 MHz band by amateur stations between the hours of 0500 and 1800 local time Monday through Friday, inclusive, in those portions of the States of Texas and New Mexico in the area bounded on the south by parallel 31°53' N., on the east by longitude 105°40' W., on the north by parallel 33°24' N., and on the west by longitude 106°40' W. Amateur stations are now permitted to operate on the 220-225 MHz band in all portions of the United States subject to the continuing restriction of footnote U.S. 34, which prohibits harmful interference to the Radio-location Service.

3. Footnote NG 13 is duplicated in §97.61(b)(6) of the rules. The Commission's Order of November 22, 1977 only deleted Footnote NG 13, however, it did not eliminate §97.61(b)(6). This Order deletes §97.61(b)(6).

4. Since the amendment we are adopting is editorial in nature, the prior notice and public procedure provisions of the Administrative Procedure Act, 5 U.S.C. 553, are not applicable. Authority for this action is contained in sections 4(i), 5(d), and 303 of the Communications Act of 1934, as amended.

5. *Accordingly, it is ordered,* That §97.61(b)(6) of the rules is deleted as shown in the attached Appendix effective April 10, 1978.

FEDERAL COMMUNICATIONS COMMISSION
Richard D. Lichtwardt
Executive Director

Part 97 of Chapter 1 of Title 47 of the Code of Federal Regulations is amended as follows:

1. In §97.61, authorized frequencies and emissions, limitation (b)(6) is deleted and designated (Reserved) as follows:

§97.61 Authorized frequencies and emissions.
(a) * * *

Frequency band	Emissions	Limitations (see par. (b))
*	* * *	*
Megahertz		
*	* * *	*
220-225	A0, A1, A2, A3, A4, A5, F0, F1, F2, F3, F4, F5	5
*	* * *	*

(b) * * *

* * * * *

(6) [Reserved]

* * * * *

Ham Help

Help! I've purchased an oscilloscope at an auction and now I need a schematic/operation manual for it. Letters to the manufacturer are unanswered and phone calls end in no listings in Glendale, LI, NY. It is a Paco Electronics Co., Inc. (Precision Apparatus Co.), direct coupled dc to 5 MHz. wide band oscilloscope, model #S-55, serial #2772.

I will gladly pay reasonable copying/shipping, etc., costs for the information.

Donald M. Fielding W4FGT
2207 NW 61st Place
Margate FL 33063

Social Events

MIDLAND MI
JUN 3

The fourth annual Midland hamfest sponsored by C.M.A.R.A., Inc. (Central Michigan Amateur Repeater Association) will be held at the Midland County Fairgrounds in Midland, Michigan, on June 3, 1978. Camping Friday night will be $4.00 per trailer. The swap and shop on Saturday will be from 7:00 am until 3:00 pm. There will be a big computer demonstration with many systems on display running. The drawing for door prizes will be held at 2:30 Saturday. Tickets will be $1.50 in advance, $2.00 at the door. Kids under 12 are free with parent. Send an SASE with your check to: D. Zahm WB8SDJ, 3871 Monroe, Rte. 8, Midland MI 48640. For commercial exhibits, reserve in advance by contacting J. Gunsher W8JDW, 4307 Bluebird Dr., Midland MI 48640. Tables will be available at the door or by reservation now (approximately 3' x 6') for $2.00 each. Talk-in on 07/67 Midland and 13/73 Pleasant Valley, portables on 52. An auction sale will start at 1:00 for all the stuff you don't want to take home. Take I-75 north to U.S. 10 west (Midland) to the Eastman Rd. exit.

MINNEAPOLIS-ST. PAUL MN
JUN 3

Dakota's Division's largest swapfest and exposition for amateur radio operators and computer hobbyists will be held on Saturday, June 3, at the Minnesota State Fairgrounds. Free overnight parking for self-contained campers on June 2 only. Talk-in on 16/76 and 52/52. Sell from your car in the giant flea market. Inside space available. There will be many great prizes, and forums are scheduled on FM and microprocessors. Admission will be $2.00. For information or reservations for commercial exhibit space, call (612)-933-2823.

CHELSEA MI
JUN 4

The West Washtenaw swap and shop, sponsored by the Dexter Amateur Radio Club and the Chelsea Communications Club, will be held at the Chelsea Fairgrounds on June 4th, from 8:00 am to 3:00 pm. Donations are $1.50 in advance, $2.00 at the gate. Table space will be sold at $.50 a foot, and trunk sales are $1.00 per space.

ISLIP NY
JUN 4

The next hamfest sponsored by the Long Island Mobile Amateur Radio Club, LIMARC, will be held Sunday, June 4, 1978, at the Islip Speedway, Islip NY. The gate will be open from 9:30 am to 4:00 pm. General admission is $1.50. All licensed amateurs are expected to purchase a ticket, regardless of sex or age. Ladies and children 12 and under will be admitted free. Sellers' and exhibitors' spaces are available at $3.00 per space. Each space entitles you to have one person enter the grounds. All ticket holders will participate in the door prize drawings, so be sure to save your ticket. Food and refreshments will be available. Use your knowledge in the theory contest or your luck in the who-traveled-the-furthest-to-the-hamfest contest. LIMARC VHF tune-up clinic will be on hand to put you on frequency. Check FM deviation and spurious emissions. Be sure you bring a power cord. There will be a computer display, and ATV, satellite, and ARRL information. The speedway is located on Route 111 (Islip Ave.) one block south of exit 43 of the Southern State Parkway. Commercial vehicles must come via the Long Island Expressway to exit 56 and go south on Route 111 to the speedway. Talk-in on 146.25/85 and 146.52. For information and advance ticket sales write to Hank Wener WB2ALW, 53 Sherrard St., East Hills NY 11577. Please enclose an SASE. Call Hank—days (212)-355-0606, nights (516)-484-4322 or call Ken Denston WB2RYC, nights only, at (516)-379-6463.

WEST HUNTINGTON WV
JUN 4

The Tri-State Amateur Radio Association (TARA) will hold its 16th annual hamfest on Sunday, June 4, at 11:30 am at Camden Park, Rte. 60, West Huntington, West Virginia. Talk-in on W8CA/8, 04/64, 16/76, and 34/94. For information and tickets, write: TARA, PO Box 1295, Huntington WV 25715.

PRINCETON IL
JUN 4

The Starved Rock hamfest will be held on June 4, 1978, at the Bureau County Fairgrounds, Princeton, Illinois. Advance registration is $1.50 if postmarked before May 25; after that it's $2.00. Send a large SASE, please, for registration, map, information, etc., to W9MKS/WR9AFG/SRRC, RFD #1, Box 171, Oglesby, Illinois 61348, or phone (815)-667-4614.

ROME NY
JUN 4

The Rome Radio Club will host its 26th consecutive Ham Family Day on Sunday, June 4, 1978. This is a true ham family event, with a program tailored to the amateur radio operator and his family.

WEBSTER MA
JUN 4

On June 4, 1978, the Eastern Connecticut Amateur Radio Association will hold its 4th Annual Giant Fleamarket at the Point Breeze Restaurant, Webster, Massachusetts. For information, call (203)-928-5930.

MANASSAS VA
JUN 4

The "Ole Virginia Hams" A.R.C., Inc., Annual Hamfest will be held on June 4, 1978, at the Prince William County Fairgrounds, located ½ mile south of Manassas VA, on Rt. 234. Gates will open at 7 am for tailgating and 8 am for general admission. There will be fantastic prizes again this year—a Drake TR4CW transceiver with RIT and ac power supply, a monitor scope, a Bird wattmeter with element, and many others. General admission will be $3.00 per person, under 12 free. Tailgating will be $2.00 per vehicle, with over 300 spaces available. Breakfast, lunch, and refreshments will be served by

Continued on page 162

Ham Help

I would like to hear from anyone wearing a Teletronics pacemaker from an Australian-based company. I am wearing one.

C. F. Poole
116 Grandview Dr.
Fenton MO 63026

I recently purchased a Knight T-60 transmitter and a Knight model KG-650 rf generator. I am in a quandary as to where I might locate operating and servicing manuals, as well as schematics for both units. I would be willing to pay for the copies.

Thomas S. Thiesing
11005 Westonhill Drive
San Diego CA 92126

Please help! I have a Morrow radio system. I would like to have it operating when I get my Novice license. I need a schematic and manual for the MB-560-A transmitter and the FTR-2. I will pay copying, postage, and handling charges.

William R. Good
PO Box 73
Harborcreek PA 16421

I'd like to get in touch with someone who has an image intensifier tube, or who knows where they can be obtained for use in amateur astronomy.

George W. Smythe
POB 846
Stony Brook NY 11790

I need information on the DAVCO DR-30 receiver—toroid and coil specs, possible availability of parts and PC boards, circuit design, etc. The company was in Tallahassee, Florida, and went out of business about 10 years ago. Can anyone from the company still be contacted? I'm trying to restore a DR-30 which had been "redesigned" by a "technician."

Harry A. Winship K5HML/9
4256 Jamie Court
Indianapolis IN 46226
(317)-897-4568

Help! I need a speaker enclosure (with speaker intact) for my Hallicrafters SR-160 transceiver. I don't need the power supply with it (I already have that), but that's the only way amateur radio dealers I've phoned will supply it, and most of them want to sell the rig, too! Any help would be appreciated.

Timothy M. Mrva WD8QLB
PO Box 234
Elsie MI 48831

I am interested in locating and communicating with amateur radio operators handicapped or disabled. I would also like any information possible on clubs or radio nets of this nature.

Gary Mitchell WA1GXE
PO Box 1003
Fairfield CT 06430

I would like to acquire the January, 1975, issue of *73 Magazine* to complete my collection. Can anyone help?

Douglas McArtin
411 Bellevue Ave.
Yonkers NY 10703

I would like to know if there is a ham club in the Sunbury, Pa., area which helps people get their Novice licenses.

Kevin Shipe
Box 1714 HUB
Dickinson College
Carlisle PA 17013

Wayne Green W2NSD/1
Editor/Publisher

Happiness Is Being A Ham Manufacturer

—73 visits Cushcraft

It may come as a surprise that there is one firm in the ham antenna business which makes more antennas than all the other manufacturers combined. That firm is Cushcraft, operating out of Manchester, New Hampshire.

Just last year, Cushcraft built a brand new plant in order to try and keep up with the growth of the business. This plant was designed and planned by Bob Cushman WA1QFY, son of the founder, Les Cushman W1BX.

Les started Cushcraft in 1950, specializing in VHF antennas. At the time, he had three or four employees and was doing a lot of the work himself. Now, in new quarters with about 100 employees, Les is still keeping in close touch with everything.

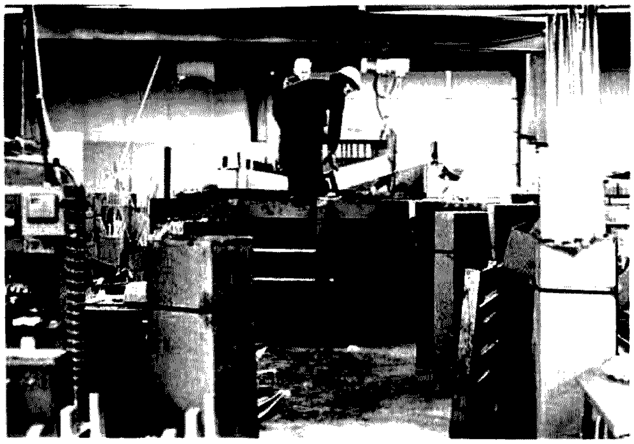

The plant is laid out so that a truck can drive right into one end of the place to deliver raw materials—aluminum tubing for elements and booms, stock for clamps, coils, etc. Here, Dick St. Hillaire is unloading a long box of tubing with an electric winch. Why bother to drive the truck inside? You haven't been through a New Hampshire winter, or you wouldn't ask.

When I needed some special VHF antennas for the *73* radio lab up on Mt. Monadnock, I naturally went to Cushcraft for them. We ended up with a 336-element two meter beam which laid a signal down the east coast that you wouldn't believe. A ham down in Hampton, Virginia, claimed that, when conditions were stinko, the W2NSD/1 signal was only down to S-7. The Cushcraft 16-element six meter collinear also put out a wicked signal, particularly when backed with a kilowatt.

Since I find it interesting to visit some of our manufacturers, I thought you might like to see where the Cushcraft antennas come from.

Looking at the Cushcraft antennas from the standpoint of a user, they have their pluses and their minuses. The minus is that the confounded things never wear out, so, once you put up an antenna, you are darned well stuck with it. The plus is a consistently

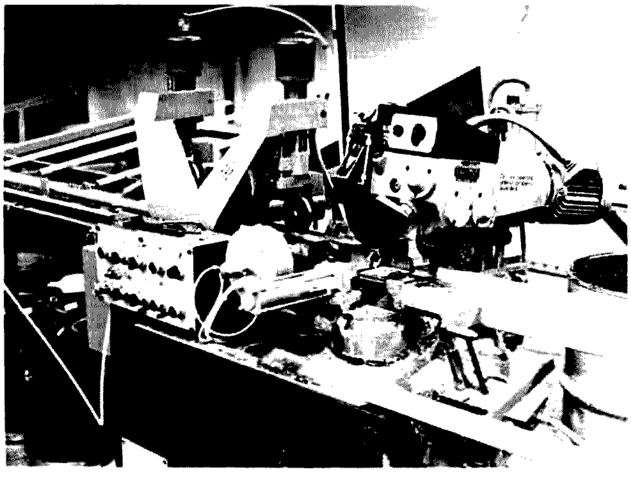

The larger tubing is cut into the right lengths by this automatic tubing saw.

Here's Ray Doville and Claire Jacob assembling baluns for the Cushcraft three-band beams.

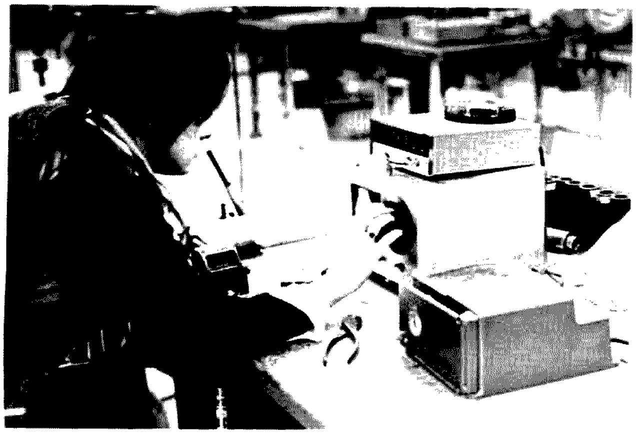

Debbie Narcos is checking the pruning of a coil with an oscillator and frequency counter. They come to her a bit low in frequency, and she gets them right on with the coaxial cable "pencil sharpener" next to her hand.

As we progess through the long buildings, we find more and more parts being made for the antennas—special clamps, Ringo Ranger hardware and tuning stubs, and all those nice things that come pouring out of an antenna box when you open it for assembly. Toward the back of the plant are racks of shelves full of these finished parts, ready for packing.

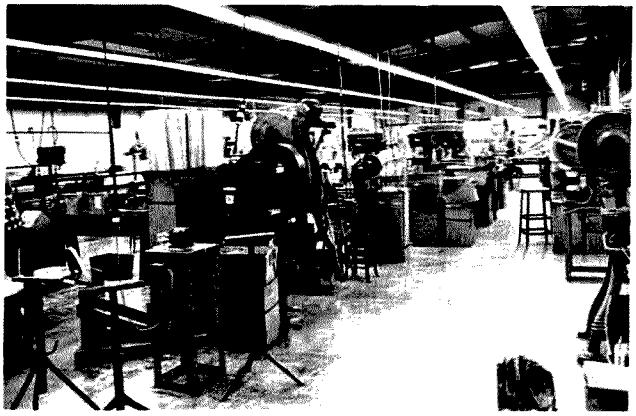

Here's the press department where elements of the various antennas are cut to length and drilled for mountings.

good signal.

I put a three-element 20m Cushcraft up in 1965 and immediately found myself banging heads with the top DXers . . . and winning. I got on one contest weekend and worked 100 countries on 20m sideband. Within one month, I had 200 countries and, within a year, 300. When I called them, they came back.

It was even more impressive on the other end. In 1966, I made a trip around the world, oper-

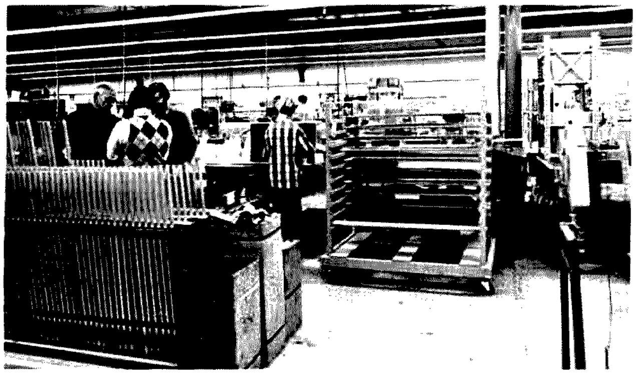

Once the coils are pruned and tuned, they go to the epoxy department so they'll be immune even to New Hampshire weather and California rains.

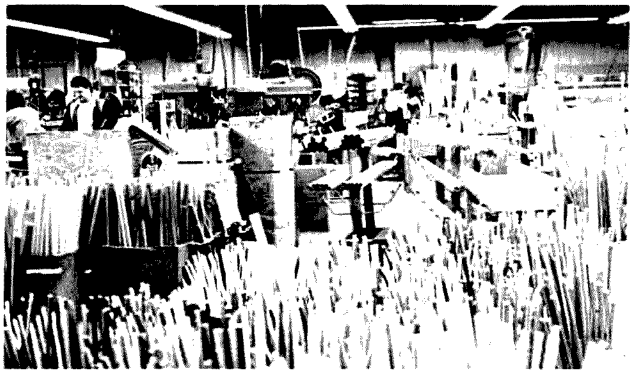

This is the prepackaging department where all of the parts for the antennas are gathered together for packing in the cartons.

Les Cushman talks with Bob Brown about a detail of a loading coil that he wants changed a bit. Les stays right on top of everything that's going on.

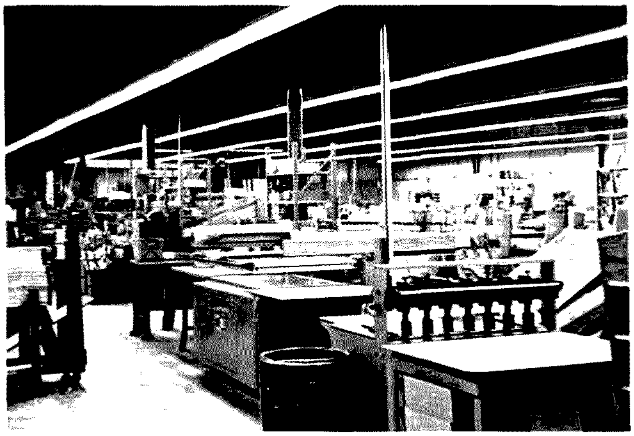

Skin packaging is done here on antennas which will be sold through stores on display racks.

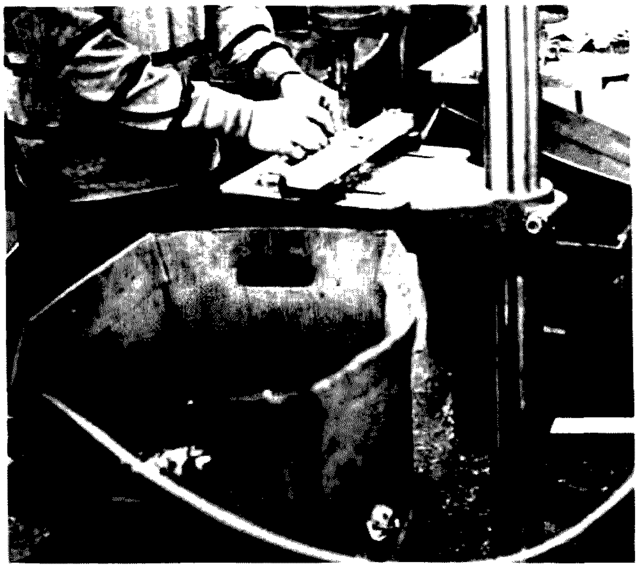

Element clamps and other small parts are machined with these drill presses.

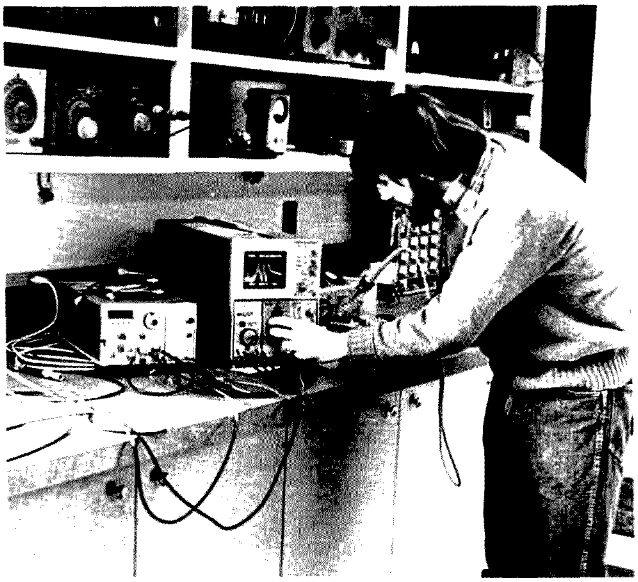

In the lab, where new antennas are developed and current designs are checked for performance, we see Dale Clement WA1FSZ checking the tuning of a three-band beam. The test setup is a ham's dream, with a motor-driven tower for changing antennas easily (well, relatively easily), a frequency sweep spectrum analyzer, and an antenna pickup range fed with hardline coax.

ating from some very rare spots such as 5Z, OD, YK, YA, VU, 9N, 9V, FK8, VR2, KS6, 5W, FO8, etc. No matter where I was, my home station signal would come boiling through.

Some big VHF beams which were first used in 1963 are still being used every year by a local ham group for the VHF contests. Those antennas first suffered massive icing on my mountain, and now they are trucked from Boston to a New Hampshire mountaintop and set up once or twice a year and they're still going! Cushcraft, you make them too good!

That 20m beam lasted for more than ten years before I replaced it with a new Cushcraft beam. Not bad, considering the rough New Hampshire winters.

The next time you see a Cushcraft exhibit at a ham show, be sure to go over and say hello. Les doesn't get to very many shows; he prefers to stay in New Hampshire and give some of his new antenna ideas a workout on the ham bands. Bob gets around to some shows, but, other than that, he sticks close to the plant, keeping the antennas moving out to dealers. ■

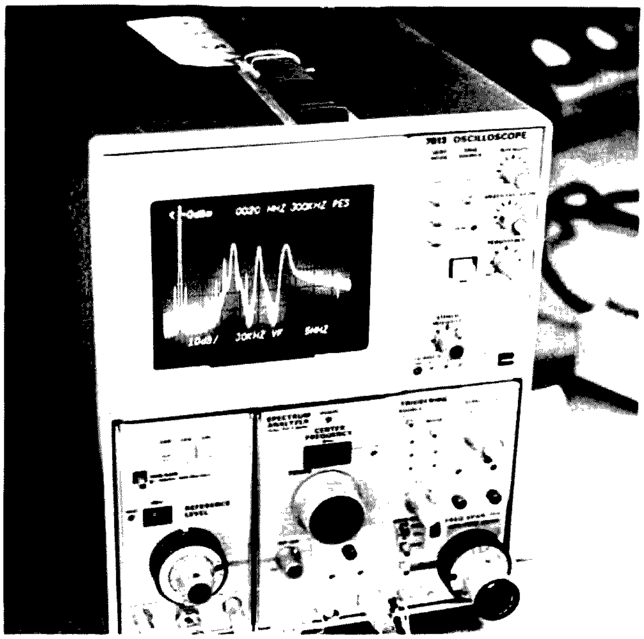

Using a spectrum analyzer, the response of the three-band beam can be clearly seen . . . just in case there was any doubt in your mind about a three-band beam being tuned carefully. Zero frequency is at the left of the screen, with the first pip being the 20 meter response; then there's the 15m and, at the right, the 10m response. The little blips are shortwave stations putting in signals strong enough to show up. That blip way over to the very right is probably a local two meter repeater.

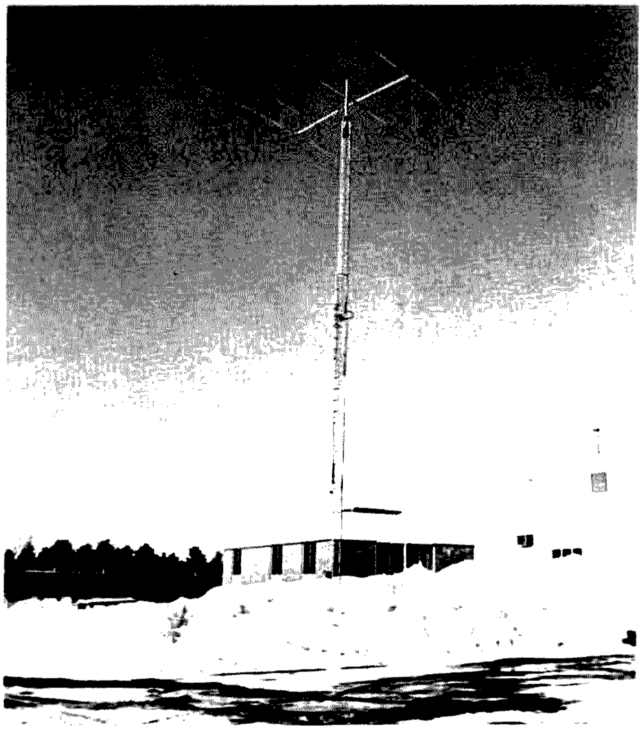

Here's the crank-up tower with a three-band antenna in place for testing. Yes, on rare occasions we do have snow in New Hampshire . . . we have to—the ski areas would raise all hell if we didn't.

Here are hundreds of Cushcraft antennas all set to be shipped out to dealers to fill orders. The manufacturing efficiencies of this new plant make it so Cushcraft can gear up and make a few hundred of a particular model within a few minutes, so it is not necessary to carry huge backlogs of antennas in order to quickly fill orders.

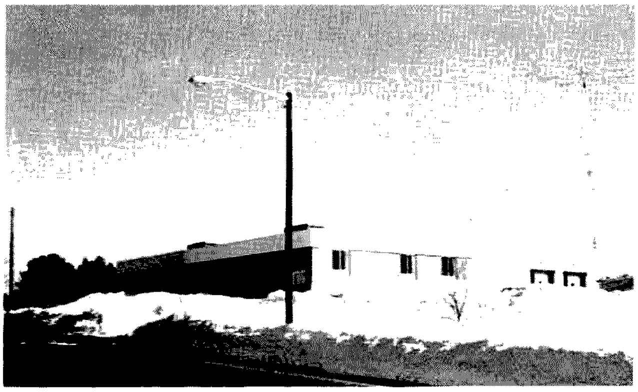

Overall view of the Cushcraft plant, located in an industrial park just south of Manchester, the largest city in New Hampshire.

By an odd coincidence, right across the street from Cushcraft is Infotecs, an innovative firm in the microcomputer field which was written up in the May issue of Kilobaud. Infotecs is the first firm to come along with a complete microcomputer package for an individual industry—the fuel oil delivery business. Their low cost and incredibly complete combination of computers and programs have been revolutionizing the fuel oil business in New Hampshire and have already spread to nearby states, with Infotecs' ability to meet the demand being the controlling factor in their growth.

Harry D. Hooton W6TYH
1420 Shamrock Lane
Lincoln CA 95648

Extended Double Zepp

—old-timer's delight still works

My first transmitting antenna, way back in 1929, was a full-wave centerfed radiator with open-wire line-tuned feeders, commonly known at that time as a "double Zepp." As amateur radio progressed, this antenna became known as a "pair of half waves in phase." Still later, another version appeared and was called the "extended double Zepp" antenna. The very latest version used 5/8-wavelength elements and had about 3 dB gain over a half-wave dipole. As any old-timer can tell you, these were potent DX antennas in their heyday, especially when you remember that 50 Watts was "high power" and the latest store-bought receiver was the National SW-3.

Strange as it may seem, the horizontal antennas to be described here were installed as part of a research project on phased and driven vertical arrays with which I was associated during 1976 and 1977. For this project, we needed several reference antennas with horizontal polarization and definitely known gain characteristics. It was desirable that the antenna gains were on the order of 0, 3, and 6 dB; it was essential for a "perfect" match to be obtained between each antenna, reference or otherwise, and its transmission line. The use of coaxial transmission lines was necessary so that we could switch the lines at the transmitter for "instant" comparisons between antennas. The first antenna installed was a half-wave dipole fed at the center with a 1:1 ratio toroidal coil balun and RG-11/U (75-Ohm) line. Since this antenna is not unusual in any way, it is not described here.

The Extended Double Zepp

The second reference antenna was the extended double Zepp with 5/8-wavelength elements. The design frequency for the 15 meter experiments was 21.3 MHz. Normally, the two 225° elements are each cut to a length equal (in feet) to 600/f, where f is in MHz. For 21.3 MHz, the elements L1 and L2 are each 28 feet, 2 inches long. Element lengths for other frequencies may be calculated or taken from Table 1.

In most handbooks, an open-ended stub is shown connected to this antenna at the center, as shown in Fig. 1 at "A". If the distance between the points "o"-"o" and "x"-"x" is equal to 1/8 wavelength, the impedance across the line at the "x"-"x" points will be about 120 Ohms. If you make the open-wire stub 3/8-wavelength long from points "o"-"o" to points "z"-"z", you can obtain any value of impedance along the line as you move from the open end of the stub (very high impedance) toward the point where the stub connects to the antenna elements (low impedance).

Since you need to use an RG-8/U (50-Ohm) coaxial line and a 4:1 ratio toroidal coil balun to match the line and antenna, you will find the appropriate 200-Ohm impedance point down the stub from the antenna at 6 feet, 10 inches. This point, marked "y"-"y" in Fig. 1, is correct for 21.3 MHz. For other frequencies, the distance between points "o"-"o" and "y"-"y" can be calculated from the formula in which the distance in feet equals 145.69/f, where f is in MHz.

If you use RG-11/U (75-Ohm) line, the correct

300-Ohm matching point will be a few inches further down the line in the direction toward the open end. It must be understood that these calculated points of attachment are intended to bring you within the ball park and, in some cases, may be exactly correct. However, the antenna must be resonated and matched as outlined below. The overall stub length for 21.3 MHz will be 15 feet, 4 inches. For other frequencies, use the formula in which the distance in feet equals 326.52/f, where f is in MHz.

The stub is constructed from two no. 12 copper conductors spaced 4 inches apart by means of porcelain spreaders. The two radiator elements are also made from the same size wire. Ordinary plastic-covered household electrical wire, obtainable at any hardware or electrical supply store, is suitable. If you cannot obtain the porcelain spreaders, use plastic rod or hardwood dowels to make the spreaders. In the "old" days, we used maplewood dowels and boiled them in linseed oil to prevent the absorption of moisture.

The Adjustments

The antenna system may be easily matched and resonated for optimum performance if you follow each step in order as follows.

Calculate the length of the two radiator elements and the matching stub from the formulas or select them from Table 1. Cut the wires about 2 or 3 inches longer than the calculated lengths to allow for trimming adjustments during the resonating process. Connect the stub to the antenna elements as shown in Fig. 1.

Calculate the distance of the 200-Ohm impedance point down the stub from the antenna. Once the point is located, peel the insulation from the two wires for a distance of about 4 inches on each side of the calculated and measured point. The output terminals of the balun are connected to the two bare stub wires with flexible leads not over 8 inches long and a pair of copper alligator clips.

Connect an swr meter in series with the coaxial transmission line and the balun input terminal (test point "A"). Raise the antenna at least 10 feet above the ground.

At the transmitter end of the coaxial line, apply a 21.3 MHz rf signal at a level of about 5 Watts. Adjust the swr meter sensitivity and/or the signal level until the swr meter indicator reads exactly full-scale "forward." Throw the swr meter selector switch to "reflected" or "reverse." The reverse indication should be much lower than that obtained with the switch in forward position, but the indicator may not read zero. Move the two alligator clips up or down the bare stub wires to locate the point where the reverse swr indication is the lowest.

The antenna should be pulled up to a half wavelength above ground while observing the swr meter reverse indication. If it is inconvenient to read the swr meter indication when the antenna is raised, connect a half-wavelength piece of coaxial line between the swr meter output terminal and the balun input terminal. Use any type of coax for the half-wave section and any impedance, but make sure that it is exactly a half-wave long. If it is, the swr meter readings will be the same as when connected to a balun input.

If you cannot obtain a complete null (zero indication) on the swr meter indicator by adjusting the two alligator clips, adjust the clips for the lowest indication. Now, trim an inch or so from the length of each radiator element and again adjust the alligator clips for a null. The clip adjustments are not very critical, but an inch or so removed from the radiators or the stub will have a very noticeable effect. By alternately trimming the radiator and stub lengths very carefully and sliding the alligator clips up and down the bare wires of the stub, you should be able to obtain a complete null on the swr meter indicator.

A complete null or zero reverse reading indicates a perfect match between the line and the antenna feedpoint, or an swr of 1:1. In our antennas, with a perfect match at 21.3 MHz, the swr was not more than 1.2:1 at the frequency extremes of the 15 meter phone band. The final adjustments are made so that the swr meter indicates zero reverse when the

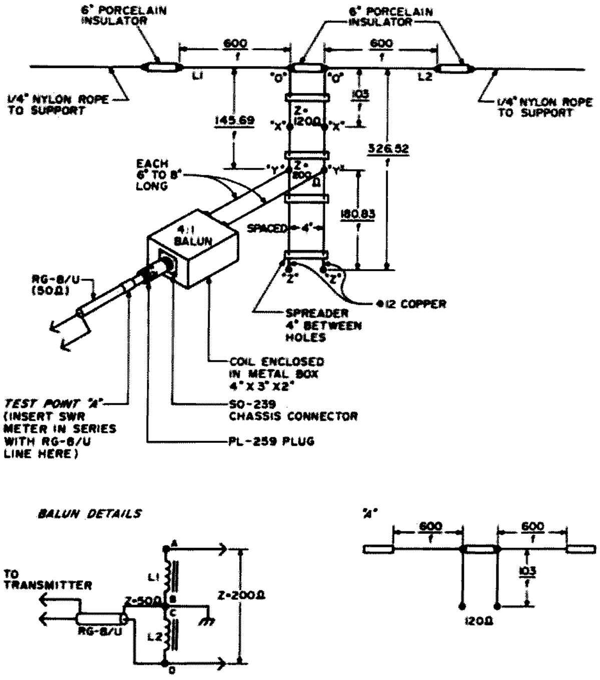

Fig. 1. Extended double Zepp antenna with coaxial line feed. Gain = 3 dB over half-wave dipole at same height; f = megahertz. Dimensions for 21.3 MHz—L1 = 28'2"; L2 = 28'2"; "o"-"y" (200 Ohms) = 6'10"; "o"-"z" = 15'4"; adjust "o"-"z" dimension and "y" positions for lowest swr at test point "A". L1-2—two 13-turn coils #12 copper, Teflon™ insulated bifilar wound on 2" powdered-iron core (T-2).

Frequency	L1	L2	o-x	o-y*	o-z
3.750 MHz	160'	160'	27.47'	38.85'	87.0'
7.150 MHz	84'	84'	14.41'	20.38'	45.67'
14.175 MHz	42.3'	42.3'	7.27'	10.28'	23.0'
21.300 MHz	28.17'	28.17'	4.84'	6.84'	15.33'
28.600 MHz	21.0'	21.0'	3.60'	5.09'	11.42'

*Table 1. These dimensions are for the antenna shown in Fig. 1. *Adjust as required. See text.*

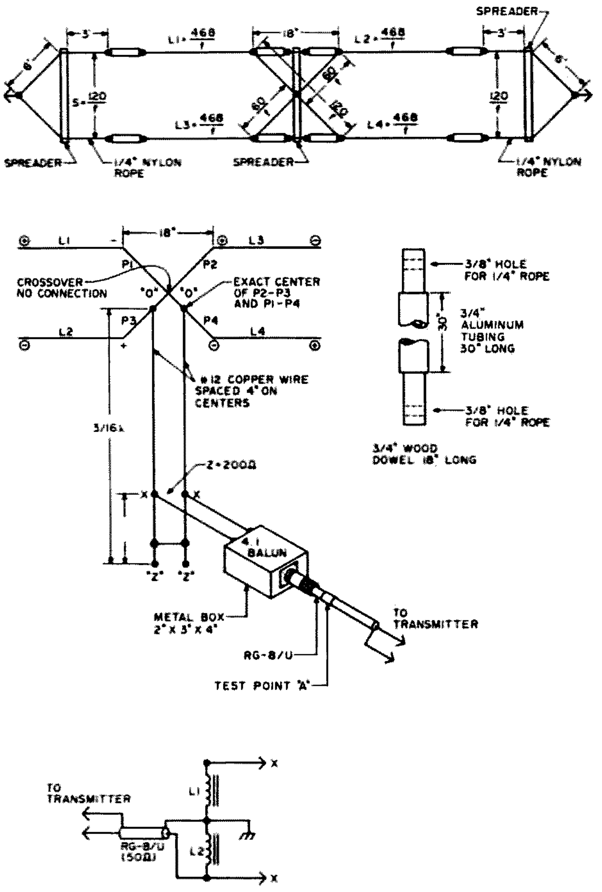

Fig. 2. Four-element array. Gain = 6.2 dB over a half-wave dipole at same height. Dimensions for 21.3 MHz—L1 = 22'; L2 = 22'; L3 = 22'; L4 = 22'; S = 5'7-1/2"; stub (3/16λ) = 8'5-1/2" between point "o"-"o" and "z"-"z"; 200 point = 24" between "x"-"x" and "z"-"z". For other frequencies, use the formulas. L1-2—13 turns each bifilar wound on 2" powdered-iron (T-2) core. Use #12 or #14 copper wire with Teflon insulation. Enclose it in a 2" × 3" × 4" metal box.

antenna is suspended a half wave (about 23 feet for 21.3 MHz) above the earth.

The Four-Element End-Fire Array

Back in the "stone age" of amateur radio, this antenna was generally called an "8JK beam" after the amateur (John D. Kraus W8JK) who originated and publicized it in the technical journals. The version shown in Fig. 2 consists of four half-wave elements—L1, L2, L3, and L4. When the phasing section is connected as shown, elements L1 and L4 will be excited in phase. Elements L2 and L3 are also excited in phase. However, the currents flowing in L1 and L3 and the currents in L2 and L4 will be out of phase by 180° (observe the instantaneous polarity symbols in Fig. 2).

This type of arrangement produces what is called an "end-fire" array. Maximum radiation will take place along a line through the plane of the radiators and at right angles to the four elements. The pattern is bidirectional, and the gain over a half-wave dipole at the same height is about 6.2 dB. Until now, the big drawback with this antenna was that all published designs showed the use of cumbersome tuned feeders or 600-Ohm open-wire lines. In this array, the method of feed is even easier to adjust than that of the extended double Zepp antenna previously described.

The four radiator elements must be exactly the same length. Use the half-wave formula in which length in feet equals 468/f, where f is in MHz. For 21.3 MHz, each element is 21.97 (22) feet long. If the elements are cut precisely to this length and the array is erected exactly one-half wavelength above electrical ground, no adjustments of the element lengths are necessary. The phasing harness conductors P1, P2, P3, and P4 must be exactly equal in length. The distance from each stub connection point out to the element connection must be precisely the same, or the array will be unbalanced and incorrectly phased. Incorrect phasing will reduce the gain and may cause other problems.

For stub design purposes, the distance from the stub connection on the phasing harness conductor to the element connection is considered to be 1/16 wavelength. The entire phasing harness is looked upon as two 1/16-wavelength transmission lines in parallel. Therefore, if you make the impedance matching stub equal to 3/16 wavelength as shown, you can connect an adjustable "short circuit" (jumper wire) across the lower end of the stub and use it to resonate the array. Since the 1/16-wavelength phasing harness plus the 3/16-wavelength stub equals 4/16 wavelength, or 1/4 wavelength, the "shorted" stub will have a low impedance value at the bottom and a high impedance value at the top. As a result, you can obtain any impedance value by tapping across the stub at the appropriate point along the line.

The 200-Ohm impedance point for the connection of the balun output terminals is about 24 inches up the stub from the jumper wire. Again, I want to emphasize that the impedance connection points are only approximations. Bare the stub conductors and slide the alligator clips up and down for lowest swr indication in the coaxial line at test point "A". If a complete null cannot be obtained with the alligator clip adjustments, move the jumper wire up or down the stub and readjust the clips until a reverse zero swr meter indication is obtained. Once the correct adjustments have been made, solder the jumper wire across the stub and clip off the unused ends of the stub. At the balun connection, remove the alligator clips and solder the balun output leads directly to the stub conductors at the exact points where the clips were attached. The final adjustments should be made with the elements suspended a half wavelength above ground.

Summary

These antenna systems are actually much easier to adjust than the above description might indicate. The only test equipment required is an swr meter and a low-power signal source whose frequency can be accurately controlled. The average Novice should be able to construct and adjust these "beam" antennas if the instructions are carefully followed. The extended double Zepp antenna will effectively double your radiated power. The 4-element job will give you an effective radiated power gain of four times. All references are to a half-wave dipole at the same height. ■

New Dipole Feeder

—tuned feeders, yet!

A. F. Stahler AA6AX
5521 Big Oak Drive
San Jose CA 95129

A previous article[1] of mine described the T^2LT (Tuned Transmission Line Trap), its construction, and its use to prevent feedline radiation when used with a centerfed horizontal dipole. There are many applications for this unique device. The object of this article is to describe the use of the T^2LT to end feed either horizontal or vertical dipoles.

Fig. 1 shows a sketch of the T^2LT used to end feed an antenna. The coil is made of the shield of the coaxial feedline; the capacitor is the value required to resonate the coil at the operating frequency. The number of turns in the coil may be as few as one. With a low number of turns, the resonating capacitor will be large, the Q high, and the bandwidth narrow. The antenna performance increases with the Q of the T^2LT.

The T^2LT operates in this application because of the ability of coaxial cable to simultaneously carry differing currents on the inside and the outside of the shield of the coax. Usually, a current flowing on the outside of the shield of a coaxial cable is undesirable. However, in this case, this outer current is the antenna current of one side of a half-wave dipole, and it is required for the unit to operate as a half-wave antenna. Fig. 2(a) shows the current distribution in a half-wave dipole, and Fig. 2(b) shows the corresponding current distribution in the T^2LT endfed dipole. To behave as a half-wave dipole, the T^2LT endfed antenna must have the same current distrubution on the outside of the coax shield as the dipole of Fig. 2(a). In particular, this current must go to zero at the ends of the dipole. The end of the wire insures zero current at the far end of the half-wave antenna, but the characteristic of the current at the T^2LT end depends upon the impedance of the T^2LT.

Impedance is defined as the ratio of the voltage to the current. Since the current at each end of a dipole antenna is zero, the impedance at the

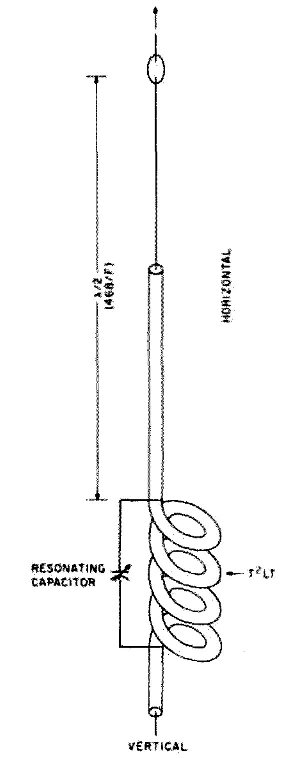

Fig. 1. The T^2LT endfed antenna.

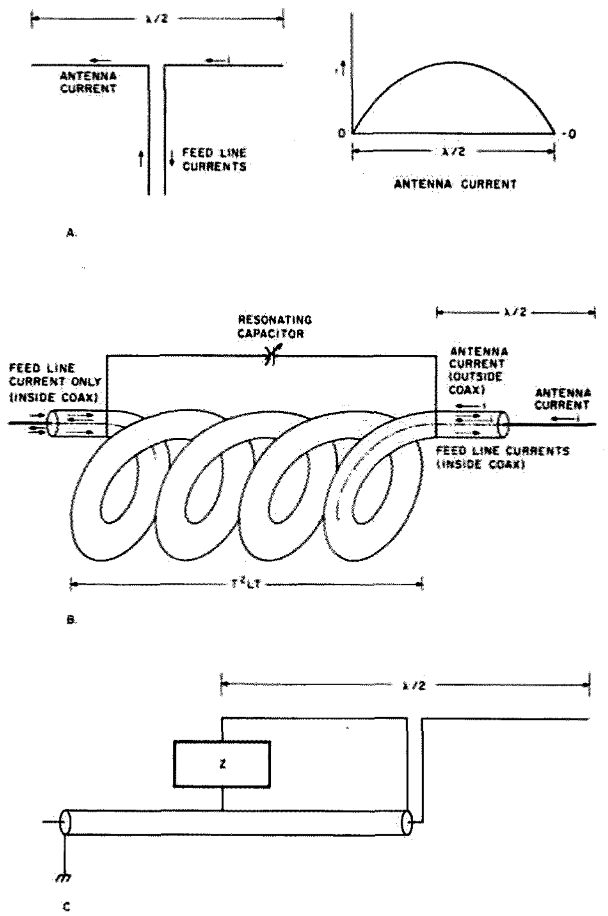

Fig. 2. Antenna current distributions. (a) Dipole currents. (b) T^2LT currents. (c) Equivalent connection – endfed dipole.

ends of a dipoie antenna cannot be defined. The only impedance that can be connected between the end of a dipole antenna and ground, without changing the current distribution of the antenna, is an infinite impedance. A parallel resonant tank circuit, theoretically, has infinite impedance across its terminals. Real, high-Q resonant tank circuits can have an impedance greater than 100,000 Ohms. A low-loss high-Q T^2LT can, therefore, approach the desired infinite impedance.

Fig. 2(c) shows, topologically, how the impedance of the T^2LT is connected to one end of the half-wave dipole antenna. Fig. 3 shows the radiated power, measured at a distance of 10 wavelengths, from a 20 meter dipole as a function of the impedance connected between ground and one end of the antenna. Here it can be seen that a very high impedance is required of the T^2LT if the antenna is to perform properly.

Some authors[2,3,4,5] have described an endfed dipoie with an rf choke instead of a T^2LT. These authors incorrectly presumed that the impedance at the end of a half-wave dipole antenna was defined and was approximately 4,000 Ohms. This, however, is the impedance of a half-wave radiator fed against an ideal ground plane,[6] not the impedance at the end of a half-wave dipole. Fig. 3 indicates why these previously published designs of endfed dipoles have never become popular.

On the contrary, my T^2LT vertical antennas have given excellent DX performance. Using a 2-Watt HW-7 on 20 meters, I consistently receive an S-8,9 report from VE6s in Calgary. That must be where the first skip lands.

Captain Lee[7] discusses the advantages of a ground-isolated vertical dipole but adds, "How one is to feed this antenna from a practical standpoint is never mentioned." I say, do it with a T^2LT! The T^2LT-fed vertical is ground independent and thereby avoids the extensive ground system required for conventional verticals.[8] This antenna permits DX performance when using battery-powered, portable — even QRP — equipment. I have successfully used the T^2LT to feed shortened antennas, less than $\lambda/4$ in length, which answers the height problem associated with a half-wave vertical. The shortened antenna requires an appropriate unbalanced to unbalanced impedance matching transformer at the dipoie center.[9]

Photos A and B show details of a T^2LT endfed antenna that was hastily constructed for OSCAR downlink communications. The T^2LT is simple to build, easy to adjust, and it outperforms conventional vertical antennas. ■

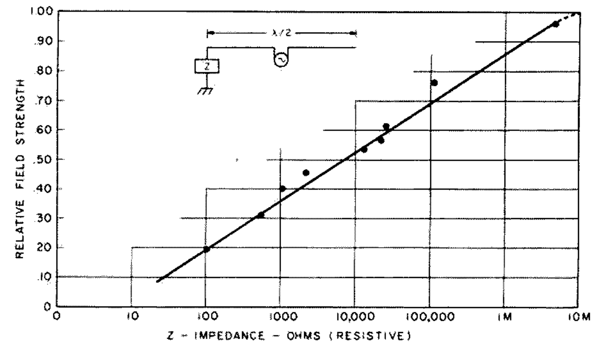

Fig. 3. Field strength as a function of impedance between dipole end and ground.

Photo A. T^2LT of 10 meter vertical dipole.

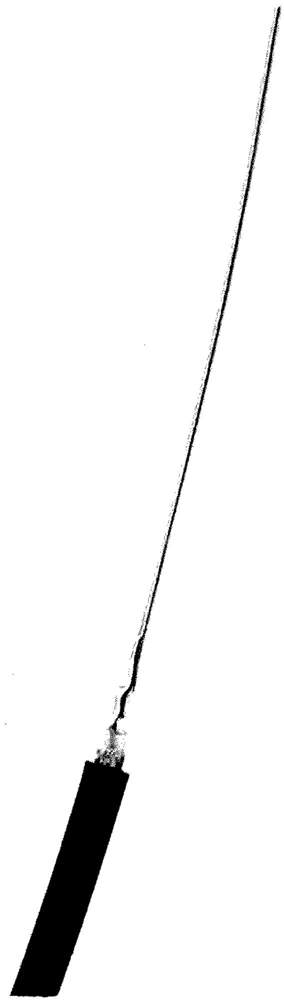

Photo B. Electrical center of T^2LT vertical antenna.

References

[1] Stahler, A.F. "Catch Standing Waves," *73 Magazine*, Holiday, 1976.

[2] Orr, Wm. I. W6SAI, "Simple Low Cost Wire Antennas for Radio Amateurs," *Radio Publications, Inc.*, 1972, pp. 113-114.

[3] Orr, Wm. I. and Stuart D. Cowan, "The Truth About CB Antennas," *Radio Publications, Inc.*, pp. 154-155.

[4] Kuecken, John A., *Antennas and Transmission Lines*, Howard W. Sams & Co., 1969, pp. 248-253.

[5] Brueckman, H., "Theory and Performance of Vehicular Center-Fed Whip Antennas," *IRE Trans. Vehicular Comm.*, Vol. VC-9, December, 1960, pp. 10-20.

[6] King, R., *The Theory of Linear Antennas*, Harvard University Press, Cambridge MA, 1956.

[7] Lee, Paul H., *The Amateur Radio Vertical Antenna Handbook*, Cowan Publishing Corp., 1974, pp. 17.

[8] Sevick, J., "The W2FMI Ground-Mounted Short Vertical," *QST*, March, 1973.

[9] Sevick, J., "Broadbank Transmission Line Matching Networks," *Present and Future Trends in Communications Equipment Design*, 20-3, I.E.E.E., 1976.

Thomas Cirillo WA2UVC
(Address withheld)
New York NY 10010

The Cliff-Dweller's Delight

—how to operate from an apartment

For years, numerous hams have tried to solve the perennial problem of the apartment-dwelling amateur and the severe restrictions on antenna design and effectiveness which result from his environment.

Some of the more successful approaches have been published; however, I have invariably noticed something peculiar about most of them. It seems that in an attempt to meet all of the apartment dweller's requirements (invisibility, low cost, reasonable effectiveness, easily accessible materials, etc.), one finds a "hidden requirement." This is often in the last sentence of the article, where the author indicates that 18-karat gold was used throughout due to its fine properties (including conductivity), or that the author's apartment shack is located a short distance from Mt. Everest.

I have been faced with these same problems for many years and have discovered a completely satisfactory solution which has been in use for approximately two years. The primary design consideration was inconspicuousness, for getting involved with the landlord or superintendent was out of the question. Although the other criteria were relegated to lower priorities, this approach does satisfy all of them.

This antenna approach involves the use of a Hustler mobile antenna (and its associated resonators, for each band), horizontally polarized, working against the building as ground.

Early experimentation indicated that a quarter wavelength antenna, horizontally polarized and working against the building as a ground plane, was surprisingly effective. However, at 20 meters and lower frequencies, antenna length becomes a prohibitive factor. These results, coupled with my experiences working mobile stations, led me to try the Hustler. It (or another similar antenna) is ideal.

Mounting this antenna horizontally proved to be a reasonable challenge. At first, I used a swivel-type ball mount on a block of wood, swiveling the antenna against the building when not in use. This was crude and caused me great concern about structural integrity! I then stumbled upon the Hustler quick-disconnect mount. Success!

With the quick-disconnect mount, the entire antenna and resonator can be removed and kept indoors when not in use, satisfying my first criterion. I keep this quick-disconnect on a fixed ball mount, which is in turn fastened to an aluminum minibox (about 1" x 3" x 3") permanently attached to my windowsill. The ground side of the antenna is connected to my metal window frame, which, although small, works quite well. I have also used a counterpoise with equal success. My swr is about 1.3 to 1.

How effective can this crude, inexpensive, expeditious "apartment dweller's beam" be? Judge for yourself. My antenna is fed through fifty feet of extremely lossy RG-58U and is driven by a TS-520, barefoot. I spend little time DXing, yet still have been able to work about fifty countries over a few months. Surprised? So was I; however, consider the following: Before I had acquired the TS-520, my only rig was a Heathkit HW-7 (*2 Watts out*) and I logged ten states in just a few days using this same antenna! Prior to this antenna, DX meant working Staten Island (I live in Manhattan).

One other thing. If you're not comfortable letting the antenna "dangle" by its mount, you can support it further using nylon fishing line, fabricating non-metallic hooks for easy removal.

Needless to say, the overriding advantage of this antenna approach is that it is removable. By simply opening your window and twisting the quick-disconnect mount, it's gone. If you're daring, use it during the day. Otherwise, wait until the sun sets and fire up the rig.

In summary, let me say that there is a tremendous difference between a 5 by 7 from Queens NY and the sound of disbelief in the voices of the UKs and ZLs I've QSOed with recently when I've told them about my shack.

Try it. This may finally be your way out of the apartment dweller's dilemma. (No, I don't live at the top of the Empire State Building!!!)■

Don Walters WA8FCA
2849 Verle
Ann Arbor MI 48104

Wait Till You Try 16 Elements!

—15 dB gain on 2m is a real kick

Operating on 2 meter FM, I needed a better antenna than my little 4-element commercial beam if I wanted to be able to put an acceptable signal into the WR8AAA 146.19-.79 repeater in Milford, Michigan, a distance of about 30 miles from my new QTH. If the 4-element beam was up on a 40-foot tower, I probably would not have any problems making it into the Milford repeater. However, I wasn't ready to put up a tower yet. I had to put up an antenna with more gain because the antenna would be mounted only about 20 feet above the ground.

The next problem was money. I did not want to spend a lot of money on a multi-element commercial beam.

Well, if I wasn't going to buy a beam, I would have to build one. So I started looking through the *ARRL Antenna Handbook* and many an old ham magazine. Nothing I saw seemed to fit my needs. Either the mounting hardware of the antenna elements looked too complicated to fabricate, or the antennas were designed for 300-Ohm feedline. Of course, 300-Ohm feedlines can be dealt with with baluns, but I wanted to use coax throughout, since I wasn't worried about the dB or so I might lose through the coax cable.

I finally found what I wanted in an article in *73 Magazine*, June, 1975.[1] The article described and even gave exact dimensions for 6- and 8-element 2 meter beams cut for operation at 146 MHz. Their construction methods and materials were simple and low cost (coat hangers and PVC pipe).

With a good design to work with, I could now tackle the materials problem. Our household always seems to be lacking coat hangers, so another antenna element material would have to be found. While visiting a local hardware store, I found some 3/16-inch-diameter medium steel wire in a 50-foot coil for less than $3.00. While at the same hardware store, I also decided to use 1-inch-diameter aluminum tubing for the boom, rather than use PVC pipe as was used by the authors of the antenna article.

With antenna materials in hand, it was time to start building the antenna. The first problem was to straighten out the coiled wire and cut it up into the lengths of each one of the antenna elements of the beam. For the first couple elements, I used a heavy pair of diagonal cutters to snip off the antenna element from the rest of the wire coil. With my hand cramping from cutting the wire, I decided that there must be a better way to cut the wire. After some thought, I decided to try a small tube cutter on the wire. This little tool turned out to work quite nicely and worked better than the diagonal cutters.

With all the antenna elements cut to size, the next problem to overcome was how to mount the antenna elements to the boom. I first thought about drilling a hole through the center of each element and then bolting the element to the boom. However, the single hole through the element seemed like it might not be very stable when mounted to the antenna boom. After some more thought, I came up with the mounting clamp arrangement shown in Fig. 1. The clamps

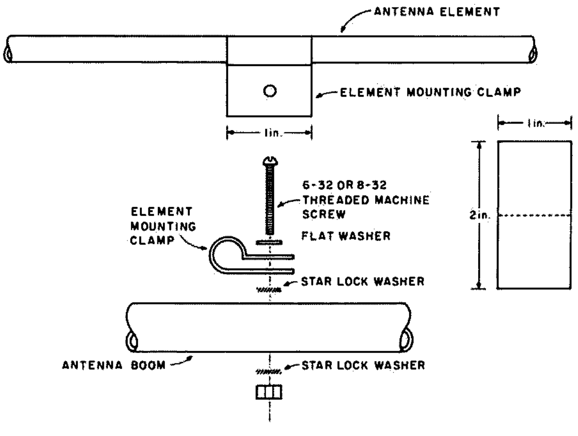

Fig. 1. Antenna element mounting details.

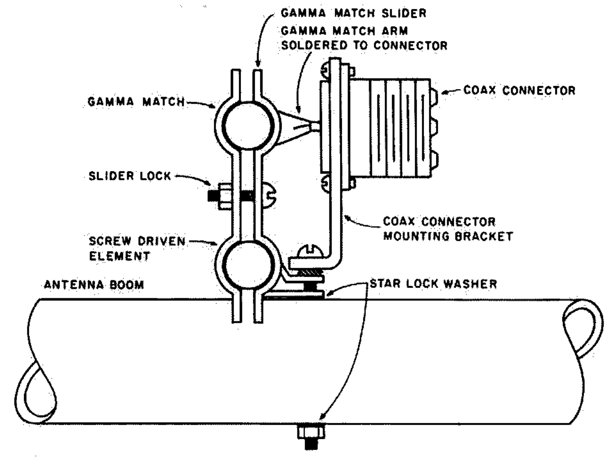

Fig. 2. Driven element — gamma match details.

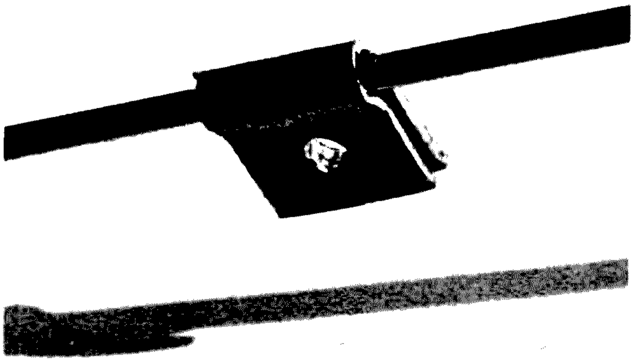

Antenna element mounting clamp.

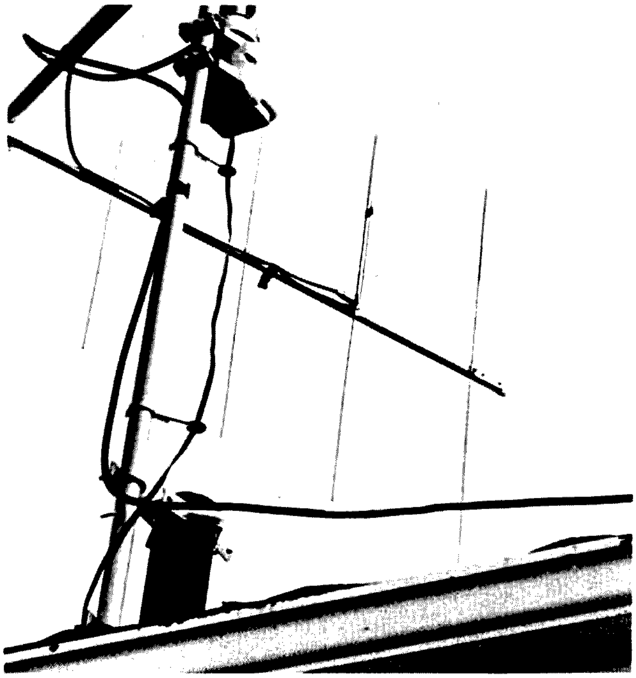

Driven element – gamma match arrangement.

are made by cutting a 1-inch by 2-inch by 1/16-inch strip of aluminum and bending it, from the middle, around the center of the antenna element. Each one is clamped tightly around the antenna element by pressing the clamp-element arrangement in a vice. Once the clamp has been formed over the antenna element, a mounting hole is drilled in the top of the center of the flat portion of the clamp. The hole drilled in the clamp should be just large enough to accommodate the mounting machine screw. Each element of the antenna is fitted with an element clamp, including the driven element, which should be cut as one piece rather than two dipole quarter-wave pieces, as was described in the original article.

Since a 10-foot length of 1-inch-diameter aluminum tubing is not too easy to find, two shorter pieces can be joined together to form the 10-foot boom. Joining the two pieces of tubing can be done in several ways. However, one of the better ways of doing it is to take a one-foot length of tubing of the same diameter and slice the tubing along its length. Then fold one of the sides along the cut under the other, which makes the tube diameter somewhat smaller than it was. Slide the length of tubing into one of the lengths of tubing to be joined until the smaller diameter tube is about halfway into the longer piece of tubing. Then slide the other half of the antenna boom over the smaller diameter tubing. Drill two holes through each end of the joined pieces of tubing so that the holes are spaced about four inches apart and are also drilled through the smaller diameter tubing now inside the boom pieces. Put machine bolts through the holes and tighten them down. The antenna boom is now assembled and rigid enough to be used for the antenna. As an alternative to an aluminum boom, a 10-foot length of 1 x 1 inch wood could be used for the boom after it is treated with several coats of varnish.

The antenna went together easily and took about eight hours to make. Now the only problems to tackle are the ones that will undoubtedly show up (courtesy of Murphy). Sure enough, the first problem appeared after the antenna was put together. I had originally built the driven elements as two separate quarter-wave sections, as per the design in the original article. Even though the driven element was of the proper length electrically and physically, its swr was very high (about infinity to one). This seemed to indicate that the driven-element impedance was no longer about 70 Ohms. A quick check with one of the local antenna design experts, Sam Brooker WB8RFA, via the local WR8ADH repeater, confirmed that the dipole driven element would not have a 70-Ohm impedance when it was mounted with the rest of

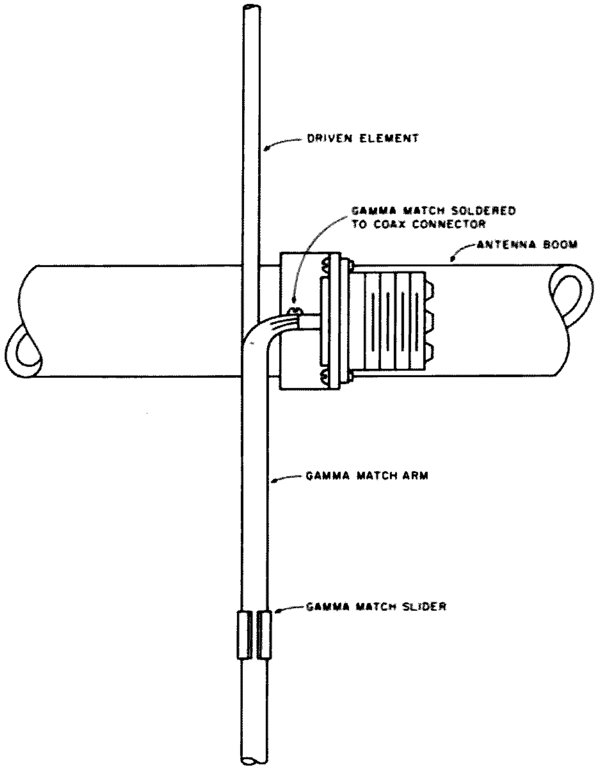

Fig. 3. Driven element – gamma match details.

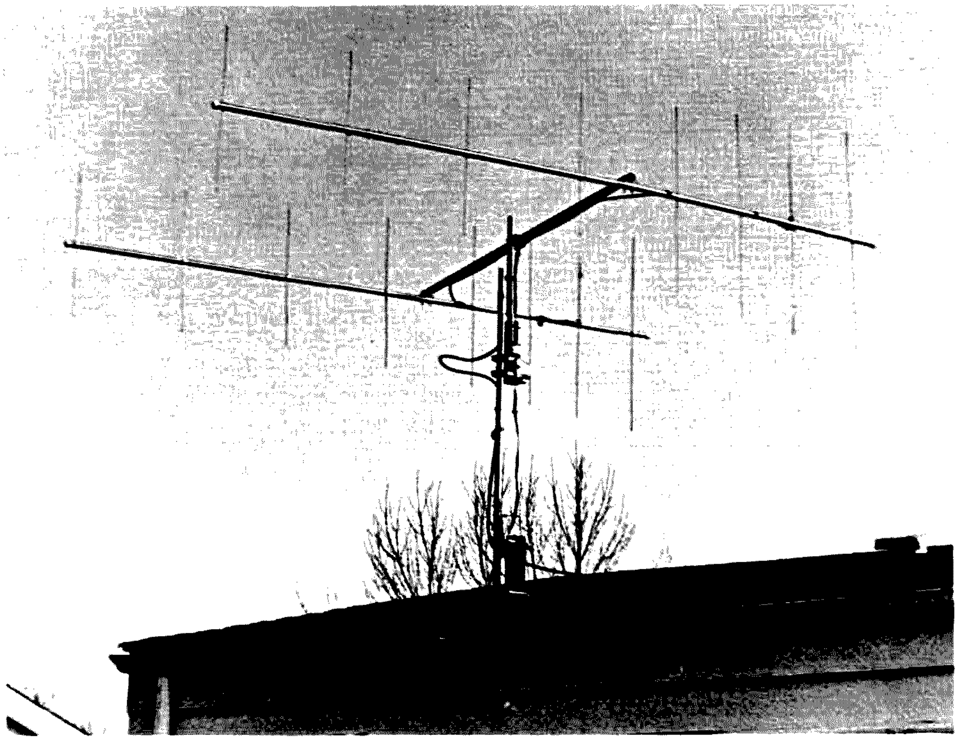

The completed eight-element stacked antenna system.

the elements. So the driven-element design would have to be changed. I decided to use a single-piece half-wave driven element which used a gamma match for matching the feedline to the antenna. Figs. 2 and 3 give the details on the driven-element/gamma-match arrangement used in the antenna. The new driven-element/gamma-match arrangement worked well and had an swr of about 1.1:1 at 146.52 MHz and stayed below 1.5:1 over the 146.19-146.94 MHz frequency range.

The next problem was how far apart should the two beams be – a quarter, a half, five-eights, or a wavelength? A look through the *ARRL Antenna Handbook* and the VHF manuals didn't turn up any definite stand on what spacing to use. Experience came to my rescue again. Another conversation with WB8RFA helped solve the spacing question, as well as some questions on phasing harness lengths. It seems that Sam had run into the same sort of decisions and questions when he put up his twin 11-element beams. It seems that common practice is to space the beams a wavelength apart; the theory and exact reasons are beyond the scope of this article. Fig. 4 gives the details of the beam spacing and mounting arrangement I used. This mounting arrangement seems to work out well, since it has survived mild icing and winds up to about 40 mph.

Interestingly enough, the *ARRL Antenna Handbook* and VHF manuals had very little on the added problems of stacking beams. The publications did mention open line feeders between arrays stacked at some optimal spacing. All the VHF antenna systems I have seen used coax for the phasing harness between each antenna and down to below the rotor. Below the rotor, I have seen both coax and 300-Ohm open feedline used for the run down to the shack. However, I could not find any information on how to calculate the length of each leg of the phasing harness. As I have previously mentioned, WB8RFA also gave me the necessary details on how to calculate the length of each leg of the phasing harness. Fig. 5 gives the details of the phasing harness arrangement and the calculations for the phasing harness leg lengths. The length of each leg of the phasing harness is calculated by: (.66) ($\lambda/4$) x odd multiples of $\lambda/4$. Since (.66) ($\lambda/4$) at 146 MHz is short, the value must be multiplied by an odd number of quarter wavelengths in order for the phasing harness to be long enough to reach from each antenna's driven element, along the antenna boom, and back to the feed coax cable at the support pole at the rotor. In my stacked antenna system, I needed 5 quarter wavelengths for each leg of the phasing harness, in order to route the cable along each antenna to the center support pole and T-connector. My proof that the phasing harness works is that the swr didn't change when the phasing harness was hooked

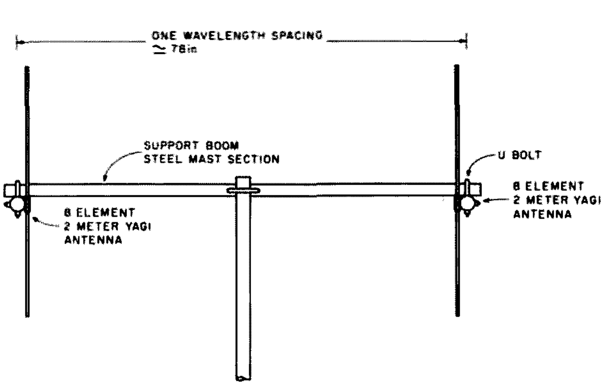

Fig. 4. 8-element 2 meter antenna stacking details.

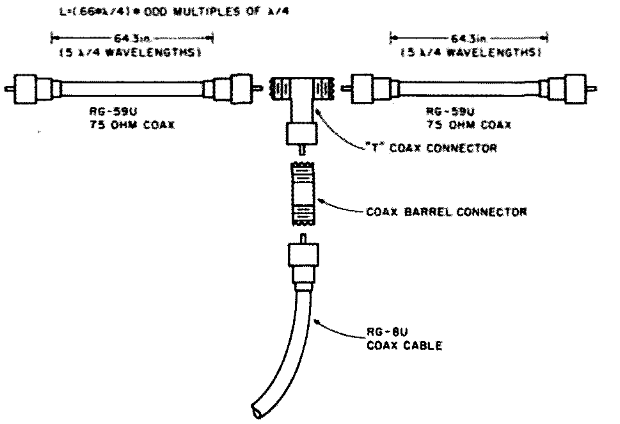

Fig. 5. Phasing harness details for stacking two 2 meter yagi beams.

up, which probably would not be the case if there was a mismatch in the phasing harness. I would like to point out that, once the antennas are stacked, each antenna's gamma match should be adjusted for minimum swr before the phasing harness is attached.

Conclusion

The antenna array (two stacked 8-element beams vertically polarized) is doing the job it was built to do, which was to put an acceptable signal into the 146.19-.79 Milford repeater from my new QTH, even though it is only 20 feet above the ground. Additionally, I now have extended simplex range so that I can move off a repeater frequency pair and rag chew with the locals running only low power (1 Watt).

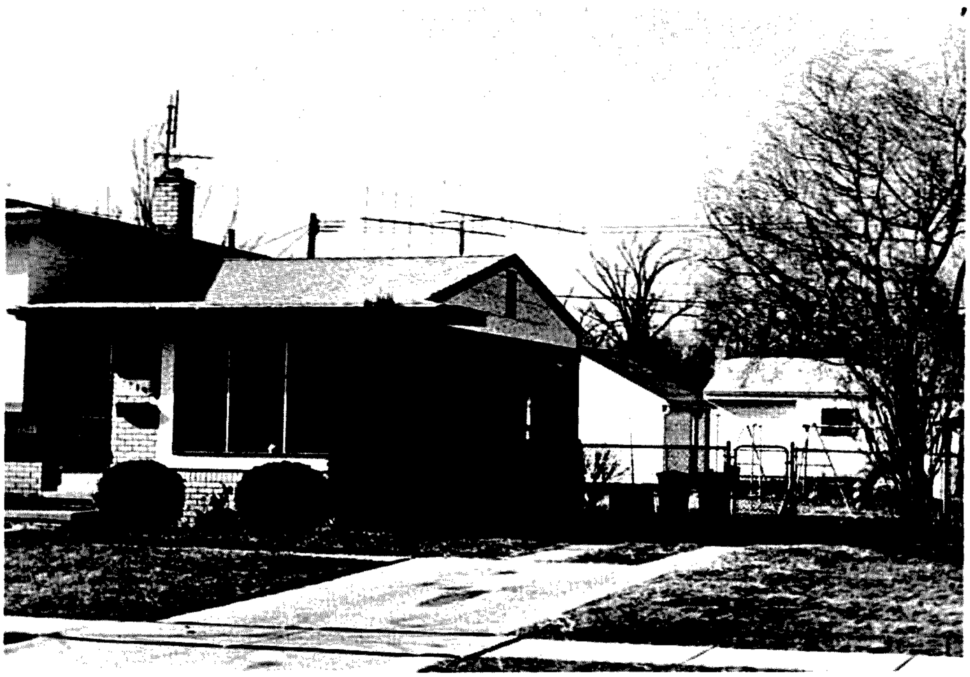

View of the antenna system mounted on my QTH.

Since I have not run quantitative tests on the antenna system, I am not too sure what my actual gain and front-to-back ratio are. However, I can guess. The original article claimed 12 dB gain for the eight-element beam, with a front-to-back ratio of 14 dB. Assuming my antennas come close in performance to those of the authors, I should have about the same gain and front-to-back ratio for each antenna. Stacking beams is supposed to provide an additional 3 dB of forward gain, so my stacked beams should have a forward gain of about 15 dB. I tried putting a dipole and my commercial 4-element beam at the same height as the stacked beams and did a comparison of how well each would pick up the Milford repeater. With the dipole, I could not key up nor receive the Milford repeater. With the 4-element beam, the Milford repeater signal was pushing the transceiver's S-meter about 1/8 of the meter's full scale. When the stacked eight-element beams were hooked up to the transceiver, the S-meter went up to over 3/4 of the meter's full scale. I could key up the Milford repeater running 1 Watt (10 Watts was needed for reliable communications, though), as well as receive the repeater almost full quieting. So my attempt at building beam antennas seems to have been successful.

Although I feel my construction materials and techniques produced a mechanically better antenna than those of Anderson and Atkins, my costs were somewhat higher, also. Each eight-element beam cost about $10.00, which is about $8.00 more than using coat hangers and PVC pipe. The total cost of the stacked-beam system was about $30.00, which included the cost of each eight-element beam, the phasing harness materials, and the stacking support boom. This price, though, is much, much cheaper than the cost for a comparable commercial eight-element stacked antenna system. Additionally, my construction methods for the 2 meter beams would be suitable for building beams at 220 MHz and at 432 MHz.

But, best of all, I suppose, is that it continuously amazes me every time I come home and look at the good-looking 2 meter stacked beams on the roof of my house and realize that I made them. ■

Reference

1. "Build an 11 dB Coatrack," Kelly Anderson WB0DQC and Walter Atkins, Jr. WB0HKB, *73 Magazine*, June, 1975, page 111.

LETTERS

from page 12

realize just how obnoxious it must seem when we rob the rest of the world's hams of precious band room with our elephantine QRO signals.

And what do you lose when you go QRPp? Well, your station won't impress the CBer down the street unless he's really got his head together. And you won't crash through the QRM the way you once did. And you will really have to "go with the flow" of skip conditions if you want to make the trip to DX land. Perhaps that's just too great a sacrifice. You decide. I'm not saying that there is anything intrinsically immoral about high power. It is simply out of step with today's attitudes about energy efficiency. And the kind of operating that it seems to foster is simply unacceptable to hams of a gentler persuasion.

Troy Weldenheimer W0ROF
Ballwin MO

As editor, I get first crack at Troy. I've been the QRP route and I agree that it is fun. But I've also been the kilowatt route and that's fun, too, if different. With low power, you frequently have to settle just for getting through for a fleeting minute or two . . . enough to get a QSL card. If this is your bag, fine. My own preference is to be able to talk at length with people in odd places and get to know them a bit . . . to strike up friendships. The chances of doing this on 20m with 20 Watts is small . . . I ran that power for a few years, so I know about it.

Another thing. When you are operating from remote areas, you find that radio conditions are such that you hear the big signal boys every night. The

Continued on page 56

Dan Umberger W8ZCQ
2753 Elliott Ave.
Columbus OH 43204

Working 15m With A 20m Beam

—*by adding three more elements*

Every amateur knows he is going to lose an antenna system sooner or later. My "later" came in the form of a terrific thunderstorm on Easter Sunday, 1974. The storm, brief but fierce, left the antenna system looking like a pop art creation. The top of the mast was bent 45°, the 20 meter monobander looked like it was trying a three-cushion moonbounce shot, the 10 meter beam was twisted 90° on the mast, and parts of the 15 meter beam were either blown away or pointed lengthwise with the beam.

The 10 and 20 meter beams were not particularly damaged, but the 15 was "over the hill." It did not take long to replace the drive pipe and reinstall the 10 and 20 meter beams and I was back in operation on those bands.

My first idea was to build a 15 meter beam from scratch, but I looked at that nice long boom on the Mosley A-203-C and it seemed to be performing no particular function other than holding the elements apart. Why not put the middle of it to work and let it support a 15 meter beam? A look at the physics indicated it would do the job if the mechanical weight and wind load were kept at a minimum.

The primary consideration, and an absolute must, was that the addition of the 15 meter beam could not reduce the effectiveness of the 20 meter beam! Being of the "reverse engineering" type, I build first and design from the results. I was prepared to remove the 15 meter elements if there were the slightest ill effects on the operation of the 20 meter beam. Happily, this was not necessary. The effects on 20 were negligible.

The mechanical details were no problem. The wind load factor dictated that the element diameter be kept as small as feasible. A check with the aluminum department of a metals supply house disclosed that .058" wall thickness tubing was available in diameter increments of 1/8" across a wide range and this tubing telescoped snugly into the next size. This is in 6061-T6 alloy and is commonly referred to as "tempered aluminum." They demonstrated that it could be bent double and would spring right back into shape! Cautiously, I asked the price. It was selling for $4.51 a pound. The wind load factor took on increased importance! The standard length is 12 feet. I decided on 5/8" for the center and 1/2" for the extensions. Three pieces of each would be required. I went home with my bundle of tubing and the project was under way.

I dug into my antenna library and could find little or no reference to common boom antennas. I knew there were many factors involved after reading the work of Shanklin, Greenblum, and Gillison, relating to height, spacing, and element diameter. The complexity threw me. I had about decided to start with the formulas in the antenna handbook when the June, 1974, *QST* arrived with the writeup on the Wilson Electronics DB-54 Duo-Band Antenna by W1FBY in it. I was quite amazed that their element lengths were considerably

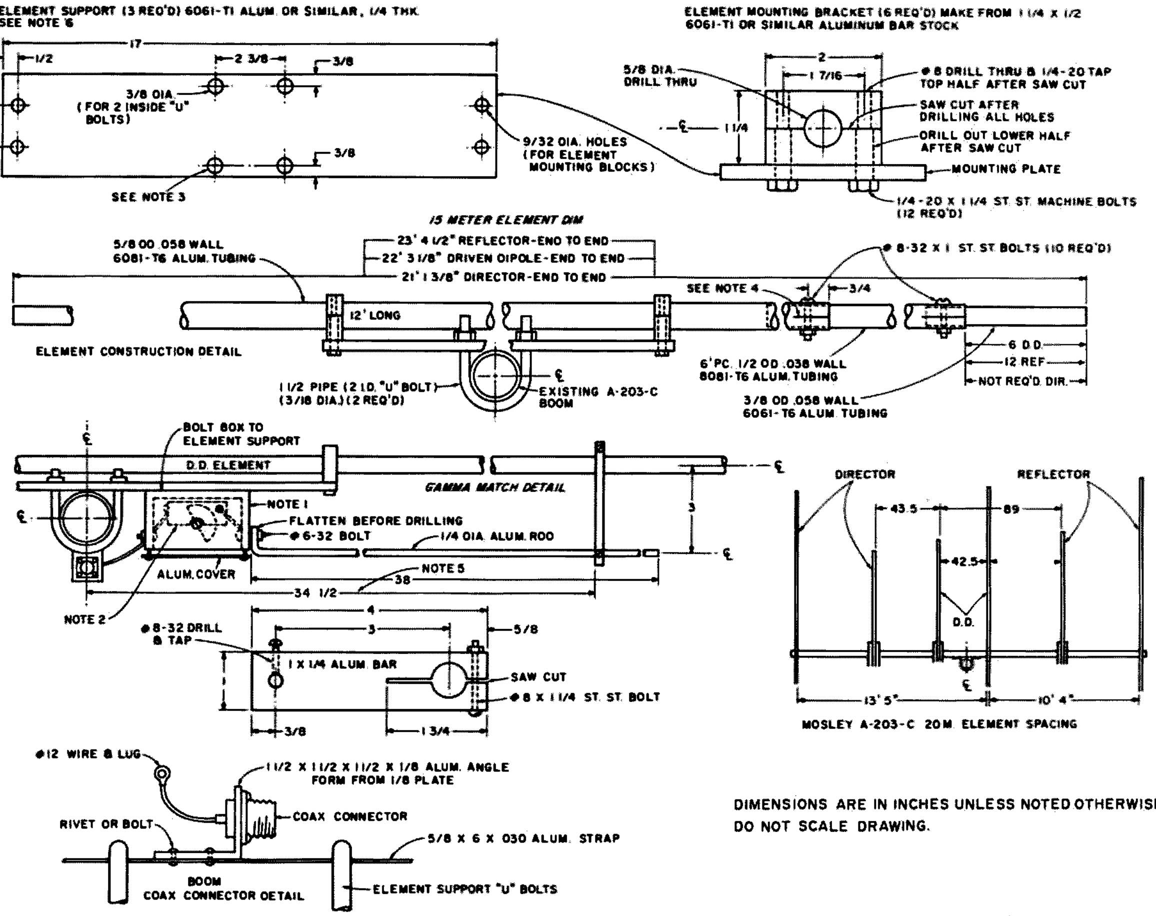

Notes

1. 2" x 6¼" x 3½" Bakelite™ box – Radio Shack stock 270 627.
2. Small variable capacitor about 150 pF medium spacing.
3. If boom diameter is other than 2", drill these holes to mate with the required U-bolts.
4. Saw slot to depth of 1¼" to permit the screw to clamp the tubing tightly.
5. Gamma match 26-5/8" for 2 element.
6. Supports sawed from plate. If necessary to purchase, stock width is either 3" or 4".

Fig. 1. Conversion of the Mosley A-203-C for 15 meter capabilities.

longer than those computed from the ARRL *Antenna Handbook*. Since spacing of elements was dictated by space available on the boom of the A-203-C, I decided to disregard the Wilson dimensions and use the figures calculated from the 1970 edition of the ARRL *Antenna Handbook* for a starter with 23' 4-1/2" for the reflector, 22' 3-1/8" for the driven element and 21' 1-3/8" for the director.

Since spacing was to be determined by how far I could reach from the tower to attach the elements, I decided to try only two elements at the outset. With these two elements in place, it was found that resonance was not at 21,150 kHz as desired, but 21,025 kHz! Decisions! Decisions! The first impulse was to shorten the two elements, but better judgment prevailed and it was decided to add the director and see what the influence would be. With the director in place, the resonance had shifted to 21,275 kHz! From past experience, I knew spacing had a pronounced influence on the resonant frequency of an array, but had no idea it would be so drastic! Yet, this was my first experience with a common boom, interlaced array. However, I concluded the dimensions for the Wilson DB-54 were acceptably accurate.

Any doubts about the mechanical strength and performance were quickly put to the test. The elements were installed before noon. While eating lunch, the weather bureau cooperated beautifully and sent a real howling, shingle-ripping storm worthy of any antenna's mettle. It broke limbs from trees all over the neighborhood, but the converted A-203-C shrugged it off in a most matter-of-fact manner.

The second test, that of performance, was provided by the Northern California DX Association's junket to Kingman Reef as KP6KR. After a local frontal system passed and static cleared enough to hear them, it took one hour, fifty-nine minutes to net them. Discounting local cockpit trouble, I considered the time involved completely reasonable. Performance test passed A-OK!

Not having range equipment to check the pattern, I had to settle for front to back and front to side. The performance as a 2 element did not look so good; it only had 10 dB front to back and 30 dB front to side. With it functioning as a 3-element array, it showed 22 dB front to back and 38 dB front to side. This was below desired performance but acceptable. I feel that with range equipment and careful element adjustment, much better performance could be achieved.

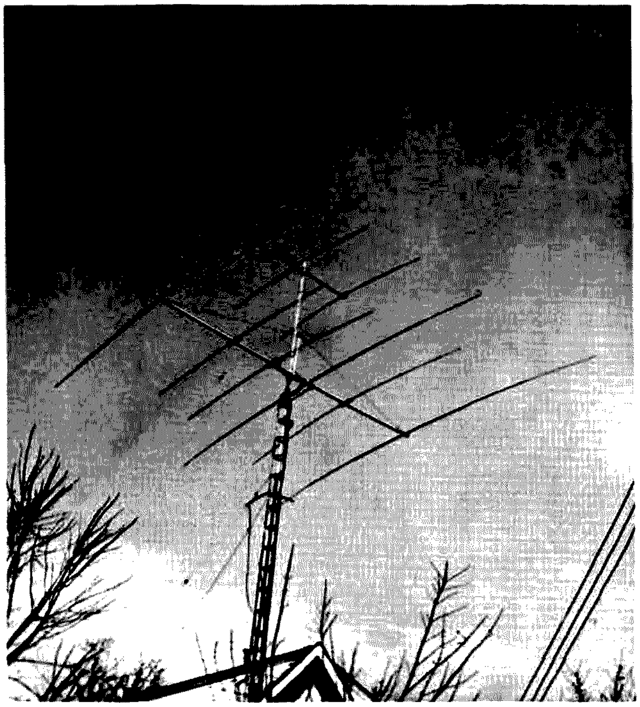

Construction

Element mounting clamps were drilled, sawed, and tapped. They were made from a solid bar of 6061-T1 aluminum 1-1/4" x 1/2" x 12". The 5/8" element mounting holes and the #8 holes were first drilled and the individual blocks sawed apart and sawed lengthwise through. The metal removed by sawing the blocks allowed a firm clamp on the elements. After sawing each block in half, the upper half was tapped 1/4" #20 and the bottom half was drilled out with a 9/32" drill to pass the 1/4" mounting bolts. It is advisable to matchmark the upper and lower half of each of the brackets before sawing them in half in case you haven't drilled them too accurately.

The element supports were sawed from a plate of 6061-T1 aluminum 1/4" x 17" x 10-1/2". The size was dictated by available material on hand. In checking with the aluminum supply house, I found bar stock is available in either 1/4" x 3" or 1/4" x 4". Either would suffice. All holes were laid out and drilled.

Next, cut the 1/2" x 12' tubing in the center. The director and driven element required no extension, but the reflector required extra length. This was accomplished with some 3/8" o.d. tubing salvaged from an old TV antenna. While I was at it, I extended the driven element also, in the interest of mechanical strength at the lap.

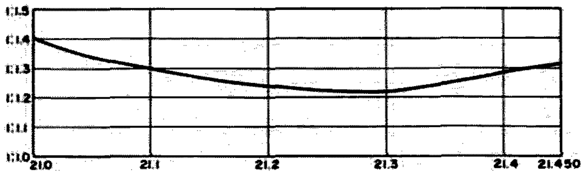

21000	1:1.36	21250	1:1.22
21025	1:1.35	21275	1:1.22
21075	1:1.34	21300	1:1.23
21100	1:1.31	21325	1:1.25
21125	1:1.34	21350	1:1.27
21150	1:1.30	21375	1:1.28
21175	1:1.28	21400	1:1.29
21200	1:1.24	21425	1:1.30
21225	1:1.23	21450	1:1.31

Fig. 2. Swr ratio measurements on 21 MHz beam on boom with Mosley A-203-C.

How to fabricate a capacitor for the gamma match presented a problem. I recalled that the local Radio Shack stores stocked Bakelite™ instrument boxes. I chose their stock #270-627, a 6-1/4" x 3-3/4" x 2" with aluminum cover that would house a 150 pF variable from my junk box. A hole was drilled to allow passage for a screwdriver to the shaft. After adjustment of the capacitor, the hole was plugged. I used a 1/4" aluminum rod for the gamma bar, but aluminum tubing would have worked equally well with appropriate modification to the gamma shorting bar. The capacitor box is bolted to the bottom of the element support. A bracket was fabricated to mount an SO-239 standard coax connector. It is mounted on an angle bracket fabricated from scrap aluminum and has a 5/8" x 6" strap riveted to the angle and is secured to the boom by the "U" bolts that mount the element support to the boom. A short length of the #12 copper wire connects the center connector to a bolt through the side of the gamma capacitor housing box. A generous application of General Cement Corona Dope (Glyptal™) serves as weatherproofing.

Placement of Elements on Boom

The location of elements on the boom was determined by how far I could reach from the tower. Experience had shown it wise to keep the driven elements separated as much as possible to keep interaction to a minimum, with reflector and director placed out as far as I could reach with safety belt extended. I was unable to attain the .1 wavelength for the director and .15 for the reflector, so I had to settle for what I could get for spacing. I feel that improved performance could be attained with greater spacing and range adjustment of element length, but have reservations if improved performance would justify the effort in view of present success with the antenna operation.

Adjustment of Gamma Match

With gamma capacitor and shorting bar set at random, a swr curve is plotted to locate the lowest swr point, disregarding the overall swr picture. The resonance is indicated by lowest swr point. The swr meter is taken up the tower and connected at the antenna. A small signal is fed into the antenna at the resonant frequency and the gamma capacitor and shorting stub are adjusted for minimum swr. After adjustment, the swr was less than 1.5 to 1 across the entire band.

Hardware

It is suggested that stainless hardware be used if it is obtainable. If not, nonferrous hardware should be used. If neither is available, plated steel can be used with shortened life expectancy. If plated steel is used, fog it generously with clear plastic acrylic spray. ■

References

ARRL Antenna Handbook, 1970 and 1974 editions.

"Wilson DB-54 20 and 15 Meter Duo-Band Beam," W1FBY, *QST*, June, 1974, page 40.

Material

3 pcs. 5/8" x 12' x .058 6061-T6 aluminum tubing
3 pcs. 1/2" x 12' x .058 6061-T6 aluminum tubing
1 pc. 1/2" x 1-1/2" x 12" 6061-T1 aluminum bar stock
1 pc. 1/4" x 3" x 5'-6" 6061-T6 aluminum bar stock
1 6-1/4" x 3-3/4" x 2" Radio Shack Bakelite box, stock #270-627
6 ea. 1-1/2 pipe (2" i.d.) "U" bolts
1 lot miscellaneous hardware, a pc. of 1" x 1/4" x 4" aluminum, and capacitor from junk box

A Better Feedthrough For Cables

—the $2 solution

Don Walters WA8FCA
2849 Verle
Ann Arbor MI 48104

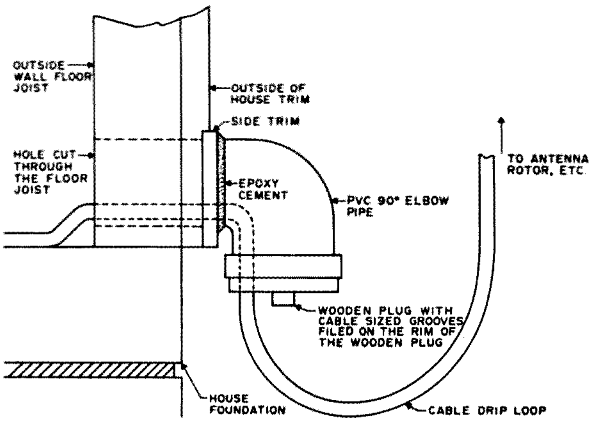

Fig. 1. Flexible method of passing antenna cables into a house.

It was now October, and almost everything had found its niche in our new house. It was now time to set up the ham gear. But how to run the antenna cables into the laundry room, or I mean ham shack, without a lot of work looked as if it would take some time to figure out. Although there have been several methods published for running antenna cables into a shack, none seemed to be flexible enough for my needs. That is, being a careful planner, nothing stays static in my ham shack for very long. So I needed a very flexible way of running antenna cables into the ham shack.

While wandering around a local department store, I found myself in the plumbing supplies department. While looking at some plastic PVC pipe, I suddenly realized that the 1¼-inch diameter 90° elbow I was looking at was the solution to my problem. Using the elbow, I could route several cables into the house and still add a cable or two more, PL-259 connector and all.

Fig. 1 and the accompanying photographs detail how the 90° elbow is mounted on the house. If the

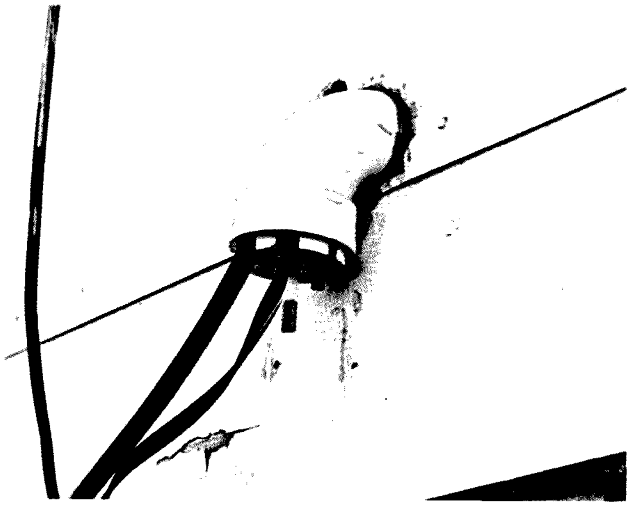

Outside view of the 90° elbow installed with an antenna cable already routed through.

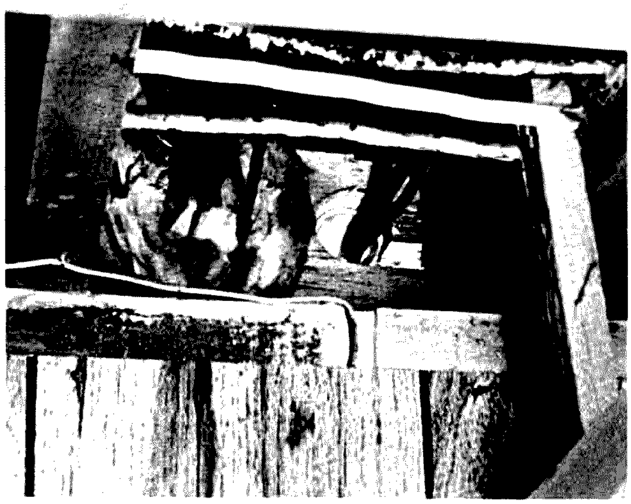

Inside-of-house view of the 90° elbow and the cables routed through it into the house.

house has a basement or lower level (like a bi- or tri-level), the hole for the elbow can be cut, with an appropriate size holesaw, so that the hole is cut through the center of the outside wall floor joist and between any interior floor joists which may be attached to the outside floor joist. The elbow is then coated with quick-setting epoxy around the tapered end and is inserted into the hole on the outside of the house with the elbow opening pointed down. Once the epoxy has cured, the elbow can be lightly sanded and then painted to match the color of the outside of your house.

To keep insects out, either a wooden plug with cutouts for the cables around the plug's edge or a piece of lightly oiled steel wool can be pushed up into the mouth of the elbow. Either way, use something to plug the mouth of the elbow, or you and your spouse will be continuously surprised by the number of creepy crawlies and flying thingies that will find their way into your house (and ham shack) through the unplugged opening of the elbow.

This method of routing antenna cables into the house has worked out quite well for me over the past several months, especially whenever I wanted to route another coax cable into the house. Also, if we should move, the PVC pipe elbow can just be capped with a PVC pipe plug or I could take out the elbow and put a wooden plug into the hole, filling in any cracks with plastic wood. Then sand and paint the repair spot, which should then look like there was never a piece of pipe mounted there. Additionally, this is a simple 2-hour project (depending on how your house was built) that is inexpensive (about $2.00 for the PVC 90° elbow and epoxy) and not all that hard to do. ■

EDITORIAL BY WAYNE GREEN

from page 10

making it possible for me to see what I want to see when I want to see it, and to hell with the network schedulers. They run the Jean Shepherd shows at the darnedest hours, so I tape 'em. Jean, who is K2ORS, and an old, old friend, has a wonderful sense of humor. He keeps threatening to write a series for *73*, but each time he goes off on some other foolish tangent . . . like his current TV series, "Shepherd's Pie," shown on PBS. You've probably seen "Jean Shepherd's America" many times, or his "Phantom of the Open Hearth" film on PBS. Through the VTR, Shep's 2 am programs are available while I eat dinner. Sorry about that, Cronkite.

WHAT'S WITH THE COVER?

There isn't any one simple answer to this. Part of it is that I got fed up trying to think of different covers after seventeen years of frustration and deadlines. Sure, we plan ahead: "Hey, Wayne, the magazine goes to the printer this afternoon. What do you want on the cover?"

Another part has been the success of the *Kilobaud* covers, where we've put the table of contents on the cover. The one thing that makes *73* really different from all of the other ham magazines is the quantity and variety of articles published. I counted up the number of feature articles published in *73* vs. *QST* last year and found 429 in *73* as opposed to 164 in *QST*, and I had to count a lot of public service type articles in *QST* to even get that number. I wanted to get across the idea to newcomers that *73* is more like an ongoing encyclopedia of amateur radio than just a magazine. A year after publication, about 90% or more of the magazine is still as good as new, while *QST*, with its acres of operating news, is as dead as yesterday's newspaper.

I'm open for ideas. Frankly, I don't think much of the *QST* approach to covers, nor do I like the *HR* covers. *QST*, which is put together by a committee, *looks* like it is put together by a committee. *HR* manages to look exactly the same no matter how little they change. *CQ*, for those of you who have seen it, looks amazingly like *Poptronics*, *Radio Electronics*, *Elementary Electronics*, *Popular Science*, *Popular Mechanics*, and the rest of the popular tribe. Blah.

So, until someone comes up with something better in the way of an idea for the cover, we'll make do with a dash of color on top and the index to the articles. I have nothing against color covers; I'm just tired of trying to think them up.

WANT TO WRITE A BOOK?

There is little in amateur radio that can compare with having your name on a book. That beats making the Honor Roll, five band DXCC, and all those things. When you have your own book published, it puts you in a special class, for very few amateurs are so much of an authority on a subject that they can write a book.

But let's say that you are an authority and you have a book in you dying to come out and wow the world. Where should you turn for a publisher? There are dozens of publishers of technical books, and it is bewildering to the new writer. Actually, your choices are quite limited. Sure, there are lots of publishers, and there are lots of poor authors, too. If you have a little better understanding of the role of a publisher, you will be better able to make a choice.

A publisher has two functions for the writer. Firstly, he provides the money it takes to get a book set in type, made ready for printing, and then printed and bound. The money required for this is beyond the average author. To give you an idea of the magnitude of money involved, just the printing and paper bill for one issue of *73* comes to well over $65,000, never mind the cost of setting the type, proofreading, pasting up the pages, getting the diagrams drafted, the photographs made and produced in halftones, etc. The whole process runs considerably over $100,000 per month.

Getting the book printed is something almost any publisher can handle. The second function is the important one . . . distribution. This is where you separate the publishers. In this field, magazines have a tremendous advantage over other publishers since they have extensive distribution for the magazines all set up and running. They also have it a lot easier when it comes to running ads for a book, a whole lot easier. Magazine advertising is not trivial . . . ask any manufacturer. With ads running from $1500 a page to over $3000 in the electronics magazines, advertising can be a deadly expense for book publishers, yet where else can they go to sell their books? Few books make it very far without advertising.

With over a dozen books currently in publication and many more in the works, *73* has a very good distribution system, and the advertising. Thus, if you have a book which might interest amateurs or computer hobbyists, you can do a lot worse than contact the *73* book department. *73* can get your book into print and be sure it is in most of the radio stores and technical book stores, plus offer a substantial mail-order sale through Radio Bookshop.

Get in touch and start those nice royalty checks coming.

FEBRUARY WINNER

J. M. Mendelson W6AOM walked away with February's $100 prize for the best article. If reader support for antenna articles like "Can A Miniature Antenna Work?" is any indication, this, our June antenna issue, should be a winner. Remember, your ballot is the reader service card at the back of the magazine—use it!

CLUB NEWSLETTERS NEEDED

Every now and then a manufacturer comes up with an idea which will benefit ham clubs and is interested in getting a list of clubs which have newsletters as a way to let clubs in on the special deal. When I hear of something which would really benefit ham clubs, I'd like to have a mailing list of all of the clubs with newsletters in order to pass along this information so these clubs can benefit. Send a copy of your club bulletin to Wayne Green, *73 Magazine*, Peterborough NH 03458.

DALLAS IN JUNE

It's been far too long since there has been a first-rate hamfest in Dallas. You can bet that I'm looking forward to getting back to Dallas for the hamfest on June 17-18th.

The hamfest will also be heavy with microcomputer activities and exhibits, so it should be a lot of fun. The whole works will be at the

Continued on page 187

Resurrecting the Beverage Antenna

—try this 55-year-old, low-noise, lowband antenna

Bill Smith W5USM
Route 2, Box 228I
McKinney TX 75069

One can derive considerable satisfaction from the friendly, leisurely-paced contacts often found on the 160 meter band, contacts which sometimes may be set up simply by erecting an inverted L or dipole antenna and using it both to transmit and to receive. More than likely, though, sooner or later the 160 meter operator begins searching for methods of reducing the level of man-made and atmospheric noise predominant on 1.8 MHz. The simplest solution is to place near the operating position a receiving loop antenna, which may be rotated to "null out" noise sources or interference from nearby stations while the outside antenna continues to be used for transmitting.

The loop will solve many receiving problems, and may well be the only such antenna used to satisfy the needs of the user. On the other hand, a good loop may whet the appetite for an even better receiving system. On 160 or 80 meters, the answer is likely to be a Beverage antenna, named after its primary developer, H. H. Beverage W2BML. Beverage wrote a now classic paper on the wave, or Beverage, antenna which appeared in the November, 1922, issue of *QST*. Even after more than five decades, his article remains the gospel of Beverage theory and practice. If low-noise receiving antennas interest you, locating a copy of the article is a must.

This article will dwell not upon the theory, however, but rather on the practical construction of Beverage and Beverage-type antennas for low noise reception on 160 and 80 meters.

Like most topics in amateur radio, there are as many opinions on how to construct an effective Beverage antenna as there are those offering them.

The substance of this article is drawn from more than two years of collecting articles and opinions and using this type of antenna. Although we are going to describe an antenna that requires a fairly large amount of real estate if constructed in true Beverage form, a satisfactory Beverage-type antenna can be built on a small lot and still provide low noise reception and a degree of directivity.

Admittedly, there are other ways to construct a Beverage antenna than those given in this article, but the ones here are likely to be the easiest and most foolproof.

What Is A Beverage?

In the most simplistic terms, a wave or Beverage antenna is a single straight length of wire at least one wavelength long viewed as a feedline, with one side the wire and the other side Earth.

Just as with a feedline, there is an impedance between the wire and the Earth. This impedance stays reasonably constant along the length of the antenna and with frequency. The antenna may therefore be used over a wide frequency range; a Beverage designed for the 1.8 MHz band will perform

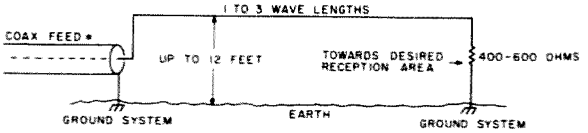

*Fig. 1. Basic Beverage antenna. Value given for termination resistance is approximate for normally conducting soil. Adjust as described in text. Preamplifier may be inserted at feedpoint. This is a terminated unidirectional Beverage with maximum response to signals arriving from the terminated end of the antenna. Signal voltage increases as radio wave sweeps the length of the antenna from right to left. Signals arriving from the left and traveling to the right are dissipated in the terminating resistor. See text for description of ground system. *See text for details of feedpoint matching.*

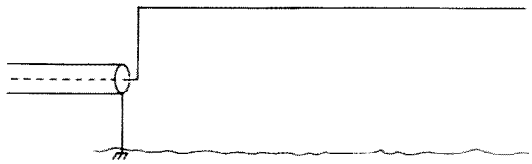

Fig. 2. This Beverage is similar to Fig. 1, but is not terminated. Signal response is nearly equal off either end, but slightly favors the non-fed end. Short, Beverage-type antennas are similarly constructed; see text.

well at 3.5 MHz.

For the Beverage antenna to be directional, and obtain maximum gain off the end of the antenna opposite the feedpoint, the Beverage must be terminated to ground through an impedance equal to that between the wire and Earth. In other words, the non-fed end is grounded through a carbon resistor. If you wish to receive off both ends of the antenna, omit the termination and let the far end float. There are ways to use a single Beverage for reception in either direction through a more-or-less complicated phasing system. This is beyond the scope of this article. For this information, the reader is directed to the June, 1977, *QST* article by Barry Boothe W9UCW, entitled, "Weak-Signal Reception On 160—Some Antenna Notes." The article is excellent and well worth reading.

A Beverage antenna receives the most response from signals arriving off the end(s) of the wire, not from broadside. The intensity of the signal builds as it travels along the length of the wire, reaching the maximum for a given length at the end(s). A Beverage erected in an east/west direction receives maximum signal energy from these directions.

In our east/west example, maximum signal energy arriving from the east is dissipated in a load, in this case the receiver, while signals arriving from the west are mostly dissipated on the east end through another load, a terminating resistor. The closer the termination resistor is in value to the impedance of the antenna, the more complete the dissipation of the west-arriving signal and the better the front-to-back rejection. See Fig. 1.

This is true in a terminated Beverage. A similar antenna left with the non-fed end floating (not terminated) will reflect signals back down the wire from the floating end to be dissipated in the receiver. In this case, much of the directivity of the antenna, if that is what is desired in addition to low noise, is destroyed, although signal intensity arriving broadside will still be reduced. See Fig. 2.

Some directivity of Beverage-type antennas will be noted with lengths as short as one half of a wave, but directivity becomes much more pronounced in true Beverages one wave or more long.

Logically, one might expect that the longer the Beverage, the better. This is not true. For reasons that will not be discussed here (see the original article by Beverage), it is possible to make the antenna too long. A Beverage of one to three wavelengths long is ideal; in the case of 160 meters, this is 550 to 1600 feet. A length of 800 to 1000 feet will give good performance on both 160 and 80 meters.

Short Beverage-Type Antennas

Thus far we have dealt with Beverages of some physical length. Available real estate and other considerations may preempt such construction.

A true Beverage is physically long, as explained, but don't rule out some Beverage advantages in short Beverage-type antennas. Although you will not achieve the gain and directivity of a true Beverage, you can still have the Beverage characteristic of low man-made and atmospheric noise pickup by constructing an antenna as short as 100 feet using the methods given in this article. See Figs. 1 and 2.

I have obtained good results from Beverage-type antennas as short as 100 feet laid upon the ground. Laying the wire upon the ground has the effect of decreasing its velocity factor—and therefore reducing the physical length for a given electrical wavelength.

As an example, in winter I have used a Beverage-type antenna 250 feet long laid upon the ground in an east/west direction. The antenna is terminated to ground on the eastern end through a 50-Ohm resistor. The antenna exhibits low noise and some directional pattern. From north central Texas, the pattern covers about 90 degrees, 45 degrees on either side of its axis. W4s and Caribbean stations within the pattern are typically 10 to 12 dB stronger than 8s, 9s, or Øs located more-or-less broadside to the antenna, referenced to a receiving loop. Stations to the west and northwest are very poor copy on the Beverage-type antenna.

The antenna does not have the directivity or gain of a similar antenna 1200 feet in length, but the shortwire is better than a loop and much, much better on noise rejection than my quarter-wave transmitting antennas.

There is no reason why similar antennas cannot be tried on city lots, laid upon the ground or suspended 6 feet or so in the air.

I should add that I am of the opinion that anyone who takes seriously his ability to hear well on 160 or 80 meters cannot possibly have too many receiving antennas ready to select at the flip of a switch. At the moment, I have available no fewer than 7 separate receiving antennas, including 3 loops and 4 Beverage or Beverage-type antennas, and none of them shows behavior identical to another's!

Height Above Ground

One of the interesting characteristics of the Beverage antenna is that it does not have to be lo-

cated very far above ground and, in fact, may be laid upon the ground.

There are rather complex formulas relating several factors used to compute height above ground. In practice, however, a height high enough to permit passage of persons, animals, and vehicles below the antenna is a good choice. A height of 6 to 12 feet over "normally" conducting soil is an excellent choice. The impedance of the antenna changes very little between 6 and 12 feet. Greater heights will introduce unwanted noise pickup. See Table 1 for the antenna impedances for various heights above ground and wire sizes.

Regarding the wire itself, most any size may be used as long as it will support its own weight. The wire may be uninsulated if erected above ground, or insulated if laid upon the ground.

The wire may be supported in any number of ways, but if metallic supports are used, the wire should be insulated from them. Examples of supports are metal or wood fence posts, 1" x 1" wood stakes, convenient trees, and the like. The wire should be run at a nearly constant height above ground and in a straight line not varying more than 10 degrees. If the antenna crosses a gully, it should be run down into the gully at a nearly constant height above ground.

We have mentioned previously the possibility of actually laying the Beverage upon the ground. This has been tried by me and many others with excellent success, but it should be done in untraveled areas, for obvious reasons.

I live in an area of the country which is said to have excellent soil conductivity. There are those Beverage experimenters who say that in such areas it may well be an advantage to lay the Beverage wire upon the ground. I can neither prove nor disprove this. I have used Beverages both on the ground and up to six feet above ground without noticing any performance changes.

If the Beverage is laid upon the ground, obviously you will use insulated wire. If you choose to terminate the antenna, I would suggest doing so directly to ground or through a 50-Ohm resistor.

Providing Termination Ground

Undoubtedly the most difficult and uncertain construction aspect of an unidirectional terminated Beverage antenna is the ground itself.

While some Beverage users will argue that the ground is problematical at best, it can be clearly demonstrated that the proper selection of the terminating resistor in conjunction with the ground does have a definite effect upon the directional characteristics and the rejection of unwanted signals from the rear of the Beverage.

Even though the Beverage antenna may perform best when erected over poorly conducting soil, this same soil also accounts for more difficulty in grounding the terminated end. But unless you can ground your Beverage through a single stake in salt water or a marsh, it remains worthwhile regardless of soil conductivity to establish the best possible ground connection.

A single ground stake may be sufficient under the above mentioned conditions, but seldom will such conditions exist. So how is a low resistance ground established?

The answer is to put in contact with the soil the most practical amount of metal possible. Probably the minimum ground acceptable is a system of three copper ground rods as long as possible driven into the soil, spaced a minimum of two feet apart and bonded together. The bonding may be done with automobile battery grounding straps or with the shield removed from a discarded length of RG-8 or similar cable. Do not rely upon the clamps provided with the ground rods. Solder or braze all connections, first making sure the rods and strap material are free of grease, paint, or whatever. The same applies before driving the ground rods into the soil. A torch will be necessary to provide enough heat for proper bonding.

An indication of grounding quality can be determined from whether the termination resistor value changes as more ground is provided. If it does, you need more grounding or metal in contact with the soil. At some point you obviously reach a practical limit, but you should try to achieve the least possible change in the termination impedance. Proper determination of the correct resistor value is made by observing the strength of a signal arriving from the rear (fed end) of the antenna and selecting a resistor value which provides the deepest null or rejection of that signal. An AM broadcast station is a good signal source for this adjustment. Here is an application where a carbon potentiometer is useful for the termination resistor (as opposed to fixed-value carbon resistors).

What we are attempting to establish is the lowest possible resistance to Earth. Three ground rods provide 1/3 the resistance to ground as a single rod, and therefore a three times better ground connection.

In extremely poor soil conductivity areas, an elaborate ground system will be useful. Such a system was described by Roger Hoestenbach W5EGS in his December, 1976, *QST* article entitled, "Improving Earth-Ground Characteristics." This article is recommended reading.

A technique similar to that described by Hoestenbach would be to bury an old auto radiator obtained at low cost from a junkyard. A grounding strap should be bonded to the radiator, and the radiator filled with a heavily-concentrated brine solution. The brine solution is made by dissolving as much rock salt as possible in the quantity of water required to fill the radiator. The rock salt used in water

Height of Wire	4'	8'	12'
Wire Size #	Ohms Impedance		
10	460	493	520
12	474	507	534
14	488	521	548
16	502	535	562
18	516	549	576
20	530	563	590
22	544	577	604
24	558	591	618

Table 1. Impedance of Beverage antenna as a function of wire size and height of wire above ground. These values will vary some minor amount due to local soil conditions. You can also expect variations from day to day and season to season. The proper terminating resistance can be determined as given in the text, or an adequately close value for most locations can be selected from this chart.

softeners is an inexpensive source.

A similar brine solution may be poured on the soil around the ground rod system, but remember that the brine solution will kill all plant life for some area as it leaches into the soil. The condition will exist for several years. Repeat the brine solution application as needed, probably once every 30 to 90 days.

Wire mesh or screen also may be buried a few inches in the ground, equipped with a suitable bonding strap.

Another method of providing a low-resistance ground is through the use of a radial system extending away from the Beverage. Do not run the radial wires back towards the Beverage. The radials should be made of uninsulated wire, with the ends staked to ground through metal stakes as long as you wish. A larger number of short radials is better than a lesser number of long radials. Sixteen radials about 55 feet long, fanned about 11 degrees apart and distributed over the 180 degrees off the end of the Beverage, would be ideal. If this is impractical, use as many radials as possible (even though they may be but a few feet long each) fanned over the 180 degrees. Treating the soil with the brine solution may also be useful.

Providing a low-resistance ground may be carried to whatever extreme the builder wishes, but the point is to provide the best possible ground circumstances permit.

Similar grounding techniques must be used at the fed end of the Beverage where the shield of the coaxial cable is bonded to the ground system. This will prevent random signal pickup on the coaxial feedline, pickup which will destroy the entire Beverage antenna system by upsetting the directional characteristics.

This ground system business may seem like a lot of trouble and work, but the effort expended may be the difference between a mediocre receiving antenna system and one that will provide many enjoyable hours and the ability to hear the weak ones your competition does not. And whether you choose a terminated unidirectional Beverage or a bidirectional one (with no termination), be sure to provide a ground system for the coaxial cable at the fed end, even though it may be as unelaborate as one or more ground rods.

Feeding the Beverage

Ideally, the Beverage, like any antenna, should have its feedpoint matched to the feed or transmission line. Physically, it is unlikely that you will be able to bring the fed end of the Beverage directly to your receiver, especially without varying the axis of the wire less than 10 degrees. Even if you can, some type of a matching device should be used to lower the 400- to 600-Ohm antenna impedance to that of a typical communications receiver.

In most all cases, the Beverage is, or should be, isolated from the home or other antennas. This dictates the use of a feed or transmission line.

My suggestion is the use of RG-58 or RG-59 uncontaminating coaxial cable, double-shielded if available. Double-shielded RG-59 is available from cable television supply houses or CATV companies, and is commonly known as drop cable. The better the shielding, the better will be the rejection of unwanted signals picked up on the feedline. Beware of the RG-58 being sold in many CB stores and some ham outlets. I have seen some that would be doing well if it had 45 percent shielding.

Elsewhere in this article is a brief discussion on whether a preamplifier is necessary. If you choose to use one, then the input circuit will need to be designed for the high impedance feedpoint of the Beverage and the output made to match the coaxial cable impedance.

For the purposes of this section, let us assume that you are not going to use a preamplifier and therefore need to match the antenna directly to the feedline.

This may be accomplished in many ways: the common L-type network, a toroid autotransformer with a tapped selection of high impedance points, a common autotransformer made of coil stock,* or a 4:1 balun of the type used on the antenna input of a television set.

I am a believer in cutting the coaxial feedline to some multiple of an electrical half wavelength determined by the velocity factor of the coax, .66 for solid dielectric or .81 for foam. Free space half wave at 1.8 MHz is approximately 273 feet. A .66 velocity factor is 180 feet, or 221 feet with .81 velocity. Therefore, the feedline would be 180, 360, etc., or 221, 442, etc., feet long respectively.

Be certain to ground the coaxial cable shield at the feedpoint. Either bury the coax a few inches in the ground or lay it upon the ground—do not suspend in the air. These measures are taken to prevent stray pickup on the feedline.

Preamplifiers

It may be desirable to employ a preamplifier with the Beverage antenna, particularly in instances where long runs of coaxial cable feedline are necessary. Admittedly, signal losses per

*Though this is rather bulky, try about 3 inches of B&W coil stock #3062 with the low impedance tap up 3 or 4 turns from the ground and the high impedance tap 15 to 30 turns up—you'll have to experiment.

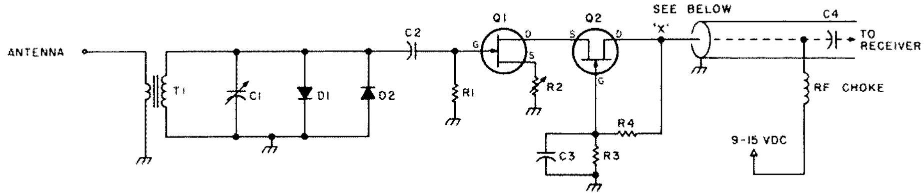

Fig. 3. 160 meter preamplifier suitable for Beverage use. T1: Amidon toroid, FT-82-61 or FT-114-61, primary (to antenna) of 2 turns #18 enamel, secondary of 25 turns #18 enamel. C1: miniature 365 pF air variable. D1-2: 1N914 or similar diodes. C2: 100-500 SM. R1: 220k. R2: 0-200 Ohms; adjust for preamplifier gain. R3: 6.8k. R4: 27k. C3: .01. Q1-2: MPF-102. Preamplifier may be powered at point "X" with a self-contained battery, 9-15 V dc, or by duplexing through the coaxial cable feedline, in which case the power may be inserted at the station end of the coaxial cable through an rf choke. C4 is a .001 blocking capacitor. If preamplifier is used at the feedpoint of the antenna, make certain of waterproofing. Preamplifier must be grounded to Earth, and may be built in a small minibox with short, point-to-point wiring. The entire assembly could be placed in a small plastic refrigerator box for weather protection.

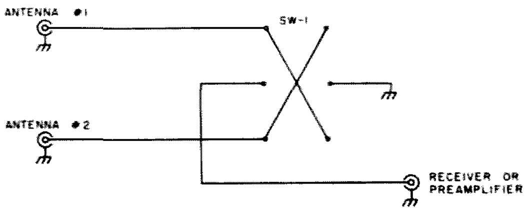

Fig. 4. Manual switch for grounding one of two antennas not in use to prevent reradiation; see text. SW-1 is a non-shorting double-throw double-pole toggle built inside a small minibox. Use leads as short as possible. Make certain all grounds are good. If used at the feedpoint, bond minibox to ground system. If used at the receiver, bond it to receiver chassis. Do not rely upon coaxial cable shield for ground.

hundred feet of coax are low at these frequencies. Whether a preamplifier is necessary is left to the user.

If one is deemed necessary, a simple circuit is described by Doug DeMaw W1FB, in his April, 1977, *QST* article, "Build This 'Quickie' Preamp." In this preamplifier, as in all others, I would suggest the use of back-to-back diodes such as 1N914s at the input to prevent rf and similar damage to the preamplifier.

Back-to-back diodes are included in the schematic of another suitable preamplifier within this article. Credit for this circuit apparently belongs to K1PBW. See Fig. 3.

If the preamplifier is used at the antenna, the most logical place, the device may be supplied power duplexed through the coaxial feedline, through a buried control cable that may also carry voltages for antenna selection relays, or from a battery contained within the preamplifier case.

Reradiation and Inter-Antenna Coupling

One undesirable characteristic of the Beverage antenna is its ability to reradiate large amounts of signal energy to nearby antennas, and to couple into them and cause variations of antenna pattern and other unwanted characteristics.

It is recommended that a Beverage antenna be physically removed from any other antenna by a minimum of half of a wavelength; more is desirable. This may not be possible due to space limitations, but whatever the situation, it is recommended that when two or more receiving antennas are used, some method of grounding the unused antenna be provided. A schematic of a suitable manual switch included in this article can be used, or a method of automatic grounding with electrically-controlled coaxial switches or relays can be devised. See Fig. 4.

Government-sponsored tests on Beverage antennas reveal that they may be crossed within a few feet of each other, provided they do so at angles of 60 degrees or more. Beverage antennas run parallel to one another, utility lines, wire fences, or the like should be separated by at least one wavelength.

Lightning and Static Discharge Protection

Beverage antennas are susceptible to collecting damaging voltages in the presence of certain weather conditions such as electrical, snow, and dust storms. Attention to the protection of receivers and preamplifiers is necessary. The ultimate protection is to disconnect the coaxial cable feedline at the antenna, or, if a preamplifier is used, to disconnect the antenna prior to the preamplifier's input stage. Various configurations are obvious, and are recommended to be at the antenna so as to not route the voltages into the home.

If two or more Beverage antennas with separate feedlines are being used and you insist on bringing the feedlines into the house, a Barker and Williamson model 376 coaxial switch, properly installed, is suggested. The switch could be installed at the entrance to the building.

If you are using a terminated Beverage, it is wise to inspect the termination resistor following any severe weather, as often the resistor will be damaged.

Play it safe: Disconnect the Beverage when a storm approaches and any time you will be away from home.

Conclusion

The Beverage is not a cure-all or all-purpose antenna. It is a directional antenna and should therefore be carefully aimed in the desired direction of reception. With a length of one to three wavelengths, the horizontal pattern will be approximately 45 to 30 degrees, centered on its axis. It is also primarily a DX antenna, not intended for general all-around use.

For serious DXing on 160 or 80 meters, several Beverages will be required if all compass points are to be covered. However, several Beverages and a good receiving loop will enable you to explore to the fullest the two lowest high-frequency bands. ■

LETTERS

from page 45

200-Watt medium power ops come through a couple of times a week. The 20-Watt stations are readable maybe once or twice a month, and then they are usually smothered by European QRM.

Of course, I also use a gas guzzler now. I used a very economical Datsun until I got fed up with the 55 mph speed limit. Now, as long as I can't enjoy driving any more, I go in a big van and work while someone else (Sherry) drives me. I just don't enjoy driving along at 55 mph in a 120 mph car, so we burn up the old gas along with the other American cars.—Wayne.

SELLING MORE MAGAZINES

Although I have been licensed for only a relatively short period, I feel that the time has come to vent some steam and offer some suggestions and comments aimed at improving our way of life.

I follow with interest and sometimes frustration what seems to be a never-ending battle between Wayne Green and the ARRL. Yes, probably most of the buyers of *73* are ARRL members. Any worthy organization such as the ARRL will solicit and accept suggestions aimed to improve its performance, but it seems to me that Wayne's constant downgrading of the League is aimed toward selling more magazines instead of helping amateur radio. Let us all offer our full support to the League by offering suggestions and improvements. If the elected officers fail to do their job, let's

Continued on page 59

H. W. "Barry" Merrill W5GN
10717 Cromwell Drive
Dallas TX 75229

How To Hang A Longwire

—*without a catastrophe*

When space permits, a long longwire can be a great improvement as an antenna, especially on the lower frequencies. However, what size wire is needed to prevent breakage?

The tension in a suspended wire depends on the span length, the sag in the wire, and the weight of the wire. A suspended wire will assume the shape called a "catenary," and the equations which describe the resulting tension are rather complex, involving hyperbolic sines and cosines. These equations have been solved and the results tabulated, permitting simple calculations for tension in the wire.

Fig. 1 gives the physical layout of a suspended wire antenna, showing the span length "S" and the droop "d". For a fixed span length, as the droop decreases (i.e., as the wire becomes more horizontal), the tension increases. We can thus calculate the tension in a particular span and compare this with the breaking strength of the intended wire.

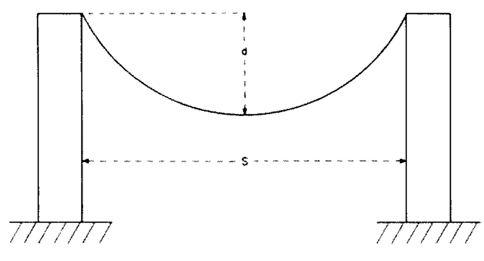

Fig. 1.

Table 1 provides the characteristics of soft-drawn copper wire, which is the type of wire commonly available, as well as the characteristics of hard-drawn copper and #12 copperweld, for comparison.[1]

As stated above, the tension depends in large part on the sag of the wire. The sag of the wire is defined as the droop "d" divided by the span length "S", or sag = d/S. Based on the sag of the wire, Table 2 (which is the tabulated solution to the catenary equations, and can be plotted as a smooth graph) provides the stress factor "F" and the length factor "L". The stress factor represents the increase in tension as the wire is drawn more horizontal, and the length factor represents the actual wire length in the span (which is always greater than the span length). The tension in any span can then be calculated from the equation T = F x L x W x S, where T = resulting tension, in pounds; F = stress factor (based on sag, from Table 2); L = length factor (based on sag, from Table 2); W = weight of the wire, in pounds per foot (from Table 1); and S = span length, in feet. For example, a 1000-foot span of #12 soft copper wire, with a

[1]All data for this article was drawn from the *Standard Handbook for Electrical Engineering*, McGraw-Hill, 1957.

droop of 50 feet, has a tension of T = 2.5 x 1.006 x .0198 x 1000 = 49.7 pounds, since this span has a sag of .05. Comparing this tension with the breaking strength of #12 wire (Table 1) of 197 pounds indicates this antenna would be safe. However, if the droop was decreased to only 10 feet, the sag would then be .01, and the tension would increase to T = 12.5 x 1.000 x .0198 x 1000 = 247.5 pounds, which exceeds the breaking strength of the wire!

Thus, by this relatively simple calculation, the tension in a given antenna can be computed and compared. But is there a more general answer to the question of what size wire to use? Notice that the breaking strengths for soft copper wire increase in exact proportion to the weight per pound. In fact, the breaking strength is always 10 times the weight of 1000 feet of wire. Hence, in a 1000-foot span, if the tension is to remain less than the breaking strength, the stress factor must remain less than 10, and thus the sag must be greater than .012 (from Table 2, when plotted as a graph). This fact is independent of the wire size! However, this antenna would have tension equal to breaking strength, and would not allow for wind loading, icing, etc. If we choose a safety factor of 2 (i.e., tension will not exceed half the breaking strength), we then find that for any span length, any size wire will support itself, provided the sag (hence droop) is greater than some distance. These calculations are summarized in Table 3. It should be realized that Table 3 is valid only for soft copper (bare) wire. If insulated wire were used, the breaking strength would not be increased appreciably, but the weight per pound would have increased, and hence the permissible stress factor would be reduced, requiring more sag (hence more droop) to prevent breakage. For a general span, the maximum permissible stress factor can be computed from the equation:

$$F = \frac{\frac{\text{Breaking Strength of Wire}}{2}}{\text{(Weight per foot)} \times \text{(Span length)}}$$

Table 2 can then be used to determine what sag is required to ensure this stress factor is not exceeded. There is additional safety in this equation, since span length is used, which is always less than the true length of wire suspended.

Now, what if you happen to have supports 2500 feet apart, but only 150 feet high? Table 3 indicates a droop of 162 feet is required. The only solution is to acquire stronger wire, which will require less sag. For example, #12 copperweld in this span would require a sag of only 37.5 feet, as the half-breaking strength of this wire is 392 pounds.

So, if you just happen to have two supports 1400 feet apart, string your wire, using any size wire, but let the droop exceed 35 feet and you can rest assured the wire won't break! ■

Wire Size (AWG)	Weight per Foot (pounds)	Breaking Strength (pounds)	
		Hard drawn	Soft drawn
8	.0500	826	480
10	.0314	529	314
12	.0198	337	197
14	.0124	214	124
16	.0078	135	78
18	.0049	85	49
20	.0031	54	31
22	.0019	34	19
24	.0012	21	12
26	.0008	13	8
12 (copperweld)	.0200	785	—

Table 1. Physical characteristics of solid bare copper wire.

Sag	Stress Factor "F"	Length Factor "L"
.002	62.5	1.000
.005	25.0	1.000
.01	12.5	1.000
.015	8.3	1.001
.02	6.3	1.001
.03	4.2	1.002
.04	3.2	1.004
.05	2.5	1.006
.06	2.2	1.009
.07	1.9	1.013
.08	1.6	1.017
.09	1.5	1.021
.10	1.3	1.026
.15	.99	1.060
.25	.8	1.151

Table 2. Stress and length factors for various sags.

Span Length (feet)	Minimum Droop (feet)
250	1.5
500	6
1000	17
1500	37
2000	62
2500	162

Table 3. Minimum permissible droop versus span length.

LETTERS

from page 56

oust them next election.

Hans J. Miller
WB3DYH/WD4BFD
Camp Lejeune NC

You've made some good points, Hans. On one point you are in error. Criticism of the League does not increase subscriptions . . . to the contrary, it very markedly slows them down. You see, a great many amateurs feel as you do, that it is not nice to pick on the ARRL. To me, this is the same reaction we saw with many Republicans when the press started picking on Nixon for Watergate.

Perhaps I've been around much, much too long. My beliefs in the League were as bright as anyone's many years ago. I believed that the members were the backbone of the organization and that the directors brought the wishes of the members to headquarters, eventually bringing about changes. It's a lovely thought.

Sure, I know that most hams don't want to know about the political side of things . . . after all, it's only a hobby. It is so frustrating to hear about the things that are going on behind the scenes, things over which none of us has any control, that we would rather not know about them. It's easier to smile confidently and put Green down as being dumb or just trying to make money.

The ARRL is a long, long story . . . I've covered much of it down through the years, and I suppose I should take the time to write an article explaining what the ARRL really is and how it works. Few outside of HQ understand the League and how it got the way it is. Having

Continued on page 61

Christoph Janker WD4CPK/DF3TJ
Marienburgerstr. 32
7980 Ravensburg
West Germany

The "German" Quad

—*six bands with one antenna*

Technical development leads to new and better amateur radio devices all the time, but it seems that in the field of allband antennas a stagnation has been reached. The hams who work all five SW bands mostly have two antennas for this purpose: a longwire for 80 and 40 meters and some kind of a three-band beam (which means "ugly things" on a tower in the garden). From the ham's viewpoint this is ideal, but most do not want to give their neighbors a reason to move at least three blocks away.

In his weekend shack near Bremen (a harbor city in northern Germany), DL3ISA developed a new amateur radio allband antenna. He tested a lot of different configurations and forms until he found a solution which is simple and operates well on 80, 40, 20, 15, and 10 meters—and is even useful for 2 meters.

He took 83 meters of antenna wire and mounted it in the form of a big quad about ten meters (30 feet) above the ground in a horizontal position, so that the ground serves as a reflector for 3.5 and 7 MHz. Each leg of this big quad has a length of 20.7 meters. The feedline is a 60- or 75-Ohm coax cable which is connected to the beginning and the end of the antenna wire in one of the four corners of the quad.

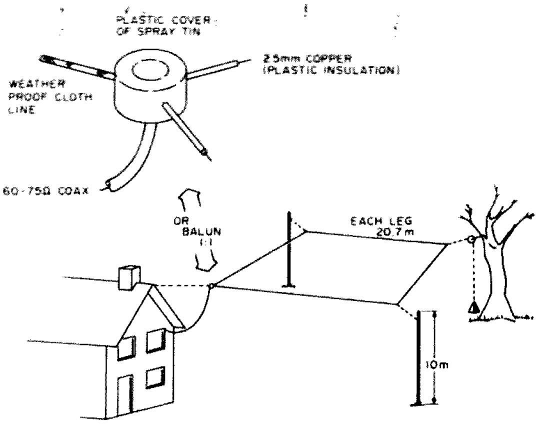

Fig. 1.

A balun (1:1) may be used at the connecting point in case of TVI/BCI, but a long or a deeply ribbed glazed porcelain insulator does an even better job, because it allows for no power loss. The whole connection point should be sprayed with acrylic or otherwise protected against corrosion. DL3ISA put the whole connection into a plastic cup to protect the end of the coax cable against wet weather. (See Fig. 1.)

The length of the transmission line is random, and impedance checks resulted in an impedance of 60 to 90 Ohms at the feedpoint, so that a 75-Ohm coax would be more favorable than 60-Ohm cable.

As a good material with sufficient strength, a 2.5 mm-diameter soft-drawn copper wire with an enamel coating was chosen for this antenna. The guy lines are weatherproof, rayon-filled, plastic clotheslines.

For a European amateur radio station, this antenna should be mounted in an east-west/north-south direction, because the four preferred directions are the extensions of the quad's diagonals. This way, QSOs can be made to the northeast (South Pacific, Japan, etc.), to the northwest (North America), to the southwest (West Africa, South America), and to the southeast (East Africa, Arabia). Of course, this antenna can be fixed in any other direction to work any desired country. On the 15 and 10 meter bands especially, several side lobes between the four main lobes were measured with a beamwidth of 10 to 20 degrees in the horizontal plane.

As a horizontal full-wave loop, this antenna receives only a negligible amount of electrical interference from the surrounding area.

The standing wave ratio was determined by DL3ISA and is shown in Fig. 2. There may be small deviations from the swr due to the local ground conditions. The influence of other antennas is negli-

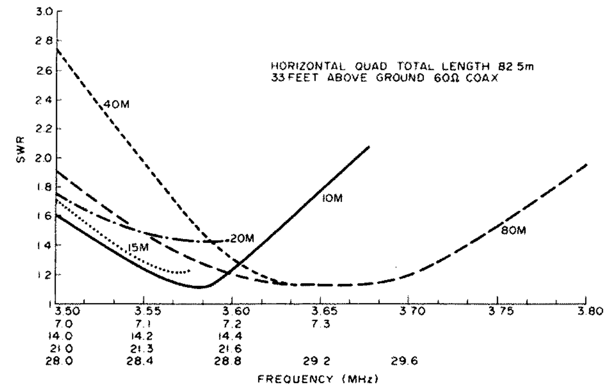

Fig. 2.

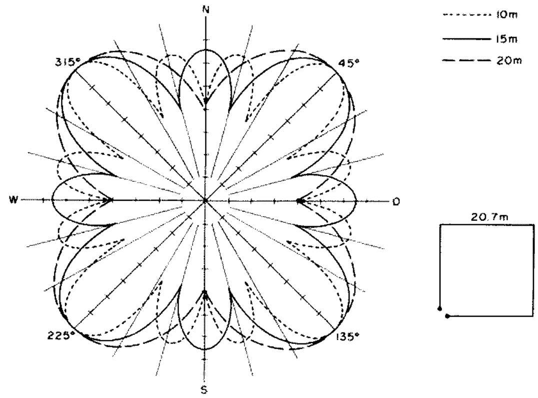

Fig. 3. Antenna height: 10m.

gible if these antennas are in the center of the quad. Parallel mounted antennas outside the quad gave a negative influence on the antenna data in the higher bands. Other antennas should be kept at a distance of at least seven meters from the quad.

The radiation pattern on, 80 meters generally is at a high angle, and a radius of 600 miles has been found to be the area covered under normal conditions. The gain relative to a dipole mounted at the same height is around 6 dB; the quad has no directivity on 80m. On 40 meters, the radiation pattern is actually at a lower angle than that on 80 meters, and has no directivity.

On the 20, 15, and 10 meter bands, the radiation pattern is at an extremely low angle (similar to a rhombic antenna). On these bands, four preferential directions have been figured out in poor-to-medium conditions, but with an open band no remarkable directivity has been observed. The horizontal angle of the main lobes is about 30 degrees; the gain was 6 to 10 dB better than a two-element three-band beam at the same height and 12 to 18 dB better than a ground plane antenna. (See Fig. 3.)

Most of the above is just theory. In my practice, the antenna has worked as described only on 10, 15, and 20 meters. On 80 and 40 meters, the radiation has to be almost as low as on the higher bands. My log shows that within a couple of days in December, 1977, I worked the following stations, all on 80 meters SSB: 4Z4, TA1, W3, YK, VO1, JA1, 9M2, CT3, EA9, and C31. The transmitter used had an rf output of about 40-50 Watts PEP, and no clipping or processing was used. The antenna worked just as well for short distances. A gain of at least 2-3 S-units could be observed as compared to a dipole. The antenna could not be tested in QSOs on 40 meters, but comparable results are probable.

DL3ISA found that the antenna works satisfactorily at a height of at least 5 meters above ground. However, the bandwidth on 80 meters becomes insufficient under these conditions.

Near Frankfurt-am-Main, this antenna had been mounted according to the instructions of DL3ISA around a little house at a height of 9 meters. Experimental measurements at this place showed the same results as we had before, even though there was a whole house with all its electrical wiring inside the antenna.

Due to the extremely low angle of radiation, it was possible to work 15 and 20 meter DX to the US east coast and Brazil at a time when Europe was expected to be down from the west for 30 minutes.

A 2 meters test was made with a swr of 1:1.2 to 1:2.0, so that the antenna could be declared as a "six bander" without even a balun. However, the test was only run from 144-146 MHz. The North American band portion running to 148 MHz was not tested.

Taking into account the fact that this allband antenna is good for DX work in the higher bands, works most favorably on 80 and 40 meters, and is no spectacular monster to your neighbor's eyes, it is a real gain for almost any ham. It's also not a bad idea for Field Day.■

LETTERS

from page 59

been a member for 40 years and having personally known everyone involved with it for well over 20 of those years, my perspective is good . . . and despite what you may want to believe, not very biased.—Wayne.

CATCH 19

I read your editorial concerning CB infiltration into the ham bands with great interest. You suggested at one point that we track them down with DF equipment, an excellent idea with only one problem . . . what do we do if we catch one?

I had an interesting experience recently along these lines, and it may illustrate the problem we might encounter if we caught one of these interlopers.

I am the editor of New Hampshire's largest circulation newspaper. We are located in Manchester, and reach a wide circulation base. One of our readers called us recently to see if there was anything we might do to help clean up channel 19 in Manchester. It seems that there is one operator who is running more than legal power and splattering over two channels. This operator comes on every night and uses the most obscene, filthy language I have ever heard. He dominates the frequency for hours, and I assure you the language Is disgusting.

I thought it might make a good story and, perhaps if something was done, it would serve as a warning to similar operators to avoid such practices. I called the FCC in Boston to see whether they

Continued on page 63

Joel Eschmann K9MLD
132 Ohio St.
Racine WI 53405

Mobile In Disguise

—the invisible 3/8λ 2m antenna

About a year and a half ago, while I was attending a repeater club meeting, someone removed all my radio equipment from my car, doing damage and inconveniencing me. This got me upset! Fortunately, most of my gear was recovered because it had identification on it. Since that time, though, I have been nervous about gear in my car and the antennas that give it away. I removed the 5/8 antenna and went to a 1/4 wave, but it still wasn't the answer. Now it looks like I've got a scanner in my car, not a 2 meter rig.

While parking my car at work one morning, a Ford LTD pulled up next to me and I spotted a cowl-mounted antenna used for AM/FM car radios. I got out of my car and went to look at it. It was stainless steel, held on the fender, and easy to mount. The one-piece element was 31" long. 31" long is a 3/8-wave 2 meter antenna! It looked like a perfect disguise antenna for my GM car.

Now, how would I tune it? Looking at antenna pat-

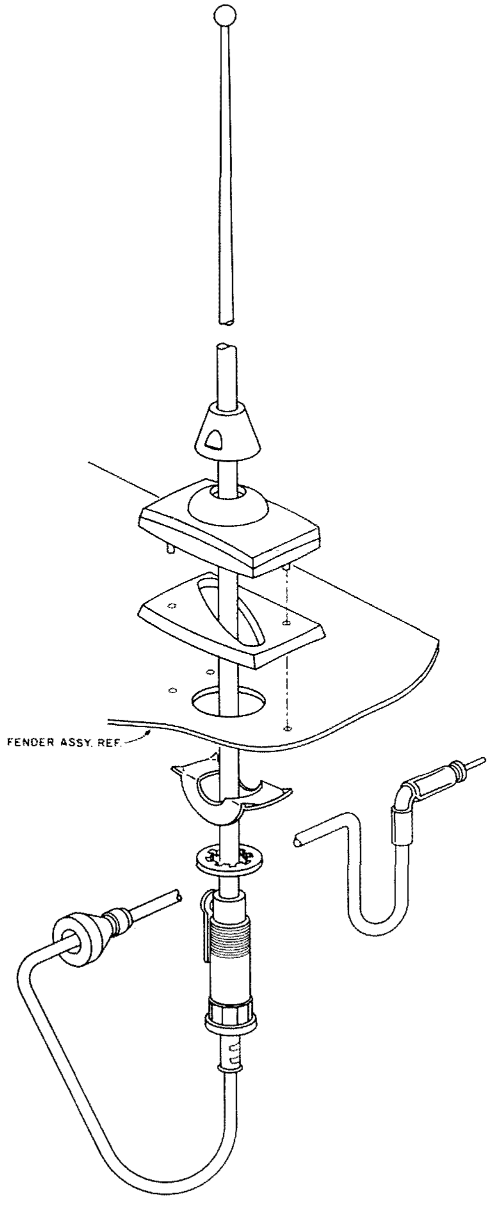

Fig. 1. Cowl antenna.

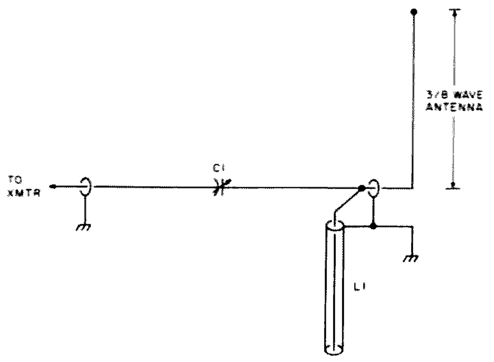

Fig. 2.

terns, it appeared that the 3/8 antenna looked like a pattern between a 1/4-wave and a 1/2-wave antenna. The untuned terminal impedance was about 200 Ohms reactive. I had to get the impedance down to 50 Ohms. After looking at a Smith chart (see the *ARRL Antenna Handbook*) to get an idea for an approach to tuning, I decided to use a modified L/C circuit.

The coax cable used on the antenna as it came from the factory is totally useless for a transmitting antenna feedline. The coax was trimmed short, leaving enough to attach a BNC connector (Fig. 3). A small aluminum box with two mating BNC connectors was used to house the matching circuitry. As illustrated in Fig. 2, use a 25 pF variable capacitor and a length of RG-174 or RG-58 5″-long coax. With the capacitor meshed 50%, take a small safety pin and puncture the coax. The pin should be allowed to short the shield to the center conductor. Starting at 5″, move slowly toward the terminated end of the coax. At one point in this process, the swr meter will drop. Now adjust the capacitor to a minimum meter reading. If necessary, for a minimum reading, move the pin now in much smaller steps to find the exact point at which the minimum reflected power is indicated. Cut the coax at this point. Trim and solder the end and ground it to the aluminum box.

It is apparent you can get some gain from this antenna, although it is slight. With a 1/4 wave as a reference of O.D.B., an approximate gain of 1.2 dB will be noted. Small as it may be, it's still gain.

There are other antennas manufactured for the GM Corvette, the AMC autos, and Chrysler products. These will all work if modified as I've just described. I would like to thank Tom Rehm K9PIQ for his help on and off the air. ■

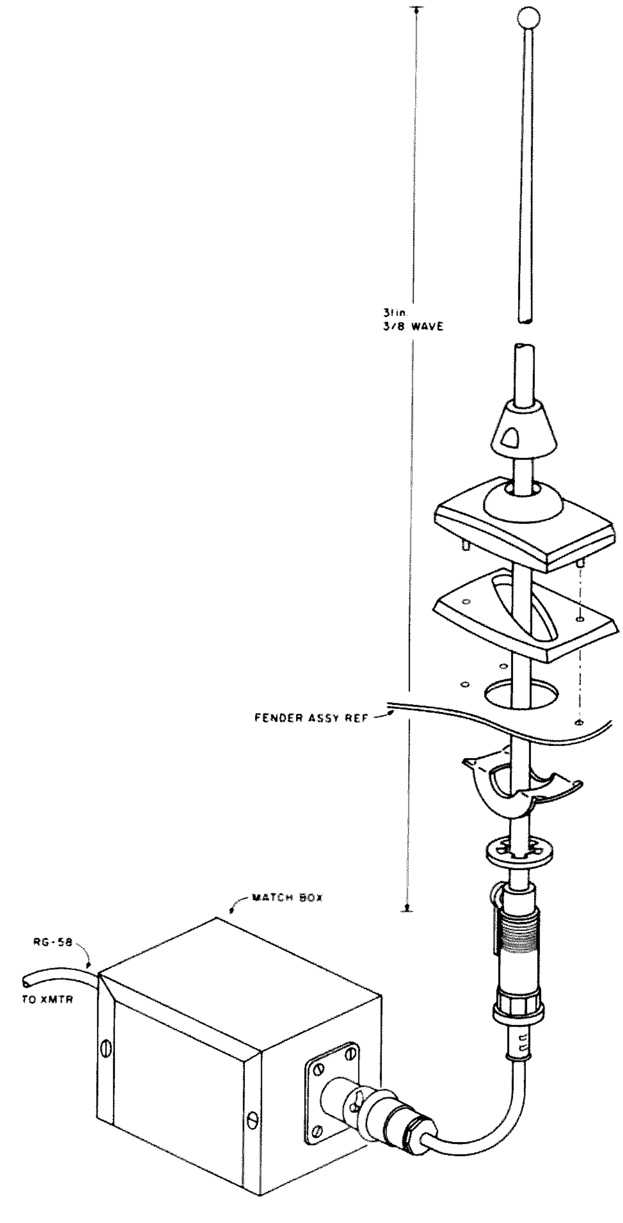

Fig. 3.

LETTERS

from page 61

might send someone up, as we wanted to do a story on the problem and how they would solve it. Not as easy as that, I found out. The FCC lacked the criminal jurisdiction, and the FBI would have to be contacted. OK, I said, and I called the Concord office of the FBI. They told me they needed authorization from the United States Attorney.

I placed a call to the US Attorney, who told me that he had received several complaints, including several from Senator McIntyre's office. He was going to authorize the FBI to investigate the case . . . fine, I said, and I called the FBI again.

I got the distinct impression from the FBI that dirtying the airwaves did not qualify as a "major crime," and that they would work on it at their leisure. There was one problem, however . . . they did not have the technical expertise to find the violator, so the FCC would have to become involved. The FCC told me that they had the technical expertise, but lacked the criminal jurisdiction. Ah, I said, Catch 22—so who would catch this person? The answer, unfortunately, was no one. He still operates on channel 19 almost nightly in Manchester.

You might say, "Who cares, CB is garbage band anyway . . ." The implications are far-reaching, however: If a CBer was to purchase a ham transceiver and begin operations on one of our bands, who would stop him? If this incident is any example, he might be on the band forever.

I am not sure that we have a problem with unauthorized per-

Continued on page 65

Richard Matthews WA4NWW
Box 185, Route 6
Scottsboro AL 35768

Better Than A Quad?

—*try a delta loop*

It has been said that, before anything worthwhile can be done, there must exist a need. In my case, the need was for a good cheap directional antenna for 15 meters. It had to be something much better than a dipole, but about the same cost.

After weeks of searching for a ready-made low-cost beam and being stunned by prices in the one-hundred- to two-hundred-dollar bracket, the idea finally came to me that I must consider a home brew job or stay with the dipole. So the search for that just-right design began. A quick look through one handbook offered first a simple two-element yagi and then a two-element quad. For DX, this handbook says the quad is better, but it is also quite large, fairly heavy, and needs mounting high off the ground. I have neither a tower nor a heavy-duty rotator, so the search continued.

After reading on, I found a brief article about an antenna that some DX operators consider to be better than a quad. It was described as fairly small for 15 meters and also lightweight. But why had I never heard one on the air? Why had I never seen one advertised for sale? There had to be some disadvantage. But there it was, in clear print: "Some DX operators say the delta loop is better than a quad." There was only one thing to do – build it and give it a try.

The description of construction of "the delta" was not very clear, although there was a formula for element spacing and loop lengths. (See Table 1.) After calculating the reflector length for the middle of the band, I came up with 48.3' total length, or 16.1' per side (not bad). The reflector length turned out to be 47.1' total length, or 15.7' per side (not bad, either).

However, after calculating the spacing using λ/0.185', I found that the elements would need to be 248' apart. No wonder nobody ever used a delta; it would be a monster. A 248' boom would be a little bit of a problem. Something was wrong. I checked my calculations, and they were okay. So I thought it had to be a misprint in the formula – λ/0.17 to λ/0.20 should have been 0.17λ to 0.20λ, I guessed. Anyway, this is the formula I used. I came up with a boom length of 10'0" (not bad), so my delta was built using 10'0" element spacing on 15 meters. See Fig. 1 for parts and assembly.

Assembly time from start to finish was no more than six hours, and no special tools were required for construction.

After finishing building the antenna and mounting a TV antenna rotator on a short mast only about five feet above the roof, it was very little trouble for my XYL and I to lift the 12-pound structure to its final resting place. The total boom height after mounting was only 20 feet from the ground and about 80 feet below the tops of dozens of hardwood trees on my lot.

Adjustment of the antenna gamma match was another easy matter. With the help of a neighbor ham, tuning took only five minutes. With the clamp bar all the way to the top of the 36-inch gamma rod, just a half turn of the capacitor brought the swr down to a respectable 1.1 to 1. To my great pleasure, I found that at no point across the entire 15 meter band did it rise above 1.5 to 1. Everything had gone fine so far, and there was only one test left.

That test has been taking place over the past two months, using an HW-101 Heathkit barefoot, mostly in the phone portion of the band.

The first few days of operation with the delta loop were spent with the antenna

$$\text{Reflector total length} = \frac{1030}{f(\text{MHz})}$$

$$\text{Driven total length} = \frac{1005}{f(\text{MHz})}$$

$$\text{Element spacing} = \frac{\lambda}{0.17} \text{ to } \frac{\lambda}{0.20}$$

Table 1.

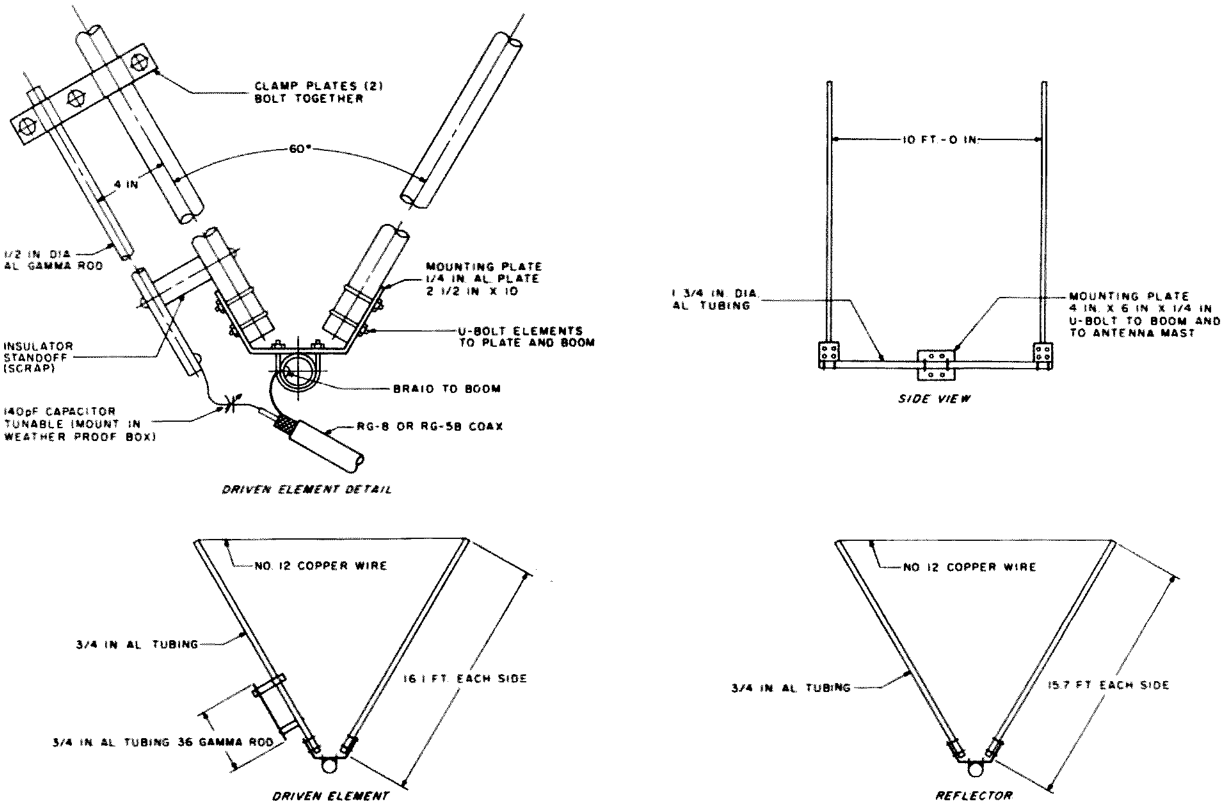

Fig. 1.

pointing west and with me enjoying compliments on the fine signal from Alabama which was reaching the west coast. One of the first good characteristics that I discovered about the antenna was that it was very directional, especially on receive. With a 30 dB over S9 signal from California being received, turning the loop off 90 degrees either way would knock the signal down to an S2 or S3 reading. So, with this in mind, I began searching for maybe just a little DX.

First a German field day station with an S9 report was added to my logbook. Then I had a first-time contact with Hawaii with another good report; then Alaska, another new one for me. So the delta loop was working, and I was well pleased.

More proof that the loop is a great DX antenna has come in the past few weeks. With not a lot of on-the-air time, mostly in the evenings after work, there have been contacts with Japan, Russia, and over 20 European countries, all with fine reports and with multiple contacts in most of them. My prize so far was a good contact with an Italian station running only three Watts on phone. My first CQ on the 15 Novice band netted Czechoslovakia and the Netherlands, also a low-power station.

If I sound thrilled, it is because I am. Of course, the performance of the delta would not seem so great to an operator who had been using a beam all along. But, for a fellow who has been using a dipole, it is a whole new world. It will give you a good chance in a big DX pileup, even if you are running low power with a low antenna height.

Three other local hams are now building delta loops for their own use, and, if you also would like to knock 'em for a loop, try the delta loop. It is better than a quad! ■

LETTERS

from page 63

sons operating on the ham bands, but if we did, then we might find that we would get little or no help from those charged with enforcing the Communications Act. Obviously, local authorities have no jurisdiction.

This incident has served to discourage me about the effectiveness of the Federal Communications Commission when it comes to violations of this nature. Sure, CB is bad, but it will never get any better without enforcement. I do not think that the CB part of the spectrum should simply be written off, but I am not sure what the solution is.

The implications of this incident reach far beyond one simple CBer who has a sick mind, and extend into our own bands as well. It is obvious to me that the FBI has better things to do then to get involved with radio complaints, be they CB or ham.

Thank you for such a fine magazine. I would subscribe to no other.

Dan Gingras WA1BLR
Manchester NH

MILES AHEAD

In the little over a year that I have been getting *73 Magazine*, I have read with interest your open and realistic editorials concerning amateur radio. Unlike the American Radio Relay League, which prints only for the betterment of "the League," you have demonstrated your concern for the amateur in general. There have been times when I thought that your attacks on the ARRL have been misguided, but after reading in *QST* about the

Continued on page 69

A. J. Massa W5VSR
PO Box 6075
New Orleans LA 70114

The Perverted Double Vee Antenna

—double your pleasure from 40m through 10m

A 70-foot free-standing tower with multi-element yagis for 40, 20, 15, and 10 meters, plus a rugged rotator to handle the Christmas tree, is the dream of almost every ham. But, oh, the expense, the complications involved in erecting such a monster, and don't even mention the XYL's screams of terror at the thought of that half ton of aluminum and steel hanging heavy over the heads of her beloved family, threatening to crush everyone and everything come the next windstorm, tormado, or hurricane.

Be not of weak faith! The dream may become a reality, if what you actually want is an antenna system with gain, directivity, excellent front-to-back ratio, rotatability, low cost, and relatively simple and safe construction — the perverted vee is your answer. Here follows a description of a phased almost vertical/almost horizontal trapped multiband dipole, one which will satisfy all of the above criteria.

There is an abundance of information available on the theory and performance of phased (driven) arrays — vertical, horizontal, and inverted vee systems.[1-8] I cannot add substantially to these data, but I suggest that you review what may be conveniently available to you. It is important for you to know that phased arrays work and that there is nothing very mysterious or complicated about constructing and adjusting them. The perverted vee is a phased array.

The Antenna

A study of the diagram in Fig. 1 shows the array to consist of two trapped dipoles, ABC and EFG, supported at a common tie point at the top of a 50' mast or tower. Feedpoints B and F are held away from the mast by suitable nylon cord. The lower ends, A and G, are pulled back into the base of the mast. The resulting configuration is that of two vees lying on their sides, with their tops facing each other. The dimensions of each vee and the trap values are such that resonance can be attained on 40, 20, 15, and 10 meters.[9,10] Spacing between feedpoints B and F is approximately 34'. This represents ¼ wave on 40 meters, ½ wave on 20 meters, 3/4 wave on 15 meters, and a full wave on 10 meters — classic spacings for phased arrays. Without becoming too technical or too involved in the details concerning trap construction, a few words regarding the traps are in order. Accepted theory and practice indicate that the L/C values given here will allow each dipole to work on the frequencies of interest and with acceptable vswr indications. Home brew traps can be made using ordinary coil stock or by winding 12-gauge or 14-gauge wire on wooden dowels, plastic rods, tubes, etc. The capacitors can be of the ceramic doorknob variety, high-voltage disc ceramics, or about 10 inches of RG-8/U. Whatever your preference, they must be grid dipped or noise bridged to resonance at 14.1 MHz.

My original attempt at home brewing suitable traps with coil stock and RG-8/U was successful, but I was not confident about their long-term stability and durability. Adequate weatherproofing was a problem. But, very recently, there have become available ideal commercially-made traps which fill the bill perfectly. They are the model 4-FG traps by Pace-Traps, Middlebury CT. I replaced the original traps with the Pace-Traps, having only to make minor adjustments in the wire element lengths to restore resonance of the

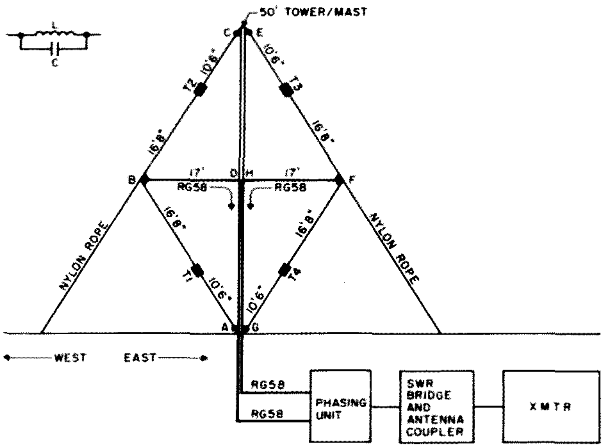

Fig. 1. Perverted vee phased array. Antenna #1 — ABC; antenna #2 — EFG. T1-4 — traps to resonate at 14.1 MHz; L — 10 turns, 6 tpi, 2½" diameter, 12 gauge; C — 25 pF (CL8505-25Z).

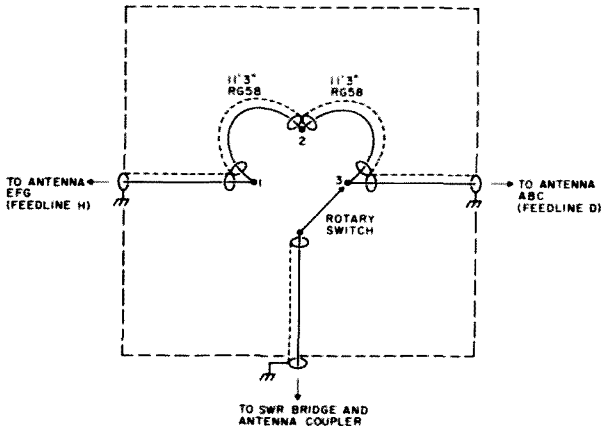

Fig. 2. Phasing unit.

antennas.

The Phasing Unit

The phasing unit (Fig. 2) is as simple a design as possible, requiring only a single-pole, 3-position switch, two 11'3" lengths of RG-58 solid (not foam) coaxial cable, 3 SO-239 chassis connectors, and a suitable small enclosure. An aluminum "Tite-Fit" box measuring 3½" x 6" x 8" is recommended.

The 11'3" lengths of phasing lines are not terribly critical. An inch, more or less, will not seriously affect the performance of the perverted vee. These lengths were arrived at from the formula for 1/8-wave coaxial phasing (delay) lines for 40 meters — 123 x .66/7.2 MHz. (.66 is the velocity factor for solid dielectric coax.)

The total of the two 11'3" lengths of coax, 22'6", provides electrical lengths of ¼ wave (90 degrees) on 40 meters, ½ wave (180 degrees) on 20 meters, 3/4 wave (270 degrees) on 15 meters, and 1 wave (360 degrees) on 10 meters. In switch position 2, Ø degrees phasing (broadside directivity) is accomplished, as both antennas are fed simultaneously in phase.

There is magic in the use of the two 11'3" phasing lines, giving the directive patterns shown in Fig. 3. You get all of that with only two short pieces of coax and one simple three-position, single-pole switch and no waiting for the rotator to grind its way around from east to west or north to south.

The Feedlines

Direct your attention once more to the RG-58 feedlines between the antennas and the phasing unit. Each of the two feedlines must be the electrical equivalent of the other. That is, they must be the same length. There can be no Mickey Mousing around on this point. It is strongly recommended that you use an antenna noise bridge or grid-dip meter to closely match the two lines once you have cut them to the same physical lengths. Although the total length of each line doesn't have to be more than just enough to reach the shack and phasing unit, I suggest that you make them multiples of 45 feet (½ wave at 40 meters). The reason for this suggestion is, of course, that it will make it possible for you to get valid vswr and resonance indications when you are adjusting the antenna wire lengths.

Don't be unduly concerned about using RG-58 (solid dielectric) coaxial cable, even if you are using a 2 kW PEP amplifier. Bear in mind that each feedline will be carrying only one-half the total output of your transmitter amplifier and that the average SSB or CW power in each line will be roughly half of that. In other words, if your 2 kW amplifier has an rf output of 1,200 Watts PEP, only 600 Watts PEP will be fed to each coaxial line. Since the average power is about half of the PEP power, each line will carry only about 300 Watts average power, which is well within the ratings of RG-58.

Swr Bridge and Antenna Coupler

Under the best of circumstances, no antenna will be perfectly flat — vswr 1:1; I guess I should say that most practical antennas will show some vswr other than 1:1. A pair of antennas, such as the perverted vee or any other phased array, will almost certainly show other than a "flat" condition to the transmitter output circuit, and the antennas will require a means of flattening out vswr ratios of as much as 2.5:1. If you already have a transmatch, matchbox, L-network, pi-network or some other such "line flattener" and swr bridge, use it between the phasing unit and transmitter (or linear amplifier), and adjust it whenever necessary for vswr 1:1 to the final rf stage.

A simple L-network will do the job. The circuit of one which I have used with excellent results is shown in Fig. 4. It will flatten out mismatches of up to 3:1.

Construction

Because the perverted vee is a system composed of two trapped dipoles, usual procedures for trapped dipole construction should be followed. Materials which you will need for construction of the antenna elements are listed in the parts list.

Begin by cutting the appropriate lengths of antenna wire. You might as well cut all the lengths for both sides of the perverted vee at the same time, with an extra 3" at each end of each length for fastening to traps and insulators. So, you will cut 4 lengths of 11' each and 4 lengths of 17'2" each. Scrape or sand the coating off the ends of the wire lengths to a distance of about 6" for final soldering.

If you decide not to use commercial traps, refer to construction details in the *ARRL Handbook*.[11] Unless you are an excellent craftsman and have had experience building antenna traps, you will save a lot of time and possible trouble by buying a set of 4 traps.

Now put one dipole together and then the other, using the first as a model. I started mine by tying a short piece of cord to one of the end insulators and then to the farthest corner of my backyard fence. Then I put one

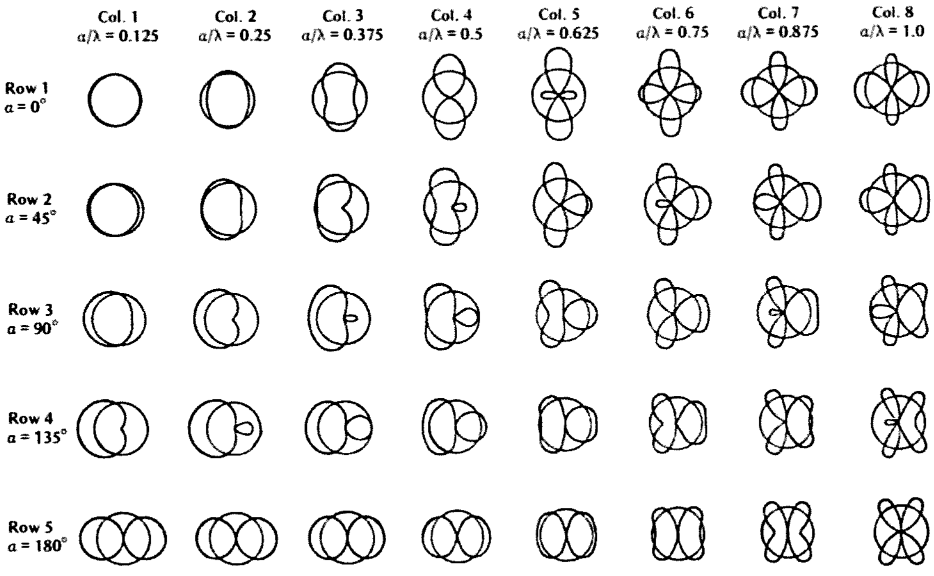

Switch Position	Approximate Horizontal Patterns 40 meters	20 meters	15 meters	10 meters
1	Col. 2, Row 3	Col. 4, Row 5	Col. 6, Row 3 Reversed	Col. 8, Row 1
2	Col. 2, Row 1	Col. 4, Row 1	Col. 6, Row 1	Col. 8, Row 1
3	Col. 2, Row 3 Reversed	Col. 4, Row 5	Col. 6, Row 3	Col. 8, Row 1

Fig. 3.

end of 11' precut length of wire through the insulator, pulling through the insulator 3" of wire and making the wrap. The other end of the wire is fastened to a trap in a similar manner. Next comes the 17'2" length. Fasten one end to the trap, as before, and the other end to the center insulator. Continue on the other side of the center insulator with another 17'2" length of wire, a trap, an 11' length of wire, and an end insulator. One dipole is finished, and, if you're lucky, you will find a convenient fence post to tie the finished end of the dipole to with a piece of cord, the same way as you started.

The other dipole can now be assembled right alongside, and it will be easy to make it identical to the first.

While the dipoles are hanging there taking a set, it would be a good time to prepare the RG-58/U feedlines – two feedlines, electrically identical to each other and long enough to reach from the antenna feedpoints to the shack. As I mentioned previously, it is a good idea for the feedlines to be multiples of half wavelengths at 40 meters – 45', 90', or 135' (I hope you won't need more than 90'; if you do, you should substitute RG-8/U).

The length of an electrical half wavelength of coaxial cable such as RG-58/U or RG-8/U (solid dielectric) is found by using the formula 492 x .66 (velocity factor)/F MHz. By substitution and solution for 7.2 MHz, the result is 45.1'. 45' is a good number to start with, as actual measurement with a grid-dip meter or antenna noise bridge usually shows this length to be slightly long. But, since it will take at least 42' of feedline to reach from the feedpoint of the dipole to the base of the mast, and it is unlikely that your shack is only 3' from the base of the mast, it is best to consider a minimum feedline length of 90'.

Assuming that this length will satisfy your need, cut a piece of coax to measure 90'. Measure it electrically and prune it to resonate as a full wave at 7.2 MHz. If the second feedline is of the same manufacture, you will be safe in cutting it to the same length as the first. Double check with the grid dipper or bridge to be sure. Remember, except for the convenience of being able to measure resonance of the antenna at some point remote from the feedpoint itself, length of the feedline isn't important, but predictability and reliability of performance of a phased array, such as the perverted vee, depend on the two feedlines being electrically identical to each other.

Once the feedlines are cut to final length, attach them to the dipole feedpoints, B and F, making sure that the coax shields are connected to the elements B-A and F-G and the coax center conductors to elements B-C and F-E. A piece of tape on the antenna wire next to the center insulator will help you identify the shield-fed side. It is a good idea to wrap a piece of tape around each length of coax 17' from the feedpoint. This will give you a convenient way to space the dipole centers 17' out from your mast. Tie a 35' length of nylon rope to each center insulator.

Now let's test and adjust the dipoles for resonance, one at a time, starting with dipole ABC. Raise end C (coax center conductor side) to the top of the mast (you do have a pulley or S-hook up there, don't you?), leaving a 4" to 6" space between the insulator and the pulley. Find the piece of tape you put at 17' down the coax from the center insulator and attach it to a place on the mast about 24' or 25' above the ground. A TV standoff insulator or a few wraps of electrical tape will serve the purpose. Take the other end of the 35' nylon rope tied to point B and walk away from the mast with it until the coax B-D becomes fairly horizontal. A little slack is okay, but make it as tight as good judgment says you should. Tie down the end of the nylon rope. Pick up the loose end of the dipole, A, and fasten it to the bottom of the mast with a short piece of nylon rope (4" to 6").

Dress the coax hanging from point D down the side of the mast, and use a few wraps of tape to secure it to the bottom of the mast. Take the rest of the coax to the shack and connect the end to your swr bridge, the bridge to your transmitter. Set the transmitter vfo to 14.2 MHz, load the transmitter for enough output to "drive" the swr meter to full scale forward, and check swr. From this point on, usual antenna adjustments for lowest swr indications should be followed, adjusting only the 16'8" lengths of the dipole at the feedpoint side of the traps.

Once the antenna is resonated at 14.2 MHz, set the transmitter to 7.2 MHz. Adjust the outer ends of the dipole, at insulators A and C, for lowest swr. The dipole should now be adjusted for resonance on 40, 20, 15, and 10 meters. It is not likely that the antenna will show 1:1 swr

on any, much less all, frequencies; but the dipole will be resonant, and that is the important thing. Excessive swr will be flattened out in the antenna coupler.

Dipole EFG should be put up and adjusted in the same manner as dipole ABC, but you must take down, or at least collapse, dipole ABC while adjusting dipole EFG. If for no other reason, take this on faith.

Once dipole EFG is resonated, leave it in place and reerect dipole ABC. The two dipoles must be exactly opposite each other for predictable results, and the feedpoints should be about 34' apart, give or take a foot. For the sake of neatness and safety, tape the two feedlines together from the base of the tower to where they enter the shack. A couple of wraps of electrical tape every 8' or so will do nicely.

As I mentioned previously, the phasing unit is a simple but most effective device. I credit my good friend and mentor, Jerry Swank W8HXR, for first showing me this circuit. The only "tricky" thing about its construction is to be sure that you connect the shields of the two pieces of coax together and to ground. Use short pieces of RG-58/U between contacts 1 and 3 and the SO-239s. These pieces of coax should be the same length.

With the switch in position 1, dipole ABC lags dipole EFG. In position 2, both dipoles are fed simultaneously for in-phase operation. In position 3, EFG lags ABC. Fig. 3 shows directivity for the system on the various bands.

Performance

To state gain, front-to-back, and front-to-side figures in decibels for a practical antenna system can be, and usually is, misleading. Whenever I see such data, I wonder if the system in point is compared with an isotropic source, real dipole (horizontal or vertical), or vertical (ground plane, ground mounted with radials). And there is the consideration of angle of radiation of the main lobe(s). The best I can tell you about the perverted vee is that you can expect gain of 3 to 5 decibels in the main lobes and attenuation of 10 to 30 decibels in the nulls. The comparison is made against a single-element dipole such as ABC.

The perverted vee is an efficient radiator and an excellent DX system. As a vertical, it provides good low-angle radiation and directivity. Compared with ground-mounted or ground plane vertical phased arrays, it performs well with less dependence on Earth reflections, radials, etc. Compared with phased inverted vees or horizontal dipoles, it is far less complicated to put up, requiring only a single supporting mast or tower. And like an inverted vee, it will provide reliable middle- and short-distance communications.

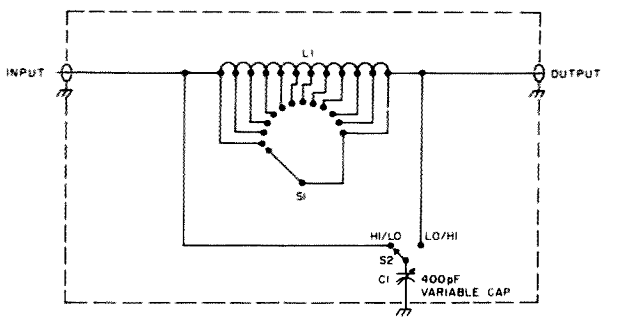

Fig. 4. L-network. C1 — 400 pF air variable capacitor; L1 — coil, 11 turn, 8 tpi, 2½" diameter, 11 gauge; S1 — 12-position rotary (phenolic okay to 300 Watts); S2 — SPDT rotary (phenolic okay to 300 Watts).

So, there it is, "an antenna system with gain, directivity, excellent front-to-back ratio, rotatability, low cost, and relatively simple and safe construction," with 4-band capability, as well. It's a whole lot cheaper than a linear amplifier (which does nothing to improve reception).■

References

1. Lee, P. H., "Vertical Antennas — Part IV," *CQ*, Sept., 1968, p. 37.
2. Lee, P. H., "Vertical Antennas — Part VIII," *CQ*, Jan., 1969, p. 46.
3. Lee, P. H., "Vertical Antennas — Part IX," *CQ*, Feb., 1969, p. 54.
4. Lee, P. H., "Vertical Antennas — Part XI," *CQ*, April, 1969, p. 38.
5. Hy-Gain Electronics Corp. Engineering Report, "Amateur Phasing."
6. Bibby, M. M., "Unidirectional Antennas for the Low-Frequency bands," *Ham Radio*, Jan., 1970, p. 61.
7. Schultz, J., "2 Elements Spaced A Quarter-Wavelength," *73*, Jan., 1968, p. 22.
8. Swank, J. A., "Four-Element Phased Vertical Array," *Ham Radio*, May, 1975, p.24.
9. Pace-Traps, "4FG Data Sheet" (Pace-Traps, Box 234, Middlebury CT 06762).
10. *The Radio Amateur's Handbook*, 1972, p. 592.
11. The Radio Amateur's Handbook, 1972, p. 588.

Parts List

120' antenna wire (I prefer 14-gauge enamelled copper. It is easy to handle, and the enamel coating prevents oxidation.)
70' nylon cord, 1/8" diameter
4 end insulators (ordinary 3" porcelain or 1" x 3" x¼" strips of Lucite,™
2 center insulators to accommodate RG-58/U (B&W, Hy-Gain, Pace, Greene, etc., or your favorite home brew type).
4 traps, resonated to 14.1 MHz (Pace-Traps or home brew)
2 TV standoff insulators (mast type)
1 50' push-up TV mast (if you don't already have one, or a 50' tower or 2 50' trees to string a catenary between)

LETTERS

from page 65

League's killing of CB on 220, the League's Code of Ethics to be forced upon everyone, and the League's futile efforts toward WARC '79, I realized who stood for amateur radio and who stands for themselves.

Your March editorial is a good point. When forced to show how much impact the Code of Ethics has had considering the amount of publicity they gave it, the League couldn't! Only a few distributors of gear had joined up, the main group of manufacturers telling the League to go jump! Your editorial also brought out into the open some new facts concerning the group known as HFers. While the League warns us of the sinister intentions of this group, only you have the courage to raise the point that by far these operators are the cream of the crop. While their actions are illegal (which most of CB was until the FCC legalized it), these operators attempted to do something about crowded band conditions, idiotic and dangerous operations, and the general improvement of their surroundings. Unfortunately, they have been held back in their growth to bigger and better things by the policies expounded by the ARRL. Rather than encourage them to advance beyond what they have now, the League drives everyone into Novice courses, the end result being that they can now use legally their Yaesus, Kenwoods, etc., on small portions of intensely crowded bands. Does the League encourage them to advance to General and above? No, they petition the FCC to widen the Novice band on 80,

Continued on page 73

Creeping Crud Got Your Signal?

—pollution is slowly destroying your beam

Dave Ingram K4TWJ
Eastwood Village, No. 1201 So.
Rt. 11, Box 499
Birmingham AL 35210

One of the most often neglected items in an amateur setup is the triband beam antenna. Once this lone radiator is purchased and placed atop a tower or mast, it is seldom maintained, until signals deteriorate to unacceptable levels or until the QTH is moved. This course of action is somewhat natural because access to a tribander is usually difficult and because factory-preset traps are seldom checked. As a result, many neighborhood insects find the tribander an ideal sanctuary in which to live and eventually create carbonized paths in coils and insulators.

This article will describe some basic maintenance ideas and preservation measures which can be used with triband beams to insure their long life. Any of these concepts will prove quite helpful when refurbishing an aged beam or vertical antenna.

While some beams can be accessed from their location atop a tower, the usual procedure involves waiting until they can be moved to ground level for servicing. Before disassembling a trapped antenna, carefully mark each element's position and the connecting sections of each element. Colored strips of electrical tape are ideal for this coding step. Likewise, place all spacers and/or mounting blocks in an appropriate place to avoid losing them. Murphy's law always reigns supreme while working with antennas!

The first "rebuilding" step usually involves replacing the antenna's coaxial cable with a new length of the same impedance. If you aren't using a low-loss foam dielectric cable, now's an ideal time to make the change. Rest assured the small additonal cost of foam cable is worth its outlay. (One of the best all-around types of 50-Ohm coaxial cable that I've found is Belden's 8214. It's mildly expensive, and its loss at 28 MHz is quite low.)

The next logical operation is disassembling the various pieces of connecting tubing, cleaning their contact areas, and then reassembling them. While this step may seem somewhat trivial, it can make a noticeable difference in antenna performance. Should such connections appear at current loops on the antenna, a mere fraction of an Ohm could reduce signal

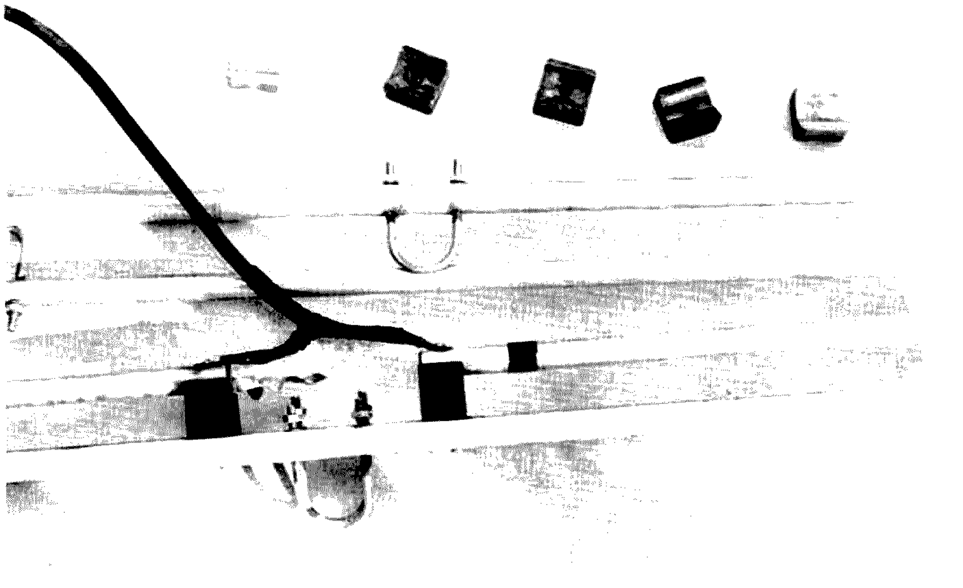

Photo A. Disassembled antenna elements are placed in a logical sequence and color coded with tape before rebuilding efforts begin. Remember to also color code the boom and keep track of the mounting blocks.

strength. As a (remote) example, you've probably noticed how cleaning the battery contacts on an automobile also reduces resistance and often permits a weak battery to crank a car. Although sandpaper cleans antenna elements very well, replacement packages of "contact grease" can usually be purchased from the antenna's original manufacturer. Clean the elements individually to eliminate any possibility of cross-connecting them during reassembly.

Next, disassemble the traps, and perform whatever maintenance is indicated by their condition (assuming, of course, that your unit doesn't employ hermetically sealed traps). Overlooking this step may render your rebuilding efforts worthless, so here's a trap-reworking guideline.

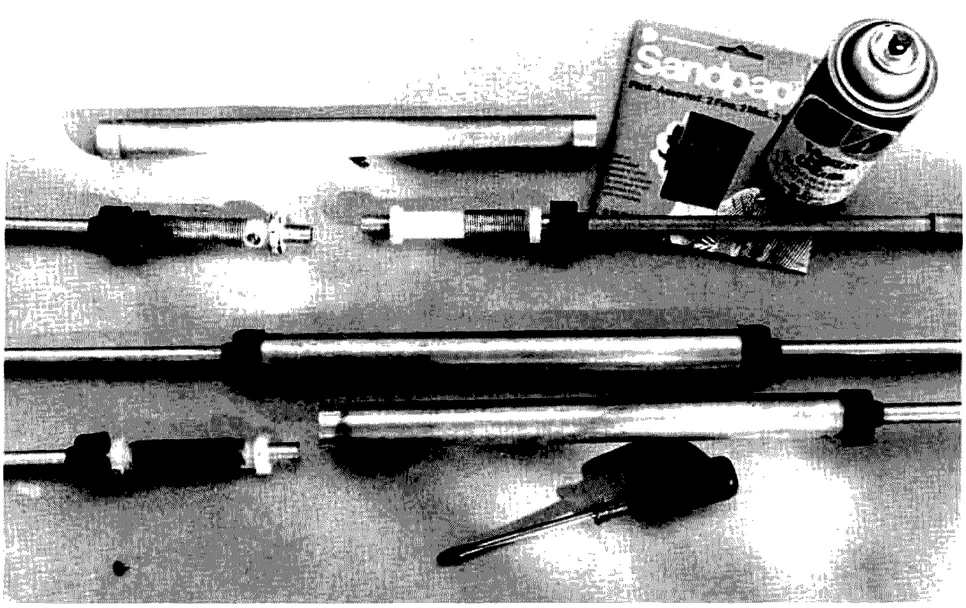

Photo B. This shows what's in a trap and how it's disassembled. The coil in the upper left was charred by a carbonized path, as described in the text. The driven-element coils are coated with Corona Dope to improve rf insulation.

First, spread a small amount of petroleum jelly near the boot on each end of a trap. Then, using a circular rocking motion, free the boot and slide it back slightly. This permits access to the coil's mounting screws. Carefully remove the screws and pull each end from the trap's outer tubing. Clean the coils with a soft brush, remove any foreign matter, and repair any unfortunate "surprises" which may be found.

One typical example of such a "surprise" is the carbonized path shown on the left top element of Photo B. Apparently, a spider crawled through a drain hole in the director's trap and became lodged there during transmissions (such accidents are well known among broadcast engineers). Eventually, the rf energy induced into this coil charred its polystyrene form and warped one end of the coil. This trap was rebuilt by carefully rebending the coil, cleaning the form of all carbon deposits, and moving its screw connection 180 degrees on the form. A light coating of Corona Dope was also used to seal the damaged area.

The next step involves lightly coating the driven element's coils with Corona Dope. This will prevent dampness accumulation and will make the traps high-voltage proof. Although the coils are darkened by the Corona Dope, it doesn't adversely affect their performance.

Finally, the antenna is reassembled and sprayed with a liberal coating of Krylon™ clear plastic. Then, it's placed back atop the tower or mast.

I tried one other modification on my beam which proved very worthwhile. A W2AU 1:1 balun was installed at the driven element, and it improved performance appreciably. The swr also decreased, though that change could also have been due to the trap rebuilding efforts.

In conclusion, I would definitely say that reworking aged trap antennas (either beams or verticals) is truly worth the effort and time. Why not give it a try the next time you become displeased with that antenna you've enjoyed for several years? The results may amaze you. ■

LETTERS

from page 69

thereby keeping many from progressing further. With incentive licensing, courtesy of the League, the bottom three classes of American amateur licenses now have the majority of amateurs. Why should they continue when all they have to gain is more room to send CW, which is rapidly becoming an outdated mode of communications, and when they learn of the many witch-hunts such as intruder watches and the Code of Ethics which the ARRL tries to force down their throats.

Unfortunately for the United States, there are not more people like you, Wayne, who are willing to stand up for their rights and be counted. In Canada we have the same problem, only it goes by the name of the Canadian Radio Relay League. However, there is a second "national" group in Canada, the Canadian Amateur Radio Federation, which has been successful in thwarting many of the same stupid moves of the League in Canada. Recently, a CARF-sponsored symposium with the Department of Communications was held to plan for the future needs of the Canadian amateur. The DOC proposed a no-code VHF-UHF ticket (completely legal under international rules), which with some major adjustments appears certain to become a reality. To be sure, the League was there with its own proposal for a Novice ticket very similar to that in the U.S. today. Fortunately, this was shot down. Not to let a dead issue stay dead, the CRRL now wants to limit the existing "amateur" license in Canada for the first six months of operation to CW only. After six months, an en-

Continued on page 75

Towering Low Band Antennas

—berserk mathematician figures impedance

Walter Schulz K3OQF
3617 Nanton Terrace
Philadelphia PA 19154

Recently there have been some articles written about verticals that explained the electrical parameters by mathematical expressions.[1,2,3] The main emphasis of one article was placed on a formula developed by Dr. Sergei A. Schelkunoff of Bell Telephone Laboratories.

$$Z_o = 60\ [(\log_e \frac{2h}{a}) - 1]$$

The vertical is compared to an open-ended transmission line and its characteristic impedance is found. Once the characteristic impedance is known, the conjugate impedance values (resistance and reactance) are found by a transmission line formula. These conjugate values have also been tabulated in graphs cited in the reference material. To use the graphs, Z_o values must be known, along with antenna height in electrical degrees.

This article addresses itself to determining the radius of irregular shapes, such as towers used in amateur radio. Why towers? Lately, there is a trend among amateurs to series feed or shunt feed their towers on 160 and 75 meters. If the above equation is to be used in solving for conjugate impedance of a tower, its irregular shape must be equated to a circle.

The example shown here will be a three-sided tower — Rohn model 25. This tower measures 12½ inches on each of the three sides. The next requirement is to find the center of the equilateral triangle.

To accomplish this, the following steps are necessary:

1. Get one piece of note paper, a right triangle, a ruler, and a compass.
2. The tower triangle is too large to be drawn on note paper, so divide the 12½ inches by 2, which equals 6¼ inches. Use this value from now on in this problem.
3. Construct line A 6¼ inches long, as shown in Fig. 1. Then divide the line in two, marking off the halfway point 3-1/8 inches (B) from each of the line ends.
4. Construct line C 7 inches long, perpendicular to line A.
5. Construct line D 6¼ inches long from the end of line A on the left side of the triangle to line C.
6. Construct line E 6¼ inches long from the end of line A on the right side of the triangle to line C intersecting with line D. This completes construction of the equilateral triangle. (Note that each angle is 60 degrees.)
7. On lines D and E, measure the halfway points or divide the line in two, as was the case in step 3 for line A.
8. On lines D and E, draw perpendicular lines F and G at the halfway points so that lines F and G intersect with line C.
9. At the center point, use a compass and draw a circle

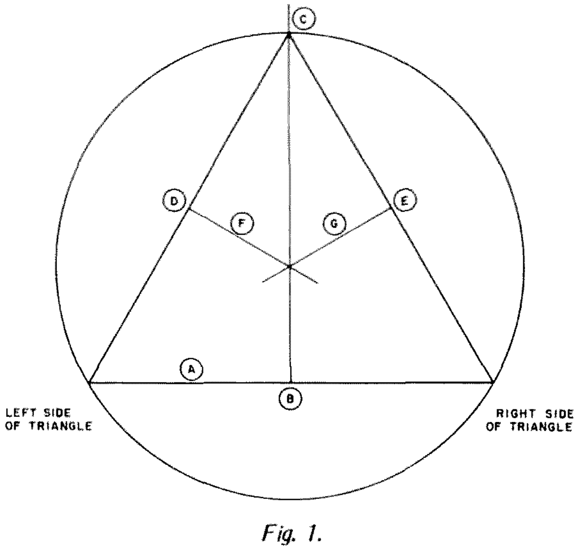

Fig. 1.

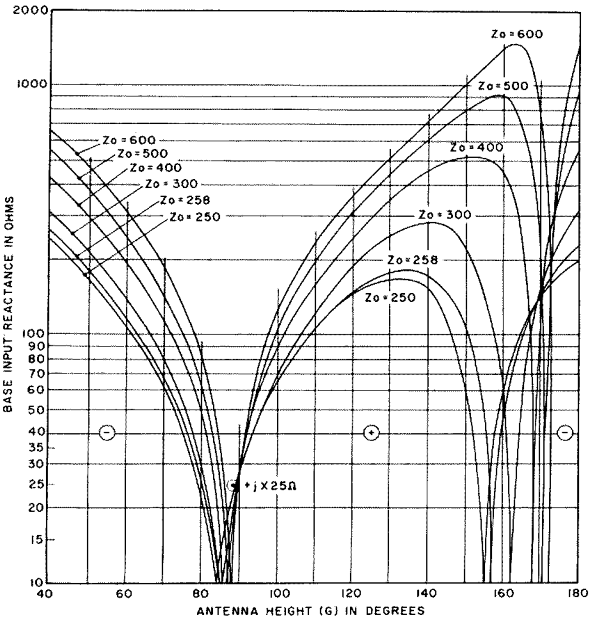

Fig. 2. Base input reactance of cylindrical antennas over a perfectly conducting ground plane.[6]

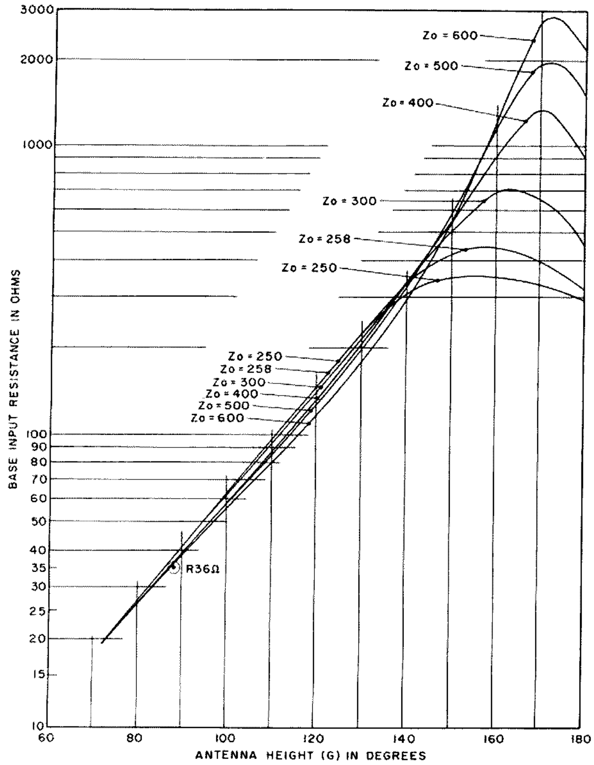

Fig. 3. Base input resistance of cylindrical antennas over a perfectly conducting ground plane.[6]

around the triangle points. The circle should touch all three triangle points, proving that the center is correct. Now measure the radius to each vertex, finding that the three values each equal 3½ inches.

10. The triangle dimensions were reduced by 2 to fit the drawing paper. Multiply 3½ inches by 2, which equals 7 inches. Seven inches is the real radius value.

The final step is finding the equivalent radius[4] represented by a three-sided figure now that the radius is known.

a = radius of outscribed circle

a_{eq} = equivalent cylinder radius in inches

$a_{eq} = a(0.4214)$

a_{eq} = 7"(0.4214) = 2.95 inches

Using Dr. Schelkunoff's equation, the characteristic impedance can now be found. Let h be the tower height (in this example, 60 feet); let a be a_{eq}, the equivalent radius.

$$Z_0 = 60\left[\left(\log_e \frac{2h}{a}\right) - 1\right]$$

$$= 60\left[\left(\log_e \frac{(2)\,(720'')}{2.95''}\right) - 1\right]$$

$$= 311.44\ \Omega$$

Note: If the example antenna operates on 4 MHz, the wavelength is 246 feet. To find electrical degrees, do the following:

$$\lambda = \frac{984}{f\ \mathrm{MHz}} = \frac{984}{4}$$

$$= 246' \qquad \frac{(h)\,(360)}{\lambda}$$

$$= \frac{(60')\,(360)}{246'} = 87.8^\circ$$

Using the graphs in the reference list shows this tower's conjugate impedance value to be R 36 Ohms + jX 25 Ohms[5,6] over a perfectly conducting ground radial system.

Since I do not own a General Radio rf impedance bridge (916A or 1606B), this method saved me a lot of time and effort in series and shunt feeding towers. ■

References

1. "Surprising Miniature Low Band Antenna," *73*, August, 1976, pp. 28-36.
2. "The Multi-Band Trap Antenna," *CQ*, February, 1977, pp. 26-72.
3. "Antenna-Transmission Line Analog," *Ham Radio*, May, 1977, pp. 29-39.
4. Jasik, Henry, *Antenna Engineering Handbook*, McGraw-Hill, Inc., New York, 1961, p. 3-7.
5. Jasik, *op. cit.*, pp. 20-6, 20-7.
6. Smith, Carl E., *Theory and Design of Directional Antennas.*

LETTERS

from page 73

dorsement can be obtained for operation on 10 meters and above. Thus, if they now have their way, no Canadian amateur will be allowed to use voice communication for the first six months of his first amateur license. In the U.S., at least one doesn't have to get his Novice certificate to proceed, but can get, for example, the General. Not so in Canada, if the League has its way. That's one hell of an incentive, when after studying and passing an exam harder than the General ticket in the U.S., the person must stay on CW for six months. Thank you ARRL-CRRL. Thanks for nothing!

Again, Wayne, thanks for being open-minded and for telling it like it is. I may not agree with everything that you say, but you're miles ahead of the American Radio Relay League.

William Leal VE3IHB
Windsor, Ontario

AFFORDABILITY

I have been a ham for almost two years now. When I first got into amateur radio, someone told me that it was a rich man's hobby. At that time I disagreed, but after looking at some of the prices of new HF equipment, I think he may have been right.

With the cost of raising a family, it is very hard to justify $700 for a transceiver, $200 for a beam, and several hundred more for an antenna support. OK, maybe you don't need all this, but who has a chance for making good contacts with all the high-power stations around? Sure, low power will get results, but I started on low

Continued on page 79

James E. Taylor W2OZH
1257 Wildflower Drive
Webster NY 14580

The 80 Meter Pile Crusher

—the ultimate vertical?

There is at least one advantage to operating exclusively on one amateur band – it encourages dreams of better antennas for that band.

At W2OZH, the band is 80 meters, and such hallucinations have led to a novel mobile configuration[1] and to an effective direction-switchable array using horizontal elements.[2] The satisfaction afforded by this latter configuration has led to speculation regarding direct comparison with a similar phased array using vertical elements.

"A Low-Frequency Phased Array"[2] described preliminary attempts to utilize the sixty-foot supporting masts as vertical radiators. However, subsequent attempts to improve this vertical system using additional ground radials were disappointing. Two factors contributed to this lack of success: (1) the undesired cross-coupling from the verticals to the horizontal elements, and (2) the proximity of the house, which interfered with the laying of a full symmetrical radial system. Thus, each radiator did not form a simple resonant circuit (for maximum current) and the radial system permitted a high degree of near-field ground penetration (with attendant ground losses).

As a result of these defects, I decided to start from scratch on a vertical array composed of two resonant radiators sixty feet (λ/4) apart in the rear lawn, sufficiently far from the house to permit a symmetrical ground radial system to be laid. This article describes the constructional details of these radiators.

Operating Principles

Sevick[3] and others have shown that vertical antennas which are much less than one-quarter wavelength long can be effective radiators if: (a) the losses in the antenna element and matching system are kept small, and (b) a low-loss image plane is provided using a large number of radials approximately a quarter wavelength long. Elwell[4] has pointed out that the current loop of a resonant vertical antenna can be moved upward away from the base by changing the tuning. The qualitative diagrams are shown in Fig. 1.

However, before you set about just copying what others have done, it is worthwhile to review some fundamentals in the light of where you want to go.

If you are to have low losses in the antenna element, you need only use large diameter conductors, including any loading coils which are used. However, you also need to consider what is necessary to achieve a low-loss image plane. Maxwell[5] has depicted clearly the rf current flow in the ground system of a typical vertical antenna (see Fig. 2).

The power loss in such a ground system occurs both in the resistance of the radial system and in the ground beneath the radial system (due to field penetration of the earth). Thus, if you wish to decrease these ground system losses, you should try to decrease the current flowing in the radial system near the base of the antenna. This will serve both to decrease the direct resistive losses and to decrease the penetrating field.

Referring to Figs. 1(c) and 2, you can see that Elwell is on the right track; the current at the base of the antenna and out into the radial system is small for this arrangement. However, his series feed at the base of the antenna presented matching problems due to the high impedance at this point. You need to retain the low base current, yet be able to feed the radiator directly from a low-impedance coaxial feedline without a matching network.

For guidance, let's review some antenna fundamentals. The basic rf resonance of a straight conductor is dipolar, that is, the instantaneous voltage at one end is (+) and at the other end (-). This is the mode shown in Fig. 1(b). It must be noted that, at resonance, the reactance is cancelled, and, at all points along the antenna, the impedance is a pure resistance. If you now look at Figs. 1(a) and 2, the so-called "λ/4 monopole," you see that the fundamental mode of resonance is still dipolar, that is, (+) to (-). The only difference is that the image plane acts like the other half of the λ/2 dipole. If you start with the situation at 1(a) and add top loading, you can arrive at the current distribution at 1(c).

Now, what does the impedance picture look like? In each of the three cases, the impedance has a high value at the top, marked (+), and at the dipolar image points, marked (-). At the intermediate position where the current is a maximum, the impedance has a minimum value – ~36 Ohms for the image plane antenna and ~72 Ohms for the ideal dipole, Fig. 1(b). The ideal way to feed such an antenna using

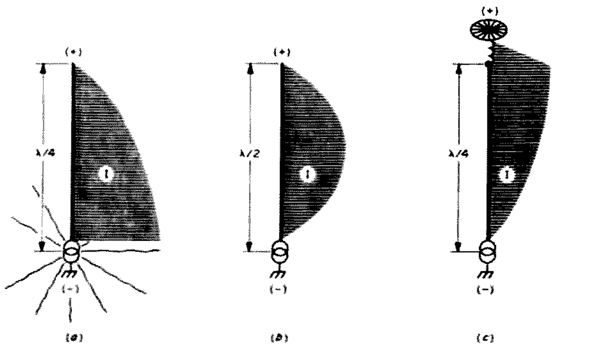

Fig. 1. Current distribution on three vertical antennas. The tuned circuit at C simulates ¼ wavelength.

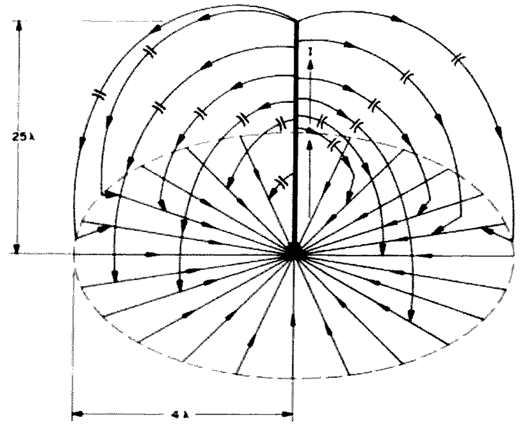

Fig. 2. The hemisphere of current which flows as a result of capacitance of a λ/4 vertical radiator to the earth or a radial system. At frequencies above 3 MHz, rf currents flow primarily in the top few inches of soil, as explained in the text. Ground rods are of little value at these frequencies, and spikes or large nails are sufficient to secure the outside end of each radial wire. With a sufficient number of radials, annular wires interconnecting the radials offer no improvement in antenna efficiency, as the current path is radial in nature.

52-Ohm coax would involve separating the antenna at a point near X, in Fig. 1(c), such that the impedance is 52 Ohms. But how can you avoid interaction with the shield of the coax? Read on!

Referring to Fig. 1(c), connect the bottom of the antenna directly to ground (eliminating the generator shown). Now assume that the bottom section of the antenna is in the form of a hollow pipe. If you place a coaxial feedline inside this pipe with the shield connected to the pipe at the top (point X) and the center conductor is then connected to the insulated top section, the feedpoint impedance, as described above, is presented across the feedline. If you choose the point X at an impedance level of 52 Ohms, the feedline will be exactly matched into 52 Ohms, resistive.

Thus, you have, in principle, arrived at a resonant vertical antenna configuration which has its current loop above the ground (thereby reducing current in the radial system) and which presents a perfect match to a low-impedance coaxial feedline. As a fringe benefit, the base of the antenna is at ground potential, a fact which offers simplified mechanical construction.

CONSTRUCTIONAL DETAILS

The Antenna

Two antennas were constructed following the principles outlined above. The antenna elements were assembled using aluminum irrigation pipe, as shown in Fig. 3.

There is, of course, a wide variety of constructional material available, but I have had such good luck using aluminum irrigation pipe for support of other antenna installations that this was an obvious choice in the present instance. The two vertical antennas were constructed at different times — the second approximately one year after the first. For this reason and because I wanted to experiment with different geometries (yielding different input impedances), I used different lengths of pipe for the two antennas. The compensating adjustable parameter is the coil inductance. The dimensions used for the two antennas are shown in Table 1.

The base section of each antenna is a length of three-inch-diameter irrigation pipe. The top sections are two-inch-diameter pipe. The top section telescopes inside the bottom section for a distance of three feet. Insulation is provided by PVC pipe fittings, as indicated in Fig. 3. The sections are anchored in position by hose clamps and by strategically positioned metal screws. Hose clamps are also placed at points of high stress to strengthen the base section.

The coil support is a 2-3/4-foot length of PVC pipe with an i.d. of 2 inches. The two-inch aluminum pipe telescopes into the ends of the PVC a distance of 12 inches, leaving a 9-inch length of insulation where the coil is located. The coil is approximately three inches long (30 turns, maximum) to provide an excess of turns for tuning adjustment. Since the coil fits loosely over the PVC pipe, it is supported by the connecting wires. After experimentation was completed, the coil was wrapped with 20-inch-wide fiberglass tape for additional support and protection.

The Adjustable Top-Loading

The key enabling device

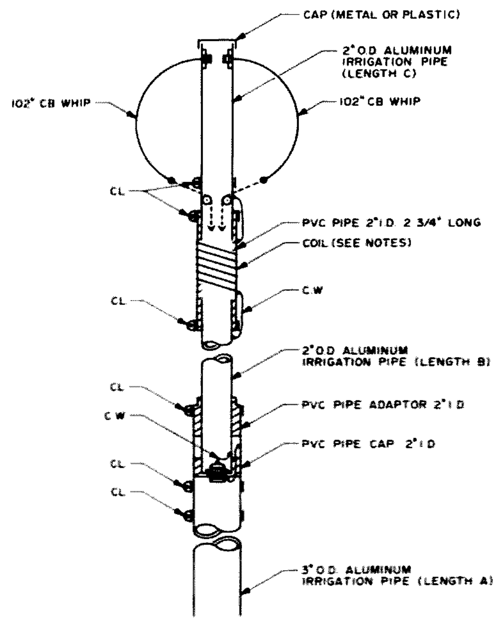

Fig. 3. Antenna construction details. Notes: C.W. — connecting wire to solder lugs; CL. — radiator hose clamp; Coil — Polycoil 2½" diameter #16, 10 turns per inch.

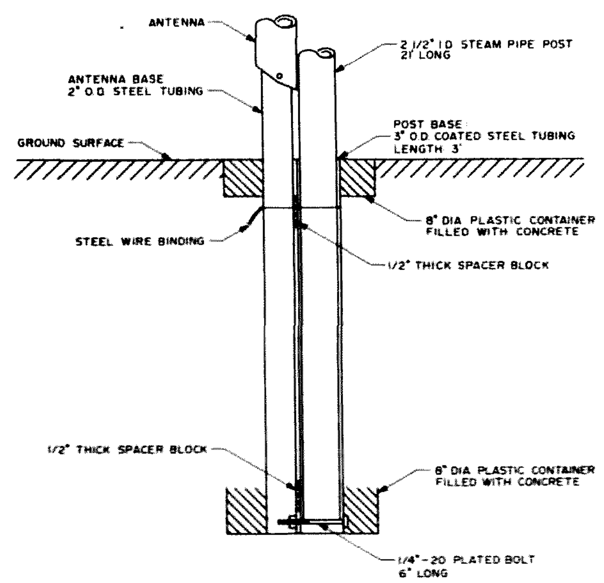

Fig. 4. Supporting base construction details.

	Dimensions			Coil
	A	B	C	Turns
Antenna no. 1	30'	11½'	8½'	20
Antenna no. 2	20'	12'	12'	12

Table 1. Antenna dimensions.

which makes this antenna system practical is the method of tuning the radiator to resonance from the ground level. Usually, a roller inductor or other tuning method is necessary at the base of the antenna, which sacrifices mechanical and electrical flexibility. Remember, you want to have the antenna self-resonant so that, in effect, when the feedline is connected, it works into a resistive load.

The desired tuning is achieved by means of an adjustable top-loading arrangement made of two Citizens Band whips which project from either side of the top of the radiator. Lengths of nylon cord are attached to the ends of these whips and pass through awning pulleys which are supported from the mast by a hose clamp. A length of nylon cord runs down the mast to the ground level. Pulling on this cord flexes the whips from the horizontal positon to the circular configuration shown in Fig. 3, thereby producing the desired variation of capacitance between the top of the antenna and ground. This adjustment is sufficient to cover the entire 75 meter phone band without changing the coil inductance – a very useful capability.

The Antenna Support

It was desired that this vertical antenna be placed in an unguyed position in the back lawn of a typical suburban lot. Accordingly, a 21-foot length of 2½-inch (nominal) steam pipe (2-7/8 inches o.d.) was mounted in the ground to serve as a supporting post. Inasmuch as this was to be an adaptable installation for future experimentation rather than a fixed arrangement, the supporting pipe was mounted in such a manner that it could be removed without disturbing the buried system of radial ground wires. This was achieved by telescoping the supporting post into a three-foot length of three-inch-diameter coated steel tubing buried in the vertical position as shown in Fig. 4.

It will be seen that the antenna is pivoted at the base on a 5/16-inch-diameter bolt which passes through a length of two-inch-diameter steel tubing, which is attached to the base for the supporting post. This tubing, which projects approximately four inches above the ground surface, is assembled against the post base to form a rigid assembly before being cast in concrete as shown. Thus, when completed, this assembly forms a rigid buried support structure, made of the antenna mounting base and the post mounting base. The supporting post is raised to the vertical position and then lowered into the pipe base to complete the antenna supporting structure; this is a two-man job.

Antenna Erection

As shown in Fig. 4, the antenna is pivoted at the base on a 5/16-inch-diameter bolt. The antenna can be "walked up" – easily by two men or with greater strain by one (young) man. If I am that one man, I prefer to use a rope hoist. After erection, the antenna is held rigidly in place by two hose clamps which are tightened around the antenna and the supporting pipe.

The coaxial feedline passes upward through the antenna, and its shield is connected to the lower section of the radiator, both at the feedpoint and, by means of a length of flexible braid, at the base of the radiator. Here, it is connected to the center of the system of ground radials. The coaxial cable is then buried so that it becomes a part of the radial image plane.

The Image Plane

Sevick and others have shown that a large number of ground radials is required if an effective image plane is to be achieved in localities where the soil has but modest electrical conductivity.

Guided by this previous work and by the dimensions of the available plot, I chose to use for each vertical radiator 73 radials (5° radials plus the coaxial feedline), each having an approximate length of one-quarter wavelength. The image plane took the form shown schematically in Fig. 5. For clarity, not all of the wires are shown in the sketch. Since this vertical system was superimposed over the grid of parallel ground wires (spaced ten feet apart) which were used for the horizontal phased array,[2] the image plane is connected to this grid by soldered crossovers at the median grid wire, as shown.

ADJUSTMENTS

Resonance

After erection of the vertical radiators and completion of the image plane installation, it is only necessary to adjust the system to resonance. This is accomplished by means of a noise bridge. The two feedlines were first trimmed to an electrical length of one wavelength at the operating frequency (3.955 MHz). Since the feedline is an integral multiple of half waves, the measurements are as if made at the antenna feedpoints directly. The noise bridge was connected at one antenna input, while the other antenna was terminated in a 52-Ohm resistive load. The resonant frequency is measured by detection of the null of the noise bridge. This resonant frequency is then altered by pulling the rope which flexes the whips at the top of the antenna. For example, if the measured resonant frequency is too high, the whips are extended more, thereby lowering the resonance point. If there is, at first, not enough range in this adjustment, the antenna is lowered and the number of coil turns is increased. Once the desired resonant frequency is attained, this antenna is terminated while the other radiator is adjusted. A slight "tweaking" of the first antenna now completes the adjustments.

Matching

Referring to Table 1, it is seen from a comparison of

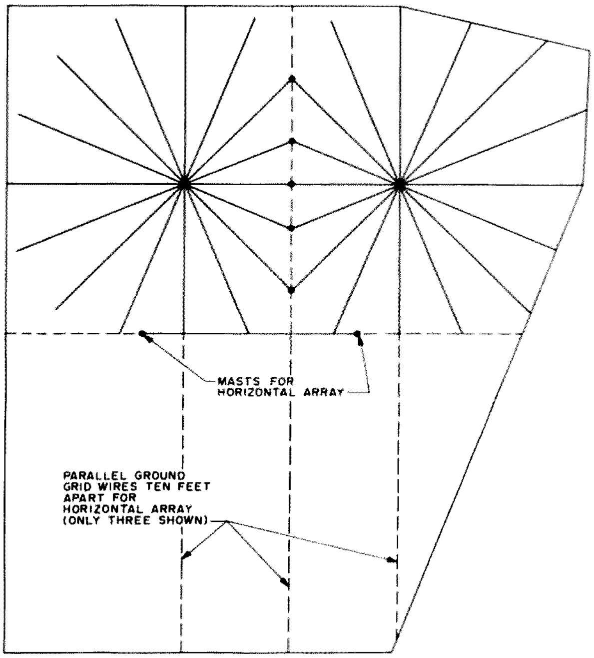

Fig. 5.

dimensions that probably the feedpoint impedance of antenna no. 1 will be greater than that of antenna no. 2. This is surmised because, viewed as a dipole-image antenna system, this feedpoint is probably further off center than is that for antenna no. 2. This proves to be the case — noise bridge measurements indicate this feedpoint resistance of no. 1 to be 70 Ohms, whereas that for configuration no. 2 measures 40 Ohms. Rather than change the antenna dimensions to realize an input resistance of 52 Ohms for each, it is simpler to utilize broadband toroidal transformers to match each antenna to the 52-Ohm source.

Since the frequency used is relatively low, the transformers were wound with 15 turns of zip cord on a 2-inch-diameter toroidal form (T-200). These units were connected in the autotransformer mode, and, for each, the tap was adjusted empirically using the noise bridge. Residual inductance was tuned out using series capacitors. The details for these transformer connections are shown in Fig. 6. The input resistances were each adjusted to 50 Ohms.

Operation

This antenna system has been operated as a two-element phased array using the same delay-line switching manifold as has been used with the horizontal system.[2]

Electrically, the operation is as expected. Swrs are below 1.1 for all combinations of the radiators. The front-to-back ratios are consistently above 10 decibels. The phasing is monitored by the Lissajous pattern on an oscilloscope. The in-phase, quadrature, and 45° patterns are as expected.

As mentioned earlier, detailed comparisons with the horizontal array are planned. Preliminary results indicate that, for short-distance (out to fifteen miles) ground wave, the vertical system is consistently stronger. For distances out to about 200 miles, the horizontal system is substantially stronger. For distances greater than 200 miles, the vertical system is stronger only if propagation conditions are favorable. It is my feeling that this will be strongly dependent upon the sunspot cycle. It would appear that the low-angle refraction for this relatively long wavelength radiation may depend upon the "smoothness" of the ionosphere. If this is true, one might expect inferior performance of the low-angle (vertical) system during sunspot lows when the ionization is "rough," producing excessive scattering during the oblique-angle refraction. As the sunspot cycle improves, one would expect the ionization to be more uniform, or "smoother," so that the low-angle antenna system would come into its own, perhaps producing substantially stronger signals than the higher-angle horizontal system. If this proves to be true, it would explain much of the conflicting data which has been reported down through the years regarding the effectiveness of vertical antenna systems on 75 meters. ■

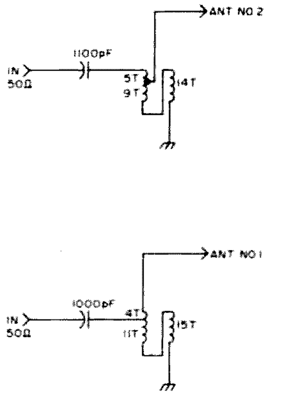

Fig. 6. Toroidal matching transformers.

References

1. "The Mobiloop," J. E. Taylor, *QST*, November, 1968.
2. "A Low-Frequency Phased Array," J. E. Taylor, *73*, July, 1974.
3. "The W2FMI Ground-Mounted Short Vertical," J. Sevick, *QST*, March, 1973.
4. "Top-Loaded Vertical for 80 Meters," H. G. Elwell, Jr., *Ham Radio*, September, 1971.
5. "Another Look at Reflections," M. W. Maxwell, *QST*, April, 1974.

LETTERS

from page 75

power (5 Watts), because it was all I could afford, and nearly quit amateur radio. I guess I could fill page after page about lost contacts and no contacts because of QRM from the really "strong" stations on nearby frequencies.

It seems like this letter has started one way and is headed somewhere else, but the point is: "How can the average person afford an A-1 radio station?"

I enjoy amateur radio. I know it is growing because there are more hams in our area than there have ever been. With this growth, there have been growing pains. I have some suggestions for helping:

1. Manufacturers are putting more and more into each radio. Why not start with a radio that is one band (40 meters) and operates CW only? Then, as the amateur progresses, the radio would have add-on accessories to increase the number of bands and add SSB and other such items to upgrade the equipment.
2. Why don't they allocate band segments for low-power (QRPp) use?

These things will not solve *all* the problems of amateur radio, but I feel that they would help the Novice operator in two ways: He will be able to afford the equipment to operate and he will therefore retain his interest in amateur radio.

Maybe somebody agrees with me—maybe not. Anyway, I've said it and I believe it.

Lewis M. Todd WB5SYP
Natchez MS

I'd be interested in letters from readers with ideas on how to work DX without spending a lot

Continued on page 83

Bill Desjardins W1ZY/LAØBP
Heggevelen 17b
1481 Li
Norway

Phased Verticals For Easy DX

—and under $20!

Congratulations! Your General ticket has finally arrived from the FCC gods. Now you can operate those segments on 80, 40, 15, and 10. But most interesting is the privilege of operating on the 20 meter band.

After a few days of listening to the most interesting HF band, you will notice the following: Most of the boys who really work DX well will not be using a dipole. The most common antenna in this group is the famous three-element beam.

Now, you will think, "Boy, I'd really like a three-element beam! How much is one? Oh, that much?! ... How much used? ... That's just as bad! I'm a General with a Novice's bankbook. I can't pay that much! What I'd like is a nice inexpensive antenna which performs nicely on DX, say, for under twenty dollars. I'd like it to be easy to construct and operate."

Obviously, if you've taken a look at the prices for aluminum tubing, a three-element home brew yagi isn't the economical answer. And the neighbors might not appreciate a quad. If these two restrictions apply to you, my antenna is for you.

I'm talking about a pair of phased verticals. This antenna has a 3 dB gain over a dipole. (Doesn't even this amount of gain outperform those "bargain yagis"?) The main angle of radiation is vertical – very important for DX work. The directivity is bidirectional, in two directions. As an added attraction, the beam heading can be changed by 90°. This is done by phasing cables, but more on that later.

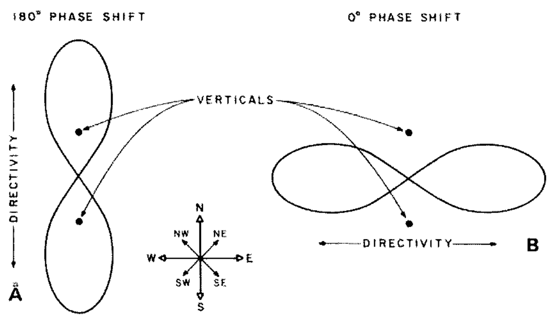

Fig. 1.

The Theory Behind the Antenna

As the name suggests, the phased verticals system utilizes two identical vertical radiators, which are either out of phase by 180°, thus producing the radiation pattern shown in Fig. 1(a), or are exactly in phase, producing the radiation pattern shown in Fig. 1(b). It can be said that the antenna can beam in four directions. For example, in Fig. 1(a), the verticals are lined up with the north, so you have the beam headings N/S. You can also select the pattern shown in Fig. 1(b), E/W.

The Coaxial Harnesses

1. See Fig. 2(a). The 180° phasing section of coax (piece of coax which creates the phase shift between the two verticals) is connected between each vertical. The length is ½λ on the operating frequency* for a phase shift of 180°. Another piece, any length, is connected to either vertical and run into the shack.

2. See Fig. 2(b). The phasing section of coax is connected between each vertical, as before, but the length is now 1λ on the operating frequency.* This will provide a phase shift of 0°, or, in other words, the verticals will be in phase.

3. For more elaborate systems, run two lines of coax, equal in length, from each vertical to the shack. Then you may either add a ½λ * piece of coax in one line, as in Fig. 3(a), for a 180° phase shift, or add nothing and connect the two lines then and there, for a phase shift of 0°, as in Fig. 3(b). The advantages of this system are that you may select the phase shift between the verticals and, therefore, the beam heading from the convenience of the operating position.

Erection of the Antenna

Any vertical antenna system should be used against a good ground system. The easiest way to achieve a ground system on a roof is to lay a system of radials (wires running out from the base of the antenna on the roof). For this antenna, the length of the radiators should be 17' 7" for best performance at 14.2 MHz. The antenna will operate both ends of the 20 meter band with the 17' 7" radials. Anywhere from 4 radials to 120 and up are acceptable. The antennas at LAØBP each have 7 radials. (The performance is quite good.) The radials should be laid out with the same angle between them (i.e., for 4 radials, the angle between should be 90°, for 6 radials the angle should be 360/6 = 60°, etc.). This is

*Keep the velocity factor in mind when cutting for RG-58/U or RG-8/U.

just a recommendation, and, if it is impractical to follow, it can be disregarded. Since each radial is 17' 7" and the antennas are spaced at about five meters, the possibility of 2 radials overlapping (one from each vertical) is good. If this is the case, by all means splice the two together. This should increase the size of the ground system for both verticals.

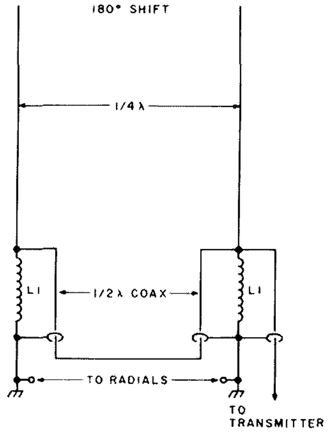

Fig. 2(a).

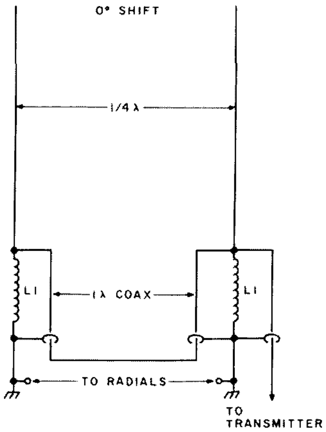

Fig. 2(b).

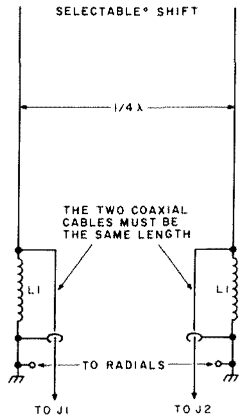

Fig. 2(c).

Construction

When getting together the materials for this project, I was careful to use very easily obtainable materials. I think I achieved this goal with some to spare.

The two verticals are identical in every respect. The vertical radiators are mounted on base boards, each board a four-foot 2" x 3". The "pipe" is fastened to the boards by cable straps spaced every six inches for three feet. (Heavy-duty brads are a good substitute for the cable straps.)

Now that each radiator is mounted on its own board, the next step is to mount all the other components wherever there is room. The coil should be mounted as close to the bottom of the radiator as possible, and an eyebolt (woodscrew type) should be placed six inches below the coil. At the bottom of the radiator, there should be a low-resistance clamp. A possibility is to use a properly sized hose clamp.

The next step is to solder one end of the coil to the radiator. Now the verticals are ready for mounting.

When mounting this system, the general rule of "the higher the better" applies. But if the optimum condition of a small, flat area of a roof is not obtainable, the system is perfectly at home on the ground. Give it a try!

The most important factor to keep in mind when selecting a place to mount is to keep the verticals ¼λ apart. Try to keep this as close to ¼λ as practical. Again, if ¼λ is not practicable, give whatever is practical a try!

Coaxial Wiring

The actual coaxial wiring should be delayed until the verticals are in their permanent berth. Then the line from the system (either vertical) to the shack can be custom cut. To be sure of accuracy, have the phasing section precut before you go up on the roof. Sometimes you don't get an accurate length when you are worrying about falling. If you want to be sure, cut the phasing section inside.

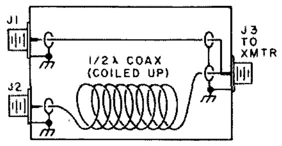

Fig. 3(a).

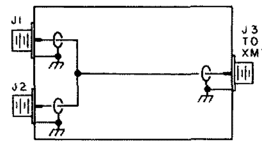

Fig. 3(b).

Since the center of the coaxial cable is directly connected to the coil, the coax should be tacked down to the baseboard to lessen the strain on the coax-to-coil connection. Don't forget to connect the coaxial shields to the remaining side of the coil along with the radials!

Conclusion

After four months of use at LAØBP, we found a 10 dB improvement in signal strength over the dipole. Also, with the beam lobes pointing at E/NE and S/SW, many Japanese stations have been worked along with VS6s and VKs. ■

Parts List

2	four-foot lengths of 2" x 3" stock or equivalent
24	heavy-duty cable straps or brads
2	five-meter pipes, ¼" in diameter or larger (aluminum, steel, or copper)
2	coil forms, 1" in diameter (6-1/3 turns, 6 turns per inch) (L1)
2	woodscrew eyebolts
1	approximately 120' of #20 or larger wire (radials)
1	required length of RG-58/U or RG-8/U

LETTERS

Continued on page 79

of money. One good way is to stick to CW... some of the top certificate hunters and QSL nuts are running relatively low power and making out just fine. Until such time as manufacturers are able to make enough expensive equipment to saturate the demand, I suspect they will continue to concentrate on it. On the other hand, with it being so simple to make extra money, a fair percentage of the hams are able to buy just about anything they really want. Our recent reader poll showed that the average 73 reader spent almost $1,000 last year on ham gear... and that's an average! Perhaps I should write more about ways to use your ham smarts to make money... other than writing articles for 73.—Wayne.

CREDIT WHERE DUE

Many high schools in the country have amateur radio clubs as extracurricular activities, and many of these clubs offer code and theory classes to their members. Beginning in September of 1978, we at Cedar Cliff High School in Camp Hill, Pennsylvania, will be trying something which may be of interest to you and any teachers who are also hams.

A few months ago, Tom Rutland K3IPW and I came up with the idea that amateur radio need not be restricted to the ranks of extracurricular activities. It is a known fact that many people end up in certain vocations due to their involvement with amateur radio. We used this fact to propose that a

Continued on page 85

Karl T. Thurber, Jr. W8FX/4
233 Newcastle Lane
Montgomery AL 36117

Modernize the Matchbox!

—increased capability for a classic coupler

Certain pieces of ham gear simply never become outdated, becoming classics in their own right. They are items which it is wise to keep for their all-round utilitarian value. One of these is the Johnson Viking Matchbox.

The Matchbox series of antenna couplers was introduced in the mid-fifties to match practically any antenna impedance and line configuration (open wire, coax, or single wire) to a 50- to 75-Ohm transmitter and receiver. The 275-Watt and 1-kW models were produced, both with and without swr indicators. (Very similar units are available today from Nye Viking.) The Matchbox is a real gem, being capable of matching balanced lines of 50 to 1200 Ohms and unbalanced loads of 50 to 2000 Ohms, with an ability to tune out large amounts of reactance, the amount depending upon the line or antenna resistance and frequency.

Dating from my Novice days in 1955, I had an old, beat-up 275-Watt box (with swr bridge) which had seen much, much hard service and was in definite need of renovation. The first step in rehabilitating the unit was to clean up the cabinet interior and exterior (who needs a maroon cabinet?), remove all hardware, and carefully spray the cabinet with a dull-gloss gray enamel. The meter in my unit had seen better days, so I replaced it with a high-quality 100 uA meter obtained from a local surplus house for less than $4.

I also have a Tempo 2020 transceiver in use, meaning that the receive-transmit switching feature of the Matchbox is not required. Therefore, 115 V ac is continuously applied to the Matchbox T/R relay, whenever station power is applied, to lock the unit in the trans-

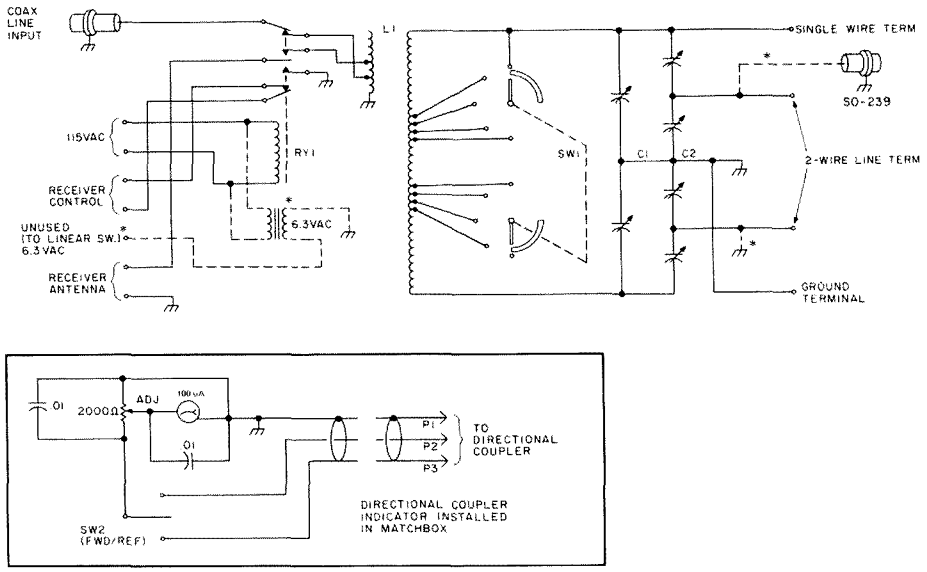

*Fig. 1. Matchbox showing added components. Relay, RY1, shown in the transmit position; Bandswitch, SW1, shown in 80 meter position. *Coax output, additional 6.3 V ac transformer added.*

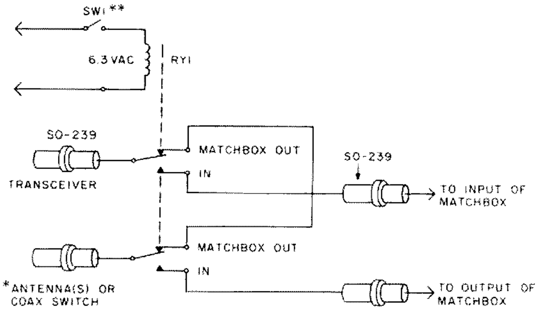

*Fig. 2. P & H Model AR-1 linear switch. *2- or 3-position coax switch may be installed to allow antenna or antenna/dummy load selection. **Allows selection of straight-through operation or routing antenna/dummy load through Matchbox coupler. (SW1 is an internal part of the P & H switch and is front-panel mounted.)*

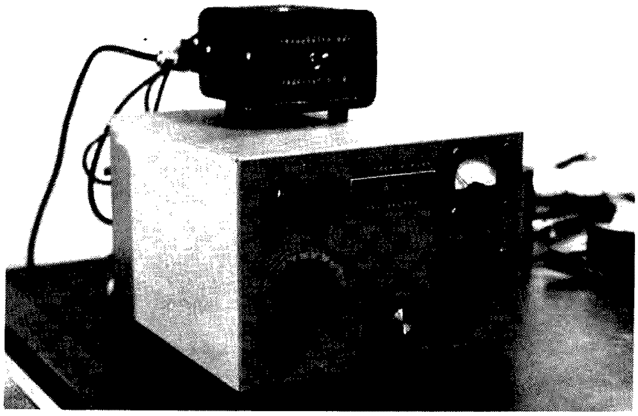

mit mode. This also provides a source of 115 V ac inside the Matchbox for another purpose – see Fig. 1.

I have long possessed another classic, an old P & H Model AR-1 linear amplifier in/out switch, a handy little coax-switching box containing a 6.3 V ac relay. It is designed to provide selection of linear amplifier/"straight-through barefoot" operation. The unit can be provided with 6.3 V ac power from a small filament-type transformer mounted inside the Matchbox, receiving its power from the 115 V ac going to the T/R relay. The P & H unit is mounted atop the Matchbox and is used to provide tuner "in" and "out" switching. A coax switch, mounted at the antenna input coax connector of the P & H switch, allows switching of multiple antennas and/or a dummy load, either directly to the transceiver or through the Matchbox. Fig. 2 shows the diagram of the P & H linear switch.

If such a handy gadget as the P & H AR-1 unit is not available, there is sufficient room inside the Matchbox to install a DPDT ceramic transmitting-type rf switch to perform the Matchbox in/out switching. This would eliminate the need for the 6.3 V ac transformer which powers the P & H switch. A 2- or 3-position rotary rf switch can also be installed to select between antennas and/or a dummy load, if there is no objection to drilling the panels to install the rotary switches and additional coaxial connectors. (If the remote directional coupler is bolted onto the rear apron, blocking much of the rear panel space, the rotary selector switches would have to be mounted on the front or side panels.)

Fig. 3 shows the overall station rf wiring at my installation.

The resultant combination is rather satisfying and very versatile and is quite similar to the features of the Drake MN-4 Tuner, but with wide-range impedance matching capabilities. ■

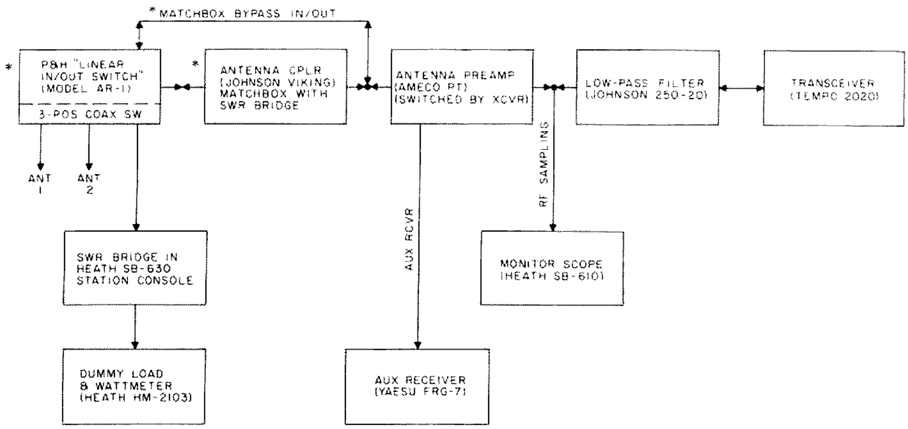

*Fig. 3. Author's rf station wiring. *See text for details.*

LETTERS

from page 83

new course be offered in our school's curriculum and, for the first time during the 1978-79 school year, we will offer a course entitled "Amateur Radio."

The course will meet for two class periods per week (47-minute periods) and will run for the entire school year. All students completing it successfully will receive 2/5 credit toward their graduation requirements. (A class meeting 5 periods per week for the entire year is worth 1 credit toward graduation.) All students will be given the Novice exam at the end of the first semester and, hopefully, many will progress to the Technician or General licenses by the end of the second semester.

We have budgeted for and expect to be using Heath equipment and the *73* code tapes and study guides.

Anyone wishing information on the structure of the course and our results with it can contact me at the school.

Fred D. Smith, Jr. K3MOA
Camp Hill PA

PERCENTAGE PLAY

In your March, 1978, editorial, you ask why hams feel a responsibility to get involved in cleaning up CB while we show no interest in CAP or the police frequencies. In the recent ARRL survey, half of all hams responding indicated that they are also CBers. I'm sure your 73 poll is producing similar results. I am confident that a similar survey would show that the number of hams who are policemen or CAP members is tiny by compar-

Continued on page 87

Donald A. Chappell W2AZD
48 Winnie Lane
Poughkeepsie NY 12603

The Miserly Magnetic Antenna

—make this sausage-can magnetic mount

Do you recognize one of these problems?

You just got a new 2 meter rig or finished building that Hot Water 202 and are anxious to go mobile. You're going mobile with that handie-talkie and want something better than the rubber ducky. Your rig is normally in a second car, but you're going on vacation in the family car and are looking for a temporary 2m antenna to work those repeaters across country. Perhaps your problem is the need for a mobile antenna until you can make up your mind whether it's going to be a 5/8λ or a collinear and where to mount it. Maybe you just don't want to drill holes in your car.

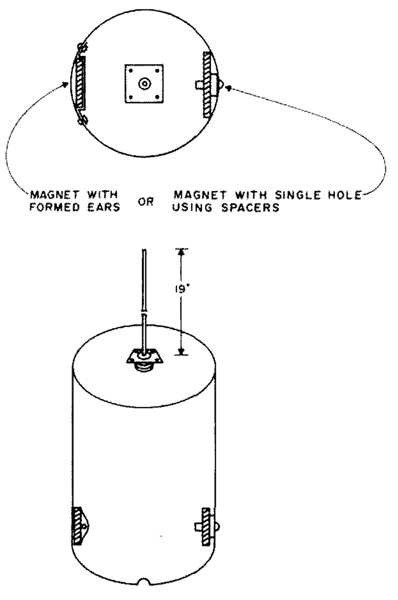

Fig. 1. Sausage-can antenna.

Whatever the problem, the solution could be the sausage-can antenna for 2 meters.

As a 1/4λ vertical groundplane antenna, it performs well. The swr will be acceptable from 146 to 148 MHz utilizing the instructions following, and, with a little cut and try, it can be reduced to 1.1:1. This is a construction project. The design is very basic and can be verified using an antenna book.

So often, it seems, construction projects make statements about costs in relation to what's in your junk box. Now, no two junk boxes are the same, and some hams lack the experience or knowledge to substitute. The building of the sausage-can antenna will only cost a couple of dollars even if you must buy all the materials.

Obtain the following:

one 5 oz. aluminum can of Armour Vienna Sausage from the supermarket;
two cabinet door magnetic latches from the hardware store;
one coaxial connector, chassis type, SO-239 from Radio Shack;
one 19-inch piece of music (piano) wire from a hobby shop, or one 19-inch piece of brass welding rod from an auto supply or repair shop;
screws and nuts and/or aluminum pop rivets, as required, from the hardware store;
spacers (if needed) from the hardware store.

Open the can of sausage, discard the lid, and eat the sausage (it's about time for a cold beer, also). Wash and dry the can. Drill a 3/4-inch hole in the center of the bottom of the can to accommodate the SO-239 connector.

Temporarily insert the threaded end of the connector into the can from the outside. Using the connector as a template, center punch the four connector mounting holes. Set aside the connector and drill the four 1/8-inch holes which you just marked in the can.

If your magnetic latches have mounting ears, bend the ears to conform to the inside of the can. For latches with a single mounting hole in the center, a couple of spacers will be required between the latch and the can to prevent distorting the shape of the can.

Magnetically attach the two latches to a narrow iron straightedge at approximately the distance apart equal to the inside diameter of the can. Lower the latches into the can with the straightedge resting across the rim. Adjust the latches so that the flat sides of the latches touch the inside wall of the can 180 degrees apart. Using an ice pick, mark the center of the latch-mounting holes with sufficient pressure so that you can see the marks from the outside of the can. Now, from the outside of the can, center punch and drill holes for the screws or pop rivets to be used in mounting the

magnetic latches.

Next, file or cut away the rim on one side of the can halfway between the two magnets to allow the can to be set down on a flat surface with the coax in place.

You are ready for assembly.

Insert the threaded end of the SO-239 connector into the can from the outside and pop rivet or screw it into place. (Aluminum pop rivets won't rust. If screws and nuts are used, get nonferrous types.) Then fasten the magnetic latches on the inside with screws and nuts or rivets from the outside, again using your iron straightedge for correct positioning. Solder the music wire (a small brass welding rod won't rust) to the center lug of the SO-239 connector.

If music wire or other ferrous material is used, spray the wire after soldering with clear or nonmetallic paint.

Connect your coax to the connector inside the can using a PL-259 connector. Place the sausage-can antenna on top of the car, and run the coax through a window or fly to the 2m transceiver. When the radio is not in the car or, more importantly, when the car is parked, toss the antenna inside.

The sausage-can antenna has been made and used by a number of hams in my area with good success. The aluminum can does not rust, is lightweight, offers little wind resistance, and is easy to work with using the simplest of tools. The magnetic latches hold well on a variety of cars, from VWs bouncing across country to a wooded field day site to a full-size car at top highway speeds. This antenna has also been effectively used on a car with a vinyl top by mounting it on the trunk deck just behind the rear window.

For an easy one-evening project that will perform very satisfactorily, build a sausage-can antenna. ■

LETTERS

from page 85

ison.

In the same issue, WDØAUU suggests 10-Watt 10 meter voice privileges for Novices. To WDØAUU and others who may not be familiar with mail-order voice privileges, I recommend the September, 1976, editorial in *73*. The fact that 90% of all Conditionals called up for examination could not pass the General test should prove the incentive value of mail-order voice privileges. As for the 10-Watt power limit, a quick scan across 11 meters should demonstrate the FCC's ability to enforce power limits.

Robert A. Wiley WD9FQD
Peoria IL

The fact that 50% of ARRL members are CBers is no real surprise. The poll of 73 readers shows that about 10% are CBers. My call for hands at hamfest talks also shows that about 10% of the active hams are involved with CB. I did not believe the "fact" that 90% of the Conditionals called up for examination could not pass the General. I do believe that a lot of Conditionals . . . as well as most other hams . . . would have a difficult time passing the ham exams without going back and studying the material again. Much of that stuff just isn't used in everyday hamming, so we all tend to forget it. That's human nature and not worth a put-down.—Wayne.

GETTING OK

I have been an amateur since 1934; my WAS was issued in 1950. Nevertheless, I like to contact different US stations on CW—especially young peo-

Continued on page 90

Carl H. Crumley N4VD
512 North Harrison Avenue
Cary NC 27511

The 75m DX Chaser Antenna

—5/8λ works on 75m as well as 2m

Recently, I constructed a 1/4-wave vertical wire antenna for 75 meter DX work. The antenna worked fairly well, compared to my inverted vee at 50 feet, occasionally outperforming it on DX and generally falling far short on close stations (as would be expected).

My original 1/4-wave had 12 ground radials 60 feet long under it, as well as two ground rods separated by 40 feet and connected with a buried wire. I thought my ground-radial system was working well as a ground plane for the vertical radiator (a 61-foot wire suspended from a rope that hangs between two enormous pine trees).

On-the-air discussions of my antenna with 75 meter DX enthusiasts brought several snickers about my poor ground. It seems that serious 75 meter vertical users believe in well over 30 radials to lower the ground connection losses. One individual even startled me by saying that, even with 30 radials, I would have over 25 percent signal loss to the ground system.

Having already dulled one ax head down to a nub burying only 12 radials, I started searching for an easier way out to improve its performance. Digging around in old antenna books (the kind that talk about rhombics, windoms, and Zepps) turned up some interesting facts that led to what I have up in the trees now—a 5/8-wave top-loaded vertical.

Theory

The 1/2-wave dipole antenna carries maximum current at the center insulator if it is centerfed. The center is the minimum voltage point, which is why you can use practically anything for a center insulator. A 1/4-wave vertical is just half of a dipole, with the ground plane making up the missing half. Where current flow is highest in a wire antenna, maximum radiation occurs. Just as the center of a dipole does the most radiating, so does the bottom portion of a 1/4-wave vertical do the

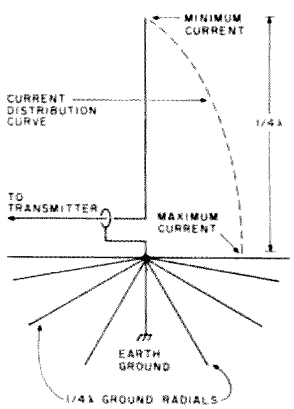

Fig. 1.

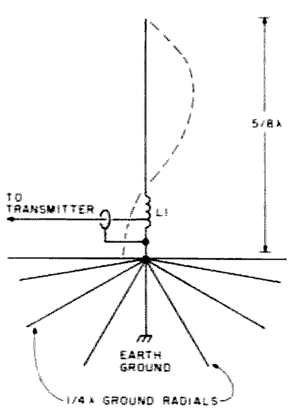

Fig. 2.

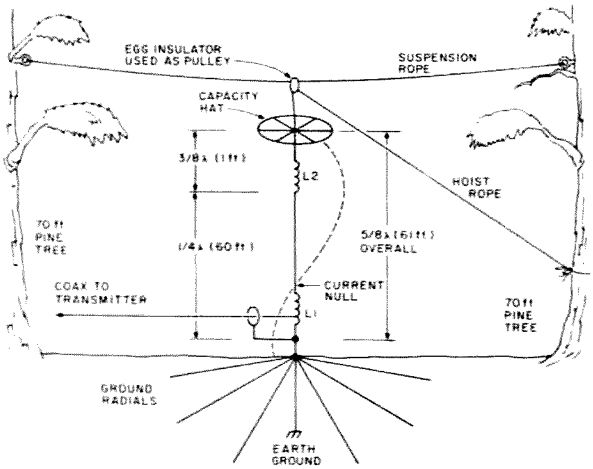

Fig. 3.

most radiating.

All that leads to the fact that the bottom of my vertical was doing most of the work down where ground losses were the highest. See Fig. 1. The idea, therefore, was to get the high current flowing at a point up higher in the wire, as in Fig. 2. That would make the radiating part of the wire further from ground and therefore reduce ground losses. This is an age-old idea hams have been using for years with 160 meter antennas where is is practically impossible to get a full-size vertical in the air.

Electrically lengthening low-frequency vertical wires is usually accomplished by the old "capacity-hat" and loading-coil method. Articles on this method tell you to stick the mess on top of a wire, and it becomes longer than a 1/4 wavelength and more efficient for the previously mentioned reasons. But how long is it and does it really matter?

I hated to just randomly toss up some top loading and hope that it was an improvement. Feeling a specific length would be preferable, I settled on 5/8-wave electrical length, since it would theoretically give some gain. My research turned up the fact that a 5/8-wave vertical is actually half of a "double-extended Zepp" (remember that antenna?) operated against ground.

Since no one can give you exact values for loading a shortened wire in any given situation, the following ideas show how I arrived at the values for my antenna. I feel confident that the mess in my backyard is a 5/8-wave vertical. My method doesn't require any sophisticated instruments, only an swr bridge and a cheap grid-dip meter.

A 1/4-wave grounded vertical is resonant (has a low impedance feedpoint). Therefore, a grid-dip meter will show a dip at the resonant frequency if the coax is removed and the antenna temporarily attached to the ground system. Sure enough, my grid-dip meter said that my vertical was resonant at 3.8 MHz. A little one-turn loop was twisted into the vertical wire in order to get sufficient coupling for the grid-dip meter.

I lowered the wire and placed a "capacity hat" (see Fig. 5) on top and hoisted it back up. Now my grid-dip meter said my vertical was resonant at 2.8 MHz. With success just around the corner, I then placed an inductance (see Fig. 3) between the wire and the capacity hat. Suddenly, I could not find the resonant point. I figured it had gone out of the low-end range of the meter (1.9 MHz). But I did find a dip at 5.4 MHz, which turned out to be the 3/4-wave point. Multiples of 1/4-wavelength vertical are resonant also, so, from this point on, I relied on the 3/4-wave dip to make my adjustments.

Parts List

L 1 12 turns no. 14 solid copper wound on 2½-inch form. Tapped 4 turns from bottom for coax feedline. Space wound to allow moving tap for minimum swr.

L 2 35 turns no. 14 solid copper wound on 4½-inch form. Space wound over entire length. A Tupperware™ juice container is satisfactory for form.

C 1 (if needed) 365 pF per section broadcast-type variable. All sections may need to be paralleled for maximum capacitance if resonance is not obtained with 1 or 2 sections.

C 2 (if needed) 10 pF to 250 pF wide-spaced variable.

Ground radials

Each radial approximately 60 feet long, buried about 1 inch underground in a furrow cut with an ax. All radials are brought together and soldered to a piece of copper strip. The radials do not necessarily have to be in perfect "spokes-of-a-wheel" configuration, but may be bent to fit available space.

A few more turns of wire added to the inductor and I had a good 3/4-wave resonant dip at 4.5 MHz. Now I had what I was looking for. If the antenna was 3/4 wavelengths long at 4.5 MHz, then, by applying the usual formulas, I found my antenna was 1/4-wavelength long at 1.5 MHz and 5/8-wavelength long at 3.8 MHz.

Just to test my theory, I ungrounded the antenna and found a dip at 3.0 MHz. That would be the 1/2-wave point, and, since ungrounded half-waves are resonant (dipoles, if you please), I had done everything correctly up to this point.

A 5/8-wave vertical being nonresonant (not presenting a low-impedance feedpoint), I had to put a little matching coil at the bottom and tap up the coil to get a suitable swr. My final results showed an swr of 1.4:1 at 3.8 MHz. (See Fig. 4.)

In some cases, it may be necessary to put a variable capacitor in parallel with the base coil and possibly even another in series with the center of the coax line. (See Fig. 4.)

Results

This was definitely the way to go! The antenna now should exhibit a little gain over the original 1/4-wave vertical. More importantly, the radiating part of the wire (the portion with the most current flowing in it) is up around the top instead of down on the ground. This makes the ground system not as important as when the current is near the bottom. There's no need to dig yourself to death burying

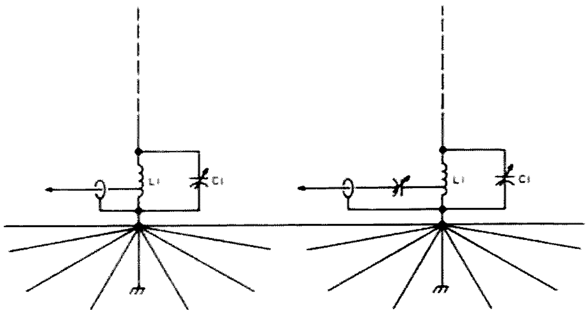

Fig. 4. Alternate feeding methods.

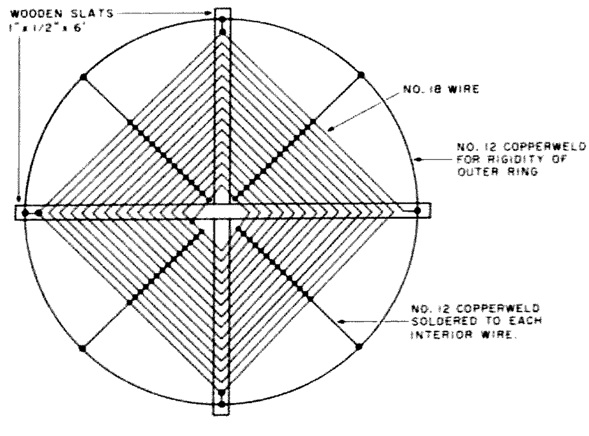

Fig. 5. Capacity hat. Tacks placed on wooden cross-members act as points to wind wire. Connect wire to loading (which hangs under capacity hat) near the center.

wire all around the yard and offending your dog.

Let me emphasize that I still believe that the ground system must be good for any vertical to be a good low-angle radiator. The radials should be no shorter than 1/4 wavelength. No 4-foot ground rods or cold-water pipes for this antenna, please!

An unexpected advantage is that the 5/8-wave isn't as prone to noise pickup as a 1/4-wave, since the 5/8-wave is physically grounded. The lower atmospheric noise level makes copy a lot easier on weak signals.

There's one minor disadvantage – it is fairly narrow on frequency bandwidth. My usable range of frequencies is only from 3.75 to 3.85 MHz. However, this is where all the SSB DX is located, so who cares?

I have also found that this antenna works better than the old antenna when it comes to working nearby stations that are using antennas which transmit in the horizontal plane. Evidently, the capacity hat and loading coil have some pickup horizontally and help make this an all-around better choice than the 1/4-wave vertical.

The same principles can be applied to make a high-efficiency vertical for any LF band. Even on 160 meters, it would not be difficult to get enough loading to make it a 5/8-wave at 1.8 MHz. From my figures, you can see it didn't take much work to get an electrical 1/4-wave at 1.8 MHz while I was working my way down to a 1/4-wave at 1.5 MHz (which is what my 5/8-wave really is).

First on-the-air test on 75 meter SSB yielded a 5 by 8 plus 5 over S-9 report from G3KFT, and DJ6TK broke in to say I was 5 by 9.

Eureka, it works! ■

LETTERS

from page 87

pie who are grateful for the QSO. They often send a letter with their card, and are always asking for mine. Sometimes it is their first overseas or first OK contact.

I know most of them are beginners who are working 21100-21150 kHz. Their way of calling CQ is usually quite wrong, and we lose much time waiting for them. It seems like an eternity when you hear CQ or CQ DX 20 times or more and then a callsign twice at the end. When there is QRM—and there always is—we miss their call very easily.

So, please, a reminder to our young American friends: CQ (three times) de W... (also 3 times) or CQ (three times) DX de W..., etc., for two minutes is enough—when you don't do so, you lose many DX contacts.

Vlada Lausman OK2PDD
Brno, Czechoslovakia

ATTENTION, ANITA!

I would like to increase the membership of the newly-formed 40m gay CW net. We already have 58 members. Gay CW ops, please write for info.

Don Richman AA6GA
PO Box 384
Belmont CA 94002

PLAYING GAMES

I am writing to comment on Mark Herro's neat computer game, "The Klingons Are Coming!" (Apr., '78). To run this program on the TRS-80, a few small modifications are necessary: Line 210 LET Y =

Continued on page 94

Gary Toncre WA4FYZ
13764 S.W. 54th Lane
Miami FL 33175

The Invisible Allband Antenna

—works DX, too

The townhouse is fast becoming a new style of housing in south Florida and in California. The young ham living with his family or just out on his own may think twice about living in a townhouse because of the antenna problem, wondering how he can fit a decent system into a backyard that may only be 18' x 35', like mine. Worse yet, what can you do when the townhouse association says no to any type of outdoor antennas? In my case, the restriction included TV antennas, which have to be installed in the attic. TVI, anyone?

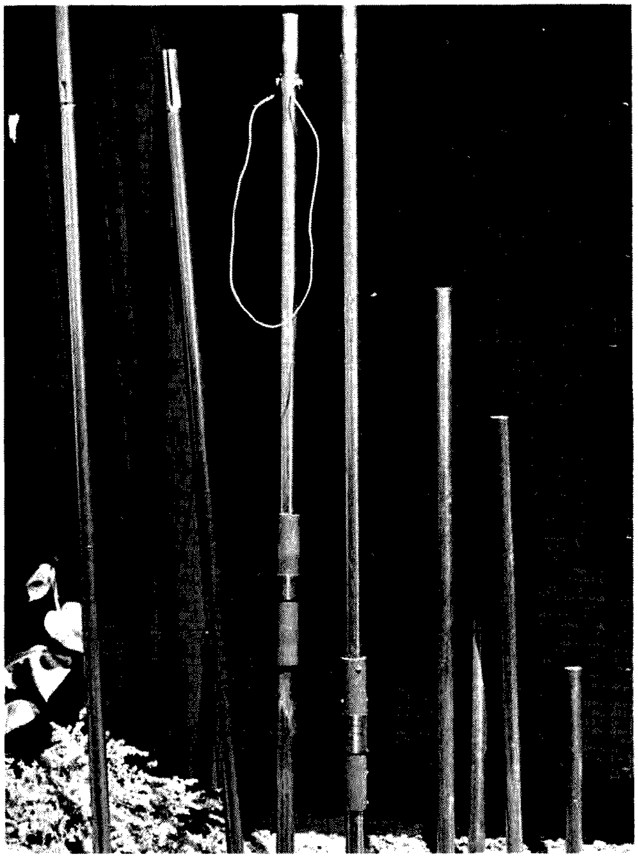

Antenna in its disassembled form showing resonating sections for the different bands. The two sections with the traps fit together for operation on 80, 40, and 15 without changing sections.

When I lived in a house, I used dipoles strung about 10 feet off the roof, about 30 feet above the ground. I found two characteristics of the dipole to be true: 1) I could work only half the stations I heard, and 2) I couldn't hear much of anything, especially DX. This held true for my 15 meter inverted vee as well as the 20 meter dipole. After four years with dipoles, I was ready to try something new.

The Antenna

I found the answer in a catalog from Antenna Supermarket (PO Box 1682, Largo FL). After looking through their catalog, I decided on the Model ABC-1 allband vertical. Here was an antenna with no traps being used on 10, 15, or 20 that would stand no higher than 5 feet unassembled. The backyard fence is 6 feet high, so in unassembled form, it can't be seen!

What good is an unassembled antenna? Well, the beauty of this vertical is its construction. It is made simply of pull-apart TV mast. After the first 5-foot section is mounted on the base plate, the sections are slipped on the mounted mast. For 10, 15, and 20 meters, no traps are used; the sections form a full-size vertical on each band. The disadvantage is the need to go outside to the antenna and switch sections when changing bands. This is only a two-minute job, with the result that the antenna can easily be taken down when not in use.

The antenna's maximum height is 20 feet. This means that on 80 and 40 meters, traps are used to resonate the antenna. There is a resonating coil that can be adjusted by hand – straight out for 40 CW or down for 40 SSB. On 80 meters, short sections of mast are slipped on the top for any chosen segment of the band. Antenna Supermarket includes enough mast to cut two sections for any two segments of 80 meters between 3.5 MHz and 4.0 MHz. You can, of course, buy extra sections of mast and cut them so that you can cover the entire 80 meter band. The bandwidth on 80 is around 100 kHz and, on 40, 125 kHz for 2:1 swr points. Swr on 20, 15, and 10 meters never rises above 1.4:1. The rather noticeable sections that make the antenna resonate on 40 and 80 meters aren't seen because I only operate those bands at night. When the antenna is set for operation on 40 and 80 meters, it will also operate 15 meters without any section switching.

The Ground

The ground for a vertical is very important. In an

article in the December, 1976, *QST*, author Stanley describes the amount of loss of radiation versus the number of radials.[1] The important point of the article is that a ground-mounted vertical doesn't require resonant radials. In fact, it would be better to put down 50 feet of wire in the form of five 10-foot radials rather than two 25-foot radials. The idea is to make the ground underneath the vertical as conductive as possible. The radiation efficiency for the number of radials versus the length of radials is given in the article.

Here's the shocker: I don't use radials at all. In my backyard, planting radials would be difficult at best – the ground becomes solid coral rock only 6 inches down. Since the idea is to make the ground as conductive as possible below the antenna, I decided to lay a piece of metal below the antenna. I went to the local hardware store and bought 3 square feet of plasterer's metal lath – a tightly-woven sheet of metal. It isn't a solid sheet, but it isn't as open as chicken wire. Placed directly below the antenna, it makes a dandy ground. Since we were ripping up the grass in the backyard and replacing it with stone, it was easy to dig down a few inches and lay the sheet down and cover it up.

If ripping up a 3-foot square piece of your backyard doesn't appeal to you, you can use radials. Just try to get a good density of wire below the antenna. Don't lay them all in one direction, either, unless you aren't interested in omnidirectional coverage.

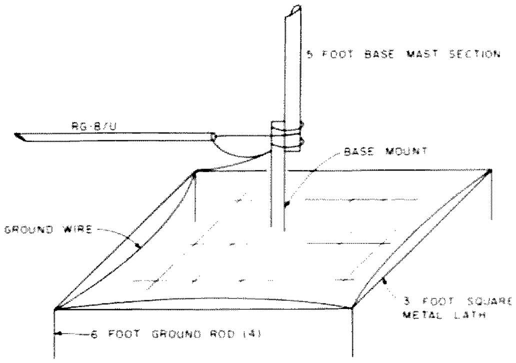

Fig. 1.

Fig. 1 shows the rest of the installation. The mount for the antenna is centered over the buried metal and hammered down into the ground and the metal lath. Four 6-foot ground rods surround the base and are hammered inside the corners of the lath. They are connected to the base with aluminum ground wire to the point where the braid of the coax is connected.

Some Tips and Construction Notes

Before you try slipping the sections together, sand them down so that they will slip together easily. You will be happy in the middle of some contest that you did.

Decide on what segments of 80 meters you want to operate. Cut the mast to the lengths required, as noted in the instructions that come with the antenna. Sand these sections where they join, too.

I would recommend

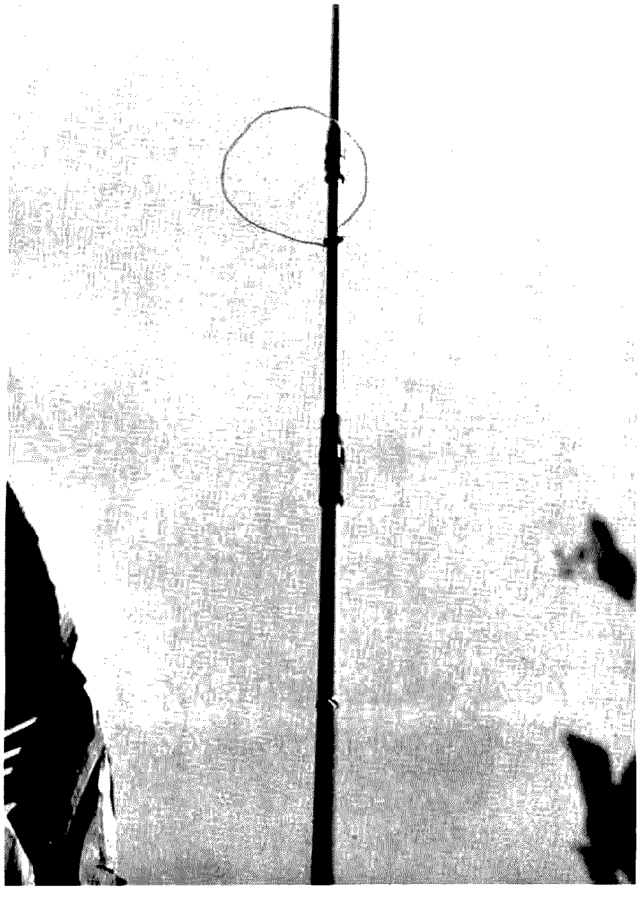

Vertical assembled for use on 20 meters. Operation before and after growth of the plants showed no noticeable difference in swr or effective radiation. Note that no traps are used on this band.

Top of vertical set for operation on 40 and 80 CW.

etching all of the resonating sections with a diamond-tipped pencil or an ice pick. You don't want to be measuring sections and looking them up in the instructions in the middle of the contest, either.

The base mast section mounts to the base using two U-bolts. This is nice when you want to totally disassemble the antenna. I used this vertical at field day last June, and it took just 5 minutes to loosen the U-bolts and pack them with the masts.

I feed the vertical with RG-8/U coax.

Performance

The general idea is that verticals "radiate equally poorly in all directions." I don't find this to be true. Unlike my dipoles, I can now work almost anything I hear, including most of the pileups on 20 SSB.

Another result of using a vertical is the lack of QRM from the local boys on 10 meters due to cross-polarization. This amounts to a difference of 7 or 8 S-units as measured at K4HYE, some 10 miles east of me. Believe me, after living in front of some of the guys running a kilowatt and a beam pointed at me, it's nice to be able to hear something else on the band!

Operating 80 meters can be tricky at times. Unless you used a lot of radials or a bigger lath, don't expect to compete with those with full-size antennas.

Plenty of DX is worked here. Europe, Africa, and South America are very strong on this antenna. Unlike my dipoles, DX stations are usually as strong or stronger than stateside stations.

The combination of easy breakdown and efficiency has made this system work for me. The system might just work out for you. Try it, and let me know the results.■

LETTERS

from page 90

INT (A*RND(1)) must be changed to 210 LET Y = INT(A*RND(0)). The same change must also be applied to lines 220 and 230. If the program is run on a TRS-80 without these changes, the Klingon base will be located at the coordinates of your search area. This is not a criticism of Mark's program, since he addresses this potential problem in this article.

In regard to playing games on computers, I look people right in the eye when they ask why I bought one, and admit that game playing was a major consideration! Keep up the good work, and keep *73* the best ham magazine on the market!

Larry Russo K3TFU
Columbia MD

CHIME POWER

I wish to add a small comment to your article on page 11 of the April issue of *73 Magazine*, concerning the Chroma-Chime.

I have had one of these "Chimes" for several months and like it very much. As you say, it is out of the ordinary. There is only one thing that you did not know and that takes time to find out: The batteries used to power the unit only hold up for a couple of weeks—not months, as stated in the literature.

The operating instructions say not to operate from a power supply. After using up several sets of batteries, I replaced them with a power pack, after putting a regulator on the output of the power supply.

Edward C. Carnes
Deming NM

Who Says Verticals Don't Work?

—the four-band phased-vertical bomber

William C. Purdy W2LFJ
3421 Pleasant Valley Rd.
Syracuse NY 13215

Numerous on-the-air and mail inquiries have prompted me to write this article describing my vertical phased-array antenna system. I make no claims to originality, since the design is standard and encompasses antenna theory which has been around for a very long time.

Some of the array virtues are herewith enumerated:

1. relatively inexpensive to build;
2. respectable forward gain;
3. low-angle radiation;
4. good front-to-back ratio (end fire);
5. inobtrusive;
6. wind- and iceproof;
7. instantaneous change of directivity with no mechanical rotation;
8. cardioid pattern end fire; figure-eight pattern broadside (see Fig. 4);
9. always grounded for lightning protection.

There have been many articles of recent vintage which have expounded on the subject of vertical arrays, and, while they are all excellent reading, the arrays are either expanded to the point where they are expensive to build, or they require more ground space than is generally available to the average ham.

One article* touches

*QST, "Broadband, Steerable Phased Array," Richard C. Fenwick K5RR and R. R. Shell, April, 1977, p. 18.

Photo A.

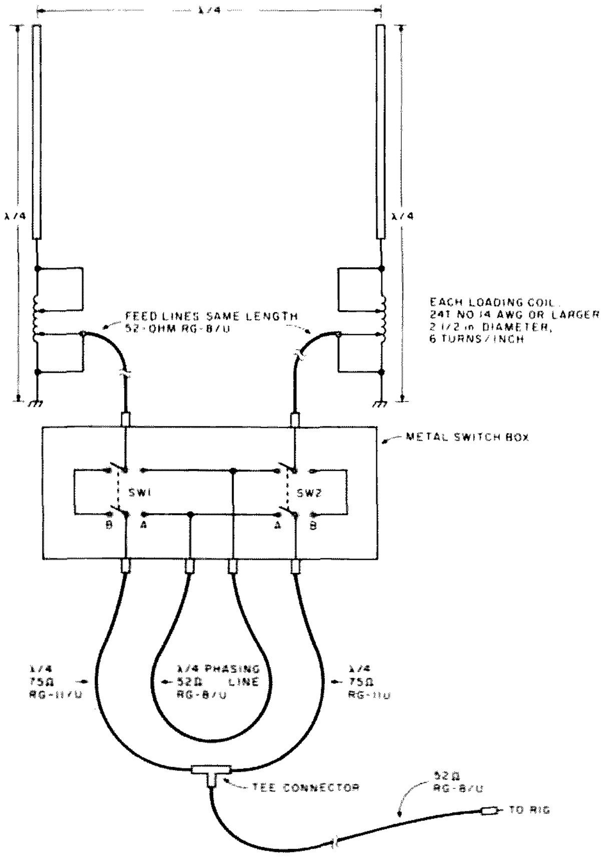

SW1 POSITION	SW2 POSITION	RESULTING DIRECTIVITY
A	B	CARDIOID END-FIRE LEFT
B	A	CARDIOID END-FIRE RIGHT
B	B	BI-DIRECTIONAL BROADSIDE

Fig. 1.

closely on the array to be described. However, it uses two two-element arrays and three ferrite hybrid power dividers and matching transformers. My antenna uses one two-element array, and matching and power dividing are done with coax and a T-connector. The general layout is shown in Fig. 1.

The design of this array was based on peak performance on 40 meters with capability for operating on 15, 20, and 80 meters, as well. The vertical height selected was 30 feet, which precluded 10 meters for low-angle radiation. A loading coil was included at the base to facilitate resonance and matching on all operable bands.

The two verticals are fabricated from hard-drawn copper tubing beginning with 1 inch for the bottom section, 3/4 inch for the middle section, and 1/2 inch for the top. The top is finished with a 1/2-inch copper end cap. Standard reducers are used between sections, and all sections are sweated with solder and a propane torch. The verticals could be made from aluminum tubing or steel TV masting, but copper and solder were preferred for integrity and permanence of the joints, and the cost is not prohibitive. The easy (but more expensive) way out is to use DenTron EX-1 verticals or even trap verticals.

Referring to Photo A, each vertical is strapped to two large standoff insulators which are mounted to an 8-foot 4 x 4 sunk 2 feet into the ground. The bottom of the 4 x 4 is treated with creosote and stabilized with some rocks and half a bag of concrete mix. Some redwood stain makes the 4 x 4 above ground look pretty. The verticals are guyed at the second reducer with three nylon lines spaced 120 degrees on a circle.

The loading coil for each vertical is mounted on standoffs at the base, as shown in Photo B, and is much oversized, but, for 50¢ on the surplus market, who would argue? The coils can be fabricated from B & W coil stock for powers to about 500 Watts. For a kW, the wire size should be #12 AWG or larger.

The 52-Ohm coax to each vertical is terminated in a 2-3/4 x 1-5/8 x 2-1/8-inch minibox, and the center conductor is led to the loading coil through a feedthrough insulator and a short piece of 1/4-inch flat copper braid terminated in an alligator clip. Eventually, I plan to enclose each loading coil in a weatherproof box. While 3 feet of snow didn't seem to bother operation last winter, weatherproofing can't hurt!

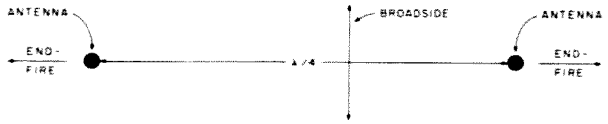

Fig. 2. Bird's-eye view.

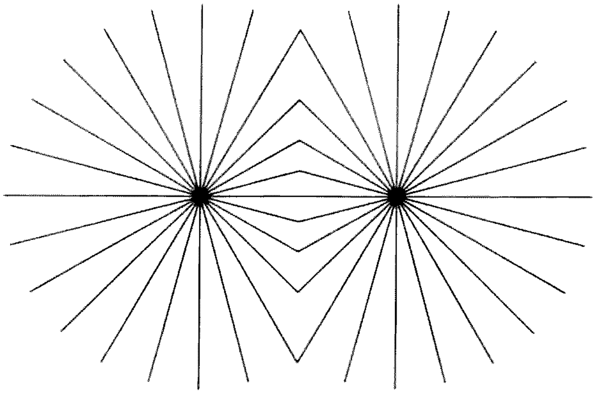
Fig. 3. Radial pattern.

Each antenna is fed with a length of 52-Ohm coax long enough to reach the point where the phase switching will be done. My phasing is done in the basement of my home by relays which are controlled from switches upstairs in the den, so the cables are each 100 feet long. It is important that these 52-Ohm cables are the same length, since no phase shift is desired at this point in the system. The cables are buried underground about 6 inches without protection. Be extremely careful not to puncture the jackets. A safer way would be to thread each cable through a plastic garden hose before burial.

The 52-Ohm cable coming from the T-connector can be any convenient length to reach the operating position. Note in Fig. 1 that the phasing could be done with manual switching at the operating position, if you don't

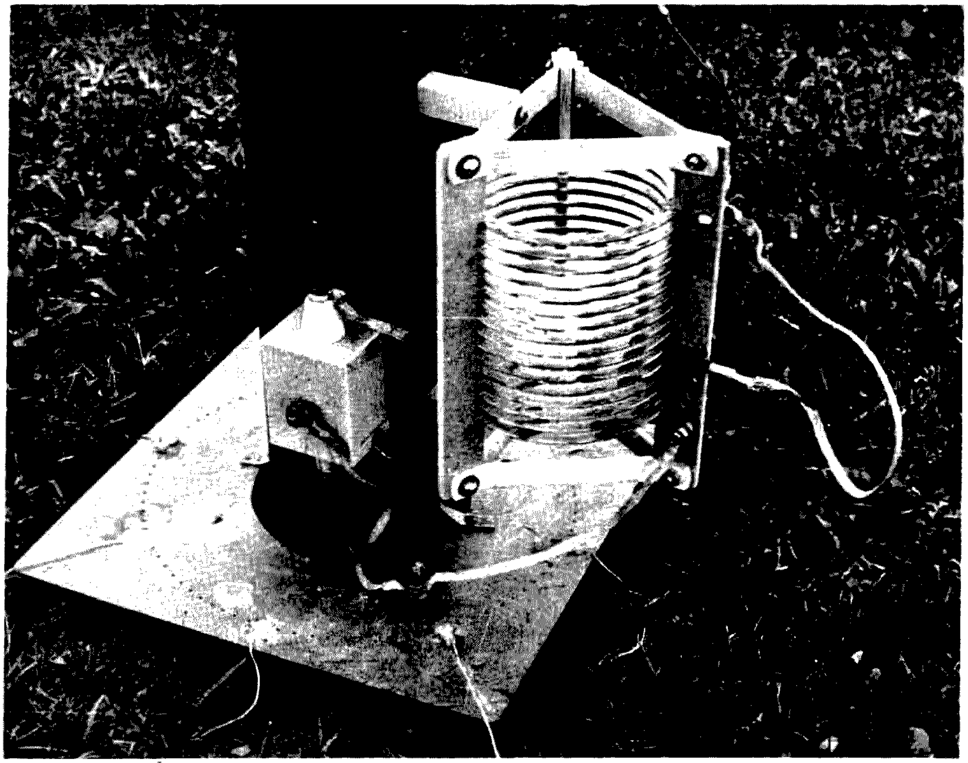
Photo B.

Photo C

mind running two coaxial cables and having a phasing line and two matching lines coiled up in the shack for each band.

The λ/4 phasing and matching lines are calculated from the equation:

$$\lambda/4\ (\text{ft.}) = \frac{246\ (\text{VF})}{f\ (\text{MHz})}$$

where VF is the velocity factor of the coax line and is 0.81 for foam dielectric and 0.66 for standard dielectric. For a frequency of 7.15 MHz and foam dielectric, the calculation is as follows:

$$\lambda/4 = \frac{246\ (0.81)}{7.15\ \text{MHz}} = 27.87\ \text{ft.}$$

The λ/4 lines can be cut to the formula, or, for greater accuracy, the lines can be made slightly too long and then resonated with a dipper to the desired frequency. This is done by terminating one end in a male connector and plugging this into a female connector with a one-turn loop. Loosely couple the dipper to the loop and lop off small lengths of the cable's bitter end until resonance occurs. Then terminate the bitter end in another male connector and the job is completed.

The λ/4 75-Ohm lines and the T-connector comprise a way of matching two antennas to one feedline. Since the T places the two lines in parallel, it is desirable that the output of each line exhibit an impedance of 104 Ohms. The input of each line is 52 Ohms, so you must determine what characteristic impedance is needed in a λ/4 section to realize 52 Ohms at one end and 104 Ohms at the other. Calculate as follows:

$$Z_0 = \sqrt{Z_1 Z_2} = \sqrt{52 \cdot 104} = \sqrt{5408}$$
$$Z_0 = 73.5\ \text{Ohms.}$$

The above equation is nothing more than the geometric mean of the input and output impedances, and the calculation shows that RG-11/U with a characteristic impedance of 75 Ohms is a first-class candidate for the job.

The theoretical gain of the antenna with the cardioid end-fire pattern is about 4 dB and the front-to-back ratio is about 18 dB. The front-to-back ratio proved to be extremely useful on 40 meters when working to the west, by attenuating the European broadcast interference about 3 S-units.

A high-resistance ground can soak up all the power gain, so a good ground system is a must. I use an 8-foot ground rod and 32 λ/4 radials under each vertical soldered to a one-foot square copper plate, as shown in Photo B. Each plate is drilled to accommodate 90 radials, which is about optimum for a good ground. I install radials as the spirit moves me by soldering a λ/4 copper wire into a plate hole and then burying the wire in a slit in the turf made with a lawn-edging tool. This gets the radials out of reach of the lawn mower and doesn't hurt the lawn one bit. Fig. 3 shows the general radial pattern. Where two radials cross, they are soldered together and cut short at the joint. When Photo B was taken, only 8 radials had been installed and the performance was quite acceptable with 180 Watts input.

The horizontal radiation patterns for this array can be found in the *Radio Engineers' Handbook* for various spacings in wavelengths versus phase shift. From these patterns, one can readily determine the necessary phase shift required for operating the array on 20 and 80 meters. (The array can be used as is on 15 meters.) To elaborate on this briefly, I selected a 3λ/8 phasing length for 80 meters to give an end-fire cardioid pattern and a λ/2 phasing length for 20 meters to give a figure-eight pattern end fire. The patterns for 80 and 20 meters with no phasing in either leg are omnidirectional and figure-eight broadside, respectively. In all cases, when shifting bands, the λ/4 matching lines must be changed also.

Tune-up of the array is fairly simple. Resonate each loading coil to the approximate operating frequency with a dip meter by adjusting the coil tap. Then hook an swr meter in series with the coax feeding one of the verticals and tap up the coil a few turns from the ground end with the coax clip lead. Apply some power at the operating frequency through the swr meter and then adjust both coil taps for lowest swr. The adjustments are interrelated, so some juggling is necessary. Repeat for the other vertical.

After each vertical is tuned up, feed the entire array and recheck the swr. If there has been a change, make the adjustments that are necessary to bring the swr in line.

The performance of the phased array is spectacular and is well worth the effort necessary to install it properly. Photo C shows the completed array as installed in my yard. I work anything I can hear on 40 meters, mostly barefoot. Reports are always excellent, including "loudest on the band" or "only W2 heard on the west coast tonight." S9 reports are common in South Africa, New Zealand, Australia, Europe, and all points south. If the QTH were not shielded on the north by a high ridge (which generally precludes Japan, the USSR, India, the Philippines, etc.), I would have three verticals in an equilateral triangle configuration and, driving them two at a time, have a cardioid pattern in six different directions, instantly switchable. Even so, the broadside bidirectional mode (see Fig. 2) performs excellently to the south, and I have no trouble working Central and South America and Antarctica with head-swelling signal reports. ■

John Eaton
1126 N. 2nd
Vincennes IN 47591

Low-Cost Keyboard — II

— software for the April keyboard

This program details the software for a low-cost keyboard ("Now Anyone Can Afford A Keyboard," *73,* April, 1978) that results in a powerful and versatile system. The routines are written comparably to TTY I/O routines that fetch or output one letter at a time with data passed through the accumulator. A graphics section has been added which allows the user to construct graphics characters on screen by individually turning on any or all of the six PolyMorphic graphics blocks.

00-1F	ASCII machine codes (vectors to machine code table)
20-2F	ASCII punctuation
30-3F	ASCII numbers and punctuation
40-5F	ASCII upper case letters and punctuation
60-7F	ASCII lower case letters and punctuation
80-9F	Greek and math symbols
A0-BF	Undefined
C0-FF	Graphics characters

Table 1. Code assignments.

The machine codes (00-1F) have been expanded with the addition of TABULATION, SHIFT LOCK, CLEAR (home cursor), and ESCAPE. Altogether, 9 of the possible 32 codes have been defined. The program is written with all the starting addresses of the routines in a table so that you can easily add routines of your own.

If you have built the hardware shown in the article, then you will be able to use this software with a few changes. You will have to wire in four new switches (TAB, CLEAR, SHIFT LOCK, and GRAPHICS) in order to take advantage of all the features of the complete system.

Description

The software consists of two main subroutines. CHARIN (300A) will scan the keyboard for a single keystroke. Once found, the code will be modified according to the SHIFT and CONTROL keys and the result returned in the accumulator. CHAROT (30C5) will take the code that is in the accumulator and either display it or perform the necessary machine function.

The software is designed to work with a PolyMorphic

Key	IC1	IC2	Code	Shift	Control	Shift and Control
@	0	3	40 @	60 \	00 NUL	80 α
A	1	3	41 A	61 a	01 SOH*	81 β
B	2	3	42 B	62 b	02 STX*	82 χ
C	3	3	43 C	63 c	03 ETX*	83 δ
D	4	3	44 D	64 d	04 EOT*	84 ε
E	5	3	45 E	65 e	05 ENG*	85 ζ
F	6	3	46 F	66 f	06 ACK*	86 γ
G	7	3	47 G	67 g	07 BEL*	87 θ
H	8	3	48 H	68 h	08 BS	88 ι
I	9	3	49 I	69 i	09 HT	89 κ
J	A	3	4A J	6A j	0A LF	8A λ
K	B	3	4B K	6B k	0B VT*	8B μ
L	C	3	4C L	6C l	0C FF*	8C ν
M	D	3	4D M	6D m	0D CR	8D ℰ
N	E	3	4E N	6E n	0E SO*	8E ◊
O	F	3	4F O	6F o	0F SI*	8F π
P	0	2	50 P	70 p	10 DLE*	90 ρ
Q	1	2	51 Q	71 q	11 DC1*	91 σ
R	2	2	52 R	72 r	12 DC2*	92 τ
S	3	2	53 S	73 s	13 DC3*	93 √‾
T	4	2	54 T	74 t	14 DC4*	94 Φ
U	5	2	55 U	75 u	15 NAK*	95 χ
V	6	2	56 V	76 v	16 SYN*	96 φ
W	7	2	57 W	77 w	17 ETB*	97 ω
X	8	2	58 X	78 x	18 CAN	98 ∩
Y	9	2	59 Y	79 y	19 EM*	99 √
Z	A	2	5A Z	7A z	1A SUB	9A →
[{	B	2	5B [	7B {	1B ESC	9B ←
\ ¦	C	2	5C ¥	7C ¦	1C FS*	9C ↑
] }	D	2	5D]	7D }	1D GS*	9D ÷
↑ ~	E	2	5E ↑	7E ~	1E RS	9E ≤
DEL	F	2	5F _	7F ■	1F VS*	9F ≈
0	0	4	30 0	20		
1 !	1	4	31 1	21 !		
2 "	2	4	32 2	22 "		
3 #	3	4	33 3	23 #		
4 $	4	4	34 4	24 $		
5 %	5	4	35 5	25 %		
6 &	6	4	36 6	26 &		
7 '	7	4	37 7	27 '		
8 (	8	4	38 8	28 (		
9)	9	4	39 9	29)		
: *	A	4	3A :	2A *		
; +	B	4	3B ;	2B +		
, <	C	5	2C ,	3C <		
- =	D	5	2D -	3D =		
. >	E	5	2E .	3E >		
/ ?	F	5	2F /	3F ?		

*Table 2(a). ASCII codes and symbols. *Undefined — default to NUL.*

video display board. This is a 64 x 16 display which occupies 1024 bytes of memory (7C00-7FFF).

Both routines use a pointer in memory to keep track of the position of the cursor on the screen. VIDLIN (00ED) contains the low-order byte of the cursor address, while VIDLIN&1(00EE) contains the high-order byte. This pointer should be set to 7C00 when the system is loaded. The routines will take care of updating it.

Operation

Both routines use the accumulator to pass data back and forth to the calling routine. An 8-bit accumulator can have up to 256 possible codes, but only 224 are used by these routines. Table 1 shows how the codes are assigned to the different characters. A complete breakdown of all the codes and their displayed symbols is given in Tables 2(a), 2(b), and 2(c). The symbols are dependent on the type of character generator that your video board uses, but they will generally be the same as those shown.

If a machine code (00-1F) is given to the CHAROT routine, it will vector to a machine language routine that will perform the needed function. Routines are provided for NUL, BACKSPACE, TABULATION, LINEFEED, CARRIAGE RETURN, CLEAR, SHIFT LOCK, ESCAPE, and SCROLL. All other machine codes are set to vector to NUL if they are called. If you want to define any additional machine codes (or redefine any of the current ones), all that you have to do is write a machine language routine to perform the needed function and place its starting address in the machine code vector table (see Table 3).

PolyMorphic video graphics characters can be created on the screen. With graphics, the entire character block is divided into six large squares. When the GRAPHICS key is pressed, all six squares will light up at the cursor position. Then pressing any of the keys from 1 through 6 will turn off the corresponding square. Any or all of the squares may be turned off. If a mistake is made, then pressing any other key on the keyboard will relight the entire block. Releasing the GRAPHICS key will move the cursor to the next position.

The REPEAT key can be used by itself to move the cursor to the right without changing any of the displayed video. When used with any other key, it will continuously input that key over and over.

Several machine language routines are used to perform various functions. BACKSPACE will move the cursor to the left one position. It can be used with or without the REPEAT key.

When a CARRIAGE RETURN is pressed, it will cause the video from the cursor to the right margin to be blanked out. The cursor will be reset to the start of the next line. If that is off the screen, then the display will be scrolled and the cursor set to the bottom line.

A LINEFEED will move the cursor down one line from its current position but not move it horizontally. If it goes off the bottom of the screen, it will wrap around to the top line.

Pressing the SHIFT-LOCK key will set the shift-lock memory bit to 1. This has the same effect as holding down the SHIFT key as you type. It can be reset by depressing the SHIFT key by itself.

The ESCAPE key causes the program to jump to the address that is stored at 17FC. You will normally load the address of your monitor program in there. The return address of the routine that called the CHAROT routine is pulled from the stack so that repeated use of the ESCAPE function will not fill up the stack.

The CLEAR key causes the cursor to home to the top left corner. It will also set the first 64 bytes of page zero memory to 00. This is for routines that need to handle an entire line at one time. For more on this, see Appendix 1.

A SCROLL function is called whenever the screen has been filled. The routines automatically scroll the screen when the last position has been filled. If you want to manually scroll it, you can do it with an "up arrow" and CONTROL .

A TABULATION function

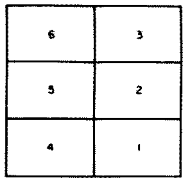

Fig. 1. Graphics block.

Code	Pressed
C0	None
C1	1
C2	2
C3	1, 2
C4	3
C5	1, 3
C6	2, 3
C7	1, 2, 3
C8	4
C9	1, 4
CA	2, 4
CB	1, 2, 4
CC	3, 4
CD	1, 3, 4
CE	2, 3, 4
CF	1, 2, 3, 4
D0	5
D1	1, 5
D2	2, 5
D3	1, 2, 5
D4	3, 5
D5	1, 3, 5
D6	2, 3, 5
D7	1, 2, 3, 5
D8	4, 5
D9	1, 4, 5
DA	2, 4, 5
DB	1, 2, 4, 5
DC	3, 4, 5
DD	1, 3, 4, 5
DE	2, 3, 4, 5
DF	1, 2, 3, 4, 5
E0	6
E1	1, 6
E2	2, 6
E3	1, 2, 6
E4	3, 6
E5	1, 3, 6
E6	2, 3, 6
E7	1, 2, 3, 6
E8	4, 6
E9	1, 4, 6
EA	2, 4, 6
EB	1, 2, 4, 6
EC	3, 4, 6
ED	1, 3, 4, 6
EE	2, 3, 4, 6
EF	1, 2, 3, 4, 6
F0	5, 6
F1	1, 5, 6
F2	2, 5, 6
F3	1, 2, 5, 6
F4	3, 5, 6
F5	1, 3, 5, 6
F6	2, 3, 5, 6
F7	1, 2, 3, 5, 6
F8	4, 5, 6
F9	1, 4, 5, 6
FA	2, 4, 5, 6
FB	1, 2, 4, 5, 6
FC	3, 4, 5, 6
FD	1, 3, 4, 5, 6
FE	2, 3, 4, 5, 6
FF	1, 2, 3, 4, 5, 6

Table 2(c). Graphics characters and codes.

Key	IC1	IC2	Code	Results
SPACE	0	5	20	Places a blank on the screen.
BACKSPACE	8	7	08	Backspaces cursor one position to the left.
TAB	9	7	09	Moves cursor to the next position with a tab set on. TAB with SHIFT will set a tab; TAB with CONTROL will clear a tab.
LINEFEED	A	7	0A	Moves cursor down one line, wraps around to top of screen.
CAR RET	D	7	0D	Blanks line from cursor to right margin. Resets cursor to start of next line. Scrolls if on the last line.
CLEAR	8	6	18	Clears the line register and homes the cursor.
SHIFT LOCK	A	6	1A	Sets shift-lock mode to on.
ESCAPE	B	6	1B	Transfers control to (17FC).

Table 2(b). Machine codes and results.

Address	Data	Machine Code	Called by
0300	01 31	00 NUL*	
0302	01 31	01 SOH	
0304	01 31	02 STX	
0306	01 31	03 ETX	
0308	01 31	04 EOT	
030A	01 31	05 ENG	
030C	01 31	06 ACK	
030E	01 31	07 BEL	
0310	02 31	08 BS	BACKSPACE
0312	7B 31	09 HT	TAB
0314	22 31	0A LF	LINEFEED
0316	01 31	0B VT	
0318	01 31	0C FF	
031A	16 31	0D CR	CARRIAGE RETURN
031C	01 31	0E SO	
031E	01 31	0F SI	
0320	01 31	10 DLE	
0322	01 31	11 DC1	
0324	01 31	12 DC2	
0326	01 31	13 DC3	
0328	01 31	14 DC4	
032A	01 31	15 NAK	
032C	01 31	16 SYN	
032E	01 31	17 ETB	
0330	42 31	18 CAN	CLEAR
0332	01 31	19 EM	
0334	34 31	1A SUB	SHIFT LOCK
0336	3D 31	1B ESC	ESCAPE
0338	01 31	1C FS	
033A	01 31	1D GS	
033C	54 31	1E RS	↑ & CONTROL
033E	01 31	1F VS	

*Table 3. Machine code vector table. *All undefined codes default to NUL.*

has been programmed into this software. Each of the 64 characters on a line has a unique tab bit that can be set or cleared. When the TAB key has been pressed, the cursor will move to the right and will not stop until it reaches a position with the tab bit set or the right margin. To set the tab, you must position the cursor to the desired column and press TAB and SHIFT. To clear a tab, use TAB and CONTROL. Don't tab the column on the left margin because that tab bit is also used as a shift-lock bit.

Memory Requirements

The software itself can be placed in either ROM or RAM and only requires 512 bytes. The video display board should be comparable

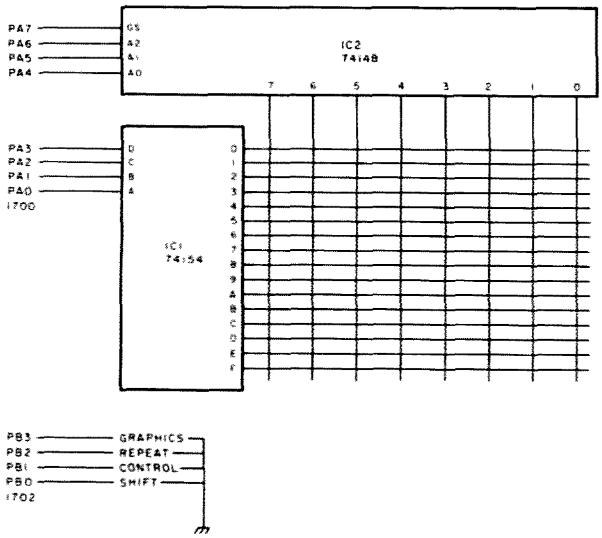

Fig. 2. Hardware requirements for the keyboard port.

to a PolyMorphic board in order to use all of the features of the software. It should reside in memory at 7C00-7FFF.

The software uses 7 bytes of page zero memory. Five bytes, from 0080 through 0084, are only used while the routines are executing and may be used by other programs as required. Only 2 bytes of memory must be uniquely assigned to the video I/O system. These are 00ED and 00EE. They contain the address of the cursor position. During system power up, you must set these to 00, 7C. The program will update and change them as required.

The first 64 bytes of page 03 contain the machine code vector table. This should be RAM in order to allow you to modify and expand the machine codes.

Eight bytes, from 0340 through 0347, contain the tabulation table. The 64 single bits in this table contain the tab status for the 64-character line. A 1 is a set tab, and a 0 is a cleared tab. The tab bit for the left margin row also serves as a shift-lock memory.

CHARIN Routine: Theory of Operation

When the CHARIN routine is called, it will initialize the Y-index and the data direction register for the keyboard port. The character that is currently on the screen where the cursor is to go is read and stored in memory. A cursor (FF) is then displayed on the screen.

The program then starts its main scanning loop at LOPI01. Y is set to sixteen, and the program increments the keyboard port sixteen times. Each time, bit #7 is tested to see if a key is pressed. If one is, then the program will branch to PROCES.

If no key is pressed, the port with the SHIFT, CONTROL, REPEAT, and GRAPHICS keys is tested.

When a SHIFT key is pressed by itself, the program will clear the shift-lock bit to 0. It does this by ANDing the shift-lock memory byte with 7F and storing it back into memory.

At location CONI01, the program will test the REPEAT key. When it is pressed, the program will branch up to SKIP. The cursor is turned off, and the video pointer is moved to the next position. The cursor is then turned back on again. The use of the DELAY subroutine at 3007 and 3019 will assure that the cursor will move slowly enough across the screen.

If the REPEAT key was not pressed, the program would have tested the GRAPHICS key and branched back to the main scanning loop if it was not pressed.

When the GRAPHICS key is pressed, the program will store a 00 on the screen, which lights up the entire character block. The program then goes into a loop that tests both the GRAPHICS key and scans the keyboard for a pressed key. If the GRAPHICS key is released, the character that is currently on the screen will be sent to the calling program. If any keyboard key is pressed, it will be tested to make sure that it is between 1 and 6. If any illegal key is pressed, the program branches back to the start of the graphics section and starts over.

When a key from 1 through 6 is pressed, the key is masked with an 07 to clear the five highest bits. The result is then placed in Y. The accumulator is cleared, and a single 1 in the carry flag is shifted into the accumulator Y number of times. This positions a single 1 bit in the accumulator, according to the number of the key that was pressed. The result is combined with the character already on the screen and then is displayed. This process is repeated until the GRAPHICS key is released.

When the main scanning loop has detected that a

ASCII key has been pressed, it will branch to PROCES (3074). Here it jumps directly to a short delay subroutine. This gives around 700 microseconds delay and resets Y to 00. The delay, along with the nature of the scan routine, will ensure that, when the code is read from the port, it will not be during a switch bounce.

The cursor is turned off, and the normal code is read from the keyboard port and saved in memory. The program then goes into a wait loop. The program will exit the loop only when: (1) the ASCII key is released, (2) the REPEAT key is pressed, and (3) another key on the same matrix row as the original key, but with a higher priority connection to IC2, is pressed. That third condition ensures that, when you press a second key without releasing the first one, both of them will be correctly read.

Once the program is out of the wait loop, it will test the code that it has received. If the code is a machine code or a SPACE, then the program will terminate and give that code to the calling routine.

For all other codes, the CONTROL key is then tested. If pressed, it will AND the code with 3F. That strips away the two high-order bits.

The SHIFT key and shift-lock bit are then tested. If neither is on, then the program will terminate and pass the code to the calling routine.

If the code is to be shifted, it is tested to determine what needs to be done. Codes that are greater than or equal to 40 need only to be ORed with 20 to perform the shift. These are all the letter keys. Codes that are less than 20 can only be made by Greek and math symbols, so they must be ORed with 80. Any other code must be between 20 and 40, and these require that their fifth bit is inverted. This is done with an

Program A. Main listings.

```
0000                 LR                          Line register 64 bytes
0080                 TEMP                        Temp storage 4 bytes
0084                 CURSOR                      Cursor storage
00ED                 VIDLIN                      Cursor address
0300                 MACTAB                      Vector table 64 bytes
0340                 TABTAB                      Tab table 8 bytes
1700                 PORTS                       Keyboard ports

3000  A5  84         SKIP     LDA CURSOR         Repeat section
3002  91  ED                  STA (VIDLIN),Y     Cursor off
3004  20  E7  30              JSR NEXCHA
3007  20  04  31              JSR DELAY
300A  A0  00         CHARIN   LDY#00             Start of routine
300C  A9  0F                  LDA#0F
300E  8D  01  17              STA PORTS&1        DDR
3011  B1  ED                  LDA (VIDLIN),Y
3013  85  84                  STA CURSOR
3015  A9  FF                  LDA#FF
3017  91  ED                  STA (VIDLIN),Y     Cursor on
3019  20  04  31              JSR DELAY
301C  A0  10         LOPI01   LDY#10             Main loop
301E  EE  00  17     SCAN     INC PORTS
3021  2C  00  17              BIT PORTS          Test for key
3024  10  4E                  BPL PROCES         Key pressed
3026  88                      DEY
3027  D0  F5                  BNE SCAN           Test 16 times
3029  AD  02  17              LDA PORTS&2        Test other port
302C  4A                      LSR A
302D  B0  0A                  BCS CONI01         SHIFT not pressed
302F  48                      PHA
3030  A9  7F                  LDA#7F
3032  2D  40  03              AND TABTAB
3035  8D  40  03              STA TABTAB         Clear shift lock
3038  68                      PLA
3039  4A             CONI01   LSR A
303A  4A                      LSR A
303B  90  C3                  BCC SKIP           Repeat key pressed
303D  4A                      LSR A
303E  B0  DC                  BCS LOPI01         GRAPHICS not pressed
3040  A9  00         GRAPH    LDA#00
3042  91  ED                  STA (VIDLIN),Y     Turn on block
3044  EE  00  17     LOPI02   INC PORTS          Search for key
3047  AD  02  17              LDA PORTS&2
304A  29  08                  AND#08             Mask off GRAPHICS
304C  D0  21                  BNE CONI02         GRAPHICS released
304E  AD  00  17              LDA PORTS
3051  30  F1                  BMI LOPI02         ASCII not pressed
3053  C9  31                  CMP#31
3055  90  E9                  BCC GRAPH          Key less than 1
3057  C9  37                  CMP#37
3059  B0  E5                  BCS GRAPH          Key gtr than 6
305B  29  07                  AND#07
305D  A8                      TAY
305E  A9  00                  LDA#00
3060  38                      SEC
3061  2A             LOPI03   ROL A              Shift bit y times
3062  88                      DEY
3063  D0  FC                  BNE LOPI03
3065  11  ED                  ORA (VIDLIN),Y     Combine with screen
3067  91  ED                  STA (VIDLIN),Y     Display
3069  20  04  31              JSR DELAY
306C  38                      SEC
306D  B0  D5                  BCS LOPI02         Relative jump
306F  A9  C0         CONI02   LDA#C0             Convert to graphics
3071  11  ED                  ORA (VIDLIN),Y     code and return
3073  60                      RTS
3074  20  12  31     PROCES   JSR DEL            Keybounce delay
3077  A5  84                  LDA CURSOR
3079  91  ED                  STA (VIDLIN),Y     Cursor off
307B  AD  00  17              LDA PORTS          Fetch ASCII code
307E  85  80                  STA TEMP
3080  AD  02  17     LOPI04   LDA PORTS&2
3083  29  04                  AND#04
3085  F0  09                  BEQ CONI03         REPEAT pressed
3087  AD  00  17              LDA PORTS
308A  30  04                  BMI CONI03         ASCII released
308C  C5  80                  CMP TEMP
308E  F0  F0                  BEQ LOPI04         Same key pressed
3090  A5  80         CONI03   LDA TEMP           Fetch normal code
3092  C9  21                  CMP#21
```

```
3094  90 19          BCC CONI05        Machine code
3096  AD 02 17       LDA PORTS&2
3099  29 03          AND#03
309B  C9 02          CMP#02
309D  B0 08          BCS CONI04        CONTROL not pressed
309F  48             PHA
30A0  A9 3F          LDA#3F
30A2  25 80          AND TEMP
30A4  85 80          STA TEMP
30A6  68             PLA
30A7  4A       CONI04 LSR A
30A8  90 08          BCC SHIFT         SHIFT pressed
30AA  2C 40 03       BIT TABTAB
30AD  30 03          BMI SHIFT         Shift lock set
30AF  A5 80    CONI05 LDA TEMP         Fetch code
30B1  60             RTS
30B2  A5 80    SHIFT  LDA TEMP
30B4  C9 40          CMP#40
30B6  90 03          BCC LO            Code less than 40
30B8  09 20          ORA#20
30BA  60             RTS
30BB  C9 20    LO     CMP#20
30BD  B0 03          BCS MED           Code from 20 to 3F
30BF  09 80          ORA#80            Greek and math
30C1  60             RTS
30C2  49 10    MED    EOR#10           Invert 5th bit
30C4  60             RTS
30C5  A0 00    CHAROT LDY#00           Single char output
30C7  48             PHA
30C8  C9 20          CMP#20
30CA  B0 10          BCS CONI06        Not a machine code
30CC  0A             ASL A
30CD  85 81          STA TEMP&1
30CF  A9 6C          LDA#6C
30D1  85 80          STA TEMP
30D3  A9 03          LDA#03
30D5  85 82          STA TEMP&2
30D7  20 80 00       JSR TEMP          Indirect jump to table
30DA  68             PLA               Restore code
30DB  60             RTS
30DC  C9 C0    CONI06 CMP#C0
30DE  B0 02          BCS CONI07        Graphics
30E0  29 7F          AND#7F            Clear high bit
30E2  49 80    CONI07 EOR#80           Invert high bit
30E4  91 ED          STA (VIDLIN),Y    Display
30E6  68             PLA
30E7  48       NEXCHA PHA              Increment VIDLIN
30E8  E6 ED          INC VIDLIN
30EA  D0 0F          BNE OUTI01
30EC  E6 EE          INC VIDLIN&1
30EE  10 0B          BPL OUTI01        Result on screen
30F0  20 54 31       JSR SCROLL
30F3  A9 C0          LDA#C0
30F5  85 ED          STA VIDLIN
30F7  A9 7F          LDA#7F
30F9  85 EE          STA VIDLIN&1
30FB  A9 3F    OUTI01 LDA#3F
30FD  25 ED          AND VIDLIN
30FF  AA             TAX
3100  68             PLA
3101  60             RTS
3102  C6 ED    BACSPC DEC VIDLIN       Backspace routine
3104  48       DELAY  PHA              Delay routine
3105  A9 55          LDA#55
3107  85 81          STA TEMP&1
3109  20 12 31 LOPI05 JSR DEL
310C  C6 81          DEC TEMP&1
310E  D0 F9          BNE LOPI05
3110  68             PLA
3111  60             RTS
3112  C8       DEL    INY
3113  D0 FD          BNE DEL
3115  60             RTS
3116  A9 3F    CART   LDA#3F           Car ret routine
3118  91 ED          STA (VIDLIN),Y    Display a blank
311A  20 E7 30       JSR NEXCHA
311D  25 ED          AND VIDLIN
311F  D0 F5          BNE CART          Line not finished
3121  60             RTS
3122  18       LINFD  CLC              Linefeed routine
3123  A5 ED          LDA VIDLIN
```

EOR#10.

The CHARIN routine has now finished, and the accumulator can contain any one of the 224 possible codes that can be produced at the keyboard.

CHAROT Routine: Theory of Operation

Now that you have received a code from the keyboard, you want to display it on the screen. The CHAROT routine does this. The routine first tests the code to see if it is less than 20. If it is, the code must be a machine code.

When a machine code is found, it is doubled with an ASL A command and stored in memory. The memory byte before it is filled with a 6C, which is the op code for an indirect jump. The byte after it is filled with 03, which is the page number of the machine code table. Then, by jumping to the address with the 6C op code, the program makes an indirect jump into the machine code table. Whatever address is stored in that position of the table takes control of the processor.

If the code was not a machine code, it is tested again at CONI06. A nongraphics character will be masked with 7F to clear the high-order bit. The high-order bit for all characters is inverted to conform with the PolyMorphic video board. The character is displayed by storing it in the video memory.

The pointer at VIDLIN is incremented to the next position. If the resulting address is 8000, the screen is scrolled, and the pointer is reset to 7FC0. The value of the X-index is set from 00 to 3F, depending on the new cursor position. For more on this, see Appendix 1.

Machine Codes: Theory of Operation

The nine machine codes in the software were designed to make using the system easier and to simulate the action of a normal TTY machine. A

vector table containing the starting addresses of all the routines was chosen to allow for flexibility and expansion. The routines work as follows:

NUL: The simplest routine is merely a jump to an RTS statement. It, in effect, does nothing. All undefined codes in the machine table default to a NUL.

BACKSPACE: This routine decrements the value in the low-order byte of the cursor address (00ED). It then delays for a moment in order to slow down the cursor movement when used with the REPEAT key. Because the high-order byte of the address is never changed, it will not backspace across the left margin when the cursor is on lines 1, 5, 9, and 13.

CARRIAGE RETURN: This routine takes a Poly-Morphic blank (3F) and stores it on the screen at the cursor. It then increments the cursor to the next position and ANDs the low-order byte of the new cursor position with 3F. If the result is not 00, then the cursor is not yet to a new line. The program repeats until the cursor is at the start of the next line. Scrolling occurs when the cursor is incremented into address 8000.

LINEFEED: This routine works by adding 40 to the cursor address. If the result is greater than 7FFF, the high-order byte is set to 7C. The decimal flag in the 6500 must be cleared in order to use this routine.

SHIFT LOCK: This routine merely sets the highest bit at address 0340 and does not affect any others. This bit would normally be the tab status bit for the left-hand margin of the screen. Since there is no need to tab to a margin (a CARRIAGE RETURN does the same thing), it is used as a shift-lock indicator.

ESCAPE: This routine pulls the normal return address of the program off the stack and jumps to the address stored at 17FC and

```
3125  69  40               ADC#40
3127  85  ED               STA VIDLIN
3129  A9  00               LDA#00
312B  65  EE               ADC VIDLIN&1
312D  10  02               BPL OUTI02          Result on screen
312F  A9  7C               LDA#7C
3131  85  EE       OUTI02  STA VIDLIN&1
3133  60                   RTS
3134  AD  40  03   SHIFTL  LDA TABTAB          Shift lock routine
3137  09  80               ORA#80
3139  8D  40  03           STA TABTAB
313C  60                   RTS
313D  68           ESCAPE  PLA                 Escape routine
313E  68                   PLA
313F  6C  FC  17           JMP (17FC)
3142  A9  7C       CLEAR   LDA#7C              Clear line register
3144  85  EE               STA VIDLIN&1        and home cursor
3146  A9  00               LDA#00
3148  85  ED               STA VIDLIN
314A  A0  3F               LDY#3F
314C  99  00  00   LOPI06  STA LR,Y
314F  88                   DEY
3150  10  FA               BPL LOPI06
3152  C8                   INY
3153  60                   RTS
3154  84  80       SCROLL  STY TEMP            Scroll routine
3156  A9  40               LDA#40
3158  85  82               STA TEMP&2
315A  A9  7C               LDA#7C
315C  85  81               STA TEMP&1
315E  85  83               STA TEMP&3
3160  B1  82       LOPI07  LDA (TEMP&2),y
3162  91  80               STA (TEMP),Y
3164  E6  80               INC TEMP
3166  D0  02               BNE CONI08
3168  E6  81               INC TEMP&1
316A  E6  82       CONI08  INC TEMP&2
316C  D0  F2               BNE LOPI07
316E  E6  83               INC TEMP&3
3170  10  EE               BPL LOPI07          Still on screen
3172  A9  3F               LDA#3F
3174  91  80       LOPI08  STA(TEMP),Y         Blank out last line
3176  E6  80               INC TEMP
3178  D0  FA               BNE LOPI08
317A  60                   RTS
317B  AD  02  17   TAB     LDA PORTS&2         Tab routine
317E  29  03               AND#03
3180  C9  03               CMP#03              Test for S or C
3182  D0  12               BNE SHCT            Shift or control
3184  20  E7  30   TABIT   JSR NEXCHA
3187  20  A2  31           JSR SETUP
318A  B0  12               BCS UNSET           Tab found
318C  20  9E  31           JSR UNSET
318F  A9  3F               LDA#3F
3191  C5  80               CMP TEMP
3193  D0  EF               BNE TABIT           Not end of line
3195  60                   RTS
3196  20  A2  31   SHCT    JSR SETUP
3199  AD  02  17           LDA PORTS&2
319C  4A                   LSR A
319D  4A                   LSR A
319E  A4  81       UNSET   LDY TEMP&1
31A0  10  10               BPL LOPI09          Unconditional jump
31A2  A9  3F       SETUP   LDA#3F
31A4  25  ED               AND VIDLIN
31A6  85  80               STA TEMP
31A8  86  82               STX TEMP&2
31AA  A8                   TAY
31AB  A9  3F               LDA#3F
31AD  38                   SEC
31AE  E5  80               SBC TEMP
31B0  85  81               STA TEMP&1
31B2  A2  07       LOPI09  LDX#07
31B4  3E  40  03   LOPI10  ROL TABTAB,X        Shift tabtab Y times
31B7  CA                   DEX
31B8  10  FA               BPL LOPI10
31BA  88                   DEY
31BB  10  F5               BPL LOPI09
31BD  A6  82               LDX TEMP&2
31BF  C8                   INY
31C0  60                   RTS
```

17FD. This should be set to the starting address of your system monitor and acts as an easy way to stop the program when it asks for data. Since this system is not an interrupt driven system, it is handy to also connect a RESET line to a spare keyswitch to handle any continuous loops in your program.

CLEAR: This routine sets the VIDLIN pointer to 7C00 (upper left corner) and sets the first 64 bytes in page zero to 00. Appendix 1 gives more details concerning the use of the page zero memory.

SCROLL: The SCROLL routine acts to move all the data on the screen up one line. It does this by setting up two pointers in page zero memory. The first pointer points to 7C00, and the second one points to 7C40. The 64-byte difference is the length of one line. Data is read from the second pointer and stored at the first. Both are then incremented by one. When the second pointer has reached 8000, the lower 15 lines have been moved to the upper 15 lines. A PolyMorphic blank (3F) is then used to fill up the bottom line.

TABULATION: This routine actually does three separate things. It sets a tab when TAB is pressed along with a SHIFT key. It clears a tab when TAB is pressed along with the CONTROL key. When TAB is pressed by itself, it moves the cursor to the right and stops it at the first column with a set tab. If none are set, it will stop at the right margin.

The program maintains a table for the tab status at 0340. The 64 columns require 8 bytes of RAM. These 8 memory bytes and carry flag are turned into a 65 x 1 recirculating shift register by the SETUP routine in the TAB program. When SETUP is called, it figures out which one of the 64 columns it is looking for by ANDing 3F with the cursor position. It then uses two loops and a ROL instruction to shift all 64 bits of memory and the carry flag until the tab bit it needs has been shifted into the carry flag. While in the flag, it can easily be set, cleared, or tested. The SETUP routine also computes the number of times that it will have to continue to shift the memory in order to restore it to its original position. The routine UNSET takes this number and uses it to restore the table.

When the TAB routine is entered, it first tests the SHIFT and CONTROL keys to see if they are pressed. If they are, it shifts the table until the tab bit for the current position is in the carry flag. It then sets or clears the flag, depending on the key pressed, and restores the table. The only bit affected is the tab bit for the current position.

If neither the SHIFT nor CONTROL key is pressed, the cursor is moved one position. The cursor is incremented by subroutine NEXCHA, and the table is then shifted until the tab bit for that column is in the carry flag. A set carry flag will cause the program to branch to the UNSET routine, where the table is restored. The routine is terminated with the cursor left on a set tab position.

If the carry flag was not set, the program would still use the UNSET routine to restore the table. But then it would test the column, and, if it was not at the right margin, it would go back and start again. Eventually, it would find either a set tab or the margin. ■

APPENDIX 1
Using the Routines

The single character I/O used in these routines is generally compatible with standard TTY I/O routines. One incompatibility is that the CHARIN routine will not (except for graphics) echo the inputted character to the screen. If you merely set the starting address for CHARIN and CHAROT in your system I/O vectors, you may find that you cannot see anything that you type. If that is the case, use this patch in your program:

```
2000 20 0A 30 INPUT   JSR CHARIN
2003 4C C5 30 OUTPUT  JMP CHAROT
```

Now, when you jump to subroutine INPUT, it will input a character and also display it. CHAROT restores the accumulator when finished, so the data is preserved.

Sometimes it is desirable to input an entire line rather than just one character. This way you can edit and correct any mistakes, and the calling program only sees the final result. One way to do this is by using the first 64 bytes of page zero RAM as a line register. This program will accept up to one line of characters and store them in the line register. It returns to the calling program when you type a CARRIAGE RETURN.

```
START   LDX#00
LOOP    JSR CHARIN
        STA 00,X
        JSR CHAROT
        CMP#0D
        BNE LOOP
        RTS
```

A simple program that will display an entire line at one time is:

```
START   LDX #00
LOOP    LDA 00,X
        JSR CHAROT
        CMP#0D
        BNE LOOP
        RTS
```

Both of these programs work fine with displayed characters. Since the CHAROT routine sets the X-index to a number that corresponds to the cursor position, it can be used to index through the line register. One weakness that these programs share is that nondisplayed characters (LINEFEED, CLEAR, etc.) will not alter the X-index. This means that machine codes cannot be used with these routines. If you want to use them, you must alter the routines to set the X-index to its proper value after each machine code.

William Slattery WB2IPD
132 West Fourth Avenue
Roselle NJ 07203

Computerized Loop Antenna Design

—*in BASIC*

Almost any time you see an article on small loop antennas, the author points out that such antennas are probably the least explored by amateurs.

Then he points out why that's so, and, indeed, you say, the little darlings can well stay unexplored. Their frighteningly low radiation resistance is almost instantaneous discouragement.

But (dare I risk nonconformity among authors), although loop antennas are probably the least explored by amateurs, they have much to offer. So much, in fact, that it is almost astounding that the dipole is not given less attention.

I, for one, am tired of seeing the radiation patterns of dipoles and having it pointed out to me even before I put one up that the damn thing is going to shoot most of my rf straight up unless I have two giant redwood trees and a chair lift.

The loop is small — at least as compared with its operating wavelength. It is directional — at least it can be rotated without having to move two giant redwoods a few hundred feet. It has a narrow bandwidth — and if you think that is a disadvantge, you haven't listened to atmospheric noise in the summer on 80 meters. But it is tunable and could be remotely tuned with a motor, so bandwidth is not really a problem once the system is operational.

Consider the alternatives: a dipole which intrudes upon Eastern Airlines' flight schedules or a vertical which requires a copper backyard for optimum results. If I had enough copper to make a really good ground system for a vertical, I wouldn't use it for an antenna (as much as I love amateur radio). I'd melt the stuff and retire. Maybe put down a few radials of solid gold, which probably is cheaper.

Small loop antennas can be the answer for the amateur with space and tower limitations who does not have a biological noise filter twixt his anvil bone and his stirrup bone.

A magnetic loop antenna, which does to the magnetic component of the rf wavefront what dipoles do to the electrical component, can almost be put in a cave and will still work.

Ideally, it turns out, it should not be mounted in a cave, so you don't have to have one of those either. Its lowest radiation angle —and, hence, its most effective position for DX—is about five-sixteenths wavelength above ground. At 80 meters, that is only slightly more than a quarter wave or slightly more than 33 feet. That's not bad, when a dipole would have to be part of a thundercloud to give the same yield, and then in only two directions.

Mounted vertically, as it should be to maximize radiation resistance, the loop can be rotated to null out noise and QRM — kind of like a beam on 80.

As you will probably have noticed if you are older than 12, there is no such thing as a free lunch. What price this miraculous antenna? Well, there is that radiation resistance thing...

Radiation resistance does not exist, but it is measurable, and, if you want to be heard more than a block away, it is very, very important.

In physics, accounting is strict, much stricter than a bank's ledger. If power goes into something and less power comes out, there has to be a reason. The credit and debit sides of the energy balance sheets must match.

When you pump power into an antenna, the energy sets up standing fields near the system. There is less power in those fields and in the conductor itself than was pumped in there. So where did it go? It went to that rare DX station's receiving antenna, that's where.

Well, says the physicist accountant, if the system "lost" that power to the "ether" — which doesn't exist either — there must be a reason. There the comparison between dollar and electrical accountants ends. The electrical accountant may have to make his balance sheets match more accurately, but he engages in some practices which would land him in a federal pen if he tried them with bucks.

He invents things which don't exist but at least explain where the power

```
10 Rem Program designs small loop antennas and show effects
20 Rem of altering various parameters
30 Rem by William Slattery
40 Rem October, 1977
50 For x = 1 to 6: #"": next x
60 # "loop antenna designer"
70 For x = 1 to 5: #"": next x
80 # "this program aids in the design"
90 # "of loop antennas small compared"
100 # "to their operating frequencies"
110 #
120 # "enter data as requested."
130 #
140 For x = 1 to 5000: next x
150 For x = 1 to 20: #"": next x
160 Input "Enter frequency", F
170 #
180 #
190 Input "Enter loop diameter", D
200 Let K = D: Let Z = F
210 #
220 Gosub 1180
230 # "the radiation resistance of a"
240 # "loop antenna"; D; "feet in diameter"
250 # "Is"; R; "at"; F; "MHz"
260 #
270 # "loop antenna efficiency depends"
280 #"on the diameter and composition"
290 #"of the conductor."
300 #
310 Input "Enter conductor diameter (inches)", D(1)
315 Let P = D (1)
320 #
330 #"Is the conductor copper or aluminum?"
340 #"Enter A or C"
350 Input A$
360 If A$ = "C" then B$ = "copper"
370 If A$ = "A" then B$ = "aluminum"
380 Gosub 1200
390 Gosub 1250
400 #
410 # "Do you wish to alter a parameter"
420 # "And observe the effects? (Enter Y or N)"
430 Input D$
440 If D$ = "Y" then 490
450 If D$ = "N" then #"Do you wish a new design?"
460 If D$ = "N" then Input C$
470 If C$ = "Y" then 160
480 End
490 # "Do you wish to alter —"
500 #"1. Frequency."
510 #"2. Loop diameter."
520 #"3. Conductor diameter."
530 Input "Enter appropriate number", C
540 If C = 1 then 590
550 If C = 2 then 870
560 If C = 3 then 1030
570 #"Enter your choice"
580 GOTO 490
590 Let F = 1.8
600 Gosub 1180
610 Gosub 1200
620 Gosub 1250
630 Let F = 3.8
640 Gosub 1180
650 Gosub 1200
660 Gosub 1250
670 Let F = 7.2
680 Gosub 1180
690 Gosub 1200
700 Gosub 1250
710 Let F = 14.25
720 Gosub 1180
730 Gosub 1120
740 Gosub 1250
750 Let F = 21.2
760 Gosub 1180
770 Gosub 1200
780 Gosub 1250
790 Let F = 28.9
800 Gosub 1180
810 Gosub 1200
820 Gosub 1250
830 # "The formulae used in these cal-"
840 # "culations are of insufficient"
850 # "validity for frequencies above 10 meters."
860 GOTO 410
870 For x = 1 to 3 : #"": next x
880 Let F = Z: Let D(1) = P
890 Let D = 3
900 # "Frequency in memory is"; F; "MHz"
910 # "Conductor is"; B$; D(1); "inches"
920 # "in diameter"
930 For x = 1 to 3000: next x
940 #
950 # Diam.              Eff."
960 for x = 1 to 8
970 Gosub 1180
980 Gosub 1200
990 # D, E
1000 Let D = D + 1
1010 Next x
1020 GOTO 410
1030 For x = 1 to 3; #""; next x
1040 # "Frequency in memory is", Z
1050 #
1060 # "Loop is"; B$ "and is"; d; "feet"
1070 #"In diameter": #
1080 For x = 1 to 3000: next x
1090 #
1100 # "Diam.              Eff."
1110 Let D(1) = .5
1120 For x = 1 to 10
1130 Gosub 1180
1135 Gosub 1200
1140 # D(1)
1150 Let D(1) = D(1) + .5
1160 Next x
1170 GOTO 410
1180 Let R = 31200*((3.14*(D/2)↑2)/(984/F)↑2)↑2
1190 RETURN
1200 Let R(1) = SQRT(F)/(1000*D(1))
1210 If A$ = "A" then 1390
1220 R(2) = R(1)*(3.14*D)
1230 E = R/(R + R(2))*100
1240 RETURN
1250 For x = 1 to 3: #"": next x
1260 # "The loss resistance of"
1270 # "a loop antenna"; D; "feet"
1280 # "in diameter snf made of"
1290 # "D(1); "inch"; B$; "tubing"
1300 # "Is"; R(2); "Ohms at"; F; "MHz"
1310 #
1320 # "Its radiation is"; R; "Ohms"
1330 #
1340 #
1350 # "Its efficiency is"; E; "per cent"
1360 #
1370 For x = 1 to 5000: next x
1380 RETURN
1390 Let R(1) = R(1)*1.28
1400 GOTO 1220
```

Fig. 1. Loop antenna designer.

```
LOOP ANTENNA DESIGNER

THIS PROGRAM AIDS IN THE DESIGN OF LOOP ANTENNAS
SMALL COMPARED TO THEIR OPERATING FREQUENCIES
ENTER DATA AS REQUESTED
ENTER FREQUENCY 3.8
ENTER LOOP DIAMETER 14
The radiation resistance of a loop antenna 14 feet in diameter is
.16427068 at 3.8 MHz
Loop antenna efficiency depends on the diameter and composi-
tion of the conductor
ENTER CONDUCTOR DIAMETER(INCHES)
3
Is the conductor copper or aluminum? ENTER A OR C
C
The loss resistance of a loop antenna 14 feet in diameter and
made of 3-inch copper tubing is .02857825 Ohms at 3.8 MHz
Its radiation resistance is .16427068 Ohms
Its efficiency is 85.181017 per cent
Do you wish to alter a parameter and observe the effects?
(ENTER Y OR N)
Y
Do you wish to alter—
1. frequency
2. loop diameter
3. conductor diameter
ENTER APPROPRIATE NUMBER
1
The loss resistance of a loop antenna 14 feet in diameter and
made of 3-inch copper tubing is 1.9668901E-02 at 1.8 MHz
Its radiation resistance is 8.2701934E-03 Ohms
Its efficiency is 29.600793 percent
(NOTE: Program repeats above paragraph substituting frequen-
cies of 3.8, 7.2, 14.2, 21.2, and 28.9 MHz in the calculations)
The formulae used in calculations are of insufficent validity for
frequencies above 10 meters
Do you wish to alter a parameter and observe the effects?
(ENTER Y OR N)
Y
Do you wish to alter—
1. frequency
2. loop diameter
3. conductor diameter
ENTER APPROPRIATE NUMBER
2
Frequency in memory is 3.8 MHz
Loop is copper and is 3 inches in diameter
DIAMETER        EFFICIENCY
   3             5.351593
   4            11.82175
   5            20.751192
   6            31.151973
   7            41.810146
   8            51.749839
   9            60.42897
  10            67.68762
Do you wish to alter a parameter and observe the effects?
(ENTER Y OR N)
Y
Do you wish to alter—
1. frequency
2. loop diameter
3. conductor diameter
ENTER APPROPRIATE NUMBER
3
Frequency in memory is 3.8 MHz
Loop is copper and is 14 feet in diameter
DIAMETER        EFFICIENCY
  .5             24
  1              38
  1.5            48
  2              55
  2.5            61
  3              65
  3.5            68
  4              71
  4.5            74
  5              76
Do you wish to alter a parameter and observe the effects?
(ENTER Y OR N)
N
Do you wish a new design?
Y
ENTER FREQUENCY 14.35
ENTER LOOP DIAMETER 6
The radiation resistance of a loop antenna 6 feet in diameter is
1.1270057 at 14.35 MHz
Loop antenna efficiency depends on the diameter and composi-
tion of the conductor.
ENTER CONDUCTOR DIAMETER(INCHES)
1
Is the conductor copper or aluminum? ENTER A OR C
A
The loss resistance of a loop antenna 6 feet in diameter and
made of 1-Inch aluminum tubing is 9.1395378E-02 Ohms at 14.35
MHz
Its radiation resistance is 1.1270057 Ohms
Its efficiency is 92.498743 per cent
Do you wish to alter a parameter and observe the effects?
(ENTER Y OR N)
N
Do you wish a new design?
N
ready
```

Fig. 2. Loop antenna designer — sample run.

went. Radiation resistance is what he invents.

As you've probably guessed, the more power lost to the ether, the quicker you'll win your WAC.

Small loops have very little radiation resistance, but they do have, like anything else, true loss resistance. That ohmic resistance eats up power and turns it into heat. And, unless Pitcairn Island now has antennas sensitive into the infrared, heat is wasted energy.

But, what really matters is the ratio of radiation resistance to loss resistance. It determines the efficiency of an antenna. If losses are kept low, compared to radiation resistance (no matter how low it is), efficiency is high.

Practical loops may be as efficient as 80 per cent or more.

If that doesn't impress you, run out to your mobile, call and chat with someone across the country, and remember that your base-loaded whip has an efficiency somewhere in the single digits.

Keeping loss resistance low is accomplished two ways. One is by reducing the resistance of joints. Obviously, the answer here is to reduce the number of joints and weld or carefully solder what joints there must be.

Another is by increasing the size of the conductor. Rf flows on surfaces. Increase surface areas, and you decrease resistance.

There has to be an optimum in here somewhere. There is, but it depends on your QTH and pocketbook. Sewer pipe made out of copper is a great conductor at 3 MHz, but you'll begin to wonder why they keep gold in Fort Knox.

A 50-foot diameter loop is terrifically efficient, but your house can jump rope

through it.

Hence, the following program.

Let me say that, in real life, I am not an electronics engineer. I'm just a newspaper reporter, but that at least means I can read, and that's what it takes to learn enough about antenna design and programming to come up with this masterpiece.

To be truthful, the only book larger than the one about what I don't know about antenna design is the one about what I don't know about programming.

You can get a few more articles on small loops before building one. And you can probably get an education in inefficient program design by reading my loop antenna designer. You can also improve it.

One addition might be a section to relate radiation resistance to height above ground. Another could compute the angle of the strongest radiation lobe for a given height. The formulas are not difficult and not difficult to obtain.

You probably could simply streamline this program to run better. It is written in Digital Group Maxi-BASIC and runs on my Z-80 system in much less than the 18K memory I've got. I'd guess the BASIC takes up about 13K and the program about 2.5K.

I'm sure the program could be modified to fit any other BASIC, but then again I'm making that statement from the "expert" position of a person who doesn't know a damn thing about any other BASIC.

The antenna, I think, has promise. I have always found the most exciting part of amateur radio to be experimenting with systems which push a meager amount of rf further. It's my kink. ■

Charles E. Thomas WA3MWM
7022 Blackhawk
Pittsburgh PA 15218

Hey! Wait For Me!

—slowing computers to reading speed

Trying to read game directions on a TV monitor at 1200 baud can be a real rat race!

Ever since I made the 1200 baud rate conversion on my SWTPC 6800, all I hear are complaints from the game players who frequent my computer keyboard. (The conversion was based on a *Kilobaud* article by Jim Huffman, "Speed Up Your 6800," No. 5, May, 1977.)

I think the faster speed actually scares some people away from the keyboard (more than usual). If the player attempts to read the game directions at the 1200 baud rate, he sometimes runs away even before the game begins. The alternative, of course, is to return to the original 300 baud rate supplied by the control board. This makes for very slow drawing of game maps and grids.

If the player is given plenty of time to read the directions before he starts the game, he might stay relaxed enough to enjoy it, so I use a subroutine to develop this needed delay. The routine can be used every few sentences, especially if the directions are rather lengthy. The subroutine, in BASIC, is shown in Fig. 1. The delay routine is found between lines 900 and 920. Be sure your variable character (N in my example) is not used for anything else in the main program. Fig. 2 shows the approximate time delays encountered with my SWTPC 6800 8K BASIC. Now your guests can relax while reading those game directions! ■

```
XXX Last line of directions in your game program
XXX GOSUB 900
XXX Your game program continues . . .

900 FOR N = 1 TO 200
910 NEXT N
920 RETURN
```

Fig. 1. Subroutine delay.

Line #900	**Approximate time delay for my SWTPC 6800 8K BASIC**
N = 1 TO 125	2 seconds
N = 1 TO 200	3 seconds
N = 1 TO 300	4 seconds
N = 1 TO 1000	15 seconds
N = 1 TO 5000	70 seconds

Fig. 2. Time delay values.

Steve Eigsti
2101 Fordham Cove
Austin TX 78723

Morrow's Marvelous Monitor

—reviewing the Morrow front panel

One of the finest, though unheralded, microprocessor boards on the market today is the George Morrow CPU/front panel board, known as the "Sigma 100." It is being sold directly from Morrow's Micro-Stuff or through dealers around the country. Although it is being advertised innocently enough as a replacement front panel for the Altair or Imsai computers, it does far more than any other CPU system currently being offered. The Morrow board also comprises the brains of the Equinox 100 computer system from Parasitic Engineering.

I first discovered the early version of the board in late 1976, when my friend Jay Bell (computer freak of magnitude 9.9) called my attention to a miniscule ad George Morrow was running which offered a computer board at a ridiculous price. I hustled off a check, figuring at the time that, if computers turned out like my ham radio hobby, I would soon have a roomful of blinking LEDs (which I now have).

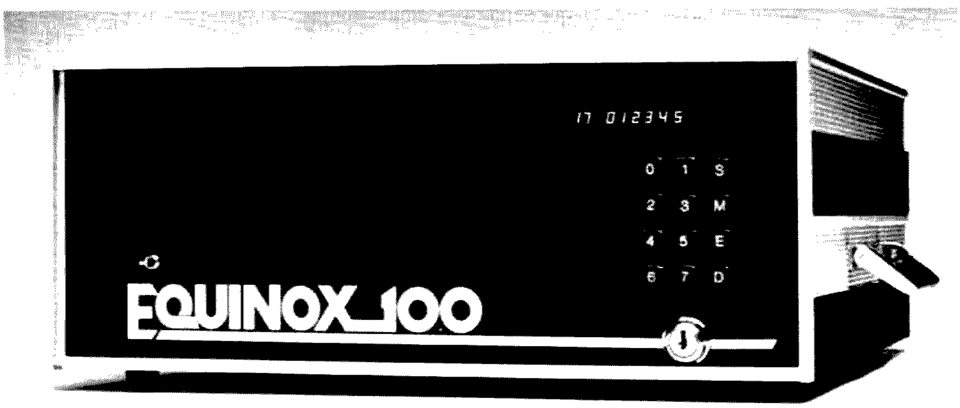

My previous experience in computers was a frustrating FORTRAN course, watching Jay's toggle-switch acrobatics on an Altair, and articles in magazines that I didn't understand. I just plowed ahead and decided to learn as I went. There's a first lesson for beginners here – go ahead, even if you aren't sure that you know what you're doing. This isn't ham radio where you need a license or can mess up an FAA airplane circuit if you misadjust a transmitter.

I received my Morrow CPU board in a week. This is a fully-debugged working production model. There's no waiting months until the company gets into production and works out glitches. This is an important point because you see a lot of neat things advertised which aren't being shipped.

The Morrow board itself is a nicely laid out double-sided job. Assembly is straightforward. Stick sockets in, solder, and it works.

Then comes the problem: What do you do with a computer when you don't know anything about computers? First of all, you need a power supply, case, and mother board with sockets to give the CPU board a home. You can get the works from Parasitic Engineering in their Equinox 100. In addition to what I would best describe as a "moose power supply" (it powers 18 card slots – your money will run out before this power supply will), the Equinox has a specially designed mother board, also from George Morrow.

Next, you need some memory. There's another lesson here for beginners – pick a CPU that is compatible with your friends', or pick friends who have CPUs and mother boards like yours. That way, you can borrow a board or two of memory when you want to run some biggie program that hogs up memory. You can also swap

boards for debugging – at your own risk, of course!

After the memory is in and the power on, you begin tinkering with the keys on the front panel to see what happens. George doesn't swamp you with information, but you do get basic instructions and a little program which makes the seven-segment LEDs count. It helps familiarize you with the operation. The board's operation is so simple that, in about an hour, I had figured out basically what was happening inside the computer. The normal reaction is, "Why aren't all computers designed like this?"

The control of the Morrow panel is set up in a perfectly rational way, so, if you can operate a pocket calculator, you can work a Morrow computer. You don't have to know anything about status lights, memory protect, machine cycles, or nitty-gritty computer design to get going. There's no binary conversion, no flashing lights. The only switch on the board is a "reset" switch, which sort of sends everything back to home when you mess up the program. There are twelve keys for control functions and ten LED seven-segment readouts to tell you what's going on.

How Does It Work?

Basically, the Morrow front panel/CPU works like this: There is a combination hardware-software (called "firmware") which controls operation of the CPU and does all the work supervising the computer operation. In the normal "run" mode, the CPU will go full speed just like anybody else's 8080 CPU. But now comes the neat part. You can execute the program just one step at a time (called "single stepping") or let the front panel step through it at any rate you want (called "slow stepping"). I will discuss this in detail later. You can also put a "halt" instruction in the program, and the front panel program will stop your program so that you can see what happened so far. Then you can continue from that point, at any speed from single step to full run. Normally, when an 8080 CPU reads a "halt" instruction, it stops dead in its tracks, and you have to reset the whole works to get going again. Morrow's "halt" just pauses the program and leaves all the registers, memory, etc., alone, so you can continue from that point on. Now the "halt" instruction is a truly useful programming aid. Programs can be run in sections to help isolate the bugs more easily.

In addition to the regular speed of operation, the Morrow CPU panel has four "modes" of operation at stepping speeds. The firmware program lets your program execute just one step, and then it takes over and displays to you what you want to see. You can select the program counter where you look at the memory location and data, any register or pair, any port location, or watch one memory location. You select whether it will execute just one step at a time or automatically step through your program.

Pressing the "M" key will run the CPU normally, and the front panel will be in control for halts but will not display any data. The CPU simply runs too fast for any practical monitoring of data in this manner. Pressing "S" will stop the program, and the front panel program will be completely in command. Pressing "S" while the front panel program is in operation will single step your program.

Pressing the "0" and then "M" keys is the normal mode which examines each memory location as the program is stepped. The six LED digits on the left tell you what memory location you are seeing – the first location is 000,000 (octal), then 000, 001, etc., on up to 377,377, the last location in memory. The right three digits tell you what is in the memory location displayed. In Fig. 1(a), you see that, at location 000,100, there is a 303, which would be executed as a jump instruction. Since this instruction requires two more bytes following for the address, you can press "E" and the next memory location will be displayed (in the example, 000,101 would be displayed) along with the data in that location. Pressing "E" again will display the next location (000,102) and

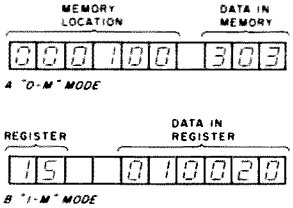

Fig. 1.

so on. To examine any memory location, enter the location and press "E". To deposit new data at any memory location, first examine the location (enter the location and press "E"), then enter the data (which might be an instruction or a data byte), and press "D". If you press "D" again, the same data will be deposited in the next memory location also. It is not necessary to examine each location before depositing data. Each time you deposit data, the memory location will advance to the next location. Thus a long program can be entered in a reasonable amount of time.

The next mode is the register mode. To enter, press the "1" and then "M" keys. Two digits on the left indicate which of the 8080 registers is displayed. The three or six (depending on whether it is a 16-bit pair or an 8-bit register) digits on the right indicate what is in the

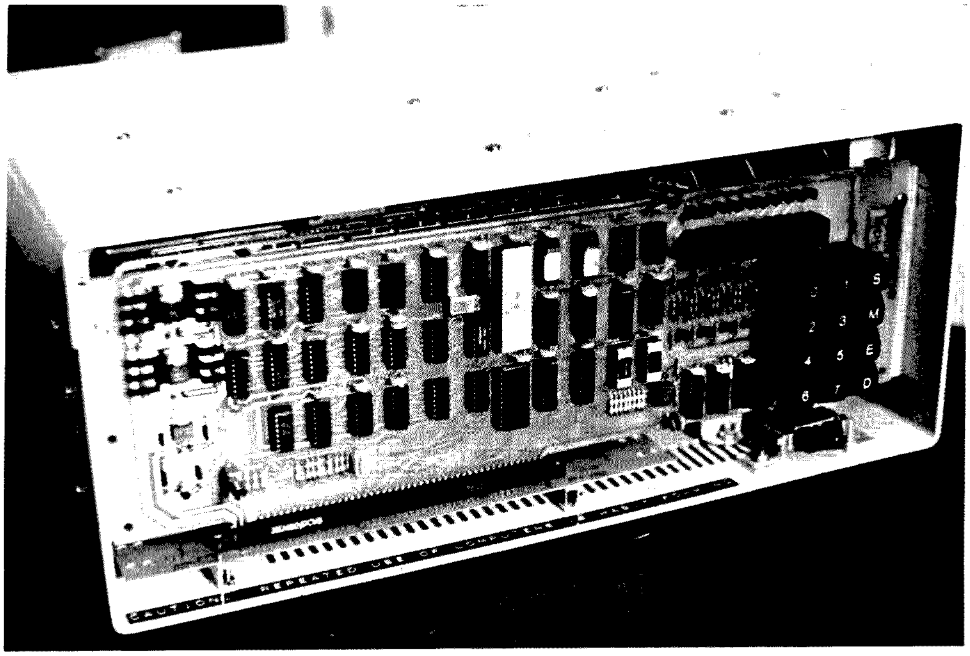

register. In Fig. 1(b), you are looking at register 15, the program counter. The next location that will be executed is 010,020. You can examine a register and deposit data just like the memory locations. As you single or slow step through a program, you can watch a selected register or pair change. This is an extremely valuable tool in debugging programs. In most computers, it takes an elaborate "trace" program to perform this function.

Since the accumulator (register A) is a standard register, you can watch the accumulator in the register mode. If you are building an interface to the outside world (such as a keyboard), this function can be useful in determining whether a problem lies in the interface circuit or in your computer program. If you aren't getting data into the accumulator, the interface circuit isn't working. If data is getting into the accumulator register, your program is at fault.

In another mode, the "2-M" mode, input ports may be examined and data may be outputted. During any part of your program, while the program is halted and the front panel is in control, data may be sent to any port, just as if you had written a section of computer program which moves data to an output port. For example, if you have just built a device connected to the computer's output port which turns on relays and you want to test the relay interface circuits, you would enter the port mode and then examine the port your relays are connected to. By depositing data into that port, you could see if the relays are turned on or not. Again, you can isolate any problems to the computer program, the device interface circuit, or the device itself. As another example, say you've built an analog-to-digital converter board which takes analog values (voltages) and converts them to a digital number. By examining the A/D input port, you can determine if the board is working. By slow stepping a program which inputs the ports, you can watch the values change.

The final mode is the "3-M" mode, which watches a particular memory location. The display looks the same as the "0-M" mode, where the left six digits represent the memory location and the right three represent the data. As the program is stepped through, the memory location will not change in the "3-M" mode, but, if different data is put into the memory location, it will be displayed.

Miscellaneous

By now, you may have noticed that the Morrow front panel/CPU bears a resemblance to the "trainers" which use similar LED schemes and to the new Heath 8080 computer machine. It should be noted that the Morrow board is the only one with a selectable slow-step rate and with the "controlled halt" which does not require a CPU reset and lose all of the program information. The stepping rate of the slow step is determined by entering a value and then pressing "S". Entering "1" and then "S" runs the program very fast – it's good for clearing memory areas quickly – and entering "100" and then "S" will execute your program at about one step per second.

An additional plus for the Morrow board is the S-100 bus. There's complete compatibility with the dozens and dozens of other computer boards on the market. The system is totally upward compatible, meaning that, as you begin to squander more and more money on computers, you can use all that you have purchased so far. You might think that 18 slots in the Equinox computer are a lot, but just wait . . .

It doesn't take long to realize that there's more to a computer than just getting the CPU board and power supply. You need memory and interface boards if you want to communicate with the machine via a keyboard and look at the results on a TV screen. That translates into money. Fortunately, the Morrow board allows you to use all ten LED readouts and eleven of the keys as input/output ports. When the firmware program is not using them, i.e., when the "M" key is pressed and the CPU is going full blast, you can display any segments of the readouts and input information from the keys. The "S" key is not usable, however, since pressing it anytime stops your programming. You cannot use the readouts or keys during any slow-step mode, since they are dedicated to the firmware program at this time. Still, the keys and readouts do provide at least something. You can devise a frequency counter and use the readouts for frequency display, write a clock program which keeps time (none of this $9.95 stuff), or put input data into the readouts to give you a visual indicator that data is being received.

The LED displays are simply memory locations beginning at 377,000. The eight data lines drive each segment of an LED. By depositing a 117 octal, the segments forming a "3" will turn on. With help from Morrow's instructions, you can easily make the readouts count. Remember that, when the front panel program takes over, all the information in the LEDs is lost, so the information needs to be stored at another location.

The keypad is I/O ports 376 and 377. As a key is pressed, a latch is set so that you can input any data combinations from the keys. It's a

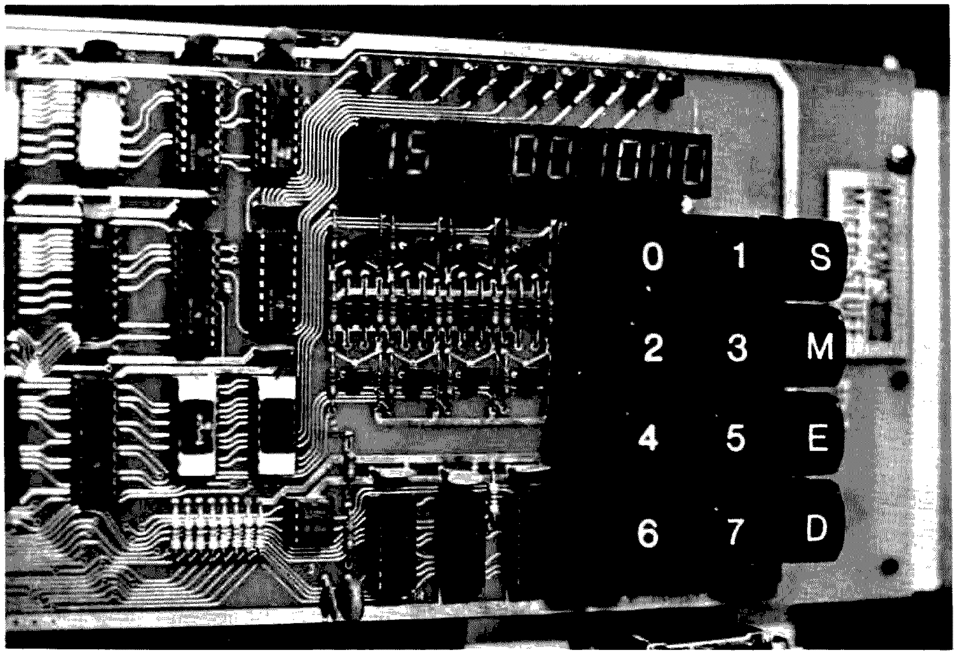

little bit cumbersome but still better than toggle switches.

In Conclusion

Now that you've looked at some of the features of the Morrow CPU board, I will briefly describe several applications for which this computer is ideally suited. The first, and most obvious, is the educational value of seeing what is going on inside a computer as the program is running. Students can easily enter machine language programs (in octal) and then run and debug the programs. As the student becomes more and more proficient, additional boards – memory, analog/digital, interface, etc. – can be plugged in to make the system more sophisticated. I have found that, within the educational realm, the Morrow board is uniquely suited for students to learn computer control applications, beginning with simple programs for simple control applications and progressing into more and more complicated programs. Since data can be read from the LED displays and program parameters changed through the front panel keys, external displays such as CRTs need not be used. This is particularly nice if the computer is going to be used in a laboratory situation, such as machine control, where heat or vibration might cause a TV screen some problems.

George Morrow, in his design of this CPU/front panel board, has pretty well covered all bases – a simple-to-operate board for beginners, a sophisticated supervisory-control firmware program for programming and debugging, and complete compatibility with the currently popular S-100 bus structure. Parasitic Engineering, with the rugged power supply and cabinet to house the Morrow board, provides the complementary components for the base for any degree of sophistication. ■

Enjoy All Bands With A Remote Tuner

—motorized marvel

Herbert M. Rosenthal KL7AE
2941 Brandywine
Anchorage AK 99502

This article describes an "L" network tuner for matching the nominal 50-Ohm impedance of the modern transmitter to a random-length longwire antenna, primarily for 80 and 40, but also useful for all the bands. The unusual feature of this tuner is that it is mounted up on the tower and is fed with coax and a control cable. The advantage of this system is that high-impedance rf is kept where it belongs — up in the air and out of the shack! Open wire feeders seem to be a thing of the past, and bringing one end of a longwire into the shack to one of the modern day matchbox-type couplers is one way to skin the cat, but not without bringing the radiating element — one end of the antenna — into areas conducive to TVI, RFI, etc. The coupler I will describe has been in use since 1972 (first in Kansas as WØOC and then for two winters here in Alaska). It has survived below-zero weather, intense rain, and very high winds.

A remote control panel at the operating position permits separate adjustments of the rotary inductor and the large transmitting capacitor. My control also allows me to read the relative position of the L and the C so that a chart may be drawn with arbitrary meter settings (0-100) for each band in increments (25 kHz) for presetting the tuner. The control works in conjunction with an external directional wattmeter. Simply adjust the L and C for minimum reflected power and retune in the forward position for each setting. Having once made the chart, it is unnecessary to use the wattmeter each time. So you could borrow a wattmeter to calibrate your tuner once and then use the chart. There is some minimal seasonal change in the setting, but this is not important. One may adjust for a zero reflected power setting for any frequency with an antenna of any reasonable length, horizontal, vertical, or a combination. I'd guess anything much over 50 feet would do. My present antenna is about 300 feet long and works fine. The one in Kansas was almost 500 feet long.

Naturally, a good ground is required; the better the ground, the better the tuner works. I buried a few long ground rods in the base of the tower before the concrete was poured. Since the unit bolts to the tower, a good ground will be had if your tower is well grounded. You might consider cutting some radials into your lawn with a flat-bladed ice chopper. The slits will self-seal in a short time.

Circuit Description

The inductor is a Johnson 229-203 28 uH rotary inductor of some 30 turns. The capacitor is a Johnson 154-10, 347 pF, 3 kV unit. Both of these items are available from Whitehouse, as are couplers (Millen 39002), miscellaneous porcelain standoffs, panel bushings, and feedthrough insulators. Motors, microswitches, relays, and the components for the control panel are best obtained from Allied Electronics. I had most of the "stuff" in my junk box. Some of it, like the Bodine gear head motors and 4PDT pushbuttons, is either no longer available or is now outrageously expensive. But a turn through the Whitehouse and Allied catalogs shows that just about everything can still be obtained new and at a total price of about $150 plus the cost of a waterproof metal box to house the unit. Using the L and C described, you can safely run 2 kW PEP.

The L and C occupy a compartment within the enclosure. Nothing else is in this compartment, to minimize coupling rf into the control circuitry, where it would certainly find its way back into the shack. A second compartment houses the motors, relays, limit switches, and tracking pots. Finally, there is a panel with a barrier strip for the control cable and a bulkhead connector for the RG-8/U. The enclosure has two flat strips of metal, each drilled for 2 U-bolts to hold everything on the tower at

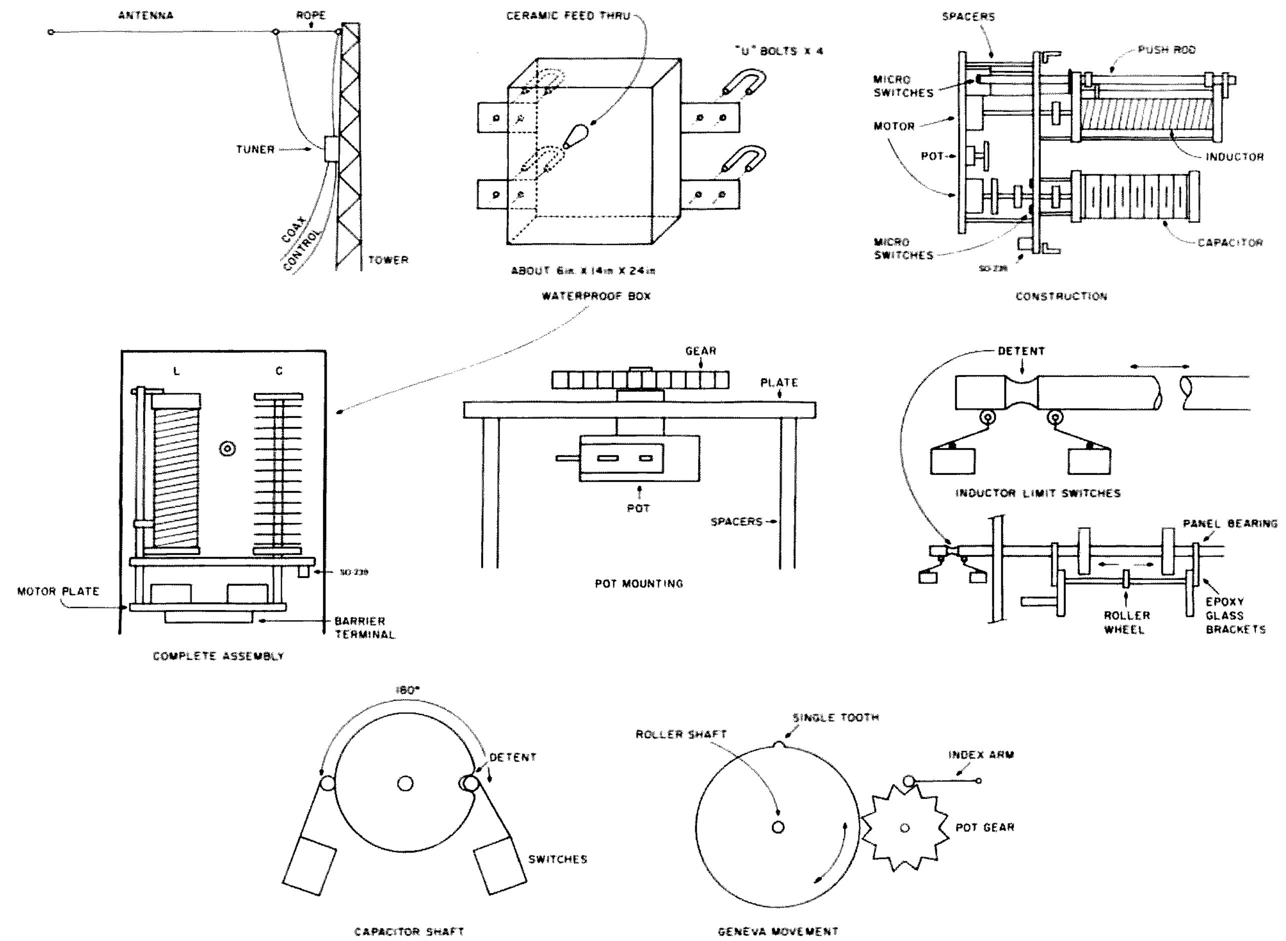

Fig. 1.

whatever level you wish. Mine is about 45 feet up, which gives the antenna an inverted "L" shape from the top of the tower down to the feed-through, which extends out of the rf compartment. Incidentally, I use the double-pulley method to support the longwire. I have a pulley at the top of the tower and a continuous loop of 3/8" plastic line through this and the base of the tower. This line in turn raises a second pulley to the top, where a second line goes out to the antenna wire. In this manner, if the antenna wire breaks, I simply lower the whole mess and start over without climbing the tower.

Each motor is a reversible 120 V ac motor (Hurst, about $20 each). One with an output of 30 rpm is ideal for the inductor, and one with a 4 rpm output is ideal for the capacitor. Limit switches (small microswitches with rollers on arms) sense the end of the roller (each way) or the max./min. of the capacitor's rotation. Thus, when the inductor reaches near maximum inductance, the motor is automatically disconnected, and the operator must reverse the control signal to effect movement in the opposite direction. The remote console readout is accomplished by a 1 mil meter, a dc supply, and 5k wirewound pots which track each motor. Obviously, a simple gear or pulley and belt system may be used for the capacitor and its pot which only turn ½ revolution (min. to max. capacity). You could even use different diameter gears (I did) so that the ½ revolution of the capacitor turns the pot 3/4 turn to give a nice movement to the 1 mil meter in the control unit. The belt drive is second best, for belts slip and harden in very cold weather. Of course, not everyone has gears from old Command sets or bombsights, but they are still available through Boston Gear. All shafting is ¼ inch.

To get back to the 30-turn roller inductor, how do you track the pot for this? Simple – use a Geneva movement, a gear with one tooth on the motor shaft which meshes with a normal gear on the pot. With each turn of the roller, the pot moves one tooth's equivalent rotation. At the control panel you see the meter move, pause, move, etc. Since there is nothing to keep this pot from "free wheeling" when the single tooth is not engaged, simply add an index tension arm of slight springiness, with a roller or vee bent into it, to fall in place each time the pot moves one tooth either way. It works.

Next, how do you know when the roller is at either of its limits? To keep the control circuitry out of the rf compartment, use a ¼" push-rod, made of laminated fiber, held in place with ¼" panel bushings at each end of the coil with two epoxy glass blocks positioned along the rod with setscrews. As the roller contact wheel gets to its limit, it moves the rod in and out through a panel bearing. Outside the rf compartment, mount the roller limit switches perpendicular to the panel on a bracket, and spring load the rod centered between switches. Now when the pushrod moves either way at limit, the respective switch sees a dent in the rod and actuates. Drill the mounting holes for the switches a bit

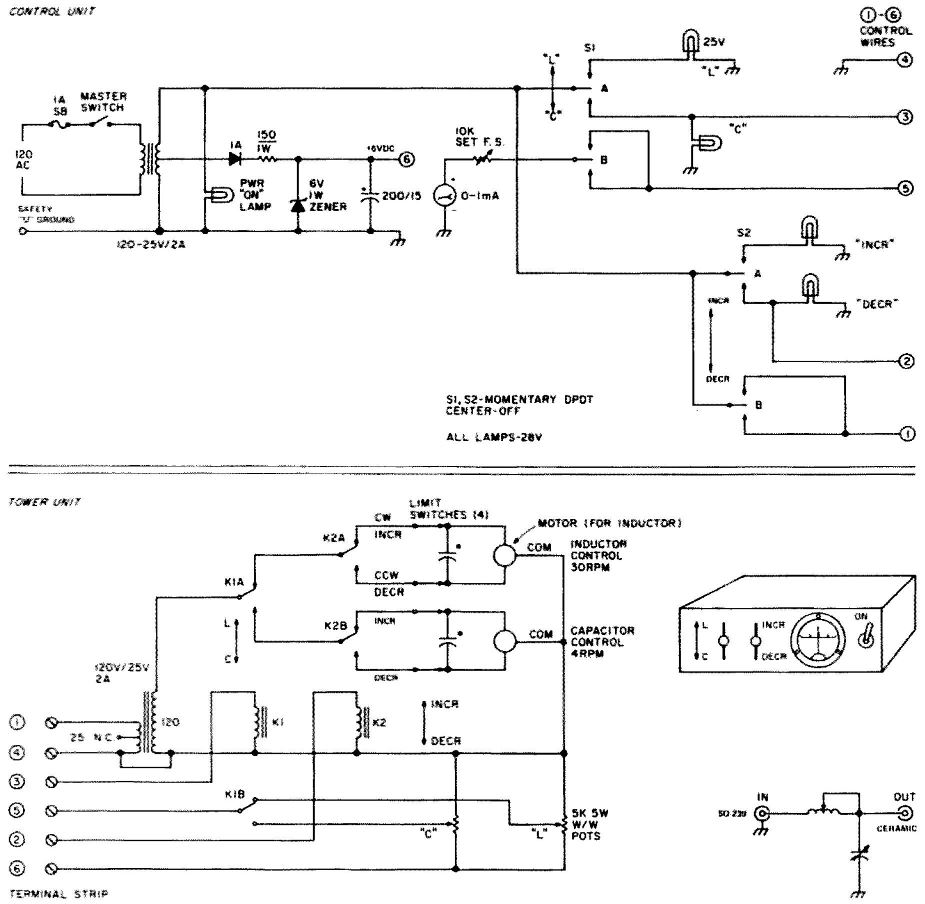

*Fig. 2. K1 = L or C; K2 = Incr. or Decr. *Motor-reversing capacitors (furnished with motors).*

large and you can correctly set the limit switches the first time. Remember to use a strong fiber rod — Plexiglas™ may snap after a while. The limit switches for the capacitor are easier to activate. A simple wheel around the capacitor shaft with one detent actuates the switches at each limit.

Note in the schematic that two 25-volt, 2-Amp transformers are used back to back. The reason for this is simply to keep the control voltage down to the 25 V and eliminate the hazard of having the 120 V on the tower. The low voltage is also used to control two relays in the tower unit. These relays, in turn, reduce the number of wires in the cable and permit a single transformer (step-up) to be used in the remote unit. Half of the low voltage is used in a half-wave dc supply (zener regulated to 6 V) which operates the meter circuit. Two momentary lever switches (center off) and as many pilot lights as you fancy complete the control unit. One lever switch is labeled "L" and "C", the other "INC" and "DEC." Operating just the first switch gives you either meter reading, while using both switches changes the particular element setting. There is a master on-off switch which you can eliminate if you can find lever switches or push-buttons with enough sections so that one section on each can be dedicated to this master switch function. There is a single pot in the meter circuit which adjusts the meter swing to full scale. Note that one section of the L/C relay selects the proper remote pot.

Construction

The rotary coil and capacitor are mounted on ceramic standoffs on a 1/8" aluminum plate about 6" x 14". Panel bushings (¼) and insulated couplings (Millen) are used. An SO-239 is mounted at one end of the panel. All internal rf connections are made with 3/8" wide copper strips, including the lead to the output feedthrough. The inside portion of this insulator is assembled and pulled through the outside wall of the watertight box with a fishwire at final assembly. The outer cone of the insulator and its hardware are then installed.

To the first plate is affixed a second plate of 1/8" aluminum, the same width but only 11" long, to permit access to the SO-239. This second plate is affixed with bolts and spacers cut from 3/8" copper tubing about 3" long. To this second plate are mounted the motors, pots, relays, etc. The limit switches for the capacitor are placed on the outside of the first plate. As described before, the pushrod and microswitches for the inductor are mounted on a bracket. The barrier strip for the control cable goes on the outside of the second plate. Scraps of angle bracket are affixed to both plates, with holes for self-tapping screws. Now everything is slid into the watertight box, held in with self-tapping screws which have some RTV or other goop smeared over their heads, and the unit is ready to install. It ends up with the L and C pointing up and the barrier strip on the bottom, recessed some 4" up into the box. The bottom of the box facing the ground is open. My box is made of 18-gauge galvanized sheet metal, fastened with screws and sweat-soldered with a torch and acid core solder. It was then neutralized with baking soda and water, dried, and primed with spray zinc chromate. It's been up a few years and, probably, I should climb up with a tube of RTV and a can of primer . . . next year.

Construction of the control unit is left up to you. You would probably use a small cabinet and panel to match your rig and a meter, switches, lamps, etc., to suit your taste.

That's it. I think a guy can scrounge quite a bit from friendly junk box owners. Radio Shack has some of the goodies you'll need for the control. Quite a few World War II rigs used rotary inductors, and there are a million TX caps floating around, but I'd recommend going the Whitehouse route (and Allied), if you can afford it.

There's no reason why a guy couldn't hide this up in the attic, get onto a metal vent pipe for a ground, and simply hang up as much wire as he could. This tuner would get him on the air with a respectable signal. ■

New Use For CB Antennas

—converting 'em for ham use

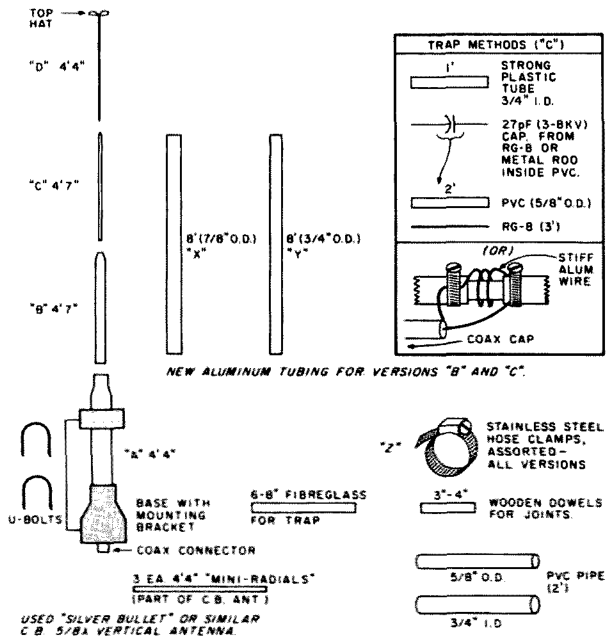

Fig. 1. As can be seen, a minimum of extra hardware (only a few hose clamps in two cases) is required, and yet a number of quite useful commercial-quality antennas can be constructed. The hose clamps must be stainless steel. Also, avoid overtightening unless wooden dowels are inserted into the smaller tube of a joint. The original joints are not as good as they could be, which is why you need the clamps and dowels.

Karl Schulte WA2KBZ/JY9KS
223 Firestone Drive
Hoffman Estates IL 60195

Have you ever wanted a cheap but effective commercial-quality antenna? Do you live in an area without any handy trees to hold up a wire? Perhaps you're a converted CBer and are wondering what to do with that "good buddy" antenna up on the roof. Even the lucky op with forty acres and rhombics for each compass direction may find this set of antennas both useful and interesting.

In order to convert a CB antenna, you first have to find one. I have seen various suitable types for sale through local classified ads and from disgruntled CBers. I purchased my antenna from the local Montgomery Ward for only $16.00, as it had one small (and useless) piece missing. It was either a Hy-Gain "Silver Bullet" or a very similar ½ λ model. Almost any of the many models and makes in use are suitable for these modifications or adaptations of them.

Four variations are shown in the sketches in Figs. 1 through 7, together with several suggestions for possible mounting and grounding methods for the average home lot. Two of the antennas, variants A and B (Figs. 2 and 3), need no additional parts except for the recommended stainless steel hose clamps. These are required in order to provide stronger joints than those used in the original. The other two versions require only two standard sections of aluminum tubing from your local hardware store, plus a couple of short pieces of coax, PVC tubing, and some wire.

Here are instructions for each type, variants A through D, with a summary of the features of each, together with sketches and construction notes. There are two methods shown for constructing the trap for the 10-40 meter antenna. Although I have not tried it, the one using a dowel on the inside, PVC pipe outside, and the coaxial capacitor is not the

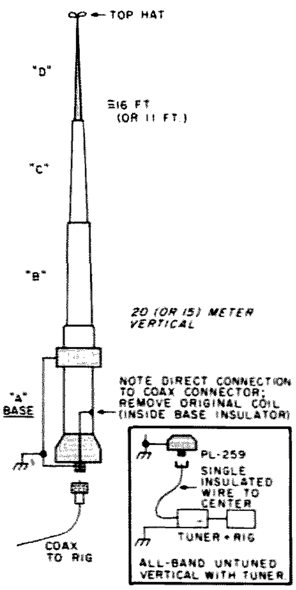

Fig. 2. Variant A — 20 meter (or 15m) ¼ λ vertical.

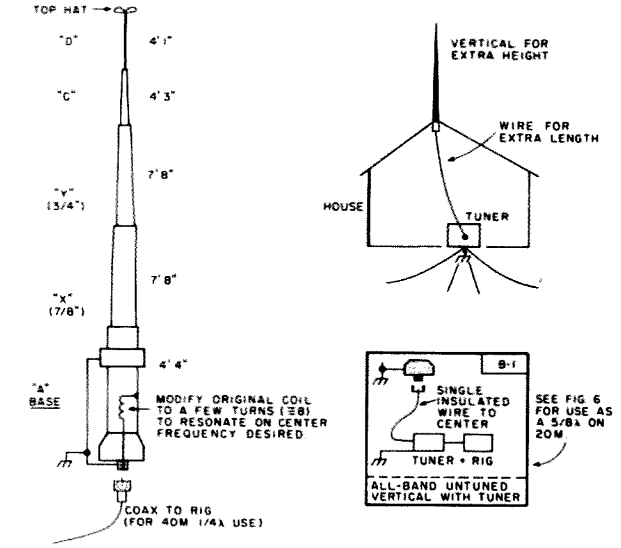

Fig. 3. Variant B — 40 meter (or tuned) vertical.

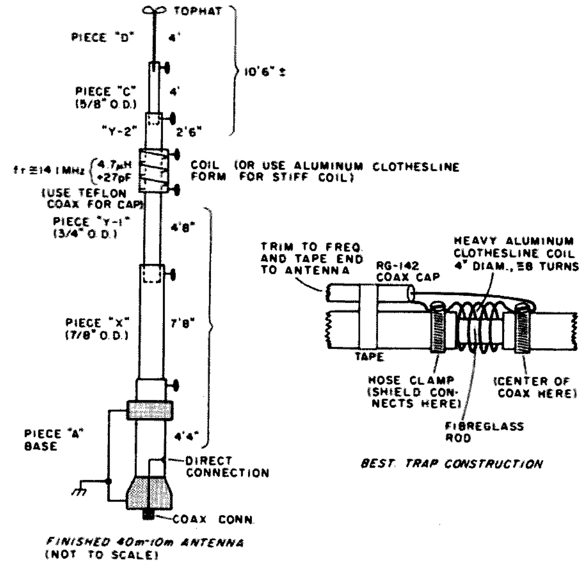

Fig. 4. Variant C — 10 to 40 meter trap vertical.

stronger of the two. I just happened to have a heavy fiberglass rod the right size to construct a trap by the other method. Each model has been tried and works quite well.

So pick the one that you like best, and remember that these ideas can apply to a complete homemade model, too, although without as easy a base mount. Finally, don't forget the ground rod and radials for good performance.

Variant A

This is a 20 meter (or 15 meter) quarter-wave vertical antenna. (See Fig. 2.) By sliding the tubing together and clamping it, you can shorten the antenna to 11 feet or to 16 feet (±). Replace the base coil inside the insulator with a direct connection. Modify the tubing to utilize the slot-and-clamp method for greater strength. No extra materials are required except clamps. The original radials are not used, but heavy wire (#12-14) quarter-wave ± 5% insulated radials are a must, together with a good ground at the base. The support pipe, if used, can be 8' or more to provide a fair ground, but it should be supplemented with several small rods wired together. See the ground and radial suggestions in Fig. 6.

Variant B

This is a 40 meter (or tuned) vertical antenna. (See Fig. 3.) The useful height is 28' with the top hat capacitive loading; only a few turns of #12 insulated wire in the base insulator (where the original coil was) will resonate at 7.1 MHz. The entire band will be covered. Use a good ground plus radial wires for best efficiency. This will also work on a portion of the 15m band as a three-quarter wave vertical. Note that if you only want to use a vertical radiator with a tuner, make a connection with a single insulated wire to the center of a PL-259. Using a

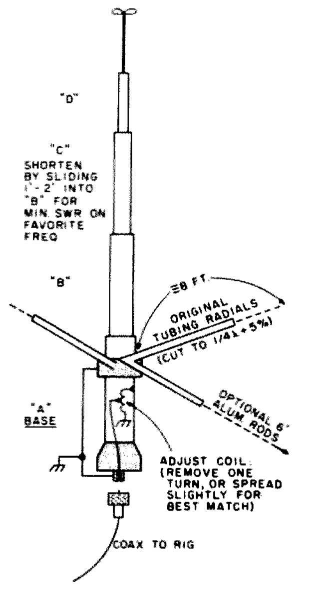

Fig. 5. Variant D — 10 meter ½ λ vertical.

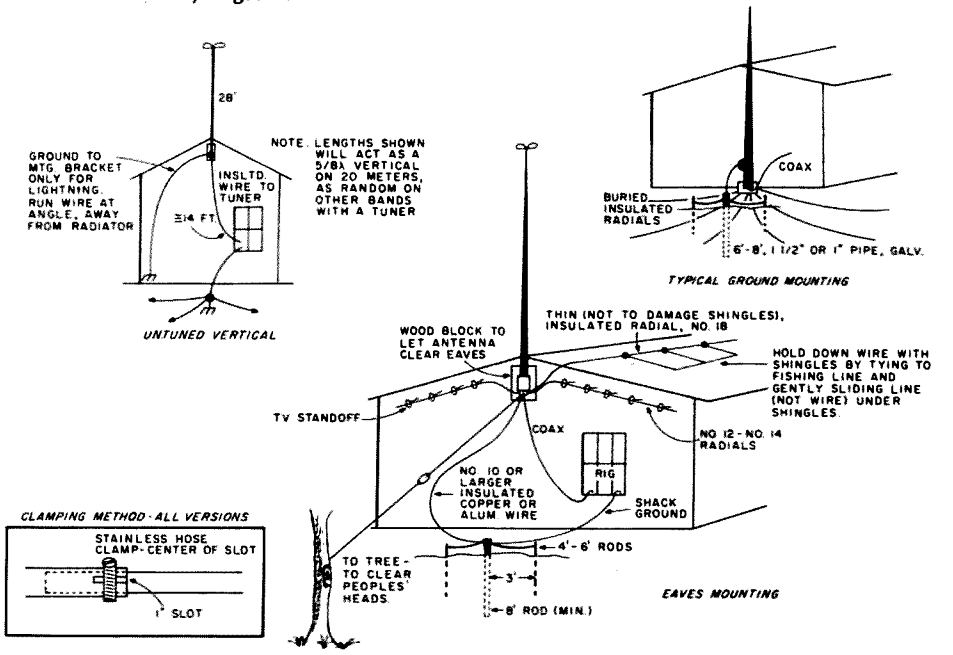

Fig. 6. Installation suggestions.

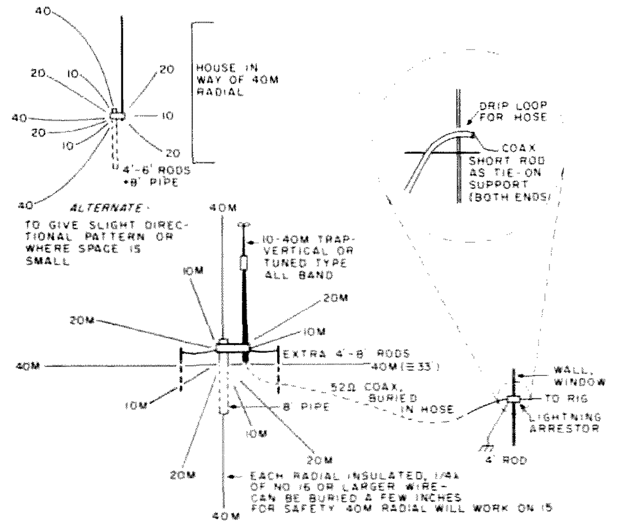

Fig. 7. Variant C — suggested radial pattern. This will provide efficient operation on each band. A small amount of directivity at low angles will be obtained by the pattern in the upper-left corner.

roof (or eaves) mounting, run wire (through a feedthrough insulator) to the tuner (with a ground system). The extra length will be more efficient on 80 or 160m, and the vertical will allow some extra height over the usual suburban long wire.

Variant C

This is a 10 to 40 meter trap vertical antenna. (See Fig. 4.) Use the original base and the top two sections (C and D). Add the two new 8' tubes (X and Y). Cut off Y at 2' 9" from one end. The trap will be inserted between the two parts of Y. For instructions for making the trap, see Fig. 4. The original radials may be used, if you wish, but they will have little effect on bands below 10 meters. Even on 10, they are not long enough. See variant D for an idea for lengthening them for 10m.

This antenna will work on all bands from 10 through 40 meters but with a little less bandwidth than the other version. Since the trap requires only a small inductance, the bandwidth reduction is not large. My model works over 350 kHz on 40, all of 20, all the CW end of 15, and 1 MHz of 10 with an swr between 1.3 and 2. Only enough "L" is needed to resonate the coil at 14.0 MHz. The values shown are what my unit needed. Fine tune the lengths. Note that 40, 20, and 10 meter operation is easiest, but a little extra fudging with L/C will bring in 15m, too. Use a grip-dip meter with a small loop of wire at the base of the antenna to guide in adjustments.

Variant D

This is a 10 meter half-wave vertical antenna. (See Fig. 5.) By slightly shortening the original 11 meter antenna and tweaking the base matching coil, this version results. The original tubing radials are retained. Most of 10 meters will be covered, with 2 to 3 dB gain. This is the easiest conversion of all.

A helpful suggestion: The radials, as supplied, are not quarter wave and serve mainly to decouple the coax shield. By inserting and adjusting aluminum rods, true quarter-wave radials can be had. This will improve the efficiency and lower the radiation angle. A ground rod is still desirable for safety and to reduce loss. ■

Albert F. Lee, M.D. KH6HDM
204 Makee Road
Honolulu HI 97815

Confessions Of A Vertical Fanatic

—careful, he's looking for converts

The vertical antenna should be well appreciated as a ham antenna, as it is truly a sleeper. This antenna is great for DX, is compact and simple, and it can give a good accounting of itself even under less-than-ideal conditions.

As a demonstration, the "Quick 'N Easy 15 or 20 Meter Vertical," as described in *73* in February, 1974, is a fine starting point. For 15 meters, an 11-foot aluminum rod (or for 20 meters, a 16-foot aluminum rod) is installed by setting it in a pop bottle. Even as few as one or two isolated radials cut to the same length as the upright will surprise you with their performance. I daily worked KH6HGJ and KH6HHD from the San Francisco area with only 100 Watts and a 5 by 9 report. This 20 meter rod was only two feet from the porch and the house, and the top was steadied with a broom stick.

All of this makes one wonder what I could have done if I had found a clear, open spot with a 360-degree ground system. This was not possible, but the makeshift setup worked. You can't beat success.

My next note on the vertical concerns the ground system. A little experimentation will show that the ground radials which perform the best on receiving and transmitting are those which are elevated and insulated at the ends. With these same radials lying on or beneath the ground, the swr is elevated, and the receiving signal is less in volume. Following this, one can check four rods driven into the earth at 90 degree angles, and here find

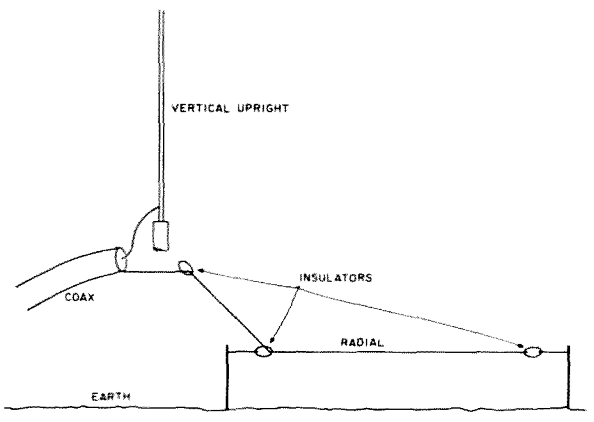

Fig. 1. Radial angle at vertical base to bring impedance to 50 Ohms.

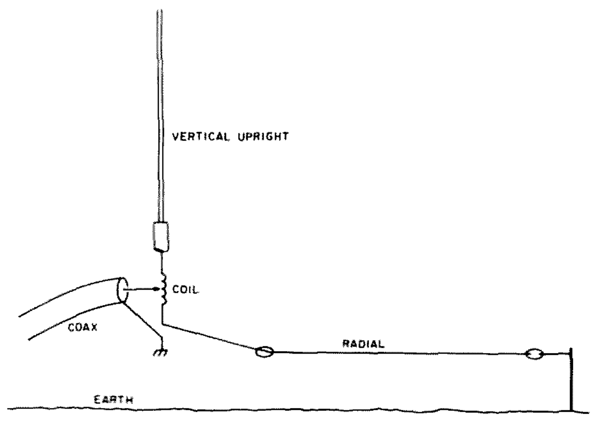

Fig. 2. Tap method used to bring impedance to 50 Ohms on a vertical antenna.

the least-desired function. Lastly, trying with no radials, as I have heard a few operators do, is nearly worthless. Were I pressured into such a situation, I would use the vertical as a long wire and use a ground with a long-wire tuner in the shack, which will do a good job.

Recently I learned from George Onsum W7IC about his technique of using wound coils in his 75-80 meter radials, and I've tried it. It works.

The vertical makes a grand showing as a mobile antenna for the auto, motor home, trailer, and particularly for marine work. Use of the vertical over salt water, using the water as ground, is a fine way to go. As a practical matter, the compact vertical is pretty close to the only antenna for such mobile and marine use.

Another note on the advantages of the vertical might be made about the fact that the resonant frequency and impedance adjustments on such an antenna may be handily made from the ground without climbing towers.

Some will say that the vertical is nondirectional and has less gain than a yagi. It is also true that a vertical will pick up a greater number of man-made noises from rotating machines, generators, motors, ignitions, and home appliances.

Despite these factors, the vertical which is in the clear, free of buildings, trees, scrubs, and nearby metal obstructions, will, with a good ground, do a grand job.

For instance, I visited a ham who had a vertical next to his house, completely hidden by an evergreen tree. He had neighbor problems. His ground was the house water pipe. He worked locally and at great distances, and the neighbor is now quiet.

Here in Hawaii, where seventy-five percent of the homes are on leased land, the ham antenna can be a problem. The lawyers have written in every restriction known to man. In one ritzy neighborhood where no type of antenna is allowed, I talked to a chap who tipped over a commercial vertical in his attic with which he worked the world.

Now, here's a note about impedance in the vertical. If the radial system is brought off at 90 degrees from the base, the impedance will read from 25 to 30 Ohms. To bring this to a 50-Ohm usable range, there are two easy methods to use. The first, as shown in Fig. 1, brings the radial off the upright at an angle and then straight out. The second technique, as shown in Fig. 2, uses the tap method. This is used by commercial manufacturers, and is my preference.

Another note on verticals is that the best technique for finding the resonant frequency and impedance is the grid-dip meter/antenna bridge setup. With good readings on these two instruments, the swrs will be low. In mobile situations, I use the swr meter for adjustments.

Verticals have been made with a large assortment of things. One can use water pipe, irrigation pipe, downspout stock, beer cans, copper tubing, coax, clothesline poles, ham towers, aluminum tubing, stainless steel tubing, and wire of every description. I recently was interested to read of a vertical made with an aluminum ladder.

One afternoon last year, the strongest 20 meter signal on the band was a retired chap who phased two commercial verticals using the aluminum skin of his trailer as ground. Here, in a final note on verticals, we open a whole new bag of worms.

What notes do you have? ■

Reference

1. Al Lee KH6HDM, "Quick 'N Easy 15 or 20 Meter Vertical," *73*, February, 1974, pages 37-39.

Jerrold Swank W8HXR
657 Willabar Drive
Washington Court House OH 43160

Novice Guide To Phased Antennas

—part I

An Indian once came into an automobile salesroom, the story goes, and asked about a car which drew his fancy.

"Where do you put the horse?" he asked. The salesman said that no horse was needed and proceeded to give him a very complete explanation of how the internal combustion engine works. The Indian listened closely and frequently nodded his head, so the salesman asked, "Now do you understand how the automobile works?" "Yes," replied the Indian, "but I still don't see where you put the horse."

Then there is the little girl who was given a book to review for her school homework. She wrote the following: "This book told me more about penguins than I cared to know."

This is the way I feel about most of the articles and books I have read on phased antennas. I just purchased a book on vertical antennas. It was a complete work on how to figure out the radiation angles and the various patterns and had page after page of higher mathematics. It even suggested that it would be better to use a computer.

Since I had no computer and only had a roll of wire and some tools, the book was a total loss.

Actually, phasing antennas is extremely simple, if you only want to put up a pair of phased antennas which will give the maximum results with a minimum of mathematics. If you don't care how phasing works, just ignore the drawings I have included. I felt that there would be a few who would like to know how it works without caring for anything more than a simple understanding. I have also included a page of patterns possible with phased antennas, but only to show that phasing is not only uncritical, but also that there is no point in knowing more than the most simple and easily understood patterns. The small difference is not worthwhile.

The main considerations are: How much space do you have, and which direction do you want the antennas to cover? There is the additional factor of: What, if any, do you want to reject in the way of noise or other signals?

I will also give some ground radial information for those who are using ground-mounted verticals. Even the poorest ground will not affect the phasing

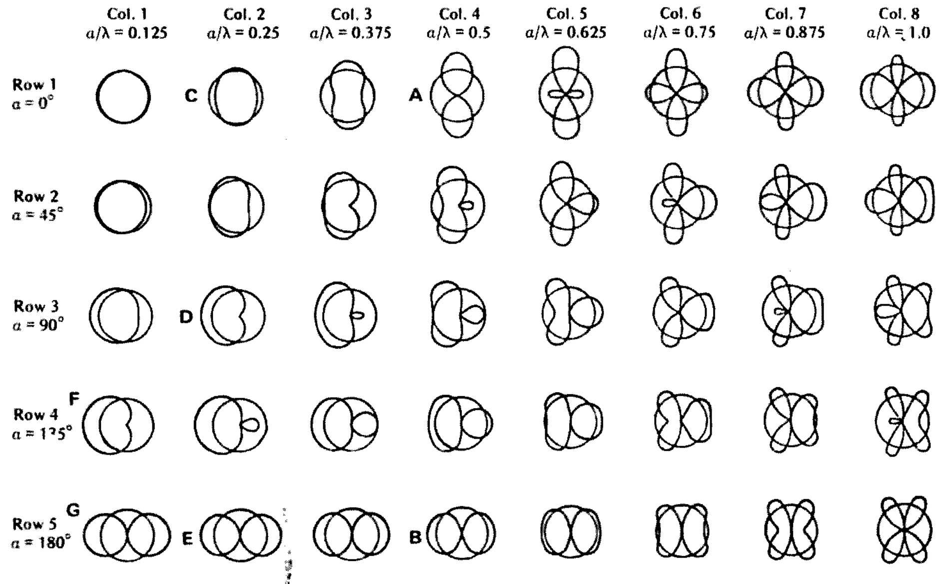

Fig. 1. Variations of patterns available with two towers.

appreciably.

I have never used radials for ground-mounted verticals, but only a pattern of five ground rods, as shown in Fig. 4. My ground is moist clay, so I know that, if it were sand, I would need more.

I am not a gain nut, and I feel that, if I get into Antarctica with a 20-over-nine signal, I won't spend much time worrying whether I get into Antarctica with 17 over 9 or 23 over nine. The main thing is that I get there.

The other consideration is: Can I cut out noise and interfering signals so I can copy them at all?

Several years ago, I wondered how a roof-mounted single ground plane would compare with the phased array. I put one up and tried it out. This was on 40 meters at night.

On the single ground plane, I received a screaming mass of signals from every direction. The signals from KC4USN, now KC4AAA, at the South Pole, were unreadable in this noisy situation. But, when I switched to the phased array on the ground, there was the South Pole coming through clear and strong, and the rest of the band had quieted down remarkably.

I was using a pair of verticals spaced 66 feet and fed with equal lengths of coax. The antennas were east and west, and the broadside pattern was that of the fourth pattern in the first row, marked A (see Fig. 1). I should have spaced the antennas 68 feet, the free space distance, but I forgot and used 66 feet. However, the difference was not noticeable. I have even used 54 feet, but the rejection was not quite as good, as it was more like pattern number 3, though a little better.

The width of the pattern between half power points is only 60°, and the rejection at the side is around 30 dB average.

At one time during my twelve years of handling Antarctic traffic, I worked at 7.290 MHz after Radio Moscow signed off, at 0700 GMT, and, at the same time, Johnston Island was handling phone patch traffic on the same frequency with California. If I switched my antennas east/west, they were S9. But, when I was north/south, I could not hear them, they could not hear me, and neither station could hear South Pole Station, as they were using beams. We worked like this through the entire season.

This half-wave arrangement is the easiest to set up and the easiest to match. If you will make the lines to the antennas equal, the pattern will be broadside at right angles to the line of the antennas and will be the pattern marked A. If you are using 14AVQ antennas, with a 50-Ohm impedance, the paralleled lines will be 25 Ohms. This will give an swr of 2:1. If you feel that this is too high, there is an easy way to fix that. In the line from each antenna, add a

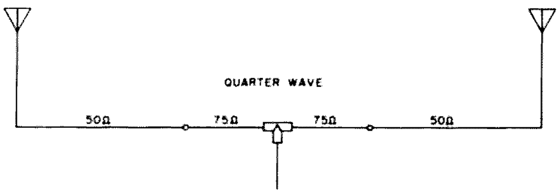

Fig. 2.

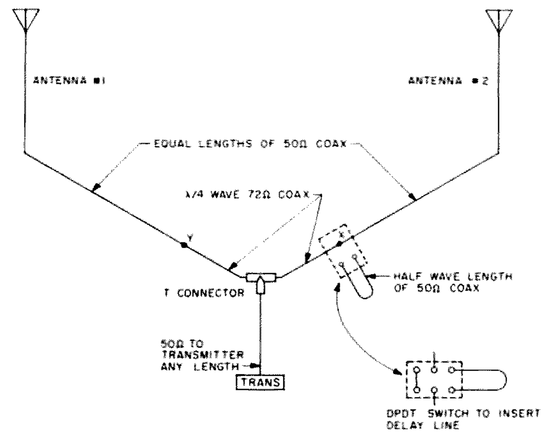

Fig. 3.

quarter wavelength of 72-Ohm coax, such as RG-59. This will raise the impedance of the line to 100 Ohms, and, when they are paralleled, the result will be 50 Ohms and the swr will be 1:1. If you use a tuner, there will be no point in adding the 75-Ohm line.

If you use an antenna such as the 4BTV (or a homemade one) which has no matching coil in the base, then the impedance will be about 36 Ohms, and adding the quarter-wave RG-59 will be of more value. This will raise the impedance in each line to 72 Ohms, and the swr then will be 1:1.44. However, again, if you use a tuner, you won't need the matching sections.

On 40 meters, the matching sections will be 22'6" at 7.200 MHz. This is (246/7.2) x .66, corrected for the velocity factor of polyethylene line.

Fig. 3 shows how the lines are connected. Inserting a half wavelength of 50-Ohm line at point X will delay the signal 180° and change the pattern to pattern B, the fourth pattern from the left in the bottom row. This will be end fire in the direction of the line of the two antennas.

One more point should be made here: If you use any pair of antennas which are not identical, the pat-

					Polyethelene (.66) coax			
Band	*Antenna		Spacing		45°	90°	135°	180°
	λ/4	λ/8	λ/4	λ/2	1/8 λ	1/4 λ	3/8 λ	1/2 λ
80 meters								
3.9 MHz	60'	31'6"	63'	126'	20'10"	41'7"	62'7"	83'4"
40 meters								
7.2 MHz	32'6"	17'1"	34'2"	68'4"	11'3"	22'7"	33'11"	45'2"
20 meters								
14.2 MHz	16'6"	8'8"	17'4"	34'8"	5'8"	11'5"	17'2"	22'11"
15 meters								
21.3 MHz	11'	5'9"	11'6"	23'1"	3'10"	7'7"	11'5"	15'3"

*Table 1. Dimensions for phased antennas. *Quarter-wave verticals or half of a dipole.*

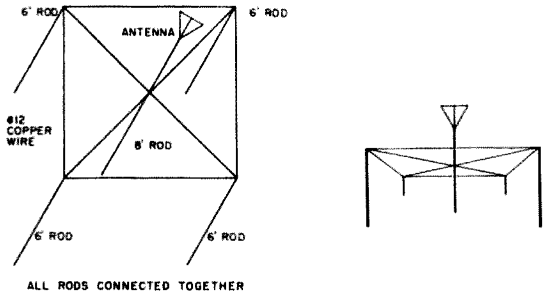

Fig. 4(a). All rods connected together. If ground rods are used instead of radials, install them as per Fig. 4(c).

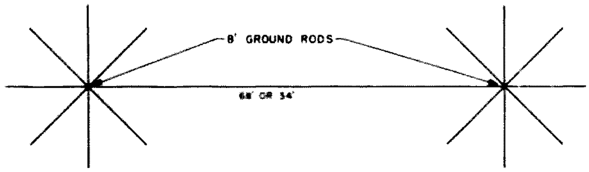

Fig. 4(b). Radial ground system (8 shown) illustrating interconnection of towers.

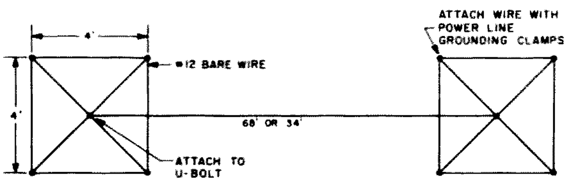

Fig. 4(c). Ground system utilizing four 6-foot ground rods (illustrating proper connection of rods).

terns may not be the same. For example, if you should use a 14AVQ with an older 14AVS or with a 4BTV, which does not have a coil in the base, or a home brew type, this will be 180° out of phase, and the pattern will be end fire when the lines are equal. The reason is that the coil in the base of the 14AVQ changes the phase of the antenna 180°. In this case, you will need to add a half-wave section at point X to get a broadside pattern.

This is no great problem with half-wave spacing. Quarter-wave spacing will cause problems. You can make everything simpler if both antennas are identical.

The closer the electrical lengths of the lines, the deeper the nulls at the sides of the pattern, but, in general, the lengths are not critical. If you use new coax, you will have no trouble if you simply measure with a tape measure. It is not necessary to use impedance measurements.

One thing worth knowing is that the best results are obtained when the swrs on the two antennas are the same. I have had occasion to adjust one antenna or the other to compensate for nearby trees or metal objects, such as a wire fence. Even this will not make serious differences, but it is so easy to correct that you might as well do it.

To sum up, use identical antennas and equal lengths of good coax, 50-Ohm, and you will have no trouble. If you only want to have the antennas fire in one fixed pattern, you can use the setup in Fig. 3, with a T-connector between the two antennas. When I first worked Antarctica for a few years running phone patch traffic, I used this system.

I had quite a bit of noise from the power line, a steady S6, and this pattern cut the noise to practically zero. Also, most of the other stations I worked were in Florida, New Orleans, or South America, so I just left the antennas like that for three or four years before I changed and brought the lines into the shack where I could switch delay lines into the coax to the antennas.

I might mention one other idea, in case you haven't already thought of it. If one antenna is closer to the shack than the other, which was the case with my setup, you can remove a half wavelength of line from the antenna feedline, since either line can be used to make the change from broadside to end fire.

I brought both 50-Ohm lines into the shack and coiled up the quarter-wave matching sections of RG-59 and hung them on a nail, as well as the half-wave delay line.

Since the power is divided into two antennas and each feedline carries only half the power, RG-58 is ample for a 2000-Watt PEP sideband rig. I used it for years and only changed to RG-8 because it stood up better when buried in the ground going to my antennas. I always used RG-58 or 59 in the shack.

Now let's take up the question of quarter-wave spacing, which takes up less space and, for some stations, is a better arrangement. The quarter-wave patterns are C and D in Fig. 1.

It is also possible that you might want to use the pattern E, which is the bottom pattern in the second row from the left.

Pattern C is the same condition as pattern A for the half-wave spacing. It is what you get when you feed with two equal lengths of line, has a noticeable gain, a fair null on the sides, and is much better than a single vertical. The most used pattern, however, is the one at D, which, for some stations, is the best of all patterns.

By inserting a quarter-wave delay line at point X, the cardioid pattern will fire in the direction of antenna #2. If you insert the same delay at point Y, the array will fire in the direction of antenna #1. The null on the backside of this pattern is very deep, about 40 dB, and is useful for taking out foreign broadcast stations, a nearby amateur, or a local noise source. The forward pattern is about 120° wide, and, by switching from one line to the other, you can cover most of the directions around you. If you are in the northwest corner of the states, you can fire southeast and cover the U.S. The same is true for the other corners of the country. The gain is a little better in this configuration, also. It is about 4.5 dB, while the gain of the half-wave lobes is about 3.8 dB. It also has a lower angle of radiation than the half-wave pattern.

If you insert a half wavelength of line in either antenna lead, you will get pattern E, which is a slightly better end-fire pattern than the pattern at D, as far as gain goes. But the nulls at the side are not as broad, and the signals at the side will not be weakened as much.

Another pattern which is very interesting is F, and, perhaps, so is G. This requires only an eighth-wave spacing, which is 17' at forty meters. In this case, the delay line is 3/8 wave, which is 33'11" at forty meters.

This arrangement has, however, one great drawback. The swr,

because of the mutual impedance from the close spacing, can be quite high. In my case, it was about 5:1. When I first tried it, I didn't have a tuner, so I promptly took it down. Later I tried it again and found that a simple L-network would bring it down to 1:1. Since I only use ground rods instead of radials, I had no trouble, but, if you lay radials, you won't have room to run them in a circle. You can just run radials on one side of one antenna and the other side of the other.

If you want the pattern at G, you will have to add a half-wave delay line in one leg of the array to make it end fire.

Now that you have seen how simple phasing is, I hope you will try it out. Once you have tried it, you will never go back to a single vertical again. HyGain put out an engineering report on phased verticals a few years ago and said that they experienced a 12 to 15 dB improvement on receiving, and I believe them.

I will now add some general information on the subject. This won't add to any confusion, I hope, but will answer a few questions which will arise when you start to construct your antenna.

First is the matter of ground system. HyGain suggests the use of six 8-foot ground rods for their 18HT antenna as a substitute for radials, all about 6 inches apart around the base of the antenna. I use the method shown in Fig. 4, consisting of a single 8-foot rod at the antenna, no more than six inches away, and a square arrangement of 6-foot ground rods four feet apart, connected to each other and to the 8-foot rod, as shown. I have found this to be very satisfactory. I have so many trees in the way and my space is so limited that I simply cannot run radials.

Another way is to run insulated wire radials on the surface of the ground and pin them down by the use of bent wire Us from coat hangers. The grass will soon cover them, and you can mow the yard right over them. The ends of the radials will be hot and must be well insulated either by plastic tape or pieces of tubing slipped over them and closed.

If you use insulated wires, you won't need more than about 4 or 6 quarter-wave radials. When you use buried bare wire, you are using a different method. They are used to cut the ground resistance, and you need more.

Of course, the very best way, if you are surrounded by trees and power lines, is to mount the antennas on a pipe, preferably a quarter-wave long, and raise the antennas in the air. Then three sloping radials will do a fine job. They will serve to guy the pipe or mast and will make a sturdy installation.

Another consideration is: What bands will you be working? Half-wave spacing on forty meters is quarter-wave spacing on seventy-five meters, and quarter-wave spacing on forty meters is half-wave spacing on twenty meters.

Fig. 5 shows a simple way to reverse the pattern on any array with quarter-wave spacing, as well as to give a broadside pattern. The results of switching are very dramatic. Often if you ask a station to give you a signal report when you are firing in his direction, and then reverse it, he will not even be able to hear you at all.

One of the advantages of the half-wave spacing firing broadside is that storms approaching from the west do not cause heavy static until they are almost directly north or

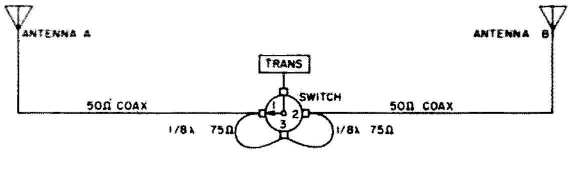

Fig. 5. Switching arrangement for quarter-wave spacing. At position 1, antenna A is fed directly and antenna B is fed through a quarter-wave delay line. At position 2, the direction is reversed. At position 3, both antennas are fed equally and a broadside pattern results. In position 1, there is a cardioid pattern toward antenna B and vice versa.

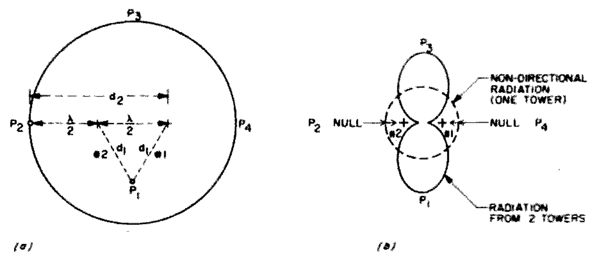

Fig. 6.

south of you. As they pass by, the static will fall off again as the storm goes to the east.

When I was running Antarctic traffic, this was a great help, as it was summer here when it was winter down there and the static here was often heavy. If this happens to you, it will sell you on phased antennas for good.

Phasing will also improve 2 meter and CB antennas, and these smaller antennas offer great opportunities for wire arrays.

The fundamentals of phasing are shown in Fig. 6. This is a half-wave spaced array and will show, for those interested, just what happens.

#1 and #2 are similar antennas, fed with equal currents, and are not affected by any surroundings which might cause phase shift or reflections.

Picture yourself at P1, which is a position equally distant from both antennas. Here you will get both signals from the two antennas arriving at the same time and, thus, with double the strength of one antenna. If you were at position P3, the same conditions would prevail.

Now put yourself at P2, and you will be twice as far from #1 as you were at P1. In addition, you are the same distance from #2 as you were at P1. We will assume that this distance is a half wave from antenna #2 and two half waves from antenna #1. The radiation at P2 from #1 will be out of phase with that from #2, and these waves will cancel.

Thus, at P1 or P3, you will get twice the radiation from a single antenna, and, at P2 or P4, you will get virtually no radiation from either, since it will cancel.

This will give you the pattern in Fig. 6(b). You will have about 3.8 dB gain to the north or south and a loss of 30 to 40 dB from the east or west. Signals or noise from the sides will be greatly weakened, and the signals from the north or south will be not only stronger, but also free of the interference from the sides. Add this to the very low angle radiation from vertical antennas, and you will see that towers and beams are not the only way to work DX.■

The 21-Element Brown Bomber

—2m beam with sadistically strong signal

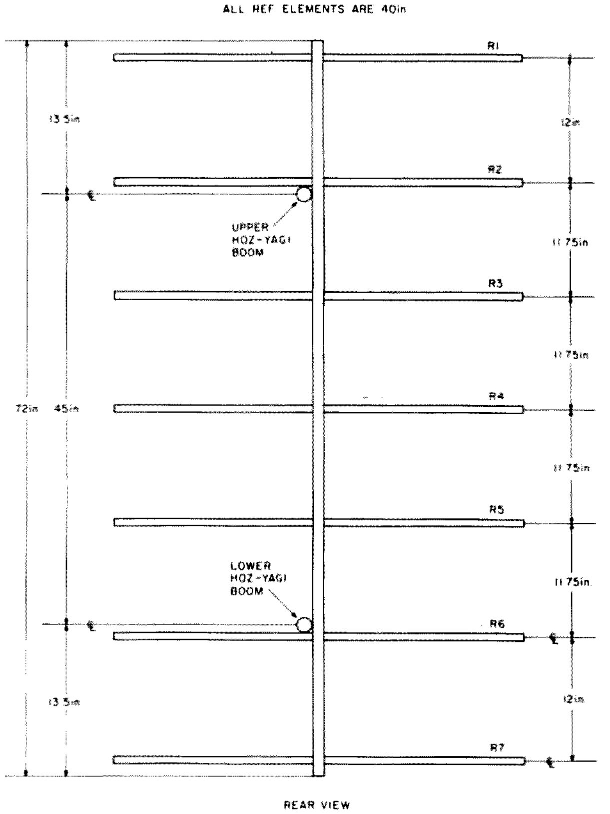

Fig. 1. Rear view. Reflector-to-reflector dimensions are approximate to help you visualize what the actual construction is. R1 and R7 go as close to the ends as mounting permits. R4 is centered at the 36" mark on the vertical mast. R2 and R6 are outside the horizontal booms and as close to them as mounting permits. R3 is centered between R2 and R4. R5 is centered between R4 and R6.

Dave Brown W9CGI
R5, Box 39
Noblesville IN 46060

This antenna really may be too much for the average 2 meter enthusiast. It is larger than the average 2m yagi, though not really huge in the 20m yagi sense. Basically, it is one yagi over another and at closer spacing than you may be used to. The antenna is best described as a British J-slot yagi with some very different modifications. In slot terms, it is an "8 over 8" slot, but there has been quite a modification in the reflector territory to enhance the front-to-back ratio.

In addition to a written description on how I built mine, I will give a complete parts list in commercially-available part numbers. This should make it easier for you to acquire parts if you are far from big cities and supply houses. The vast majority of the parts are Hy-Gain, because they came from four 64B, 4-element 6m beams I had on 6m SSB for a while. The part numbers given under the part number column in the parts list are Hy-Gain part numbers from their 64B yagi sheet.

Fig. 1 is a rear view of the antenna. There are seven reflector elements making up the reflector "screen." Curving the mast that these are mounted to into a somewhat circular form may enhance things, but the mechanics of that are much harder than the effort is worth. Therefore, on this model, the mast is straight up and down, vertical to the ground. The circles in the drawing are the yagi booms, which are 45" apart, center to center. The vertical boom shown at the rear (the front is the same, without the reflector elements), is 6-foot-long easy-to-find Reynolds aluminum tubing. Mine was number 4241, 1" o.d., .049" wall thickness. Measure and mark the 36"

center of the mast. From this mark, measure up 22.5" and down 22.5", and mark these spots. The top and bottom reflectors go as close to the ends of the vertical mast as the mounting hardware will allow. The next set of reflectors working toward the center from the ends is placed so the reflector crosses the yagi booms. This works out to be about 12" from the end reflectors on mine. The next set of reflectors is another 11-3/4" toward the center. This gives approximately equal spacing between all seven of the reflectors, or at least as close as other hardware will allow. The last reflector, of course, goes at the center where you marked the 36" mark.

At this point, I would like to cover how I assembled mine, as it can be unwieldy if you don't go about it right. The yagi booms will come to you as two each of booms 68¼" and 75¾" long. First, place the cap plugs on one end of each of these 4 items. Now, using the ends that do not have cap plugs, lay one end of a 68¼" piece (rear) end to end with a 75¾" piece (front). Use one each of items 3a and 3b (see parts list) to wrap around the end-to-end pieces. Before bolting, lay the ends in one half (3a), and mark the boom pieces with a lead pencil where the end of the clamp touches the boom with the boom's splice centered in the clamp. This is so that later, when the boom clamp is closed over the boom pieces, you can be sure the splice is centered in the clamp. Do this on the other boom pair, as well. Now, using the ¼"-20 x ¾" long screws (2a) and one lock washer and nut per screw from 2b, and using the outermost 4 holes of the clamp, loosely assemble both clamps, forming two 12-foot-long booms with cap plugs on their extreme ends. When you are sure you have the splice centered in the clamps, go ahead and tighten the four screws on each clamp. You now should have two reasonably rigid 12-foot-long booms for later yagi assembly.

If you have a workbench edge that has no overhanging top (or can block it up flush), the next steps are easier. Assemble item 4, the U-bolts, into the clamps on the yagi booms with the U of the U-bolt on the same side as the V of the clamp. You should use all of the hardware of item 4 in the parts list to do this. Don't tighten the U-bolts down just yet. If you purchase the EMT conduit in standard 10-foot lengths, now is the time to saw off a 48" to 50" piece of it. This becomes the center vertical mast of the array and allows easier assembly and mounting, as you will later see. Mark the center of the 48" to 50" piece, and then make two marks 22.5" in each direction from the center mark. These marks will then be 45" apart, the distance that the yagi beams will be vertically separated. On a large flat surface (garage floor?), lay the two 12-foot booms about 45" apart with the U of the U-bolts down. This leaves the eight nuts up so you can tighten them. Slip the EMT conduit through the 4 loops of the U-bolts, and center the 45"-apart marks over the centerlines of the booms. When you are sure the two booms are in line with one another (hold one end of each against the floor at the front or rear of the booms), tighten the U-bolts with a wrench. If you are in a windy area (who isn't?), you may want to drill a 5/16" hole through each clamp (after you double-check boom alignment) and pass a 5/16" bolt (not listed in the parts list) through these holes. The hole should be in the center of the clamp on each side and pass through the boom splice. Use 5/16" flat and lock washers and nuts on these bolts (also, not listed). You now should have a rather large 12-foot "H" shape. With this "H" on its side (EMT tubing vertical), you can use a U-bolt (not listed) to bolt the "H" to the workbench, so the EMT is about 1 foot off the floor and the booms are parallel to the front edge of the workbench. (I hope you don't mind holes in the front edge of your workbench, because, if you hit the right spot to not later have elements hitting your workbench legs, you must have cheated and measured things first.)

Take the vertical mast you earlier marked off for the reflector support (rear vertical mast) and 2 of the U-bolts from item 22, and drill the booms so the U-bolts pass through them in a horizontal plane. Drill both upper and lower booms. Position the U-bolts so they are just ahead of the cap plugs. If you pass each of the U-bolts through the boom from your side, while keeping the vertical mast enclosed in the U-bolt loop, you have only to put a flat U-bolt plate (or flat washers) over the U-bolt ends, lock washers, and nuts and draw everything up just snug. If you put the EMT center mast at 1 foot off the floor, with the rear vertical mast just touching the floor, the 45" marks on the reflector mast should almost line up in the center of the last U-bolts mentioned. Align them until they do and tighten the U-bolts. You now have a box 45" high by 68¼" wide, with the front ends of the horizontal booms still hanging loose out front.

Move to the front of the booms. Drill both of these the same as for the reflector vertical mast. Take the second Reynolds 6-foot long, 1"-diameter piece, and saw it down to 50". Mark the center of this mast, and put two marks 22.5" from the center (45" apart). Place the U-bolts in from the same side, and,

ELEMENT LENGTH BOOM C/L TO TIP

FM-20	18in	17.875in	17.75in	17.625in	17.5in	17.5in
R	D1	D2	D3	D4	D5	D6
SSB-20.25	18.25in	18in	17.8in	17.7in	17.6in	17.6in

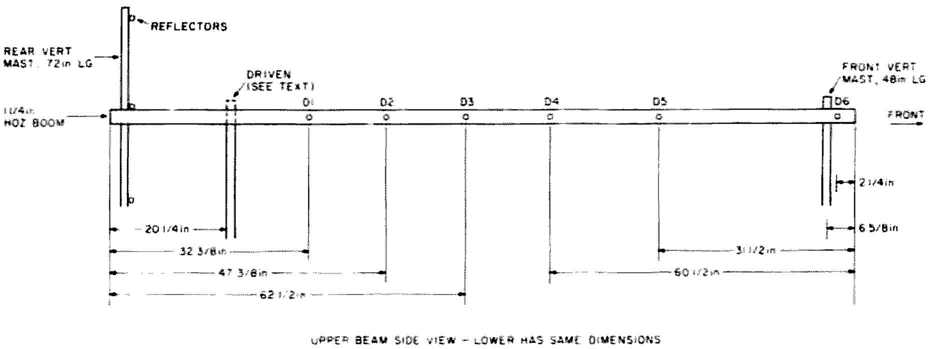

UPPER BEAM SIDE VIEW – LOWER HAS SAME DIMENSIONS

Fig. 2.

using same method, do as you did for the rear vertical mast. Line up the 22.5″ marks with the centerline of the horizontal booms, and, again, draw the U-bolts down snug. When you're sure of the alignment, tighten the bolts down with a wrench. You should now have a large and quite rigid figure "8" lying on its side that you can begin mounting the actual antenna on. Up until now, you have been only working on the support frame.

The antenna and frame are all aluminum, except for the center EMT mast and the steel hardware, so the overall array is quite light. One man can easily lift the finished array, but I won't kid you—it is rather unwieldy, and I would find some help and use a pulley arrangement getting it up.

Assuming you are over a flat floor, begin the next phase by mounting all the directors on the lower boom. To do so, cut 12 of the 40″ aluminum tubes (item 6) into two 20″ pieces each. By all means, use a plumber's small tubing cutter as used on copper tubing. One with a ½″ or so capacity will handle this job and is quite inexpensive. Place one each of these aluminum tubes into the tube reducer (item 5) with most of it hanging out the small end of the reducer. Slip one of the compression clamps (item 12) over each of the tube/tube reducer combinations. Slip a square nut (item 16d) between the compression clamp and the reducer, and line up the hole of the nut and the slot in the reducer. Run a screw into the nut through the hole in the compression clamp and pull it down just finger tight. Do this to 24 combinations. The 20″ tubes should come just short of even with the fat end of the reducer. Do not tighten them more than finger tight at this time.

The next step is to assemble the elements onto the booms where they belong. Mark off the upper and lower booms, as in Fig. 2. Make the marks exactly along the top centerline of each boom, and you will save time later. Make the marks and the centerline imaginary Xs, and, where they occur, drill small starting holes for the self-tapping screws (item 16f). There are holes in the element clamps (item 1). At each of the starting holes

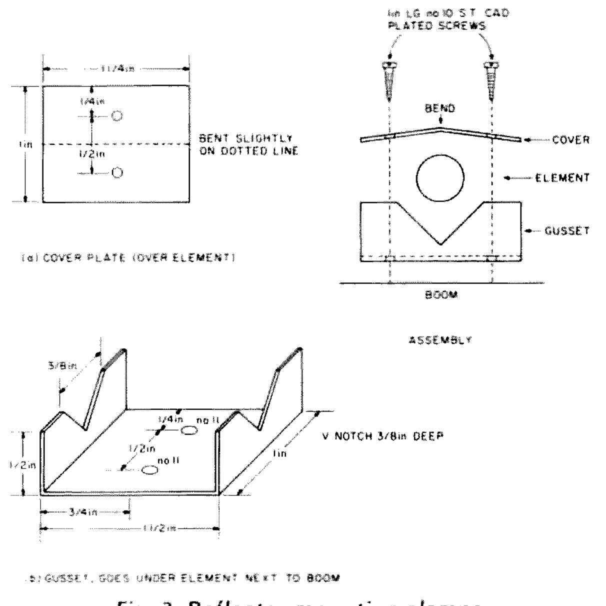

Fig. 3. Reflector mounting clamps.

in the booms, mount one of the element-to-boom brackets (item 1). Be careful to keep the brackets parallel to the floor. Once the 12 brackets are mounted, use the other remaining 12 to form the bottom side of the mountings by loosely starting a screw (2a) and lock washer and nut (2b) at opposite corners of opposite boom sides of the bracket. Tighten only enough to bring the plates (upper and lower) close, but not so they're touching. You should have 2 screws in each clamp, 2 brackets (item 1) per clamp (or director position), and 12 positions (6 upper, 6 lower) started. Now slip the fat end of one of the tube/tube reducer combinations into each opening of the 12 clamps (24 openings in all). Then, doing one position at a time, draw the upper and lower plates snug around the 2 reducers, making sure the reducers are pushed in flush with the boom. Also at this time, push the tubes in flush with the boom. With the bracket holding the reducer snug now, tighten the screws in the compression clamps with the screw oriented downward. This makes the tube and reducer into one rigid piece. The hole in the bracket allows some play on the #10 self-tapping screw holding the top bracket, so, before you tighten the rest of the bracket screws inserted at this time, be sure the overall element is parallel to the floor (horizontal). Once all the alignment has been checked and is assured correct, tighten all hardware—¼″-20, self-tapping, and compression clamp screws. When one director is done, move on to the next, doing the lower boom first, as it is closest to the floor and you can better judge the part parallel to the floor. Then do the upper boom, measuring either from the floor or from the completed boom. From the floor is a good bet, if you have a long ruler or stick, and then you can use the measurement from the upper boom element to the lower boom element as a cross check. If you have carefully cut the twelve 40″ pieces (item 6) exactly in half and pushed them into the reducers until flush with the boom in all cases, you now have, fully mounted, 12 directors of 41¼″, or 20-5/8″ per side from the boom centerline. You can trim them later.

The time has now come to do something about that bald reflector mast. Use the home brew clamps and mounting system of Fig. 3 to mount the full length (40″) of the seven remaining tubes. The reflectors are used at their full 40″ length and require no further trimming like the directors. Mark a point 1″ off center on all reflector elements. This point centers on the centerline of the mounting clamp and vertical upright mast. Let the long side be the one that goes to the long side of the mounting, or, in other words, the horizontal boom side. What this does is center the reflector over the horizontal boom and behind all the other elements. The fact that its point of ground is offset seems to cause no problems at all—i.e., no false lobes, etc. You have marked the reflector masts earlier for where they go, and the same small starting holes for the self-tapping screws are used here for the mounting holes. Use the mounting bracket for a template on the vertical mast. All of the reflectors mount on the front, or driven element side, of the rear vertical mast. The reflectors form a "screen" behind the quasi-yagis, so try to align the reflectors so they are 90 degrees to

the boom and in one flat plane (vertical) to each other. Use Fig. 1 to get the idea. This is a rear view of the array, with the driven element and directors omitted to avoid confusion.

Let's get on to the live part of this whole aluminum farm—the driven element. When you find aluminum tubing, if it is soft enough to form into the rectangular form of the driven element of any J-slot antenna, it also deforms later (wind, birds, buzzards, whatever). If you find and use the larger 5/8" or 3/4"—hard drawn—there are 90-degree plugs to form a square or rectangle out of straight tubing pieces. You can go that way if you like, but I have found a slick way for other projects that worked out well for this one, too. It is an aluminum U-channel. You can cut it neatly using a miter box and hacksaw for nice 90- or 45-degree angles. The driven element is 15" across, side to side, inside to inside. The height is cut one of two ways. For the FM man, use the inside of both upper and lower booms, or a dimension of 43-3/4" outside to outside on the vertical sides. A better match for the SSB man in the 145 MHz territory occurs if the vertical parts are cut a full 45" on the outside dimension and the tops of both booms are used for mounting, instead of between them as on the FM version. You may want to adjust these figures according to your choice of operation, even using the boom outsides for mounting in the case of 144 MHz. The bandwidth is not all that critical, and my almost flat 1:1 SSB version is only up to 1.8:1 at 146.94 MHz FM. The driven element gussets or clamps slip into the U-channel (facing rearward) of the driven element, and are secured by a self-tapping screw at their tail end and the driven element mounting screw in the channel itself. The "L"-shaped reinforcing corners have four holes and just slip down into the channel. Try to buy it all at the same store so you can try fitting the parts right there. They are all standard parts except the mounting brackets and gussets, in order to keep the metal work to a minimum for the weekend builder. They make Ts like the Ls that you could use for the gussets, but I just have never found anything available ready-made to beat the mounting clamps for the reflectors as I have shown. The L slips into a mitered (45 degree cuts to mate) corner, and then holes are drilled to match the holes already in the L. Slip a square-head nut into the channel over the L-plate and run a screw in from the channel outside side. 4 screws later, you have a very rigid corner. 16 (total) and you have a very respectable and sturdy rectangular driven element. Don't forget to assemble it "around" the top boom in the SSB version. For FM, it just slips between the booms in assembled form. Be sure to use the gussets of some sort, or the driven element will pivot on its own vertical axis of the boom to driven element mounting screws. It may be easier to drill the holes where the delta match will mount with the driven not mounted. I did it after with no problem. The holes go from the outside to the inside of the vertical sides and into the vertical center of them. The holes pass through both walls of the U. The mounting bolts will later pass through the flattened ends of the delta feed, through both walls of the U, and a nut on the inside of the rectangle.

Cut the remaining 40" tube into two 20" pieces, just as you did the directors. Flatten one end of each for about 1". I suggest a vise and slow pressure for this, as a hammer seems to harden and make the tubing I used brittle. About ½" down the flattened end, a small bend is plated to start a curve that will bend inward toward the centerline of the array from the outer edges of the driven element. Final forming can be done when you draw the two parts of the delta towards each other and their common mounting plate. That plate for me was a leftover ground plane radial plate from an old CB antenna. Any plate you can mount the delta to, but keep it insulated from, with about 4" between the tube ends, is fine. See the drawing for a better idea. The delta mounts with the wide ends screwed to the center of the vertical upright parts of the driven element and the narrowing V portion facing forward. The 4"-apart portion of the V is almost under one and above another D-1 director. ½" PVC tubing makes a fair insulator if you use a 6" piece. Run 2" of delta into it and bolt it 1" from the end you entered. Then clamp the other end of PVC in a ground plane clamp and bolt it, being careful not to get the bolt anywhere near the active delta tube. The clamp (item 11) is sawed in half and used to connect the coax to the delta feed. See the delta drawing to show the clamp positioning. Start with the dimension of 13½" from the front edge of the driven element and delta tube to the back edge of the clamp. Adjust from there for minimum swr at your desired frequency. The RG-8 coax feeding the antenna is brought in to the clamps (item 11), with the braid to one screw and clamp, and the center to the other screw and clamp. Which is which is like asking, "do you like right-hand

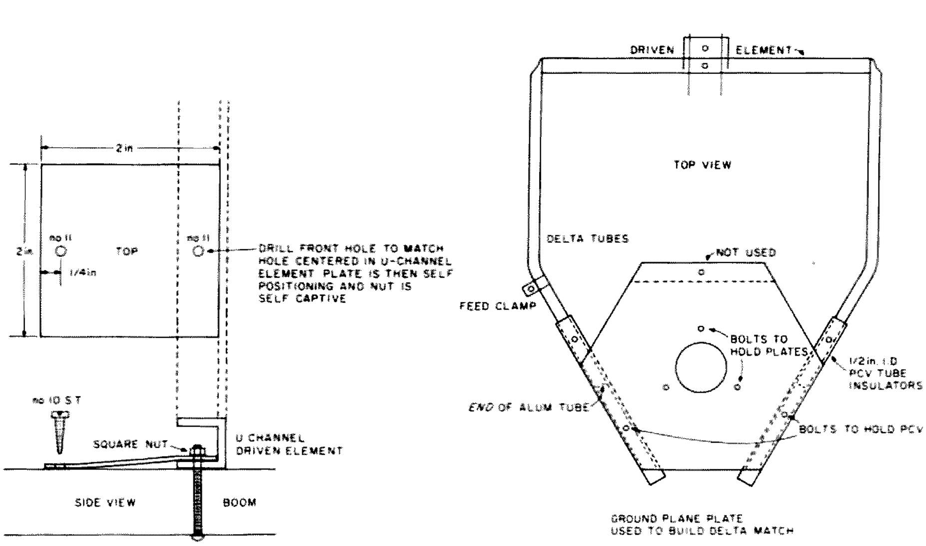

Fig. 4. Driven-element-to-boom gusset (anti-element twist).

horizontal polarization or left-hand polarization?" (In other words, it matters not.) The delta match lies on the same plane as the two horizontal booms and halfway between them. The feed cable is dressed away from the delta feedpoint in a 60-degree (not that critical) angle upward to the upper boom and is taped securely there and several places down the upper boom until the center vertical mast is reached, where it turns downward to the tower, shack, etc. The taping to the upper boom helps support the delta match weight and holds it positioned. Carefully make this feedline a multiple of half wavelengths. 1½ or 2 should do it. If you do this very carefully and take into account the velocity factor of the coax you use (50 Ohm of some kind), the end of the cable can have a male connector at that point, and a bridge put in here will show exactly what it would at the antenna feedpoint. A coaxial barrel can then join the coax to the down run when the meter is removed. Tape the connectors well for weather, and a coat of clear Krylon spray goes on everything here.

I believe this should get you going. Even if you use your own home brew methods, the beam and principles all still hold. All that remains is to trim the directors to the dimensions of Fig. 1. With a rigid element to work on and the cutter gadget, this really goes fast—almost too fast, so here is a trick to use to avoid errors. Item 10, the smaller cap plugs, can be added to all the reflectors, as they are already the right length (14 plugs). The remaining 24 plugs are added one at a time, as you complete each cutting. That way, if you are careful on your measurements, you cut each one only once. Aluminum is not cheap, and it's a good way to save a buck.

Send an SASE for help, as always. I put mine together in three evenings of about four hours each, working carefully and taking notes for this article. Besides the great gain, the front-to-back is truly amazing. I can null (0) an S-8 signal by going front to back. Rather than quote 3 dB beamwidths (14 degrees), let's say the usable beamwidth is about 25 degrees.■

Parts List

	Quantity		Part #
1.	24	element-to-boom brackets	161422
2a.	109	¼"-20 x ¾" large stainless steel bolts or Hy-Gain hardware for assembly of items 1, 3, 11, and 18	505325 bolt
b.	109	¼" stainless steel nuts or Hy-Gain hardware for item 2a	556960 nut
c.	109	¼" stainless steel lock washers or Hy-Gain Hardware for item 2a	567110 washer
3a.	2	boom-to-mast body	385142
b.	2	boom-to-mast clamp	385144
4a.	4	U-bolts 5/16"	545146
b.	8	lock washers 5/16"	567075
c.	8	nuts 5/16" #18	551026
5.	24	tube/reducer 5/8" x 7½	190002
6.	20	beta tube, 7/16" x 40", 7 for reflector as is; 12 split into 20" lengths for elements before "pruning"; 1 split into 20" length for delta feed	175637
7.	2	boom (rear half) 1¼" x 68¼"	175648
8.	2	boom (front half) 1¼" x 75¾"	175649
9.	4	cap plugs 1¼" for items 7 and 8	455630
10.	38	cap plugs 7/16" for item 6	475639
11.	1	clamp—sawed in half for delta feed	165641
12.	24	compression clamps—for securing elements into tube/reducer (fitting part 6 into 5)	165123
13.	24	hardware for item 12—screw 10-24 x 5/16"; nut square 10-24	505671 555362
14.	2	4" pieces of 5/8" o.d. PVC tubing delta feed insulators	N/A
15.	2	6-foot pieces of aluminum channel 33/64" x 1/2" x 1/16" wall cut into 43-7/8" and 15" pieces	N/A
16.		cadmium-plated stove bolt hardware for assembly of item 15	
a.	4	3/16" x 1" screw	
b.	2	3/16" x 1½" screw	
c.	16	3/16" x ½" screw	
d.	18	square nut 3/16"	
e.	2	hex nuts 3/16"	
f.	38	self-tapping hex-head ¾"-10 screws	
g.	4	corner L-braces 1/8" x 3/8" x 2½" on a side to lay inside corners of channel forming driven element	
17.	2	driven-element gussets 2" x 2" of .060" or thicker (see Fig. 4).	
18.	2	ground plane-type radial brackets (delta feed bracket)	
19.	7	home brew reflector mounting brackets, .060" material or better (see Fig. 3)	
	7	cover plates (see Fig. 3)	
	14	self-tapping, hex-head, cad.-plated 1" x 10 screws—reflector mounting	
20.	2	front and rear vertical mast—Reynolds #4241, 6 ft. long 1" o.d. by .049" wall aluminum tube stock	
21.	1	48" to 50" section of 1½" EMT electrical conduit (center vertical mast and main support for mounting the array)	
22.	4	U-bolts and hardware for mounting front and rear vertical masts (item 20)	

The Towerless "Tower"

—new grounded-rotor design

Robert H. Walker K4FK
400 Tivoli Ave.
Coral Gables FL 33143

Roy D. Mazzagatti N4OG
18551 S.W. 204th St.
Miami FL 33157

Amateur radio is experiencing a tremendous resurgence of growth. Many newcomers, however, are missing much of the potential pleasure of the hobby because they are settling for relatively inferior dipoles or ground planes, even on bands for which directional antennas are commonly available. Today, a used triband beam and rotor can often be purchased for about the same price as a new multiband trap vertical. The problem then becomes one of supporting the beam, securely, at some height above the ground. This immediately conjures up visions of a tower, both an expense and a mechanical complexity with which many newcomers are unwilling or unable to cope.

Photos by James R. Allison WA4KIL

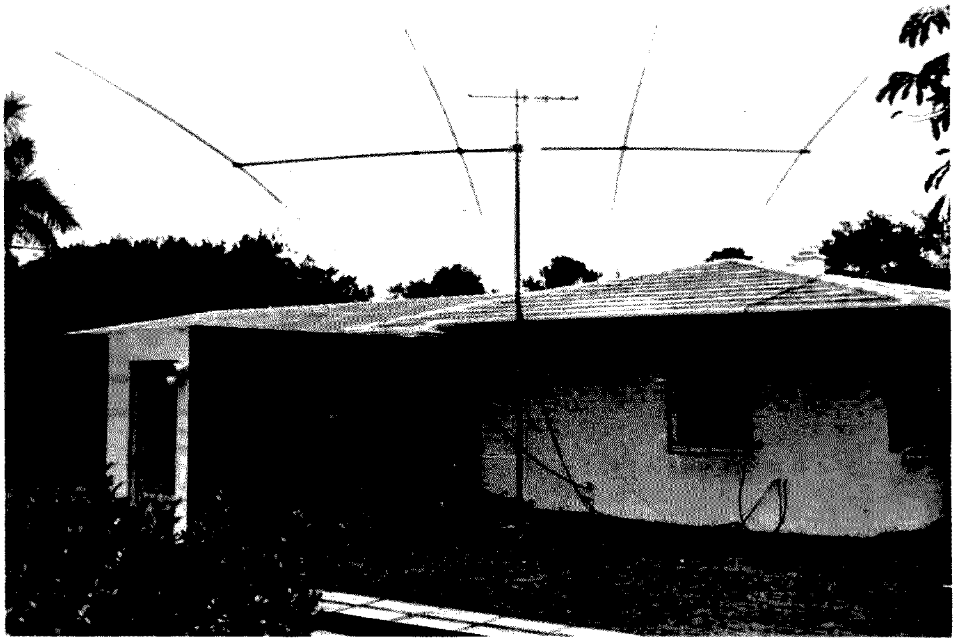

Photo A.

A telescoping TV mast is an alternate support structure which is summarily rejected by most hams. We, too, cringe at the thought of mounting both the beam and the heavy rotor on the weakest section of the mast and then relying on guy wires to keep the entire structure erect.

The following is a description of a simple and inexpensive method of making a telescoping TV mast into a reliable support for a beam or quad. This method has been employed at K4FK (formerly WA4FKJ) since 1971. During that period, there have been no failures or difficulties of any type. Photo A shows a 50-foot telescoping TV mast supporting a 4-element 20 meter yagi beam. The beam has a 26-foot boom and is up about 20 feet. Note that no guy wires are used. The secret is to mount the rotor at the bottom of the mast and to turn the entire structure.

Photo B shows the rotor mounting. A CDE Ham-M was used simply because we already owned it. There is certainly no need to use as heavy a rotor if you already

have a lighter one available. The rotor is bolted to a piece of 24" x 12" x 1/2" plywood. The size of the board is not critical, but it would be wise to avoid the use of one much smaller. It should be given several coats of paint for protection. At K4FK, the original 1971 vintage board is still in use and shows no signs of deterioration.

The rotor will need to be spaced about 1/2" above the board to keep it from sitting directly on the control cable. CDE's Tower Plate (part number 50559-10) is excellent for this purpose. Flat washers will suffice if such a plate is not available. Use bolts about 3/4" longer than necessary to pass through the board, spacers, and into the rotor. You will need to use flat washers as spacers on the bottom of the board. The bolt heads and washers will dig into the ground and eliminate the need for staking down the board. Since the rotor is essentially at ground level, it is a good idea to use a coating of silicone sealer over the terminal connection block to help prevent corrosion and accidental shorts.

In areas where snow and/or flooding occur, the rotor should be raised above ground level. Two possible ways of accomplishing this are: Mount the board on heavy brackets which are bolted to the wall of the building, or construct a set of cross-braced "legs" for the board. Just remember that your brackets or "legs" must be able to withstand the full torque of the mast and antenna system.

Photo C shows a heavy-duty bracket supporting the mast at the eave of the roof. Your individual installation will determine the best type of bracket for you. They are available in many different configurations and sizes from TV antenna suppliers. Make sure the one you choose will hold the mast clear of any roof overhang and will comfortably accommodate the outside diameter of your mast. The bracket should be tightened sufficiently to eliminate any free play between the mast and the bracket, but left loose enough for easy rotation. Since there is metal-to-metal contact at this point (unless you fit a bearing), lubrication will be necessary. Number 2 lithium grease has been found to withstand the rigors of the Florida climate and makes an excellent lubricant.

Your antenna can now be installed at roof level, making servicing and adjustment especially easy. In times of extreme weather, your antenna can be lowered to the ground in about 10 minutes. We fasten the beam to the next-to-the-smallest section of mast and then partially extend the heavier sections. If you favor the unguyed approach, a height of 18 to 25 feet is safely attainable, depending on the size of the antenna. If you're willing to employ guy wires on the mast's slip collars, then a height of 35 to 40 feet seems reasonable. As a bonus, you can suspend an 80/40 meter inverted vee from one of the slip collars beneath the beam.

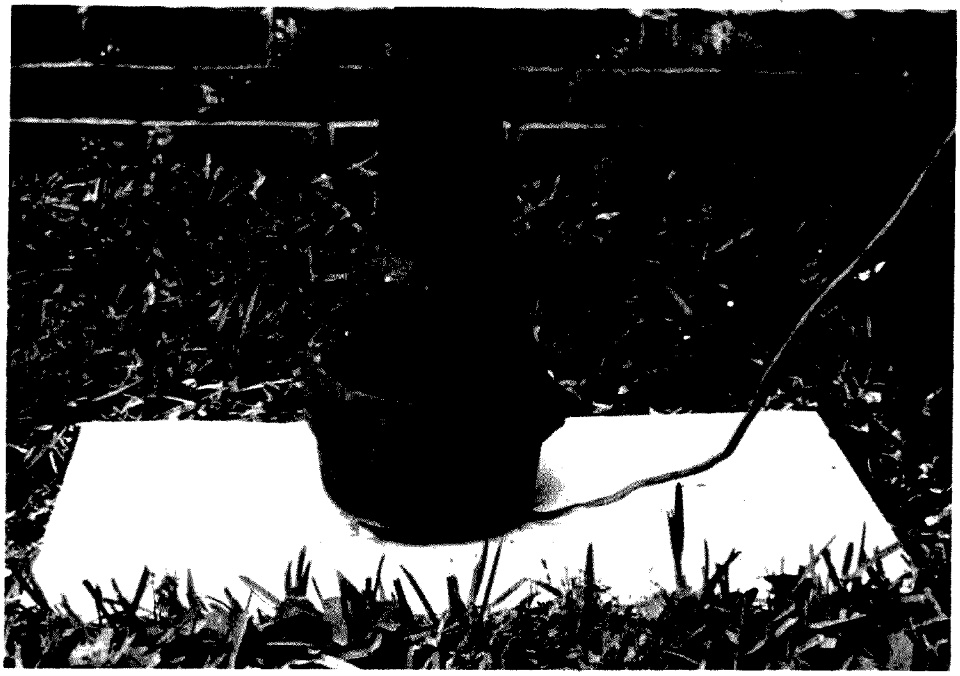

Photo B.

Photo C.

With a quad, this becomes somewhat more difficult to do.

No, you won't be a "big gun" in the pileups with this arrangement. Your antenna performance will, however, greatly exceed that of a conventional dipole or a ground plane with only a few radials. You have come closer to maximizing the value received for your antenna dollar. Additionally, you have a good start on the project, should the day arrive when you decide that a tower is an absolute necessity. ■

The Two Hour, Two Meter Beam

—simple five-element loop yagi

William Thornburg WB9TNW
400 E. Jackson
Desoto IL 62924

The quad, or loop, antenna is a special antenna to me. Perhaps this is because of its antiquity. I remember old movies on TV where wireless operators used receiving "loops." And, on an often traveled highway near my home, an amateur had a tremendous triband quad array. I didn't recognize it for what it was until many years later, but I knew it had something to do with radio.

My need for a two-meter antenna became acute when I had to remove my old home brew wooden-masted ground plane from my tower to make room for a new steel mast, rotor, and triband beam system.

The excitement of an HF beam caused a virtual end to two meter activity. After a few weeks, I rigged up a mobile antenna on the top of a bookshelf and was able to trip the local repeater. However, my rig is a two-Watt affair, and I began to get complaints of a scratchy signal.

It only took a couple of days of rummaging through the *ARRL Antenna Book* and the *Radio Amateur's Handbook* to arrive at a plan: a quad for two.

I chose 146 MHz for a target frequency. The sizing of the passive elements is roughly a 3% series. For example, the reflector is about 3% larger than the driven element, the first director is about 3% smaller than the driven element, the second director is about 3% smaller than the first director, etc. For those desiring a different target frequency, start with a driven element which is (1005 x 12)/freq. in MHz inches around, and scale the passive elements according to the 3% rules.

A person who is experimentally minded might "adjust and test" in an attempt to optimize this antenna. Factors such as taper ratio, element spacing, wire size, and feed system all or partially affect forward gain, swr, feed impedance, bandwidth, and front-to-back. I was in a hurry and just slapped things together.

The construction of this antenna is simple, and the pictures tell it all. My old ground plane mast was an 8-foot two-by-two. I hacked it up into a 6-foot length for the boom and a

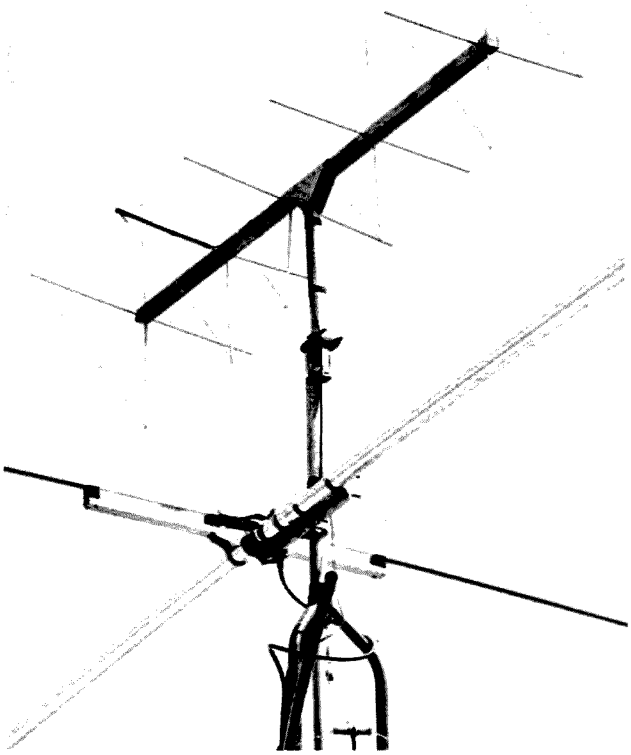

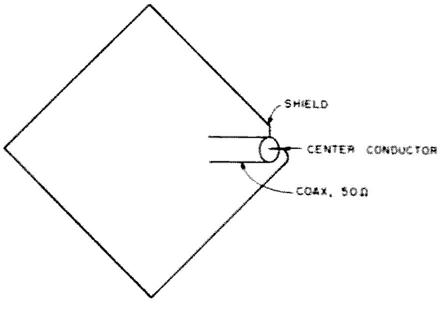

Fig. 1.

2-foot length for a shorty mast. The spreaders were made from 5/16″ wood dowel stock. Another good material would be fiberglass arrow shaft stock. You could even use balsa or spruce sticks. The critical dimensions are in Table 1.

Element	Length (inches)	Dowel length (inches)	Interelement spacing (inches)
Reflector	85	30	reflector to driven element—17
Driven element	83	29.3	driven element to first director—13
First director	80	28.3	first director to second director—16
Second director	77	27.2	second director to third director—21
Third director	74	26.2	

Table 1.

The elements were made from 18 AWG solid copper wire. Plastic insulated wire could be used. Magnet wire from old television power transformers would be perfect, and the price is right.

Each element requires two spreaders, so I used an offset of about 0.5 inches when I drilled my holes in the boom. A drill press is the ideal tool for this job.

I made my spreaders a shade longer because I notched the ends with a moto-tool to accommodate the wire. You could use tape or string for the same purpose. I used epoxy to glue the spreaders in the two-by-two boom, using straight pins to hold some of the loose ones.

When cutting the wire, allow an additional inch or two. When you solder the loops closed, snip the excess wire off.

My 2-foot mast was butt glued to the boom, and gusset plates of scrap ¼″ plywood were used. A few screws hold the wood together nicely while the glue hardens. The joint between the two-by-two mast and the pipe mast of my antenna installation was made using one U-bolt and one hose clamp, because that's all I could find at that moment.

I used the diamond configuration, and feed was applied at a side corner to achieve vertical polarization. No special matching was attempted. I just connected the ends of the coax in the loop. (See Fig. 1.) The passive elements are closed loops. The end of the coax could be potted with epoxy to keep water out. A touch of varnish would help preserve wood parts.

On the air, results were very satisfying. My friends report a 2 to 3 S-unit front-to-side and front-to-back ratio. In fact, with my two-Watt transmitter, I can hear stations that can't hear me.

According to the classical antenna theory, a 5-element yagi parasitic array has a forward gain of about 9.5 dB. This quad parasitic array seems to be behaving in a similar fashion. For the person who would like to bone up on quad theory, a suggested starting place is Hardy Landskov's article, "Evolution of a Quad Array," in the March, 1977, issue of *QST*. Also, my copy of the *ARRL Antenna Book* has always been a big help.

A special thanks goes to Mr. Lucius Smith for his photographic skill. ■

Now Try 1296 MHz

—simple discone antenna

John M. Franke WA4WDL
1006 Westmoreland Ave., Apt. 225
Norfolk VA 23508

Norman V. Cohen WB4LJM
7719 Sheryl Drive
Norfolk VA 23505

Ask most amateurs why they do not try the microwave bands, and you will receive four standard answers:

1. Nobody to talk to.
2. No commercial equipment available.
3. Communication is limited to line of sight.
4. Construction requires lathe and mill precision work.

The first reply is self-serving — if you get on the band, then there is another operator to talk to. The second reply is sadly true, with the exception of the Microwave Associates "Gunnplexer." The third reply reminds us of the response to two meter FM before repeaters came on the scene. The fourth is a myth — many of the pioneers in microwaves started with a soldering iron and tin snips. Good examples of what can be done with simple tools are the many fine construction articles by Bill Hoisington K1CLL.

This article shows how to construct simple and efficient broadband antennas for 1296 MHz and up. The construction is not difficult and can be done with simple hand tools. The antennas can be classified as inverted discones. You can find the theory of operation elsewhere; this will be concerned with the practical construction.

Fig. 1 shows a cross section of the inverted discone. The conic portion has a 60-degree apex angle. The cone's base and sides are all made three-eighths wave long at the lowest frequency of interest. Most texts specify this length to be one-quarter wave, but we have found that three-eighths wave gives a significantly lower vswr. The disc diameter is also three-eighths wave. The cone is made by cutting a semicircle

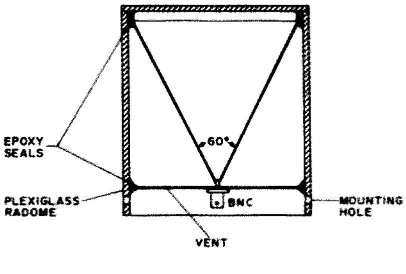

Fig. 1. Inverted discone antenna.

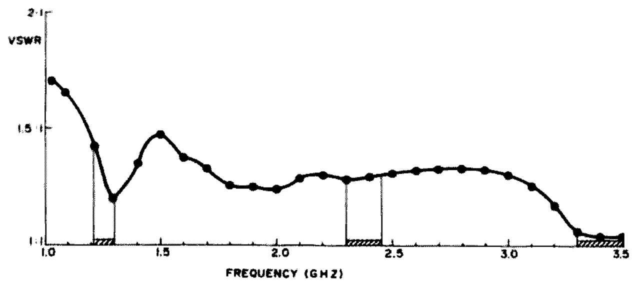

Fig. 2. Vswr of 100 mm inverted discone antenna.

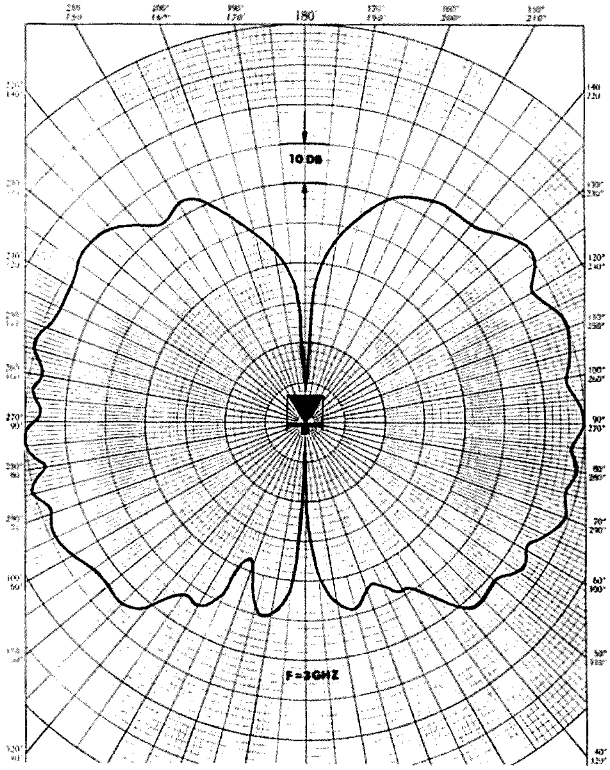

Fig. 3. Polar plot of 100 mm inverted discone.

from copper or brass sheeting with a radius equal to the desired length and rolling it into a cone. The edges are sweat soldered. The BNC connector is sweat soldered to the disc, and then the cone peak is soldered to the connector's center pin. The entire assembly is slid into a Plexiglas™ radome which serves to support the cone and weatherproof the antenna (see the photograph). If the radome is allowed to extend below the disc, it can serve as a convenient mounting ring. The antenna in the photograph has a base diameter of 4 inches (100 mm). The vswr from 1 GHz to 3.5 GHz is shown in Fig. 2. A typical radiation pattern is shown in Fig. 3. The antenna is vertically polarized. The horizontal radiation pattern is a circle. The useful bandwidth for an inverted discone is 5 to 1; a 1 GHz design is useful to 5 GHz. A smaller unit would be usable to still higher frequencies. ■

Joe Kasser G3ZCZ/W3
11532 Stewart Lane
Silver Spring MD 20904

The OSCAR Boppers

—turnstile antennas for 145 MHz and 432 MHz

This antenna is cheap and simple, is made out of aluminum angle and Plexiglas™, requires no special tools, and anyone can assemble it in less than 30 minutes.

The same basic design may be used for both 145 MHz and 432 MHz.

The dimensions of the elements and the matching sections are different for each band, of course, but the center section is the same.

Aluminum angle may be purchased in six-foot lengths. If one such length is cut into four equal pieces, it is the correct size for the two meter turnstile.

The center piece, shown in Fig. 1, is a piece of Plexiglas ¼-inch thick and 1-inch square on a side. Four holes are drilled in each corner for mounting the elements and a center hole is drilled for mounting the whole thing to a mast. The holes can be measured and drilled ¼ inch away from the sides, or the elements can be placed into position and spot drilled using a drill press.

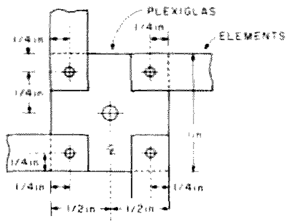

Fig. 1.

The elements are shown mounted to the center piece in Fig. 2. A no. 4 bolt passes through the center piece and element. A washer is placed on the bolt below the Plexiglas. A solder lug is placed on the bolt between the washer and the nut. The coax cable is soldered to the lug later.

The 70 cm antenna is made in the same way but with shorter elements. A reflector element can be placed beneath the driven element. The antenna can be fed in any manner that you wish, for circular or linear polarization. One technique is to mount the antenna facing north-south and feed each dipole in a linear polarization mode, switching antennas as necessary. A second technique is to use circular polarization, but that has to be changed when going from receive to transmit via OSCAR.

Results in Use

Both the 432 and 145 MHz versions have been used to access the AMSAT OSCAR 6 and 7 spacecrafts. The 432 MHz version was fed with 8 W of CW power, and 599 signal reports were received. The 145.9 MHz version was fed with 50 W of CW power, and signal reports of 569 were received.

For $2.00 and 30 minutes, you can't go wrong. ■

Joe Kasser with his two-dollar turnstiles.

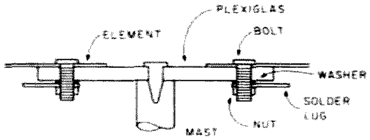

Fig. 2. Materials: Plexiglas block, 1" square, ½" thick; ¼" aluminum angle lengths; nuts, bolts, washers, and solder lugs.

Frequency	Element length	0.221 λ spacing	Reflector length
145.9 MHz	18"	not used	not used
432 MHz	5¼"	6 3/4"	6"

Table 1. Dimensions for the elements.

Social Events

from page 26

Woodbridge Wireless, Inc. Attractions will include: QSL bureaus—learn how they work; FM clinic—sensitivity, deviation, and power checks; and CW proficiency awards—5 wpm and up. Indoor exhibit space is available for dealers. For Information, contact Sam Lebowich, 9512 Sudley Manor Dr., Manassas VA 22110. Talk-in on 146.37/.97, 147.84/.24, and CB ch. 1.

MILTON PA
JUN 4

The 7th annual MARC (Milton Amateur Radio Club) hamfest will be held on June 4, rain or shine, at the Allenwood Firemen's Fairground located on US Rt. 15, 4 miles north of Interstate 80. The time is from 8 am to 5 pm. Advanced registration for sellers is $2.50; the gate is $3.00; XYLs and children free. There will be a flea market, an auction, contests, cash door prizes, a free portable and mobile FM clinic, and supervised children's activities. Indoor area available; food and beverages at reasonable prices. Talk-in on 37/97, 34/94, and 52 simplex. For further details, call or write Jerry Williamson WA3SXQ, 10 Old Farm Ln., Milton PA 17847, (717)-742-3027. Camping and motels nearby.

PORTLAND ME
JUN 10

The Portland Amateur Wireless Association will hold an amateur flea market on June 10, 1978, at the Red Coach Grill in Portland, Maine. Tables will cost $2.50 (shared tables are invited), and donations of $0.50 will be taken at the door. Donations will go toward door prizes which will be awarded during the day. The door will open at 9:30 am. The Red Coach is located at Exit 8 of the Maine Turnpike. Talk-in on .13/.73 or .52/.52 direct. For further information, write to P.A.W.A., PO Box 1605, Portland ME 04104.

WILLOW SPRINGS IL
JUN 11

The 21st annual ABC hamfest will be held on Sunday, June 11, 1978, at the Six Meter Club of Chicago, Inc. The location is southwest of Chicago at Santa Fe Park, 91st and Wolf Road, Willow Springs, Illinois. Advance registration is $1.50. It will be $2.00 at the gate. There will be a large swap row, color TV, and many other goodies. Picnic grounds and plenty of parking space will be available. Come see the displays in the pavilion and attend the AFMARS meeting. Talk-in on 146.94 FM or WR9ABC 37-97 (PL2A). Get advance tickets from Val Hellwig K9ZWV, 3420 South 60th Court, Cicero Il 60650.

NEWBERRY MI
JUN 11

The S.P.A.R.K. annual swap and shop will be held from 9:00 am to 4:00 pm at the Pentland Township Hall, on M-28, on Sunday, June 11, 1978. Plenty of tables and chairs will be available, plus a nonsmoking area. There will be demonstrations of hobby computers and how they work, an MARC discussion, a Q.C.W.A. area for get-together and visitation, a YL and XYL craft table and a white elephant sale. Bring your QSL card for display and judging for prize. A bake sale will be sponsored by S.P.A.R.K. YLs and XYLs. Ample parking facilities with attendants—easy unloading (feel free to ask a S.P.A.R.K. member to assist you). Food and beverages served throughout the day. Exhibitors may set up Saturday afternoon and evening. Security will be on duty in the building throughout Saturday night to eyeball. Donations will be $2.00 for registration and drawings. Tables will be $1.50 and $2.50. All activities are designed for family participation. For advance tickets,

reservations, and information, contact Larry Baine W8GBR, Box 67, Newberry MI 49868, (906)-293-8651, R. J. Beach W8NBJ, 115 E. Avenue "A", Newberry MI 49868, (906)-293-8425, or Herb Miller W8SUN, RFD 1, McMillan MI 49853, (906)-586-9661.

GRANITE CITY IL
JUN 11

The annual hamfest of the Egyptian Radio Club W9AIU will be held at the club grounds on Sunday, June 11, 1978.

MONROE MI
JUN 11

The Monroe County Amateur Radio Club's annual swap and shop will be held on Sunday, June 11, at the Monroe County Community College, Monroe, Michigan, from 8 am till 4 pm on Raisinville Road off M50. Talk-in on 146.13/73. $1.00 donation at the gate. Free tables and trunk sales. Plenty of refreshments.

AKRON OH
JUN 11

The Goodyear Amateur Radio Club will hold its 11th annual hamfest and family picnic on Sunday, June 11, at Wingfoot Lake Park from 10:00 am to 6:00 pm. The park is southeast of Akron on County Road 87 near Rte. 43. There will be five main prizes, plus many others, ample parking, shelters, picnic facilities, kids' play areas, and refreshments. Sorry, no overnight parking. Flea market and display space is free to ticket holders. Family donation is $2.50 in advance, $3.00 at the gate. For details, write Don Rogers WA8SXJ, 161 S. Hawkins Ave., Akron OH 44313, or phone (216)-864-3665.

SALT LAKE CITY UT
JUN 17

The Utah Council of Amateur Radio Clubs will sponsor a statewide ARRL hamfest at the Talorsville Park in Salt Lake City on June 17. Activities will include an ARRL forum, MARS meetings, an ATV forum, a TTY forum, a radio control demonstration, a VHF-UHF weak signal forum, an OSCAR demonstration, a personal computer forum, and a search and rescue forum. Also on the program are contests, including CW, transmitter building, antenna efficiency, transmitter hunts, home brew and treasure hunts. Other activities planned are dealer displays, swap tables, movies, QSL board, ladies' and kids' activities, a hot-air balloon demo, a barbecue, door prizes, two meter crystal swap, and an equipment auction. Camping, trailering, and motel facilities are close by. Preregistration is $3.00 for adults and $1.00 for kids under 13. Inquiries and preregistration fees should be sent to the Utah Council of Amateur Radio Clubs, PO Box 18563, Salt Lake City, Utah 84118.

PORTAGE IN
JUN 18

The fifth annual "Dad's Day" hamfest, sponsored by the Lake County Amateur Radio Club, N.W., IN, will be held on June 18 from 8 am till 5 pm. There will be food, drink, door prizes, and fun. It will be held at the Izaak Walton League picnic grounds in Portage, Indiana, 30 minutes from Chicago. Take I-94 to Indiana 249, Portage exit, go north ½ mile, and turn right at the hamfest gate. Overnite camping—no hookups. Talk-In on 146.52 or 147.84/.24, W9LJ-WR9AMU. Tickets will be $2.00 at the gate or $1.50 in advance. Send check to: Tickets, PO Box 348, Griffith IN 46319.

BARNESVILLE PA
JUN 18

The Schuylkill Amateur Repeater Association will sponsor a hamfest on Sunday, June 18, 1978, rain or shine. Gates will open at 9:00 am. The hamfest will be held at Lakewood Park, Barnesville PA, along Route 54, 3 miles east of Exit 37 on Interstate 81. Talk-in on 147.78/18 and 146.52 simplex. Registration is $2.00; XYL and children are free. Amusement rides, picnic tables, and refreshments available on the park grounds. Large indoor and outdoor flea market area. For more information, write Carl H. Zimmerman

W3EEK, RD #2, Box 580, Tamaqua PA 18252.

FREDERICK MD
JUN 18

The first annual Frederick Amateur Radio Club of central Maryland hamfest will be held on Sunday, June 18, 1978, at the Frederick fairgrounds on East Patrick Street, Frederick MD. There will be prizes, exhibits, and demonstrations. Food and drink (country cooking) will be available. Grounds open at 6 am for commercial displays and at 8 am for general admission (YLs and children free). Main prize drawing at 2 pm. Inside and outside tables available, as well as tailgating. Talk-in on 146.52, 13/73.

ORCUTT CA
JUN 18

The Satellite Amateur Radio Club will hold its annual swap/funfest and Santa Maria barbeque on Sunday, June 18. Join us for the best steak and biggest hamfest in the west. Fantastic prizes! Swap tables available. Try the all-you-can-eat dinner for $6.00 for adults and $3.00 for children under 12. Contact Tom Geiger W2KVA/6 at (805)-925-0398, or write to Swapfest, PO Box 2531, Orcutt CA 93454.

JACKSONVILLE IL
JUN 18

"The little hamfest with a lot of prizes and good eyeball QSOs" will be held on June 18, 1978, at the Morgan County Fairgrounds. Talk-in on 146.40/147.00 W9TZL/9. Tickets in advance are $1.50 each or four for $5. For information, write to JAARC, Box 571, Jacksonville, Illinois 62651. You need not be present to win.

RAPID CITY SD
JUL 1-2

The annual South Dakota hamfest will be held on July 1 and 2, 1978, at Surbeck Center on the campus of the South Dakota School of Mines and Technology, Rapid City, South Dakota. There will be technical forums, an ARRL forum, a flea market, and industrial tours. The grand prize will be a Kenwood TS-520S; the preregistration prize will be a Kenwood TR-7500. Admission is $4.50 in advance (before June 1) or $5.00 at the door. Plan to include this on a vacation to the Black Hills for the July 4th weekend. We recommend early reservations for accommodations. For more information and/or assistance with reservations, write to Black Hills ARC, Box 1014, Rapid City SD 57709.

CUMMINGTON MA
JUL 8-9

The Northern Berkshire Amateur Radio Club's hamfest will be held on July 8th and 9th at the Cummington Fair Grounds, Cummington, Massachusetts. There will be free overnight camping, technical talks, demonstrations, and dealers. The flea market will cost $1. Admission will be $4 or, with spouse, $6. Advanced tickets are $3 and $5. For information write: Hildy Sheerin WA1ZNE, 89 Greylock Terrace, Pittsfield MA 01201.

INDIANAPOLIS IN
JUL 9

The Indianapolis hamfest will be held on Sunday, July 9, 1978. The gates will open from 6:00 am to 4:30 pm. The place is the Marion County Fairgrounds, S.E. corner, in Indianapolis, Indiana. There will be professional commercial exhibiting, a covered flea market, and an unlimited outside flea market. Overnight camping facilities with hookup are available. For information, write to Indianapolis Hamfest, PO Box 1002, Indianapolis IN 46206.

ESSEX MT
JUL 15-16

The International Glacier-Waterton Hamfest will be held on July 15-16, 1978, in the West Glacier Area, Montana. The location will be at the Three Forks Campground, 10 miles east of Essex MT on U.S. Highway 2. Registration begins at 9:00 am MST.

BOWLING GREEN OH
JUL 16

The Wood County, Ohio, 14th annual Ham-a-Rama will be held on Sunday, July 16, at the fairgrounds in Bowling Green (just off I-75). Gates open at 10:00 am. Admission and parking are free. Tables are available for $3.00 or 8-foot spaces for $2.00 (advance table or space rental to dealers only). Trunk-sale space and food will also be available. There will be a main prize drawing and lots of door prizes. K8T1H talk-in on 146.52 simplex. Tickets are $1.50 in advance, $2.00 at the door. Write to Wood County Amateur Radio Club, c/o Eric Willman, 14118 Bishop Road, Bowling Green, Ohio 43402.

MARSHALL MO
JUL 23

The Indian Foothills Amateur Radio Club, Inc., will hold its third annual hamfest on July 23, 1978, in an air-conditioned

Continued on page 175

Cushcraft Does It Again!

—their new tribander is a winner

David B. Perrin K1OPQ
RFD #1, Tyler Dist.
Contoocook NH 03229

Now that we (my family and my beam) have survived the winter, it is time to rebuild, replace, or at least discuss putting up a new antenna. For those on the low bands, this may mean a new beam. Whether you buy or build depends on many things—such as amount of time, availability of necessary antenna designing equipment, mechanical knowledge of assembling a beam, and hardware and machining equipment to make brackets and element and boom supports.

A year ago, I found myself in this position: My four-year-old three-element tribander, which had been up for two years at my QTH, had transformed itself into a rotatable dipole by winter's end. What was left of it could not handle more than 1 kW PEP. Thinking of alternatives, I quickly dispelled the possibility of separate beams—they would be too expensive, my 40-foot self-supporting tower wouldn't handle the mass, and I didn't want to create a landmark, just a good antenna for 20, 15, and 10 meters. Although I would like to try a quad, I still don't believe that a quad can last as well as a beam. (I suspect, though, that it will outperform a beam while it's up and working.)

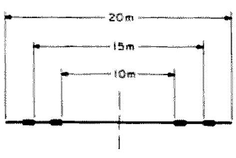

Fig. 1.

Since I've had three triband beams, which were up forty feet and supported in a variety of ways at three locations, since 1961, I knew what I wanted. The new beam would have to meet the following requirements:

1. reasonable price;
2. more rugged boom-to-mast and boom-to-element supports;
3. able to withstand the New Hampshire ice, wind, and snow;
4. uncomplicated design;
5. use of locally available hardware;
6. ability to adjust swr on each band separately;
7. single line feed;
8. competitive specifications with other triband beams;
9. 2 kW PEP power capability (may be needed someday);
10. good performance on all three bands;
11. ability to stay up and together;
12. good customer service when needed.

The decision not to design and build a triband beam was easy—I didn't have enough time. There are things other than antennas in life and, from what the XYL and IRS say, other than ham radio, too.

Cushcraft has designed a four-element triband beam with impressive specifications, complete with balun and a reasonable price. I compared and reviewed specifications and then visited the new Cushcraft plant in Manchester NH to check the various aspects of design and construction which concerned me. The beam looked good on paper. The construction was as rugged as more expensive antennas and it was simple—all standard parts and proven ideas. The decision was made.

My new Cushcraft ATB-34 (3 bands, 4 elements) arrived by UPS in early September. The delivery man must have been tired—he claimed it was over fifty pounds. However, the manufacturer had assured me that the total package was designed realizing weight and size limitations in shipping.

Taking a tip from building kits, when I opened the package, the first thing I did was check for all the parts, to the last bolt—no problem. Then I made the assembly area off limits to anyone without a ham license to avoid losing parts. The traps come not fully assembled, so you can get a look at this part of the design. With my other beams, the traps had been just bumps, keeping the design a total secret.

Assembly of this 18-foot boom antenna is no problem, but I do have a few comments. The instructions say that you don't need a tape measure to assemble it. I say you do—who can make an antenna without a tape measure? Make certain that you read, and understand, the instructions before you begin assembly. One shortcoming is that the various pieces for each of the elements are not color coded, packaged separately, or in any other way kept separated from other ele-

ment pieces. It's confusing, so first check each trap (they are coded), measure all element pieces for each element, and check these lengths with the parts list. The parts list does tell you the length and diameter for each part of each element.

Once the pieces were sorted so that I knew which element I was assembling, everything went together fairly smoothly. When the elements were finally on the boom, I made certain that they were all in the same plane by eyeballing the elements from the end of the boom. I figured out the placement of the boom-to-mast support by attaching a rope near the center of the boom, lifting the antenna off the ground, and adjusting the rope to find the exact center of gravity. The boom-to-mast plate was centered at this point. Next, I carefully leveled the entire antenna and adjusted this plate to be perpendicular to the driven element by using a small level. Before getting the antenna to the top of the tower, check to see that the U-bolts and V-blocks for the mast will all line up and fit through their holes in the boom-to-mast plate. A few taps on the U-bolts with a soft-faced persuader (mallet) should do it.

With the beam completely assembled, connect an swr bridge at the balun and connect the length of RG-8/U to your exciter. Lean the beam, with the boom vertical (or close to it), up against your tower or house. Have the reflector supported off the ground on a couple of wooden chairs. Now, go get a beer and call your friends. Load the rig on your favorite portion of 10 meters, and adjust the length on each side of the driven element, making it equal to the first set of traps, until the swr is as low as it will go. (See Fig. 1.)

Usually, the length will be close, but you can get the swr closer to 1:1 if you try. Then load up your rig on 15 meters and adjust the length of the driven element between the two traps. Make sure that the element sections on each side of the boom are adjusted evenly. Next, load up on 20 meters and adjust the length of the driven element beyond the second trap to the end of the element. Go back and check the swr on each band, and then check all mechanical and electrical connections. Now you are ready to install the beam in the air.

At 42 pounds, this beam is not light, nor is it small, so don't try walking it up your tower. I raised it using a homemade gin pole and tied it off so I could attach it to the mast and not have to support the weight of the antenna. It went up more easily than I expected, but that was because I forgot to invite Murphy. When raising any antenna, think safety—it's not worth the risk not to.

Once this beam was up, I realized in short order that it would outperform any of my previous beams. The directivity is considerably sharper. Even at 8000 miles or better, a swing of 20° will cancel DX. The front-to-back ratio, at around 25 dB, and front-to-side ratio are excellent . . . ah, to be able to swing the antenna and QSB the QRM without QSYing. The beam is at a modest height, but it outperforms my wire antenna at fifty feet by 30 dB on receive. This beam works very well, though I have no figures, since my reference antenna isn't isotropic and it wouldn't be fair.

At this point, I question whether a larger triband beam would be worthwhile. Perhaps I'll try one this summer, just for the fun of it, when I finish the 90-foot tower. ■

Jerrold Swank W8HXR
657 Willabar Drive
Washington Court House OH 43160

The S-Meter Bender

—*W7DND's magic antenna*

"Unique" means one of a kind. Many things are loosely called unique, but I believe that this antenna is really one of a kind. It belongs to Tom Erdmann W7DND of Bremerton, Washington.

Tom Erdmann, with one 40 meter vertical mounted on the corner of the boom clearly shown.

Although the antenna is usually pointed down the west coast, once in a while Tom turns it to the east. When he does, many an S-meter swings to the right toward the pin on 40 meters.

A great many hams have asked about the antenna, and, to some, Tom has sent photos. Most of them, however, don't really have a clear conception of what the array really is — only what it does to their S-meters. I have, therefore, asked Tom for photos and a clear description of the antenna, and this will give you all the information you need.

Basically, it is a pair of phased vertical antennas with a pair of parasitic reflectors, spaced about 65′ apart broadside, with the reflectors 20′ behind the driven pair.

Fig. 1 shows the circuit information. The antenna was originally voltage fed, and the box shown in the photos contains the tuner for protection from the weather. Lately, however, Tom has changed to current feed, thus eliminating the tuner. This circuit is shown in Fig. 2.

He has added six ele-

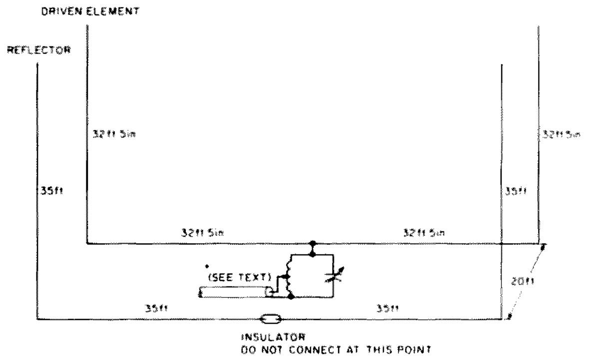

Fig. 1. 40 meter four-element vertical beam, voltage fed.

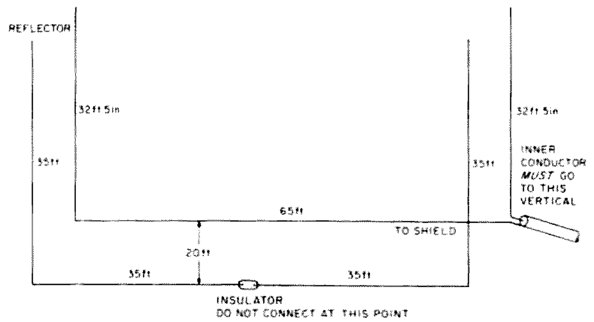

Fig. 2. 40 meter four-element vertical beam, current fed.

ments on 15 meters, and this array is shown in Fig. 3.

Tom is shown standing beside his creation, which will give you a feeling of its size.

The boom is made of 2 × 4s, was built in 1961, and has gone through winds up to 85 miles per hour. The array weighs about 900 pounds and is supported from the top of the 32′ telephone pole by ten nylon ropes. At the bottom, it rests on a bearing, which Tom keeps well greased.

It is rotated by hand and has a 12′ 2″ × 3″ wooden piece which serves both as a chock to prevent rotation in the wind and as a handle to raise up and rotate the array.

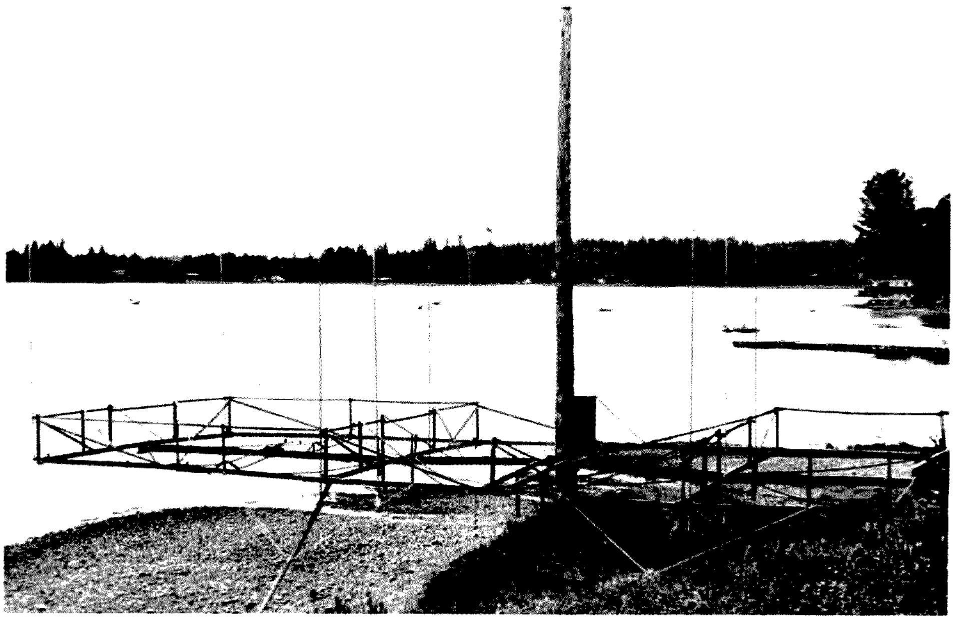

The water in the background is Puget Sound. The beam is pointed south and the camera is facing south. The four 15 meter verticals shown have been changed to three (see text).

It is not likely that many hams will care to build such a heavy boom for an antenna, but the same principles used here can be applied to wire and masting arrays in a fixed position.

This will be good news for those who cannot find the space or energy for buried ground radials. Since the connecting wire is a half wave, it acts as a counterpoise for each antenna, completing the array.

You have probably noticed that the photographs show four elements in each of the 15 meter beams. This was the way the array was originally set up. However, the angle was too low, so Tom removed one of the directors. Thus, there are three elements in the text and the drawings.

His new array will be four vertical three-element beams on 15 meters.

He is planning to remove the four 40 meter antennas and replace them with two more three-element 15 meter arrays, making 12 elements on 15 meters, which is now his favorite band.

The 15 meter antennas are half-wave verticals voltage fed at the bottom.

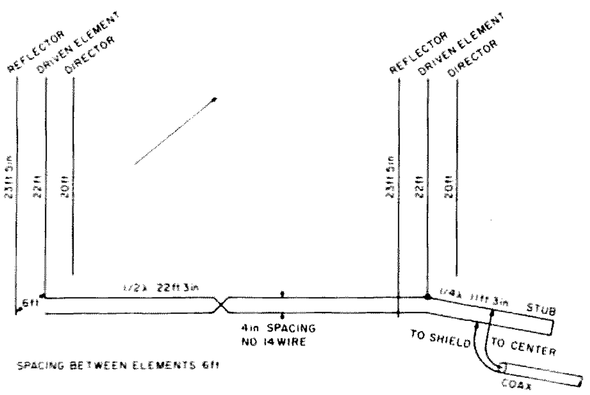

Fig. 3. 15 meter six-element vertical beam, half-wave end-fed elements.

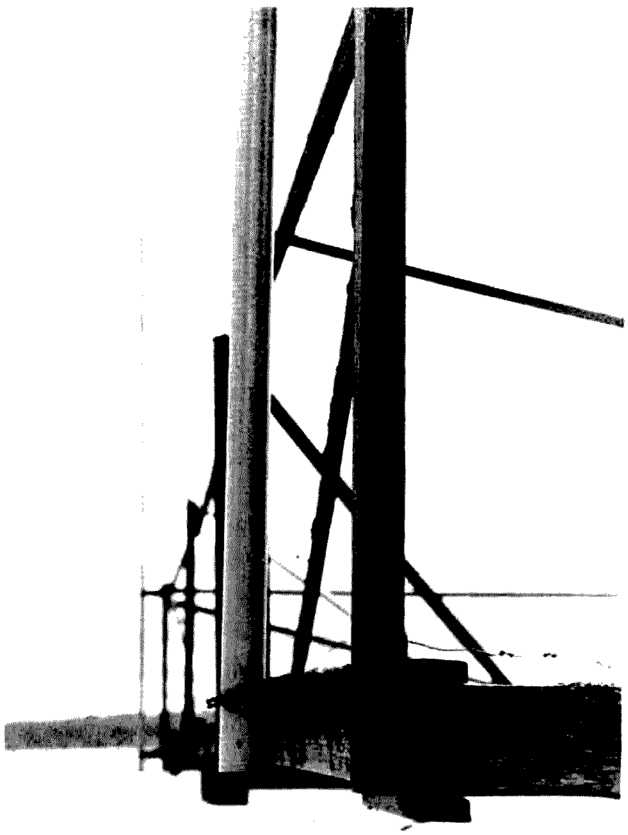

Close view of a forty meter vertical showing how they are mounted on standoff insulators.

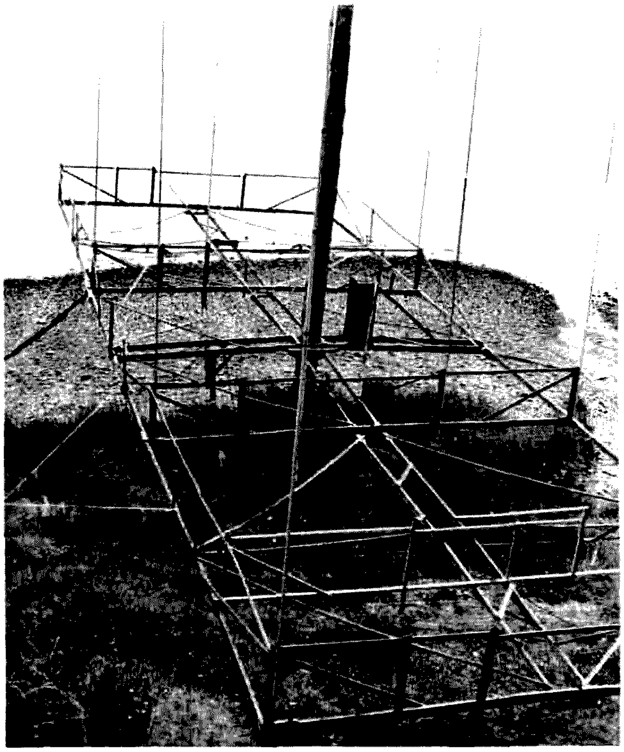

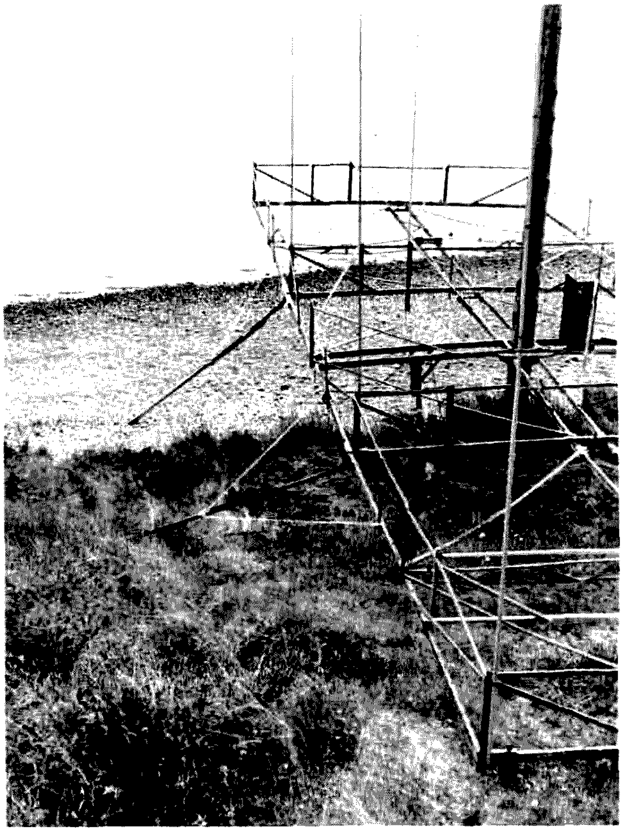

This photo was taken from the roof of Tom's home. The camera is facing east, with the boom facing south. The box contains the tuning unit to protect it from the weather. The ten nylon lines supporting the boom are shown in this photo.

Close-up showing 12' 2 × 3s, which prevent rotation by the wind and which are used to turn the boom by hand.

The bearing is kept well greased and supports the entire array with the aid of the ten nylon lines.

If you look closely in one of the under-the-boom shots, you can see the quarter-wave stub used to feed the 15 meter antennas.

The manner of support for the 40 meter aluminum verticals is shown in a close-up.

This array is about 3' off the ground, and there is no ground connection, nor are there any ground radials. The horizontal wire between the two antennas is the counterpoise system.

Tom refers to the antenna as an "upside down bobtail," and there is a great similarity between this antenna and a full bobtail.

The gain is probably in the neighborhood of 8 dB. The angle is low and the beam width is narrow, making the antenna better for DX than a single vertical or even a yagi beam, unless the beam is at least a half wave high and three

elements.

Of course, one of the chief advantages is elimination of the need for a tower.

You may notice that there is moss on some of the 2 × 4s after 16 years of use.

The coil used for the voltage-fed version in Fig. 1 has 17 turns spaced 3/16" and is 3-1/4" in diameter. Since there is high voltage across the coil, the capacitor spacing should be the same as in the capacitor in your tank circuit. The capacity is about .001 uF.

The horizontal wires in the reflector are not connected at the center.

The lead from the coax is tapped for a 50-Ohm match, and the capacitor is tuned for maximum voltage at resonance at the feedpoint. Tune for maximum brilliance in a 1/4-Watt neon bulb. There is no ground at the antenna, since the shield of the coax furnishes a ground at the transmitter.

Tom's original antenna was made of 32' bamboo poles with #14 wire attached as radiators, but it is now made of aluminum masting. This may give you some ideas. The supporting pole is 32' high. The nylon ropes are fastened five to each side.

The most notable feature of this antenna is the complete lack of need for ground radials or counterpoise.

It would be rather easy to make a fixed array with pipe supports for the four antennas and stretch the horizontal wires between the supports three feet above the ground, so you could mow the yard under them.

The complete antenna would take an area of 65' × 20', which isn't too hard to get in a yard. If you live in a corner of the USA, the antenna could be slanted across the country for complete coverage with no rotation.

Tom said that he noticed no difference in results between the voltage feed and the current feed.

All horizontal sections are #14 wire. They are out of phase and do nothing for the signal. The vertical sections are self-supporting aluminum and are in phase.

Tom sent me a tape which he received from Graham Knight, a listener in Aberdeen, Scotland. The signal was quite good on 40, even though the beam was headed at 90°, which is straight east, and Scotland is about 25° from Bremerton. It would have been much better if the beam had been headed toward Scotland.

They say a picture is worth ten thousand words, so I have used photos and diagrams for most of my explanation. I hope this will interest many hams who will see that there are ways to achieve results other than the most usual and most expensive ways.

An antenna is the cheapest way to get a good signal out, and it also works on receive, which is not true of a linear. So plan a little and save a lot. ■

A view from under the boom, with the camera facing north.

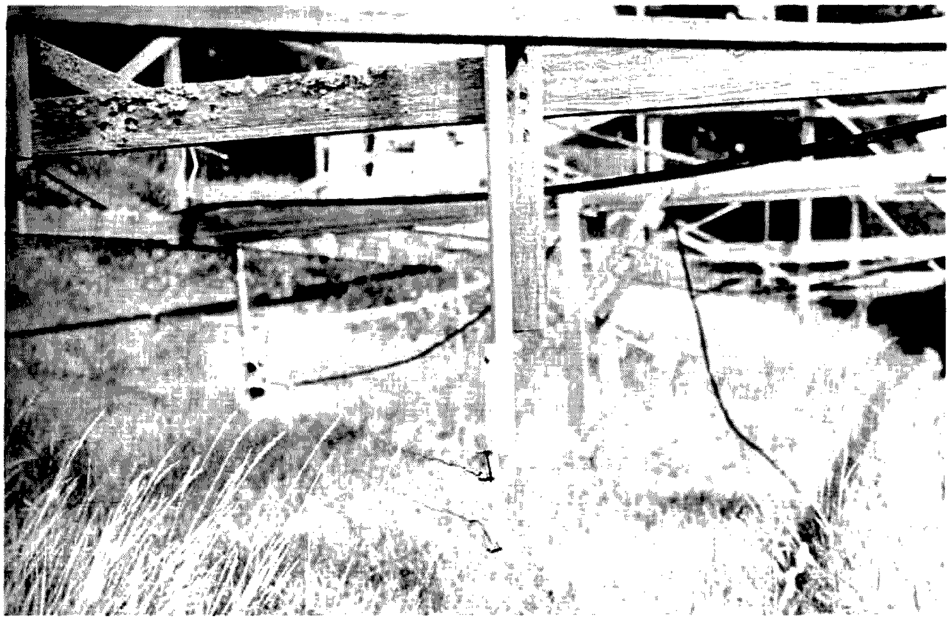

Quarter-wave stub at the bottom of one of the 15 meter elements. Notice the moss on the 2 × 4 at the upper left.

Amazingly Simple Log Periodic Antenna

—an 8-lb. mini LP for 20m

Photo by Dennis Lopez

Ted Robinson K1QAR
General Delivery
Block Island RI 02807

Experimenting around with some mobile whips, I found that four pairs of them on a 10½ foot boom could give usable directivity using log periodic feed. This antenna weighed 8 lbs., about half as much as the smallest commercial 20 meter beam.

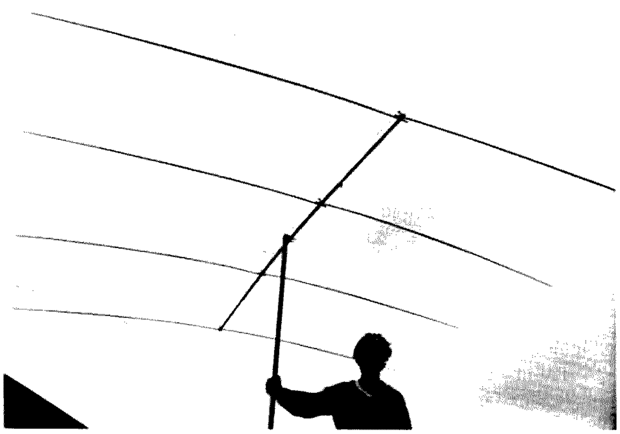

While the yagi is the most popular way to go, for an ultrasmall antenna, the LP seems better. It is broadbanded, covering all of 20, which is something a miniature yagi couldn't even begin to do. Unlike the yagi, the LP is tolerant of super close spacing, losing only 1-2 dB. Finally, the LP's all-driven configuration avoids the problem of insufficient coupling between the tiny mobile whip elements.

Construction is straightforward. Eight solid-core fiberglass fishing-pole blanks, 6′ long, 3/8″ at the base, and tapering to 1/8″ at the tip, are obtained from a tackle supply house (these dimensions are not critical). Starting at the tip, wind #20 enameled wire, with adjacent turns touching, for about 18″. For the next 18″, the pitch gradually increases to 1/4″ between turns. At this point, switch to #18 wire, soldering the connection. Pitch increases smoothly

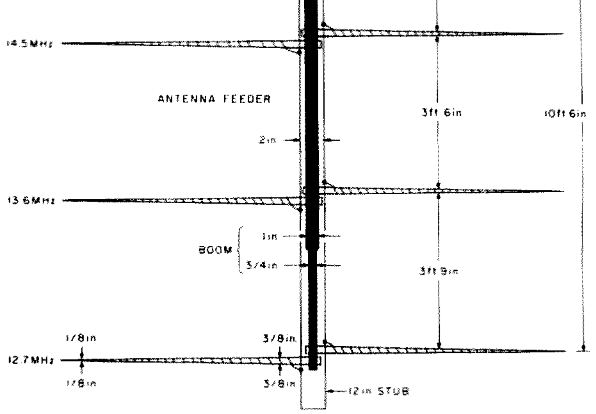

Fig. 1. 20 meter mini-log periodic beam.

from 1/4" to 3/4" as the winding is continued to the base. Using a grid-dip oscillator, add or subtract turns from the tip to resonate to the nearest of the following frequencies: 12.7, 13.6, 14.5, and 15.5 MHz. Making sure to always wind in the same direction and varying the amount of wire appropriately, fabricate all eight whips with two resonant to each frequency. The easiest way to wind is rotate the pole and feed wire onto it.

The boom is made from 6' of 5/8" aluminum with 3' of 1/2" aluminum tubing telescoped in either end. Pairs of holes the same size as the pole bases are drilled in the boom for element mounting, observing the following spacing: 45", 42", and 39". An antenna feeder supported on top of the boom, consisting of #16 wire spaced 2", completes the array.

Varying this spacing will vary the impedance of the antenna. Normally a 75-Ohm matching section into 50-Ohm line will give good results. Remember that adjacent elements get fed out of phase and that the lower frequency whips go with the wider spacings. Feed is to the high-frequency end, and a 12" stub is attached to the low-frequency end of the antenna feeder.

With such a small antenna, it was quite easy to get it up 65 feet on a mast made from scrap pipe, which was clamped to the side of the house next to a window for hand rotation. With this setup, measurements indicated an f/b of 5-8 dB, an f/s of 10 dB, and a low swr across the band. Gain was calculated to be 4-5 dB. Compared with other beams on the air, performance seemed to bear this out. A bonus was an apparent 20 dB f/b for power-line noise. ■

Social Events

from page 164

multipurpose building at the Saline County Fairgrounds in Marshall, Missouri. There will be flea markets for the OM and XYL (tables—$2.00 for first table; $1.00 for each additional table). Many prizes are to be awarded and there will be old and new equipment displays. Campgrounds (no connections for utilities) are available. The timetable is 8:00 am—registration; 8:00 am to 10:00 am—breakfast rolls and coffee; 11:30 am—lunch—all you can eat; 2:30 pm—drawing. Tickets are $2.00 in advance, $2.50 at the door. For information and tickets, write James H. Little WDØBPG, 405 East Rosehill, Marshall, Missouri 65340. Talk-in on 52, 28/88.

SALEM OH
JUL 23

The Kent State Salem Amateur Radio Club will hold a hamfest on July 23, 1978. The door prize will be a Ten-Tec #540 transceiver, courtesy of KenMar Industries; there will be many others for the whole family as well as a hot air balloon, a ramp for wheel chairs, and plenty of free parking. Wives and kids under 12 free. XYL drawing and recreation facilities available on beautiful campus. Open at 9 am; main drawing at 3 pm. Admission: $2.00; flea market: $1.00; tables: $5.00. Talk-in on 146.10-.70. For information, write W8JPG 147.27, Milhoan Electronics, 1128 West State Street, Salem OH 44460; (216)-337-9275.

INDIANAPOLIS IN
JUL 26

The IEEE Computer Society of Central Indiana and the Central Indiana section of IEEE will sponsor the third annual Indy Microcomputer Show on Wednesday, July 26, 1978, from 11:00 am to 9:00 pm at the Holiday Inn located at I-70 and Shadeland Avenue in Indianapolis. There will be exhibits, demonstrations, and technical seminars addressing the engineering, industrial, scientific, business, and personal applications of microcomputer systems.

OKLAHOMA CITY OK
JUL 28-30

Central Oklahoma Radio Amateurs will present Ham Holiday '78 on July 28, 29, and 30, in the Lincoln Plaza Forum, 4345 North Lincoln Boulevard, Oklahoma City. Preregistration closes July 14 with a fee of $3.00; $4.00 at the door. Noncommercial flea market tables are free in the ten-thousand-square-foot flea market area. Commercial exhibitors contact K5MB at (405)-787-9545 or 787-9292. Technical programs are scheduled throughout the hamfest. Many prizes will be given away, including a special preregistration prize. Mail preregistrations to Ham Holiday '78, PO Box 14604, Oklahoma City OK 73113.

FT TUTHILL AZ
JUL 28-30

The Amateur Radio Council of Arizona will present the annual Ft. Tuthill Hamfest on July 28, 29, and 30, 1978. Come on out in the cool pine country of Arizona, and join our western barbeque, prize drawings, and tech sessions. For further details or pre-registration forms, contact PO Box 11642, Phoenix AZ 85061.

KINGSFORD MI
JUL 29-30

The 30th annual U.P. hamfest, cosponsored by the Great Northern Repeater Association and the Mich-A-Con ARC of Iron Mountain-Kingsford, Michigan, will be held on Saturday, July 29, and Sunday, July 30, 1978, at the Dickinson County Armory on M-95 in Kingsford, Michigan. Registration will begin at 9:00 am on both days. Tickets are $2.50 in advance and $3.00 at the door. Saturday night banquet tickets are $6.50, and reservations should be received by July 1. Daily activities include: U.P. net meeting, U.P.R.A. meeting, YL net meeting, ARRL director's meeting, computers, DX and contests, slow scan, satellite, RTTY, moonbounce, FAX, 2m SSB, a swap and shop, and a special discussion on "Antennas—Legal Aspects" by George Goldstone W8AP, vice-director of the Great Lakes Division. Planned family activities will be held both days. Plenty of parking is available. Prizes galore! Talk-in on 146.25/.85 and 3922. For information, write UPHAMFEST 78, Box 2056, Kingsford, Michigan 49801.

HOUSTON TX
AUG 4-6

On August 4, 5, and 6, 1978, the Houston Echo Society will host the annual Texas VHF-FM Society Summer Convention in the Galleria Plaza Hotel, just off interstate loop 610 at Westheimer Rd. While primarily devoted to the VHF-FM spectrum, attractions will also include microprocessors/microcomputers, the annual Texas champion hidden transmitter hunt, OSCAR communications, and much more, covering all phases of amateur radio. There will be forums conducted by both the ARRL and the FCC. A banquet/dance is planned for Saturday night. The featured speaker will be William A. Tynan W3XO, editor of "The World Above 50 MHz" column in *QST*. Exhibitors will be displaying their wares all day Saturday and Sunday. Several excellent prizes will also be given away. The main prize will be the choice of an HF rig or an allmode VHF rig, with the second prize being the rig which is not given away as the main prize. There will also be a preregistration prize as well as hourly door prizes. More information can be obtained by writing to: FM Society Summer Convention, PO Box 717, Tomball, Texas 77375.

MACKS INN ID
AUG 4-6

The 46th Annual WIMU (Wyoming, Idaho, Montana, Utah) Hamfest will be held on August 4, 5, and 6, 1978, at Macks Inn, Idaho, 25 miles south of West Yellowstone, Montana. Talk-in on 146.34/94 and 3935. Advance registration is $6.00 for adults and $2.00 for children, before July 25th, 1978. Late/regular registration is $7.00 and $2.50. There will be a special prize drawing for preregistration. Please send preregistration to: WIMU Hamfest, 3645 Vaughn Street, Idaho Falls, Idaho 83401; phone (208)-522-9568.

PETOSKEY MI
AUG 5

The 3rd annual Straits Area Radio Club swap and shop will be held on Saturday, August 5, at the Emmet County Fairgrounds, Charlevoix Avenue, Petoskey, Michigan, from 9 am to 3 pm. Talk-In on 146.52. Food services, prizes. Tickets will be $1.50 at the door. Campsites nearby. For information, write to SARC in care of W8IZS, Box 416, Pellston MI 49769.

JACKSONVILLE FL
AUG 5-6

The Jacksonville Hamfest Association is happy to announce the 5th annual

Continued on page 213

Disguised Birdhouse Vertical

—give the birds a hot foot with this secret antenna

Leland H. Agard K5LUW
Route 5, Box 735
Starkville MS 39759

You've heard of the "bird cage antenna," the "vertical antenna," and the invisible "apartment dweller's antenna," but the antenna I am about to describe is just the thing you need if you live in an apartment or a rental house where the landlord will not let you put up an outside antenna. Also, if the sight of large antenna arrays automatically makes your neighbors' television sets start acting up and you are tired of those annoying phone calls every time you start operating, maybe what you need is a disguised antenna that is a super DX antenna that also puts out a respectable stateside signal.

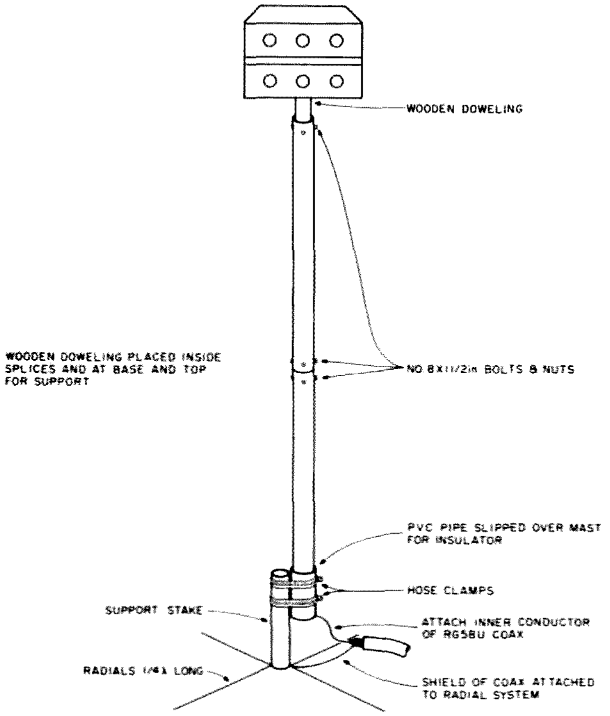

Fig. 1.

I am sure that you have heard the old saying that a vertical antenna radiates equally poorly in all directions, but you may be in for a surprise if you have never used one. The vertical is an amazing antenna and outperforms my dipole at forty feet on all occasions and with some very startling results. This is not the place to run down my log and list all the DX stations that I worked with this antenna, but I will say that my two-element 40 meter yagi is still in the box in the garage. I used this antenna in the 1976 sweepstakes and ran up a score of over 100,000 on forty meters to win my state. It seems to work great for short or long distances, and the point I am trying to make is, "Try it; you'll like it!"

My antenna was constructed for forty meters, but the antenna can be made for 20, 15, or 10 meters, also. Simply cut the length of the vertical radiator to a quarter wavelength for the center of the band you want to work and cut the radials this same length plus five percent.

The fact that a purple martin birdhouse appears at the top of the vertical is the main camouflage system. For all practical intents and purposes (as far as your neighbors are concerned), this is simply a birdhouse supported by a metal pole. Only you know that it is really an antenna for a ham rig.

Every one knows about purple martins. These are those wonderful little birds that spend spring and summer in the United States, raising their families of little purple martins. While they are here, their most beneficial contribution is the fact that each day they eat their weight in insects, and they are about the best mosquito eradicators known to mankind. There is no use ruining the ecology using pesticides when the purple martin will do the job much better and cheaper, while producing no unwanted side effects. After the purple martins have raised their families, they will return to central America during the fall and spend the winter there. Now the truly amazing fact is that, in the spring, the same birds will return to the same nesting place to raise another family, and the young that were born last year will return to the place of their birth to raise their families. In a couple of years, you will have a colony of purple martins that will keep your neighborhood insect free. About the only thing that purple martins require is a clear flyaway zone around the house they are nesting in. This works out very nicely because the same objects that annoy the purple martins will soak up rf like a sponge.

In the construction of the vertical antenna, the aluminum used was purchased at the local TV shop and is known as locking TV mast. It

is a painted aluminum tubing and cost $2.95 for a ten-foot section. I bought forty feet, cut three feet off one section, and joined it with three other sections to make a 33-foot vertical. I put a wooden doweling rod about a foot long at each joint, the base, and the top. The doweling was fastened to the mast with #8 x 1½" bolts and nuts through the mast and doweling. Two bolts were used at the top and bottom of each joint. Solder lugs can be used under each bolt and braid strapping used to jumper each joint to provide excellent electrical connections.

The type of purple martin house that you use is, of course, optional. These houses are advertised in Sears and other national mail-order catalogs and, in most instances, can be obtained locally. They come in both metal and wooden models.

The birdhouse is best attached to the top of the vertical using a floor-type pipe flange and a piece of doweling material about 18 inches long. The wooden dowel, of course, will insulate the birdhouse for the antenna.

Now here is the secret of how the birdhouse antenna works like an antenna and not like an rf choke. You will have to put in a ground system of quarter wavelength radials. These should go from the base of the vertical and stretch out like the spokes of a wagon wheel. Now I know you have heard of all the guys who just stick a ground rod in the ground and their vertical antennas work just fine. Don't you believe it! The ground rod is simply for lightning protection. Forty meter rf energy will only penetrate the earth to a depth of a couple of inches, so you must use a ground system, but this should be no trouble. A minimum of two radials will work, but, like other things, the rule is: the more, the better. Realistically, a minimum of four radials should be used, and eight will work better. Equal currents flow in the vertical and the radials, so the radials are a must.

On the radials, I had good luck with a shovel making a slit in the ground, pushing the radial in the slit, and then walking over the ground to cover the radial up. Others have had good results with simply laying the radials on top of the grass and letting the grass grow up over the radials. When the grass is cut, it forms a mulch layer over the radials, and, in about a month, the radials are completely covered.

The quarter wavelength vertical radiator has an impedance of about 30 to 35 Ohms but will present a good match to 52-Ohm RG-58/U coax without any matching devices. My vertical exhibits an swr of 1.5 to 1 at resonance and less than 2.0 to 1 at the band edges. This swr across the entire band is negligible in terms of rf loss.

For 40 meters, the antenna may have to be guyed if you experience much strong wind in your area. These guys can be made of nylon string and tied to existing trees or buildings. However, for 20, 15, or 10 meters, the length is short enough that the antenna will be self-supporting in most winds. The antenna can be made of any material that can be obtained locally at a reasonable price, such as downspout, conduit, etc.

The installation is completed by burying the coax coming to the building and then using your imagination to get the coax into the ham shack in an unnoticeable way.

All connections should be soldered and then coated with RTV bathtub sealer. The antenna will surprise you on 40 meters, and, if you need an antenna that no one will recognize as an antenna, then this is the one for you. ■

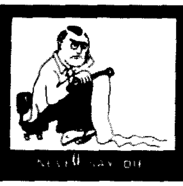

... de W2NSD/1

EDITORIAL BY WAYNE GREEN

from page 51

Royal Coach Inn . . . see you there.

HOW TO SELL AMATEUR RADIO

The secret to survival is to be needed . . . to be important. The small countries which make up the bulk of the votes at the International Telecommunications Union (ITU) do not, in the main, understand amateur radio. Those who do not confuse it with CB often think of it and put it down as mainly an American hobby.

Put yourself in the position of the king or president of a small country. Your shortwave broadcasting people are raising hell because they can't get a frequency which is in the clear to broadcast news and cultural programs. Businessmen are raising the devil because they find it impossible to get clear channels for communications between their offices and their trucks, warehouses, etc. Your phone service is lousy because there is a shortage of frequencies for that. With all these pressures, how much support is your government going to give to an American hobby group which wants to use these valuable frequencies for playing around? You got the picture?

Oh, we can talk all day about emergency communications, but a country with two hams is not going to get a lot of help in any emergency. That is irrelevant to them.

Sure, radio amateurs have invented and pioneered most of the communications techniques in everyday use. But these countries are not interested in more inventions—they want spectrum space and they want it right now and hang next year or ten years from now.

Radio frequencies can be rented and sold, so they are a nice source of income. When a single communications channel can earn over $1 million a year, why on Earth would a country want to just plain give that channel away to hams? That's nuts.

There are several reasons why these small countries should support not only the present ham bands, but help us to get more . . . and these are extremely important reasons for these countries. If we can get the leaders of these countries to understand the importance of amateur radio to them, we'll get our bands . . . and more.

So what are the benefits of amateur radio to emerging nations? First, there is their almost unbelievable need for local people trained in electronics and communications. Without amateur radio as a personal interest, it is very difficult to get people to take the time and effort it requires to learn electronics. Let's face it, there are a lot of easier ways of earning a living.

Without native people to help install, service, and operate the telephone, radio, and other communications systems, a country has to pay such incredible salaries to bring in Swiss and German technicians that they end up with very little communications. The whole world is going electronic—radio and computers, microwaves, satellites—without these modern systems, a country just can't grow and keep up with its neighbors.

Amateur radio clubs for the teenagers can spark the enthusiasm which will result first in hundreds and then thousands of hams, people interested personally in electronics and communications—the very best type of people for a growing country and an invaluable asset. A country should begin to see the first benefits from such a program within two years of its inception.

A Ham Trade Mission could encourage these emerging nations to set up a ham station in each of the youth centers, complete with a traveling teacher to instruct the prospective hams on a once-a-week basis. The investment for a country would be miniscule compared to the benefits. The Mission would cooperate to provide a set of rules and regulations which would be tailor-made for the country and which would encourage youngsters to get their ham licenses and progress. The Mission could also arrange for teaching materials for the prospective hams—in their native language.

The nice thing about it is that everyone involved would benefit. The countries would develop a low-cost supply of trained technicians and eventually engineers. The kids would have a fun hobby plus the opportunity to make their own way as far as they want in the world, an opportunity which is available to very few in these new countries. The ham manufacturers who participate would have the possibilities of greater sales of their equipment as these markets open. And amateur radio worldwide would benefit from having another country support it at the ITU, plus a lot more DX contacts.

One additional benefit for any small country is the unique ability of radio amateurs to promote their country. A Stanford study (distributed by the ARRL) showed that there are more people listening to radio amateurs on the shortwaves than to the shortwave broadcasting stations. Amateurs could have a significant effect on the tourist trade in a country, just by talking up the country and inviting anyone listening to come and visit. There is little correlation between government shortwave broadcasting and tourism, but hams do bring in their worldwide friends like a magnet.

Mounting a Ham Trade Mission is not going to be inexpensive. While it is true that in the long run such a Mission might benefit those who participate in it to some degree, so will all of the manufacturers benefit, for a developed ham market is anyone's game. There is good reason for every amateur manufacturer and dealer to support a Hambassador Trade Mission program. Without ham bands you have no business, and has anyone come up with any other plan for protecting bands?

Just between *73* and *QST*, I count about 230 different firms in the ham business who are advertising, and that's just for one month. If each of these firms put up $20 a week toward the Hambassador program, we would have $19,933 a month available for getting amateur radio going in the third world countries, and enough left over to do one whale of a job of lobbying in Washington and seeing to it that nothing like the linear amplifier disaster happens again.

If you think this is a good idea, you might drop a letter or QSL card to some of your favorite manufacturers and call your local ham dealer and see if you can get them to get behind such a plan. No firm that is in business can be hurt by $20 a week, and any firm that is too stingy to help get amateur radio over a very rough spot does not deserve your support.

The Amateur Radio Manufacturer's Association (ARMA) should, I think, include dealers in their group and solicit the funds to protect the future of amateur radio, whether it be to garner the votes of emerging nations at the ITU, to thwart the blundering of the FCC, or even to counter predatory attacks from the likes of a Cooper.

Since Jordan is one of the best examples of the value of amateur radio as a medium for the development of a technical body, I should think that a Mission would first go there and get familiar with the situation which was set up and how it worked. I would be surprised if King Hussein would not cooperate with such a group and perhaps put in a good word to help them meet at the highest levels in some other countries.

With that excellent background, the Mission would be on firm ground in talking with the leaders and telecommunications ministers of other countries. We might be able to find out from our State Department (and perhaps even from the CIA) what funds are available from the U.S. to back up a Mission . . . with such things as ham stations for youth clubs.

The effects of such a Mission could snowball. Even a few successes could be turned into triumph through public relations and promotion. Once a few countries have agreed that this is a good idea, it will be much easier to sell others on it, and such a movement could completely rewrite the present handwriting on the wall . . . which is exceedingly grim. The first few visits will be critical; from then on, less experienced teams could follow up and make sure that every voting country of the ITU is visited at a high level.

The important thing is to get started as quickly as possible . . . like this summer. If we wait much longer, many countries will have firmed up their WARC proposals. It is much easier to stay out of trouble than to try and get back out of it after you're in. Getting countries to change their minds, once set, is much more difficult than preventing the setting in the first place.

CONTESTS

from page 15

State. Object is for all stations outside the 7th W/VE call districts to QSO as many 7-land W/VE stations as possible in a maximum of 30 hours out of the total 36-hour contest period. The same station can be worked on each band.

EXCHANGE:

All W/VE stations (including KH6 and KL7) transmit RS(T) and state or province; foreign stations transmit RS(T) and serial QSO number.

SCORING:

On each band, 7-land stations get 1 multiplier for each of the 50 US states and 1 multiplier for each Canadian province. All others get 1 multiplier for each state or province worked in the 7th W/VE call districts (on each band). 7-land includes: Alaska, Arizona, British Columbia (Canada), Idaho, Montana, Nevada, Oregon, Utah, Washington, and Wyoming.

Power multipliers are as follows: 500 Watts dc input or more = multiplier of 1.00; 300 to 499 Watts dc input = 1.25; 100 to 299 Watts dc input = 1.50; less than 100 Watts dc input = 2.00.

Final score is total valid QSOs times QSO points times total sum of all multipliers times the power multiplier for your station. QSO points are 1 point per QSO for 7-land stations including other 7-land QSOs; all others score 5 points per 7-land QSO.

ENTRIES & AWARDS:

Certificates of performance will be issued to the top scores in each state, province, and country for single class operation. Certificates issued to top multi-op station in each W/VE call district. All entries must include a self-prepared log sheet with separate sheets per band. Each log must show freq, mode, date/time GMT, station worked, exchange sent and received, and points. Each entry must include a completed summary sheet; for stations with over 100 QSOs, a dupe sheet for each band must be submitted. Dupe sheets are self-prepared! All entries must include a business size SASE; foreign stations may enclose 2 IRCs. Deadline for entry is Aug.1. Mail entries to: NAS Whidbey Island ARC, Bill Gosney WB7BFK, 4471 40th NE St., Oak Harbor WA 98277 USA.

Summary sheets and contest rules can be obtained from the above address. Please include an SASE!

THE PONY EXPRESS CERTIFICATE

This award is being reissued by the Missouri Valley Amateur Radio Club, Inc. The certificate will be available to any ham working the HF bands. This certificate is not affiliated with any other organization. To qualify, US amateurs must work 5 MVARC members, then send 5 QSLs confirming contacts plus two 13¢ stamps. DX amateurs must work 3 MVARC members, then send 3 QSLs plus 1 IRC. All QSLs should be sent directly to the certificate manager: WBØ, PO Box 141 Station E., St. Joseph MO 64505.

Member stations to work are: WBØLVW, WØNUT, KØERD, WBØWXD, WBØVRB, WDØBBH, WBØMGQ, WØYVJ, WBØZLM, WBØVRA, WBØHNO, WØGC, WBØWXE, WBØWKK, WDØGEJ, WØPWH, WAØCHE, WØQB, WBØHEF, KØCWQ, WBØVQY, WBØZLP, WØFXD, WDØGEK, WØHRL, KØUQH, WBØVRD, WBØOVZ, WBØPKJ, KØZMZ, WAØRTT, WØFXY, WBØEYJ, WBØZLO.

CANTERBURY AERO CLUB AWARD—JULY, 1978

Contact any station and use the last letter of the callsign to make up the words "Canterbury Aero Club." All stations must contact at least one ZL3 station with additional ZL3 stations used as bonuses to fill any gaps. Each station may be used only once for the award. Use all bands, all modes; also available to SWLs. No QSLs required; send certified list only to CAC Award, PO Box 1733, Christchurch, New Zealand. Cost is 50¢ for ZL, $1 overseas (award airmailed). Applications must be received before November 1. Award period is the entire month of July, 1978!

Note: Overseas stations can claim the Christchurch award also at no additional cost if they contact 5 ZL3 (Christchurch) stations; VK contact 10.

JEFFERSON DAVIS MONUMENT AWARD

The Pennyroyal Amateur Radio Society will be operating portable from the Jefferson Davis Memorial Park on June 3, 1978. This certificate will be issued to any amateur presenting written confirmation of contact with a PARS member during the QSO period, or any ten KY amateurs during the year. Awards may be obtained by sending $2.00 and your QSL cards to PARS, PO Box 1077, Hopkinsville KY 42240. Your QSL cards will be returned with the award. The QSO period begins at 1400 GMT June 3 and ends 0500 GMT June 4. Frequencies to be monitored are as follows: Novice—3.740, 21.240, 28.104; General—3.970, 7.270, 14.310, 28.610.

Ham Help

I am looking for a schematic and manual for a model H21-10 Motorola handie-talkie. I will gladly pay for a photocopy.

Robert D. Houlihan N9DH
497 E. Second St.
Galesburg IL 61401

I am interested in contacting a ham who shares my interests in radio and electronics and model railroading in order to set up a 40 meter sked.

Paul Braun WD9GCO
PO Box 32
Steeleville IL 62288

I need schematics 5030089, 5030494, 5030683, and for the ac P.S. for the ITT Mobile Tel. MT-600.

Dick Haskin W6KEC
149 Mauna Loa Dr.
Monrovia CA 91016

I would like to obtain the booklet "AN/ARC-2 Conversion," written by Roy Pafenberg. I recently saw this advertised in the June, 1963, *73*. I would also appreciate any info on any other articles written concerning the conversion of this radio. Any help would be greatly appreciated.

John P. Centers
514 S. Pine St.
Wapakoneta OH 45895

I would like to get schematic/service manuals for Hewlett-Packard model 150A scope and Hewlett-Packard model 400D ac VTVM. I am willing to pay a reasonable price for these manuals.

John A. Poplawski
PO Box 1708
Killeen TX 76541

Oscar Orbits

The listed data tells you the time and place OSCAR crosses the equator in an ascending orbit for the first time each day. To calculate successive orbits, make a list of the first orbit number and the next twelve orbits for that day. List the time of the first orbit. Each successive orbit is 115 minutes later (two hours less five minutes). The chart gives the longitude of the first crossing. Add 29° for each succeeding orbit. When OSCAR is ascending on the other side of the world, it will descend over you. To find the equatorial descending longitude, subtract 166 degrees from the ascending longitude. To find the time it passes the North Pole, add 29 minutes to the time it passes the equator. You should be able to hear OSCAR when it is within 45 degrees of you. The easiest way to do this is to take a globe and draw a circle with a radius of 2480 miles (4000 kilometers) from the home QTH. If it passes right overhead, you should be able to hear it for about 24 minutes total. OSCAR will pass an imaginary line drawn from San Francisco to Norfolk about 12 minutes after passing the equator. Add about a minute for each 200 miles that you live north of this line. If OSCAR passes 15 degrees from you, add another minute; at 30 degrees, three minutes; at 45 degrees, ten minutes. Mode A: 145.85-.95 MHz uplink, 29.4-29.5 MHz downlink, beacon at 29.502 MHz. Mode B: 432.125-.175 MHz uplink, 145.975-.925 MHz downlink, beacon at 145.972 MHz.

Oscar 7 Orbital Information

Orbit	Date (June)	Time (GMT)	Longitude of Eq. Crossing °W
16203 Bbn	1	0114:48	76.3
16215 Abn	2	0014:09	61.2
16228 Bbn	3	0108:26	74.7
16240 Bbn	4	0007:46	59.6
16253 Abn	5	0102:04	73.2
16265 Bbn	6	0001:24	58.0
16278 Bbn	7	0055:41	71.6
16291 Abn	8	0149:59	85.2
16303 Bbn	9	0049:19	70.1
16316 Bbn	10	0143:37	83.6
16328 Abn	11	0042:57	68.5
16341 Bbn	12	0137:14	82.1
16353 Bbn	13	0036:35	66.9
16366 Abn	14	0130:52	80.5
16378 Bbn	15	0030:13	65.4
16391 Bbn	16	0124:30	78.9
16403 Abn	17	0023:50	63.8
16416 Bbn	18	0118:08	77.4
16428 Bbn	19	0017:28	62.2
16441 Abn	20	0111:46	75.8
16453 Bbn	21	0011:06	60.7
16446 Bbn	22	0105:23	74.3
16478 Abn	23	0004:44	59.1
16491 B	24	0059:01	72.7
16504 Bfd	25	0153:18	86.3
16516 Abn	26	0052:39	71.1
16529 Bbn	27	0146:56	84.7
16541 Bbn	28	0046:17	69.6
16554 Abn	29	0140:34	83.2
16566 Bbn	30	0039:54	68.0

New Products

from page 19

The top-of-the-line SST T-2 Ultra Tuner tunes out swr on any coaxfed or random wire antenna. It works great on all bands (80-10 meters) with any transceiver running up to 200 Watts output. Because of its small size (5¼" x 2¼" x 2½"), the Ultra Tuner is ideal for mobile and portable as well as home installations.

The T-2 Ultra Tuner is housed in an attractive bronze finished enclosure. SO-239 coax connectors are used for transmitter input and coaxfed antennas. Convenient binding posts are provided for random wire and ground connections.

The SST T-2 Ultra Tuner sells for $39.95.

The SST T-1 Random Wire Antenna Tuner is the original small tuner. It will load up a random wire on all bands (160-10 meters) with any transceiver running up to 200 Watts output. The T-1 is great for apartments and hotel rooms—simply run a wire inside, out a window, or anyplace available. The T-1 features a neon tune-up indicator, SO-239 connector, and a compact (4-1/4" x 2-3/8" x 3") bronze-finished enclosure. It sells for $29.95.

The SST T-3 Mobile Impedance Transformer matches 52 Ohm coax to the lower impedance of a mobile whip or vertical. It has a 12-position switch with taps spread between 3 and 50 Ohms. The T-3 uses an efficient toroid inductor for small size: 2¾" x 2" x 2¼". It sells for $19.95.

All SST products carry a 1 year unconditional guarantee and may be returned within 10 days for a full refund if you are not satisfied for any reason. To order, call (213)-376-5887, or mail to: *SST Electronics, PO Box 1, Lawndale, California 90260.*

MIDLAND INTRODUCES MOBILE AMATEUR ANTENNAS

Midland International Corporation's Communications Division has announced the introduction of four newly-designed mobile radio antennas for the amateur radio enthusiast. Specifically designed and factory tuned for operation with 1.5:1 or better vswr on the 2 meter (144 MHz-148 MHz) or 220 meter (220 MHz-225 MHz) amateur band, the antennas are base loaded, with precision wound and sealed loading coils.

Offered in either trunk/roof mount or magnet mount models, the 2 meter and 220 meter antennas feature a stainless steel whip and 17 feet of coaxial cable with connector and weather-resistant, plated hardware. The trunk/roof mount antennas (model 18-940, 950) clamp on the trunk lid lip or hatchback without drilling holes for mounting. The magnet mount antennas (models 18-941, 951) are prewired and feature heavy-duty, 5 oz. magnetic bases to hold the antenna securely at highway speeds. All four antennas are designed to give 3 dB gain in either the transmit or receive mode.

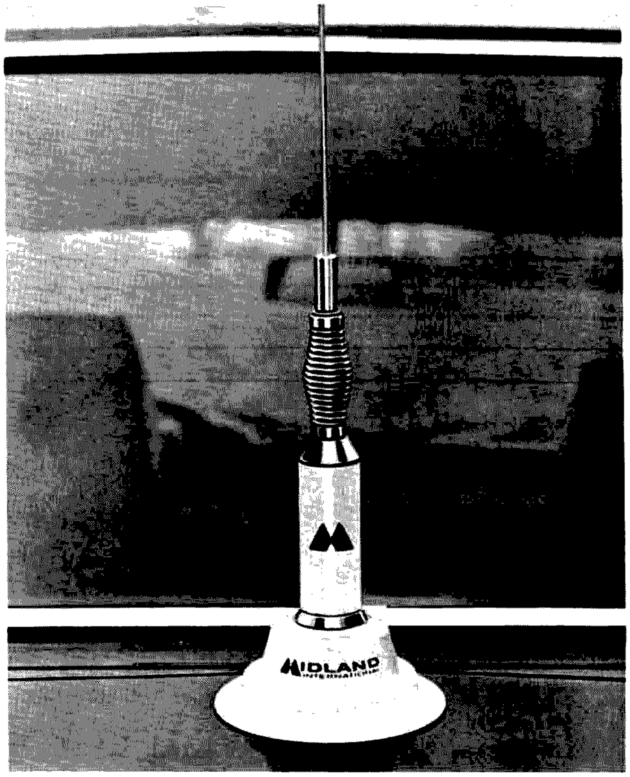

The portable Magnet mount model 18-941, 2 meter mobile antenna from Midland.

For further information on Midland's full line of 2 meter and 220 meter amateur radios and accessories, contact: *Pat O'Malley, National Marketing Manager for Amateur Radio, Communications Division, Midland International Corporation, PO Box 1903, Kansas City, Missouri 64141, (913)-384-4200.*

PALOMAR'S LOOP ANTENNA

A new receiving antenna for the 80 and 160 meter amateur bands, the broadcast, and the VLF band has been introduced by Palomar Engineers.

The loop rotates 360° in azimuth and ±90° in elevation, with calibrated scales for both. The elevation or "tilt" of the loop is a new feature of the Palomar Engineers design and gives much deeper nulls than ordinary direction-finder loops.

Loop nulls are very sharp on local and ground wave signals, but are broad or nonexistent on distant sky wave signals. This allows local interference to be eliminated while DX stations can still be heard from all directions.

The loop picks up much less noise than the usual transmitting antenna. This, along with its ability to null out specific interfering signals, improves reception considerably.

A loop amplifier serves as the mounting base for the

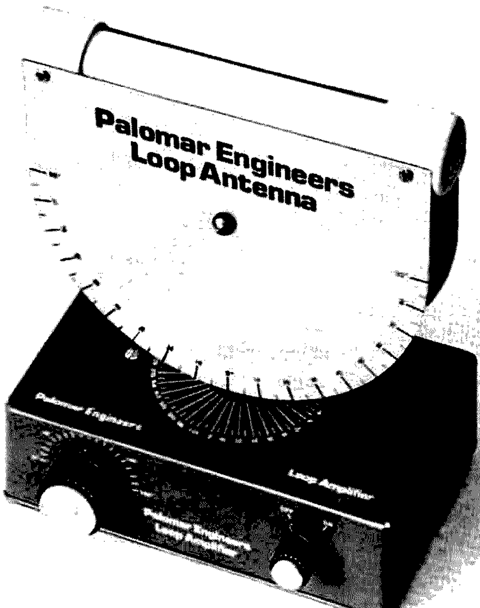

The loop antenna from Palomar.

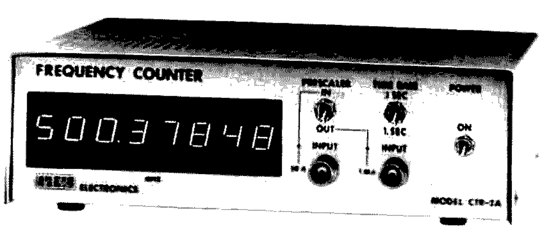

Davis 500 MHz and 1 GHz frequency counter.

antenna. It contains a tuning capacitor to resonate the loop and an amplifier to boost the signal and preserve the high "Q" of the loop. The loop antenna plugs into the amplifier.

Plug-in loops are available for 160/80 meters (1600-5000 kHz), broadcast band (550-1600 kHz), and VLF (150-550 kHz).

The loop amplifier is $67.50 and the plug-in loops are $47.50 each. Add $2 shipping/handling.

A free descriptive brochure is available from *Palomar Engineers, PO Box 455, Escondido CA 92025.*

LOW-COST, PROFESSIONAL-QUALITY DAVIS 500 MHz AND 1 GHz FREQUENCY COUNTERS INTRODUCED

A versatile series of professional-quality, low-cost 500 MHz and 1 GHz frequency counters—designed for reliability and high accuracy in communications, engineering labs, and general electronics applications—has been introduced by Davis Electronics.

Covering the entire frequency spectrum to 1000 MHz, the Davis CTR-2A series of wide-range VHF-UHF frequency counters combines a 50 MHz (100 MHz in model CTR-2A-1000) counting range with built-in prescaler and preamplifier; a period measurement option is available to further extend usefulness of the CTR-2A series. Affordable 500 or 1000 MHz versions come either factory-assembled or in kit form (for even greater savings) and all CTR-2A models measure a compact 8.8" x 8" x 2.8", weighing only 2 lbs. 10 ozs.

Superior features include 8-digit display, built-in VHF-UHF preamp and prescaler, high stability TCXO timebase, automatic input limiting, protected input, and automatic Dp placement. Selectable gate times are 0.1 and 1 sec. (10 sec. optional), with resolution to 1 Hz (or 0.1 Hz with 10 sec. option). Available low-cost options are oven crystal, 12 V dc operation, 10 sec. timebase, tilt handle, oversize digital display (.43" versus .3"), and period measurement.

Model CTR-2A-500 covers a frequency range from 10 Hz to 512 MHz, and the CTR-2A-1000's range is 10 Hz to 1000 MHz. Input impedance for both models is 1 megohm/20 pF (direct) and 50 Ohms (prescaled). CTR-2A-500 sensitivity (direct) is 10 mV @ 25 MHz, 30 mV @ 50 MHz, while the CTR-2A-1000 is 50 mV @ 100 MHz; sensitivity (prescaled) is 50 mV @ 500 MHz for model CTR-2A-500 and 50 mV @ 1000 MHz for the CTR-2A-1000. Maximum safe input is 120 Vrms to 10 MHz, 2.5 V @ 500 MHz, while accuracy is ± 1 count ± timebase accuracy. Timebase specifications include a crystal frequency of 10.000 MHz (standard TCXO or optional oven crystal) and setability of .2 ppm (TCXO) or .1 ppm (oven crystal).

The 500 MHz kit (CTR-2A-500K) with TCXO costs $249.95, while the 1000 MHz kit (CTR-2A-1000K) with TCXO is $399.95. Kits come complete with all parts, drilled and plated-through glass PC boards, cabinet, switches, and hardware, plus detailed assembly manual and calibrating instructions. Assembly time is about 8 hours; all parts are guaranteed 90 days and factory service is available, if needed, at $25.00 plus shipping.

Factory-assembled units cost $349.95 for 500 MHz (CTR-2A-500A) and $549.95 for 1000 MHz (CTR-2A-1000A). Factory units are calibrated to specifications and guaranteed for one year; the transformer is guaranteed for life. Shipping cost is $2.00 extra.

Options are (01) handle $10.00, (02) oven crystal $49.95, (03) .43" digits $10.00, (04) 12 V dc $15.00, (05) 10 sec. timebase $5.00, and (06) period measurement $15.00. For further information, contact: *Davis Electronics, 636 Sheridan Drive, Dept. 808, Tonawanda, New York 14150, (716)-874-5848.*

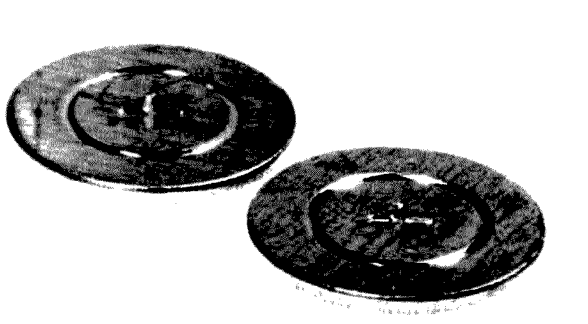

Panasonic's new long-life lithium batteries.

NEW SIZE LONG-LIFE LITHIUM BATTERY INTRODUCED BY PANASONIC

A new coin-size long-life lithium battery is now available from Panasonic Company. The new battery joins the previously announced coin lithium batteries by Panasonic for men's digital watches and calculators.

The new battery has the same profile as the other coin units (0.098" thick), but it offers a smaller diameter—0.785" versus 0.906". This reduction in size will enhance its acceptance in small digital watches and miniature calculators.

Nominal voltages of the new battery are at the 3-volt level and their capacities are in excess of 90 mAh. The cells are hermetically sealed and their shelf life is in excess of five years.

Prices of the new cells are compatible with the prices for silver oxide watch cells that the new units are expected to be replacing (one new lithium cell replaces two silver oxide units). OEM quantity prices are available on request. *Panasonic Company, One Panasonic Way, Secaucus NJ 07094.*

Ham Help

May I have your assistance, please. I am planning some redesign and modernization of my general coverage communications receiver. It appears that if high performance is to be achieved, commercial filter modules are practically necessary. Correct? Therefore, my question:

Can someone please supply the names and addresses of source candidates for obtaining one or two piece orders of such filters at less than maximum cost. Any hints for reducing the cost of these parts will be appreciated.

I had suspected that current receiver manufacturers would be a possibility; however, learning the specifications of the units and who uses what would be a miserable chore.

I have left the i-f frequency choice open until I see the prices of suitable units. My preliminary choice for pass-bandwidths are approximately 2.5 and 10 kHz.

A. Kubicz W8IGJ
Box 141
Golden CO 80401

I would like to ask for the benefit of whatever experience may be out there in the use of synthesizers and touchtone pads with walkie-talkies.

I would like to know, particularly, which brands of pads have particularly good, or particularly bad, ruggedness and reliability. My walkie-talkie is a Motorola HT-220 with Omni back. It's fully gasketed and essentially watertight. Are there any pads which can be mounted on it in such a way that HT and pad are both sealed tight?

I hear there's a synthesizer designed specifically to go into this unit, but I haven't been able to track it down. Who makes it, and how good is it? Has anyone successfully mounted a GLB synthesizer board inside without sacrificing the watertightness of the case or adding bulges, and what problems were encountered?

A related item: Has anyone come up with an antenna connector for the HT-220, other than the oversize kluge box Motorola makes strictly for tune-up purposes? I have a tentative solution, but a machine shop is required to build the screw-in adapter for the antenna hole.

John A. Carroll WB1AVV
25 Evergreen Ave.
Bedford MA 01730

Corrections

73 readers interested in obtaining the USCG *Loran-C User Handbook* should write to Loran-C Information Project, USCG (GWAN/73), Washington DC 20590 (phone (202)-426-0990). This will result in a quicker response than the address given in *73* for April, 1978, in the "Loran-C Receiver, part I" article. Also, the U.S. Naval Observatory now has a recorded daily message on time difference and phase value, obtained by dialing (202)-254-4662.

Ralph W. Burhans
Athens OH

Social Events

from page 175

Jacksonville hamfest which will be held on August 5 and 6, at the Jacksonville Beach Municipal Auditorium. Activities will include the usual swap tables and exhibitors' displays. Featured programs include a DX presentation by the North Florida DX Assn. on that group's recent DXpedition to Haiti at the invitation of the Haitian government. Shortly after the trip, amateur radio was legalized in Haiti after being outlawed for many years. NFDXA also has two *CQ Magazine* world championships to their credit. A complete seminar on microprocessors will also be featured, along with a "pileup" contest, hidden transmitter hunt, QLF contest, and ARRL meeting. Advanced tickets are now available for $2.50 per person ($3 at the door), with swap tables available for $5 per day. The hamfest site is only one block from the Atlantic Ocean, and those attending can bring their families for a weekend of fun on the beach. Door prizes and hourly drawings will be conducted. All inquiries should be directed to N4UF, Hamfest Chairman, 911 Rio St. Johns Dr., Jacksonville FL 32211. Phone is 744-9501.

UPPER ST. CLAIR TOWNSHIP PA
AUG 6

The 41st annual hamfest of the South Hills Brass Pounders and Modulators will be held on August 6, 1978, from noon to dusk, at St. Clair Beach on Route 19 south, Upper St. Clair Township. There will be a swap and shop, picnic area, and swimming for the family. Mobile check-in on 29.0 MHz and 146.52 simplex. Information and preregistration for $1.50 ($2.00 at the door) are available from Bruce Banister, 5954 Leprechaun Dr., Bethel Park PA 15102. Vendors must register.

AMARILLO TX
AUG 11-13

The 1978 edition of the Golden Spread Amateur Radio Convention will be held at the Holiday Inn West Motor Hotel, 601 Amarillo Blvd. West, Amarillo, Texas, on Friday evening, Saturday, and Sunday, August 11, 12, and 13, 1978. It is sponsored by the Panhandle Amateur Radio Club of Amarillo. An area has been set aside for amateurs to display their trading and swapping gear. Two Hospitality Hours are slated: one for early arrivals the evening of Aug. 11 and the second for Saturday evening, Aug. 12. Six technical sessions will be held, featuring the very latest in communications expertise. Special activities for the ladies will be available so that there will be something for everyone. Preregistration will be $4.00 per person; registration at the door will be $6.00.

LEXINGTON KY
AUG 13

The Bluegrass Amateur Radio Club (Lexington, Kentucky) will hold its annual Central Kentucky Hamfest on August 13, 1978, at the Lexington National Guard Armory located adjacent to the Bluegrass Field on Airport Road, Lexington, Kentucky. The hamfest program will include grand prizes, hourly door prizes, manufacturers' exhibits, an indoor/outdoor flea market, guest speakers, and forums.

CEDARTOWN GA
AUG 13

The Cedar Valley Amateur Radio Club of Cedartown, Georgia, will sponsor the Cedar Valley Hamfest, which will be held on August 13, 1978, from 9 am to 4 pm, at the Polk County Fairgrounds located one mile east of Cedartown on US 278. Talk-In frequency will be (WR4AZU) 147.72/.12. Food, drinks and lots of prizes! For more information, please contact Jim T. Schllestett, Pres., W4IMQ, Cedar Valley ARC, PO Box 93, Cedartown GA 30125; telephone: (404)-748-5968.

WILLOW SPRINGS IL
AUG 13

The Hamfesters 44th annual picnic and hamfest will be held on Sunday, August 13, 1978, at Santa Fe Park, 91st and Wolf Road, Willow Springs, Illinois, a southwest suburb of Chicago. There will be exhibits for OMs and XYLs and the famous swappers' row. Tickets at the gate will be $2.00; in advance, $1.50. For hamfest information or advance tickets, send check or money order (SASE appreciated) to Bob Hayes, 18931 Cedar Ave., Country Club Hills, Illinois 60477.

ROCHESTER PA
AUG 19

The Beaver Valley Amateur Radio Association's first annual hamfest will be held on Saturday, August 19, from 9 am to 5 pm at Brady's Run Park located 5 miles north of Rochester PA on Route 51. Advance tickets are $3.00 or three for $8.00; at the gate, they'll be $4.00 or three for $10.00. Seller's fee is $1.00—bring your own table. There will be a flea market for new and used equipment. Camping spaces, swimming, boating and fishing are available at the park. Refreshments will be available. Prizes: (1st) Kenwood TS-520S, (2nd) Midland 13-500 2 meter FM transceiver, (3rd) DenTron Super Tuner. Talk-in on 25/85; check-in on 52/52. For more Information, write Wayne R. Sphar WA3ZMS, Secretary BVARA, 1200 Atlantic Ave., Monaca PA 15061.

HAMDEN CT
AUG 20

The WELI Amateur Radio Club's second annual flea market and auction will be held on Sunday, August 20 (rain date August 27) from 10:00 am to 4:00 pm at Radio Towers Park, Benham St., Hamden, Connecticut. General admission will be $.50, and vendor spaces are $5.00 each. For further information, contact Mike WA1PXM at 934-1063 or Dave WA1ZWB at 467-3258 (area code 203).

HUNTSVILLE AL
AUG 20

The North Alabama hamfest will be held on Sunday, August 20, 1978, at The Mall in Huntsville AL. There will be prizes, a large flea market, an ARRL forum, MARS meetings, and ladies activities. A hamfest supper will be held on Saturday night. For more information, write to N.A.H.A., PO Box 423, Huntsville AL 35804.

WENTZVILLE MO
AUG 27

The Saint Charles Amateur Radio Club, Inc., will hold the SCARC Hamfest '78 on August 27 at the Wentzville Community Club. There will be prizes, food, and fun—flea market, CW contest, free bingo, food, beer, and more. Admission will be $1 per car. Talk-in on 34/94 and 07/67. For motel and camping information, prize lists, dealer reservations, and airport pickup, write to SCARC, PO Box 1429, St. Charles MO 63301.

MONTICELLO IN
AUG 27

The Tioga Amateur Radio Society, Monticello, Indiana, will sponsor a ham radio cruise day on Lake Freeman on Sunday, August 27, 1978. It will take place aboard the Madam Carroll boat—the largest inland boat in Indiana with a length of 135 feet and a beam of 36 feet. Fun for the entire family. There will be 4 rigs aboard. You can work amateur radio from a marine mobile—special certificates and QSL cards for this operation. Decks open at 1:00 pm for 2 cruises at 2:00 pm and 4:00 pm. Advance tickets are $2.00; at the dock, $2.50. Send an SASE to Byron Robbins WD9EXI Sec'y, 571 South Bluff St., Monticello, Indiana 47960, for advance tickets or further details.

BUTLER PA
SEP 10

The Butler County Hamfest, sponsored by the Butler County ARA, will be held on Sunday, September 10, from 11 am to 4 pm at the Butler County Farm Show Grounds, adjacent to Butler Roe Airport (with a paved runway for fly-ins). Check-Ins on 147.90/.30 and .52 simplex. Contact John K3HJH or Cliff WB3CDA for more details.

FINDLAY OH
SEPT 10

The second largest hamfest in Ohio, the 36th annual Findlay hamfest, will be held on September 10, 1978, rain or shine, at Riverside Park from 5 am to 5 pm. Watch for directional signs. There will be free parking, free reserved indoor space (bring your own tables), a massive swap and shop, and lots of prizes. A 2 meter hunt will be held at 1 pm and the main prize drawing at 3 pm. Tickets are $1.50 in advance, $2 at the door. Talk-In and prize check-in on 146.52. For tickets, space reservation, and further information, send an SASE to Clark Foltz W8UN, 122 West Hobart Ave., Findlay, Ohio 45840.

TYSONS CORNER VA
SEPT 16-17

DXPO '78 will be held on September 16-17, 1978, at the Ramada Inn at Tysons Corner, Northern Virginia (intersection of routes 7, 123, and 495). It's one of the world's greatest DX events . . . if you attended DXPO '74 and DXPO '76, you know what we are talking about. You will receive an advance program, but mark your calendar now! If you have not attended one of our DXPOs, get your name on the mailing list for the advance program and details. Write to Richard Vincent K3AO, Route 1 Box 230, Bryantown, MD 20617.

SYRACUSE NY
OCT 7

October 7, 1978, from 9:00 am until 6:00 pm, will be the date and time for this year's annual Radio Amateurs of Greater Syracuse hamfest. The event will be held at the New York State Fairgrounds, located adjacent to Interstate route 690, 3 miles southeast of New York State Thruway, Exit 39, one mile northwest of Syracuse.

propagation

by
J. H. Nelson

EASTERN UNITED STATES TO:

GMT:	00	02	04	06	08	10	12	14	16	18	20	22
ALASKA	14	14	7A	7	7	7	7	7	7A	14	14	14
ARGENTINA	14	14	14	7A	7	7	14	14	14	14A	14A	14
AUSTRALIA	14	14	7A	7B	7	7	7	7	7	7B	14	14
CANAL ZONE	14	14	14	7	7	7	7A	14	14	14	14	14
ENGLAND	14	7	7	7	7	7	14	14	14A	14	14	14
HAWAII	14	14	7A	7B	7	7	7	7	7A	14	14	14
INDIA	7A	7B	7B	7B	7B	7B	14	14	14	14	14	14
JAPAN	14	14	7	7	7	7	7	7	7	7A	14	14
MEXICO	14	14	7A	7	7	7	7	14	14	14	14	14
PHILIPPINES	14	7A	7B	7B	7B	7B	7B	7	7	7A	14	14
PUERTO RICO	14	7	7	7	7	7	7	7A	14	14	14	14
SOUTH AFRICA	7	7	3A	7	7B	14	14	14	14	14	7B	7B
U. S. S. R.	7	7	7	7	7	7	7A	14	14	14	14	7A
WEST COAST	14	14	7A	7	7	7	7	7A	14	14	14	14

CENTRAL UNITED STATES TO:

GMT:	00	02	04	06	08	10	12	14	16	18	20	22
ALASKA	14	14	14	7	7	7	7	7	7A	14	14	14
ARGENTINA	14	14	14	7A	7	7	7A	14	14	14	14A	14
AUSTRALIA	14	14	14	7A	7	7	7	7	7	7B	14	14
CANAL ZONE	14	14	14	7	7	7	7A	14	14	14	14	14
ENGLAND	7A	7	7	7	7	7	7	7A	7A	14	14	14
HAWAII	14	14	14	7A	7	7	7	7	7A	14	14	14
INDIA	14	7A	7B	7B	7B	7B	7B	7A	14	14	14	14
JAPAN	14	14	14	7	7	7	7	7	7	7	7A	14
MEXICO	14	14	7	7	7	7	7	7	7	7A	14	14
PHILIPPINES	14	14	14	7B	7B	7B	7B	7	7	7	7A	14
PUERTO RICO	14	14	14	7	7	7	7	14	14	14	14	14
SOUTH AFRICA	7	7	3A	7	7B	7B	7B	14	14	14	7	7
U. S. S. R.	7	7	7	7	7	7	7	7A	14	14	14	7A

WESTERN UNITED STATES TO:

GMT:	00	02	04	06	08	10	12	14	16	18	20	22
ALASKA	14	14	14	7A	7	7	7	7	7	7	7A	14
ARGENTINA	14	14	14	7A	7	7	7	7A	14	14	14	14A
AUSTRALIA	21	14A	14A	14	7A	7	7	7	7	7B	14	14
CANAL ZONE	14	14	14	7	7	7	7	14	14	14	14	14
ENGLAND	7A	7	7	7	7	7	7	7	7A	14	14	14
HAWAII	14	14A	14A	14	14	7A	7	7	7A	14	14	14
INDIA	14	14	14	7B	7B	7B	7B	7	7A	14	14	14
JAPAN	14	14	14	14	14	7	7	7	7A	14	14	14
MEXICO	14	14	7	7	7	7	7	7	7A	14	14	14
PHILIPPINES	14	14	14	14	14	7B	7B	7	7	14	14	14
PUERTO RICO	14	14	14	7	7	7	7	14	14	14	14	14
SOUTH AFRICA	7	7	3A	7	7B	7B	7B	7A	14	14	7A	7
U. S. S. R.	7	7	7	7	7	7	7	7	14	14	7A	7A
EAST COAST	14	14	7A	7	7	7	7	7A	14	14	14	14

A = Next higher frequency may also be useful
B = Difficult circuit this period
F = Fair
G = Good
P = Poor
SF = Solar Flares

june

sun	mon	tue	wed	thu	fri	sat
				1 G	2 G	3 P
4 G	5 G	6 G	7 F	8 F/SF	9 G/SF	10 G/SF
11 F/SF	12 F/SF	13 F/SF	14 F/SF	15 F/SF	16 F/SF	17 F/SF
18 P/SF	19 G	20 G	21 G	22 G	23 P	24 G
25 G	26 G	27 G	28 G	29 P	30 G	

July 1978 $2.00

73 Magazine for Radio Amateurs

73 STAFF

EDITOR/PUBLISHER
Wayne Green W2NSD/1

EXECUTIVE VICE PRESIDENT
Sherry Smythe

ASSISTANT PUBLISHER
Jeffrey D. Detray WB8BTH/1

ADMINISTRATIVE ASSISTANT
Dotty Gibson

ASSISTANT BUSINESS MANAGER
Robert R. LaPointe

MANAGING EDITOR
John C. Burnett

ASSISTANT MANAGING EDITOR
Susan G. Philbrick

NEWS EDITOR
Gene Smarte WB6TOV/1

I/O EDITOR
John Craig

BOOK PUBLICATIONS
Christopher E. Smith

PRODUCTION MANAGER
Lynn Panciera-Fraser

ART DEPARTMENT
Craig Brown
Gayle Cabana
Bob Drew
Bruce Hedin
Carl Jackson
James Lamothe
Dion Owens
Noel R. Self WB1ARP
Robin M. Sloan

PRINTING
Gary Steinbach
Andy Comeau
Dan Morgan

PHOTOGRAPHY
Bill Heydolph
Tedd Cluff

TYPESETTING
Barbara J. Latti
Jennifer Johansson
Mary Kinzel
Marie Walz

BOOKKEEPER
Knud E. M. Keller KV4GG/1

CIRCULATION
Barbara Block

DATA ENTRY
Judy Waterman
Judy Brumaghim
Linda Cate
Mary Kinzel

DIRECTOR OF MARKETING
Daniel D. Savage

SHIPPING
Theresa Toussaint
Sue Chandler
Ethan Perry
Bill Barry

PLANT MAINTENANCE
Michael Coutu
Lorraine Pickering

RECEPTIONIST
Doni Jarvis

ASSOCIATES
Robert Baker WB2GFE
E. H. Barnett WB6IIX
Schley Cox WB9LHO
Tom DiBiase WB8KZD
Terry Fox WB4JFI
W. Sanger Green
Dave Ingram K4TWJ
Larry Kahaner WB2NEL
Joe Kasser G3ZCZ
Bill Pasternak WA6ITF
John Schultz W4FA
Walter Scott K8DIZ
Peter Stark K2OAW
Bill Turner WA6ABI

COMPUTER PROGRAMMING
Richard J. Dykema
Ron Cooke
Steven B. Lionel

ADVERTISING
[illegible]

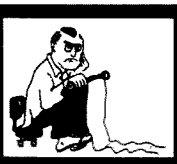

. . . de W2NSD/1

EDITORIAL BY WAYNE GREEN

ANARCHY VS. GOVERNMENT REGULATION

The ten meter linear amplifier ban is the first concrete example of radio amateurs being punished by the FCC for the transgressions of CBers. This means that, in the future, an amateur wanting to run a reasonable amount of power on ten meters will be in trouble one way or another.

Sure, we'll be permitted to build a maximum of one amplifier per year of our own, but no kits are permitted. I don't know about you, but I hate to think of the TVI a lot of poorly built and filtered amplifiers can create. Or, we can buy a rig with a kilowatt amplifier built in, and that isn't going to be cheap because the regs, with regard to preventing 27 MHz retuning, will run the costs up, as will the time-consuming and expensive FCC acceptance hurdles.

In terms of FCC regulations, I lean towards anarchy . . . that is, the fewer rules, the better. This is being called populism, of late. No matter what you call it, I've seen it work over and over with amateur radio, and I am disappointed (but not surprised) at the number of hams who have been unable to learn from history and who, thus, insist on trying to cure ham problems by increasing the number of rules.

It's funny about the FCC. Under Chairman Wiley, they set about a course of deregulation. I think that they were sincere in believing that this was their goal. Yet, in just about every case, their proposed rule changes turned out to be more regulation, instead of less. We've fought back and we've gradually been winning the war, but the winning has been so slow that few amateurs seem aware of the changes we've brought about.

How do you fight the government? It's difficult, obviously. They are the ones printing our money, and they will use any amount of our money to get their way, no matter how indefensible their way is. If their way turns out to be particularly bad, they set themselves up as the scorekeepers and issue periodic releases to the press and TV as to how great things are going.

A fine example of this is the National Highway Traffic Safety Administration (NHTSA) and their 55 mph speed limit. The May issue of *Car and Driver* exposes the NHTSA statistics on traffic safety to show, rather conclusively, that, using the government's own figures, there has been an increase in traffic deaths at 55 mph vs. those at 70 mph, after some other obvious factors have been taken into consideration.

Oh, yes, the gas saving . . . heh. It turns out, using the government's figures again, that the saving has amounted to about 1%, which is less than we could expect if we increased the pressure in our tires by two psi.

So, if the 55 mph speed limit costs more lives than a 70 mph limit, and it saves no gas, what is it there for? To make money. To make a lot of money . . . and, in that, it is a success.

Speed kills, right? Would you say it is the number one killer in vehicular accidents? Well, maybe number two? The statistics on fatal accidents are carefully checked and, in California, in 1976 (California is a good place to check, because everyone *has* to drive there . . . there isn't any other way to get around), driving over the speed limit was cited in 2.3% of the fatalities. That was 11th in the cause of fatalities. It is almost insignificant compared to drunken drivers (who were not speeding).

PREACHING REVOLUTION

There was a time in this country when citizens were able to get outraged over gross violations of their privilege of doing what they wanted as long as it didn't hurt others. There was a time when the people of the United States of America were so proud of their country that they took personal pride in its being first-rate, and they did something about it when lousy laws were pushed through. Today, I keep hearing on all sides that we must obey all laws, no matter how unjust or unreasonable . . . and we must not rock the boat. Remember that it is a waste of time to fight city hall, so knuckle under and play Uncle Tom.

It is seldom productive to openly refuse to obey the law. This gets you in jail, with a bunch of people jeering at you, and little else. But there are ways you can fight back, even today . . . heck, especially today. In these days of The Media, you want to take advantage of every edge you can get to turn things around.

FIGHTING THE FCC

First, do you intend to take the restrictions on amplifiers lying down? Aren't you the least bit irked at the injustice of it all? Are you really so dead inside that you don't give a damn?

If that reached you, then you are wondering what you might be able to do and probably hoping that it won't be much trouble and won't force you to put your name on anything . . . after all, no sense taking chances . . . right? I've seen people afraid to put their name on a petition to nominate a man for a political office. *Afraid!* Look here! If you care much about anything, you put your name out there where the politicians can see it. This is one thing you have which counts—you are a vote, and politicians spend more time getting votes than everything else they do combined. Their whole life revolves around the next election, even though you may not start to worry about that for two, four, or six years.

Okay, your name and support of a cause will help. It will help a lot. But you can do more than say "here, here" when someone with more guts than you gets up in the ham club and says, "Let's fight this travesty the FCC dumped on us." One man can do a lot. Two can do much, much more, if they cooperate so as not to duplicate the work.

Getting down to the nitty-gritty, what can you and your club do about the situation? Your first step is to read the rules and the recent changes. See any copy of a *73* license study guide for the rules, and read the complete unexpurgated FCC regulation changes in *73*. Decide what changes you think should be made . . . hopefully toward deregulation. Then start your campaign. You want to write to your congressmen and

73 Magazine is published monthly by 73, Inc., Peterborough NH 03458. Subscription rates in the U.S. and Canada are $15 for one year, $26 for two years, and $36 for three years. Outside the U.S. and Canada, write for rates. Second class postage paid at Peterborough NH 03458 and at additional mailing offices. Publication No. 700420. Phone: 603-924-3873.

INCLUDE OLD ADDRESS AND ZIP CODE WITH ADDRESS CHANGE NOTIFICATION. Microfilm edition—University Microfilm, Ann Arbor MI 48106.

your senators, to the FCC commissioners individually, with copies to your congressmen. You want to get releases out to the papers, to TV stations, and to talk-show hosts. Get club members to personally visit congressmen either in Washington (if they happen to be there), or when the congressmen come home for a visit.

If you have any idea that petitions don't work, just try one on a politician and be amazed. Your congressional representative knows well that those signatures are votes . . . the things he has devoted his life to getting, at almost any cost. If getting the vote of you and your friends means bisecting the FCC, then the FCC will get bisected.

WE CAN SELF-GOVERN

Yes, I know all about the crazies. We've always had 'em. But one of the reasons I never miss a "Silent Keys" column is to watch for my favorite bad guys to make that final honor. But despite these mentally handicapped irritations, the mainstream of amateur radio manages to progress . . . particularly when the FCC acts so slowly that it does not have an opportunity to screw things up . . . which, fortunately, is a lot of the time.

In recent years, we had the transition from AM phone to sideband. This was accomplished by way of a "gentlemen's agreement" that sideband would use the top part of the 20m band and AM the lower part. Sideband gradually crept down until there was no AM left. Not without skirmishes with Those Who Fight Progress. FM repeaters also developed reasonably, when left alone.

In the early days of repeaters, we had wars between groups, but, after a while, reason prevailed and the repeater groups got together, forming coordinating committees and repeater councils. By the time the FCC came along with repeater rules, they were totally unneeded. Repeaters were about 90% coordinated throughout the country. Most of the wars had been cooled and things were relatively peaceful. One of the last things we needed were those repeater regulations.

Is it possible that amateurs could get together and develop their own rules? I think it would work. I think the FCC could get out of the ham business completely and amateurs would be able to govern themselves, with or without the ARRL. We could agree on allocations for the different modes, on band plans, and even on setting up our own licensing exams. We could also do a lot more to free ourselves from problems brought on by the crazies.

If we were self-governing, we could call out-of-line amateurs to task and put peer pressure to work. Repeaters would not spring up without coordination, if all of the repeater users would work together to discourage this. Uncoordinated repeaters could be forced to get off the air if amateurs would refuse to use them. We could take the time to get on and announce our desire that a repeater be coordinated before being opened for general use.

It comes down to this: democracy or dictatorship. And excessive government regulation certainly does not qualify as democracy. The rules we've been getting from the FCC could even be challenged in court—if we had an organization with the money and the guts to do it. Lacking any such, it is up to us as individuals to fight the only way we can . . . with letters to congress, letters to the Commissioners, with group actions through our clubs, and with releases to the papers and media. Yes, I'm preaching revolution against the FCC, using the tools which we know work and which are within the laws of our country.

WASTING TIME

Somewhere on my desk is a letter from a reader who says he has been trying to learn Morse code since 1914. Now he has bought my code tapes and hopes this will make the difference. It won't.

The only way I've found to get things done is go ahead and do them, whether I like it or not. Buying a code tape and putting it in a drawer is not going to do much, obviously. Even going to the extent of putting it under your pillow for mental assimilation will not increase code speed. Sure, my tapes make it easier to learn the code than any other way, but only if you take the time to use them.

Fifteen or twenty minutes a day is not much to spend on something as valuable and fun as a ham ticket. When you get up from some stupid television show you've been watching, ponder, if you will, on how much value this is going to have for you ten years hence. Hell, you won't remember the dumb thing very clearly next week, unless you go back under hypnotic regression. By next year, you'll be able to watch the rerun and wonder if you saw that particular episode during the first run.

As a registered procrastinator, I feel free to pass along gratuitous advice on getting things done. If I hadn't done exactly the same thing with the code, I would have had my ham ticket a couple of years earlier than I did. Two years of precious ham time was wasted because I wouldn't spend a few hours practicing the code.

Let's be honest for a moment. How many things that you consider important have you done in your life which didn't take a lot of time and trouble? I can't think of anything I'm proud of which didn't take a good deal of effort and determination. Now, how about getting going on your code?

MAKING MONEY

Every now and then, a ham says that he really can't afford to buy a subscription to *73* because he doesn't have the money. With all of the opportunities there are to make money, this is almost beyond understanding. Hell's bells! All it takes is the gumption to actually do some of the things which are obvious to us all.

Some years ago, I suggested that hams were ideally suited to getting into the security business. Several dozen readers took me up on that and I've had letters from many of them saying that they tried it and have done splendidly. It's certainly easy to get started, with several firms catering to your security supply needs with mail-order catalogs (such as Mountain West Alarm Supply, Box 10780, Phoenix AZ 85064; Emel Electronics, Box 146, Sheffield MA 01257; Ellin Alarm, 161 Bonad Road, Chestnut Hill MA 02167).

Businesses which can be run in spare time are great and they can be expanded to take over full time if they are more profitable than the old button factory.

Another great spare-time possibility is distributing magazines and books. There are thousands of smaller magazines which are looking desperately for help with this. Our experiments with local newsstand distribution of *73* and *Kilobaud* indicate that if the magazines are on display, they will sell. Unfortunately, most of the magazine wholesalers don't want to be bothered with small circulation magazines, so they won't deal with publishers. This is an opening for spare-time money-making. Just in the town of Peterborough (4500), an area representative can make about $25 per month, with one afternoon's work.

Our area rep program has shown that reps in many areas are able to make $300 or more a month with one or two days' work. That will buy a lot of magazine subscriptions, and could even build up your ham shack pretty fast. Contact our Marketing Manager, Dan Savage, and find out if your area is available for representation. You'd represent *73* and *Kilobaud* for sales on newsstands, radio and computer store counters, bookstores, hamfests, computerfests, etc. Some reps have made over $1000 in one weekend at hamfests!

With amateur radio equipment sales growing by leaps and bounds, you might be able to work part-time in a local radio store, managing their ham department. Almost every ham store has a desperate need for part-time help in servicing, too, if you're handy at that.

There are so many moneymaking opportunities in microcomputing that it is difficult to even suggest where to start. One thing is for sure: You should get your feet wet with one of the lower cost systems such as the KIM. These are expandable, and you'll end up understanding the things which will be of value to you in the long run . . . both in hardware and software. Teenagers are having a ball with this stuff, so it doesn't take a scientist to catch on.

In computing, people are making money by manufacturing, by opening computer stores, by servicing, and there is a big future in writing programs for the more popular systems. Programmers may eventually be the highest paid people in the business. One single program could easily bring in over $1 million in royalties as this field gets going.

If you put off doing things like this, life can slip away from you before you realize it. If you've got plenty of money and are living the life you like, then you're all set. But, if you have to worry about how much that new rig from Icom is going to cost, or whether you can afford to buy a new tower, or go on a DXpedition to Bonaire, then get the juices running and get into action.

You don't have to run with my ideas . . . you can think up your own. Once you start thinking in these terms, the opportunities are all around you.

MARCH WINNER

Solar power is in the forefront of the news these days, a fact somewhat reflected by the overwhelming vote for "The Solar-Powered Ham Station" as the best article in our March issue. Thanks for author Brian Kassel W5VBO's $100 check from *73* should go to the many people who cast reader service card ballots in favor of his article.

Speaking of the sun, we hope that Brian will consider spending a little of his loot for *The Propagation Wizard's Handbook*, written by our own John Nelson (73 Inc., $6.95).

RADAR AND RAPE

Along with my order for back issues, I would like to commend you on a fine magazine.

Besides the large number of practical articles by genuine electronics enthusiasts, the latest series of articles on the 10 GHz band has prompted this letter.

As I received the May issue today, I was pleasantly surprised to find the long awaited article (by John Franke) on countermeasures to police radar. As you may know, police use of radar in Ohio has been carried to the extreme. This has made the investment in anti-radar equipment a very practical move.

Please continue your policy of numerous and varied articles on new ideas in all phases of electronics.

Michael Niklas
Columbus OH

I just finished reading "Can Hams Counter Police Radar?" by John M. Franke WA4WDL.

I am anxiously awaiting your next articles on "How to Conduct a Successful Murder and Not Get Caught," "Rape in One Easy Lesson and Not Have a Worry," and "How To Hold Up a Bank and Never Get Caught." Of course, they will all have your approval.

Frankly, the article by Franke *stinks* and your approval brings *73 Magazine* to a new low.

You can argue till hell freezes over about the so-called possible damages of microwaves. But until the laws are changed, it's still the law, and contrived disregard for the law by writers like Franke and your approval add one more straw to breaking the American idea of law and order.

There would be no need for police radar if the driving public obeyed the 55 mph limit. That includes the trucker, the hot rodder, me and you, and all the rest who have a lead foot.

73 can certainly do much better than Franke's article.

Col. W. T. McAninch W4IIA
Falls Church VA

I find it hard to believe that *73 Magazine* would publish an article like "Can Hams Counter Police Radar?" To me, a ham radio magazine is about ham radio! In Mr. Franke's article, he has four methods of deception. Each of his four "methods" is a jamming system. So when did ham operators become interested in jamming? I personally would not like to be known as one of those ham jamming stations!

Most hams, I believe, try to do things the legal way. That's why we hams are hams, not DX CBers!

There is no reason for a ham to ever need a radar jamming device if he does not break any speed laws, which is what it boils down to. If a ham needs to jam radar, he is probably breaking the law. And hams do not need an image of lawbreaking.

If a person needs to jam or get "Smokey reports," let him get on 11 meters. Do not use the image of ham radio to pretty up these actions.

So leave the radar detectors and jamming systems out of ham radio. They have *nothing* to do with radio as an art!

Victor Curtis WA3YUV
Oxon Hill MD

The article in the May issue of *73*, "Can Hams Counter Police Radar?", proves that anarchy is alive and well in the United States. Never have I seen a more needless article published in the pages of your fine magazine. The author, John M. Franke, in his statement that there is a growing interest among the ham community in jamming police radar, makes a general assumption which I have yet to encounter. At last count, the proper way to change an alleged unfair, dangerous, or unpopular law was by the democratic process of the vote, not by the open advocation of disobedience. It comes as a considerable surprise to me that the editor of *73* would show such a lack of regard for the principles that make a democracy great. As to the author's question of the legal ramifications, it does not take a lawyer to observe that he is in violation of not only part 97, subpart E (Prohibited Practices and Administrative Sanctions) with regard to unidentified communications and interference, but he is also probably in violation of the various laws regarding the willful interfence of a policeman in the performance of his duty. And the author is most certainly in violation of using a car marked "for official use only," as pictured in the article, for an obviously personal matter. I would hope that in the future *73* would concentrate more on the quality of the articles presented and less on the quantity.

Thomas E. Verkler
Peoria IL

Police radar jammer?

Telephone "blue box," with national news coverage?

Calling IRS "bastards" in print?

Non-amateur computer and airplane columns?

And you expect me to renew?

This magazine has done more to harm amateur radio than any other source.

Steve Noll WA6EJO
Ventura CA

I am writing this letter in reference to your article on police radar jamming, May, 1978, issue, pages 80-82.

I wish to preface my letter by telling you that I am a Kentucky State Police Trooper and a licensed Technician class amateur.

I am somewhat amazed that your fine magazine would publish an article that I conclude is not an exercise in electronics, but an open statement that our national 55 miles per hour speed limit should be ignored. I do not wish to quote morbid statistics that show a decrease in highway deaths after the imposition of the 55 mph law, nor that the deaths have steadily risen since the CB boom, after the truck strike of 1973. But these are fact, though there may be other factors to consider. Ideally, we would need no laws, radar, or police for that matter, but we have shown we must be controlled to some extent.

I speak for myself and not the Kentucky State Police. In Kentucky, we enforce the speed law because it is the law and because we care about the people who travel our highways. We enforce the law with a degree of flexibility to allow for speedometer error, although this is not a written rule.

I would suggest that if we as drivers do not want the 55 mph speed limit, we change it. The money spent on radar detectors, CB radios, etc., could be spent to organize and influence Congress to repeal this law.

I would suggest, even though I have not researched this matter, that intentional interference with a licensed frequency may be illegal. All our radars are FCC licensed to operate on an assigned frequency and are checked to make sure they are maintained on frequency.

In closing, let me state that I enjoy your magazine, but feel that this type of article does not need to be part of it.

M. G. Stevens WA4SUV
Olive Hill KY

In the May, 1978, issue of your magazine, you published an article by John Franke WA4WDL of Norfolk, Virginia. This article encouraged the act of, and explained a procedure for, jamming radar devices used by law enforcement officials to detect speed limit violations.

Mr. Franke indicates in this article that his idea does not violate FCC rules, since the transmitter operates within assigned amateur frequencies. He therefore concludes that an amateur's license is not in jeopardy for using such a device.

Mr. Franke obivously has not read the regulation governing amateur radio operation. Such a device *is* in direct violation of at least two of the paragraphs found in Subpart E of the U. S. Rules and Regulations.

Paragraph 97.116: "The transmission of radio communication or messages by an amateur radio station for any purpose, or in connection with any activity, which is contrary to Federal, State, or local law is prohibited."

Paragraph 97.125: "No licensed radio operator shall willfully or maliciously interfere with or cause interference to any radio communication or signal."

Your magazine states: "*73* takes no stand in the developing warfare between police radar and hams interested in countermeasures. The more we read about it, the more convinced we are that police radar should be outlawed..." The last sentence, coupled with the publishing of an article which actively promotes illegal countermeasures, is an *obvious* stand.

A responsible publisher verifies the facts before printing. Is *73* so uninformed on amateur rules and regulations that it accepts without question the alleged legality of such a device?

Your ignorance of amateur regulations is inexcusable. The shadow you have cast over the amateur fraternity is despicable. With WARC close at hand, the last thing amateur radio needs is for a magazine such as yours to display regulatory ignorance and to encourage willful violation of the law.

This censure was requested by and unanimously approved by the membership at the May meeting of the Triangle Ama-

Continued on page 41

Editor:
Robert Baker WB2GFE
15 Windsor Dr.
Atco NJ 08004

CONTESTS

ARRL STRAIGHT KEY NIGHT

Complete rules in the June issue of *QST!* If no changes over last year's rules, contest runs full 24-hour period, 0000 GMT to 2400 GMT July 4. Use a straight key only! Suggested frequencies are 60 to 80 kHz up from bottom edges of 80-40-20 meter bands or 10 kHz up from bottom of Novice bands. Send "SKN" instead of RST during QSOs to identify stations working the contest. After the contest period, send a list of the stations worked plus your vote for the best "fist" heard (not necessarily worked) or most interesting QSO. All entries should be addressed to: ARRL, 225 Main Street, Newington CT 06111.

10-10 NET SUMMER QSO PARTY

Starts: 0000 GMT July 15
Ends: 2400 GMT July 16

Open to all amateurs, but only members are eligible for awards. All contacts to be made on 10 meters, any mode. A station may be counted only once.

EXCHANGE:

Name, QTH, 10-10 number. Be sure to log date and time of each contact!

SCORING:

1 point for each contact; add 1 point if with a 10-10 member. Maximum of 2 points per contact; no multipliers. Give name of your chapter.

AWARDS:

1st and 2nd place certificates to each US dist, KL7, KH6, and US Pacific Island, each VE dist, Central America and Caribbean, South America, Europe, Africa and S. Atlantic, Asia, Australia, New Zealand, and S. Pacific.

ENTRIES:

Members only—send log information to: Grace Dunlap K5MRU, Box 13, Rand CO 80743, no later than August 30. Results will be published in the Net Fall Bulletin.

VHF SPACE NET CONTEST

Contest period is from 6 pm Saturday, July 15 to 9 pm Sunday, July 16 YOUR LOCAL TIME!

This event commemorates the 9th anniversary of Apollo II, man's first landing and walk on the moon, with activity on 50, 144, 20 MHz, etc., in all modes *except repeaters.*

EXCHANGE:

Signal report and zip code or PO locations if out of country.

SCORING:

Each contact is worth 2 points. The same station may be reworked on a different mode for added 2 points, and reworked again on different bands for additional 2 points. Each different zip code worked is one multiplier with all out of country contacts using the PO location as a zip code. Scoring is total of all QSO points multiplied by the total of different zip codes and PO locations.

CATEGORIES:

Class 1—100 to 500 Watts; Class 2—25 to 100 Watts; Class 3—5 to 25 Watts; Class 4—1 to 5 Watts; Class 5—CW only with any power; Class 6—XYL only with any power; Class 7—club participation.

AWARDS AND ENTRIES:

Highest score in each category receives a trophy plaque; all second and third high scores will receive a space net certificate. Mailing deadline of logs is August 10. Mail all entries to: VHF Space Center, K4AWS, Box 15, Sumterville FL 33585. There will be a special bonus surprise for all stations working the space net center during the contest.

THE COLOMBIAN INDEPENDENCE DAY CONTEST

This activity commemorates the 167th independence anniversary and is intended to promote and increase the DX activity of HK radio amateurs. Entry classifications include: single-op/single band, single-op/multiband, and multi-op/multiband/one rig. Band used may be any amateur band from 80 to 10 meters, phone, SSB, or CW modes. Contest call is "CQ HK CONTEST."

EXCHANGE:

RS(T) plus 3-digit serial QSO number, HK station's RS(T) and HK prefix.

SCORING:

Each HK QSO counts 5 points. QSOs with another continent count 3 points. QSOs in same continent but different country are 2 points, and same country are 1 point each. Multiplier is total number of different countries worked on *all bands.* Final score is sum of QSO points on each band multiplied by the sum of different countries worked on each band.

AWARDS:

Sterling silver cup trophy to world winner of the contest; silver plates to continental winners and class winners.

RESTRICTIONS:

Minimum of 50 QSOs must be shown in logs to be eligible for any award. Only one contact per band with the same station will be permitted. No cross-band or crossmode contacts. Club stations can only take part as multi-op/multi-band/single transmitter class. Violation of the regulations of amateur radio in the country of the contestants, or the rules of the contest, or taking credit for incorrect QSOs or multipliers, or duplicate contacts in excess of 2% of the total made, will be deemed sufficient cause for disqualification. The LCRA Contest Awards Committee decision shall be final.

ENTRIES:

Logs must show date/time in GMT; keep separate log sheets for each band. Enter country only the first time it is contacted. Each entry must be accompanied by a summary sheet listing all scoring information. All logs must be postmarked no later than Sept. 30 and mailed to: LCRA—Concurso Independencia, C/O Contest Committee Manager, Apartado Postal 584, Bogota, Colombia, S.A.

RHODE ISLAND QSO PARTY

Contest Periods:
1700 GMT Saturday, July 22 to 0500 GMT Sunday, July 23
1300 GMT Sunday, July 23 to 0100 GMT Monday, July 24

Sponsored by the East Bay Amateur Wireless Association. RI stations work other RI stations and the rest of the world—others work RI only. The same station may be worked once per band and mode.

EXCHANGE:

RS(T), QTH—state, province, or country; RI send county.

SCORING:

RI stations score 2 points per QSO; RI Novice and Tech stations score 5 points per QSO. Others score 2 points per RI QSO and 5 points per QSO with RI Novice or Tech. RI Novice and Tech sign with /N or /T to designate license class. RI multiply total QSO points by the number of RI counties, states, provinces, and DX countries worked. Others multiply total QSO points by the number of RI counties worked (5 max.). All stations—score 10 points for QSO with multi-op station operated by club members N1RI.

FREQUENCIES:

Phone—3920, 7260, 14300, 21360, 28600, 50.3, 145.1.

CW—1810, 3550, 3710, 7050, 7110, 14050, 21050, 21110,

CALENDAR

July 1-2*	Seven Land QSO Party
July 4	ARRL Straight Key Night
July 8-9	IARU Radiosport Competition
July 15	Colorado YL Field Day
July 15-16	10-10 Net Summer QSO Party
	VHF Space Net Contest
	Colombian Independence Day Contest
July 22-24	Rhode Island QSO Party
July 29-31	CW County Hunters Contest
	New Jersey QSO Party
Aug 19-20	SARTG Worldwide RTTY Contest
Sept 9-10	ARRL VHF QSO Party
	Pennsylvania QSO Party
Sept 16-18	Washington State QSO Party
	Scandinavian Activity Contest—CW
Sept 23-24	Scandinavian Activity Contest—SSB
	Delta QSO Party
Oct 7-8	VK/ZL/Oceania DX Contest—Phone & RTTY
Oct 14-15	VK/ZL/Oceania DX Contest—CW
	ARRL CD Party—CW
Oct 21-22	ARRL CD Party—Phone
Nov 4-5	ARRL Sweepstakes—CW
Nov 11	OK DX Contest
Nov 18-19	ARRL Sweepstakes—Phone
Dec 2-3	ARRL 160 Meter Contest
Dec 9-10	ARRL 10 Meter Contest

* = described in last issue

28050, 28110.

Use of FM simplex is encouraged, but no repeaters!

AWARDS:

Certificates will be awarded to the top scoring station in each RI county, state, province, and DX country; the top scoring Novice and Technician station in each RI county and state; and the ARC in each state, province, and DX country that submits the highest aggregate score (min. 3 logs per club).

ENTRIES:

Logs must show date/time in GMT, call, exchange, band, and mode. On a separate sheet show name, call and mailing address, club affiliation, if any, total QSO points, multiplier, claimed and final scores. Send logs and summary postmarked no later than Aug. 31 to: East Bay Amateur Wireless Assoc., PO Box 392, Warren RI 02885. Include an SASE for results.

RESULTS

RESULTS OF THE 10-10 INTERNATIONAL NET WINTER QSO PARTY FEB. 11-12, 1978

Top Ten

W7ZR	1391/2497
VE7CMN	1313/2334
K7CZ	1035/1793
WB7ERF	924/1651
VE7CML	899/1609
WB6JPY	870/1583
WB7BFK	818/1493
K7PVZ	817/1480
K3LYW	833/1442
KØGU	859/1433

Top Ten Chapters

Cal. Bay Area	11293/21479
So. N.E. Nutmeg	11447/21459
Colorado	11475/20851
Gateway	8748/16474
Sky Blue Waters	7848/14838
White House	7707/14024
C.A.T.T.	6387/11829
Minute Man	4213/7825
Grand Canyon	3645/6477
King Salmon	3378/6101

U.S. District Leaders

1.	W1GUC	509/909
2.	K9EGA/2	836/1389
3.	K3LYW	833/1442
4.	WB4NDX	605/1025
5.	WA5JDU	600/1059
6.	WB6JPY	870/1583
7.	W7ZR	1391/2497
8.	WB8EDG	625/1097
9.	WB9WFZ	314/565
Ø.	KOGU	859/1433
KG6.	KG6JIA	949/1196
KH6.	WB4OGP/KH6	432/746
KL7.	KL7GRP	292/533

Multi-Op Stations

W8WD	808/1351
W9NIN	617/1077
VE2DZE/VE3	196/360

Canadian and DX Leaders

VE1.	VE1ASU	176/313
VE2.	VE2DZO	381/641
VE3.	VE3IDJ	166/310
VE4.	VE4OY	300/561
VE5.	VE5QY	205/373
VE6.	VE6ATT	246/441
VE7.	VE7CMN	1313/2334
Can. America	TI2NA	588/1056
So. America	LU7FAG	163/386
Europe	DK5UG	219/410
Africa	EL2AK	74/138
Asia	JA3XOG	215/401
ZL-VK	ZL3SW	144/269

CW COUNTY HUNTERS CONTEST

Starts: 0000 GMT July 29
Ends: 0200 GMT July 31

The CW County Hunters Net invites all amateurs to participate in the 1978 CW County Hunters Contest with all mobile and portable operation in less active counties welcomed and encouraged. General call is "CQ CH." Stations may be worked once per band and again if the station has changed counties. Portable/mobile stations changing counties during the contest may repeat contacts for QSO points. Stations on county lines give and receive only one QSO number per contact, but each county counts for a multiplier.

EXCHANGE:

QSO number, category (P = portable, M = mobile), RST, state, province, or country, and county if US.

FREQUENCIES:

3575, 7055, 14070, 21070, 28070. It is requested that only P or M category stations call CQ or QRZ on 40 meters below 7055 and on 20 meters below 14070, with all stations spreading out above those frequencies.

SCORING:

QSOs with fixed stations count 1 point, portable/mobile stations = 3 points; multiply QSO points times number of US counties worked for final score. Mobiles/portables calculate their score on the basis of total contacts within a state.

AWARDS:

Certificates awarded to highest scores in three categories: F—highest fixed or fixed portable in each state, province, and country with 1,000 or more points; P—highest station operating portable (not normal point of operation) with 1,000 or more points; M—highest mobile in each state operating from 3 or more counties with a minimum of 10 QSOs per county.

Trophies to highest single-operator station in categories P and M in the USA. Additional awards where deemed appropriate.

ENTRIES:

Logs must show category, date/time in GMT, station worked, exchanges, band, QSO pts, location, and claimed score. All entries with 100 or more QSOs *must include a check sheet* of counties worked or be disqualified from receiving awards. Enclose a large SASE if results are desired. Logs must be postmarked by Sept. 1 and sent to: CW County Hunters Net, c/o Jeffrey P. Bechner W9MSE, 673 Bruce St., Fond du Lac WI 54935.

NEW JERSEY QSO PARTY

Contest Periods:
2000 GMT Saturday, July 29 to 0700 GMT Sunday, July 30
1300 GMT Sunday, July 30 to 0200 GMT Monday, July 31
(Please note the date change from the original announced weekend)

Sponsored again by the Englewood ARA, all amateurs the world over are invited to take part in the 19th annual event. Phone and CW are considered the same contest. A station may be contacted once on each band; phone and CW considered separate bands, but CW contacts may not be made in phone band segments. NJ stations may work other NJ stations. General call is "CQ NJ" and NJ stations are requested to identify themselves by signing "DE NJ." Stations planning active participation in NJ are requested to advise the EARA by July 8 of their intentions so that plans can be made for full coverage from all counties. Portable and mobile operation is encouraged.

EXCHANGE:

RS(T), QSO number and ARRL section or country, NJ county for NJ stations.

FREQUENCIES:

1810, 3535, 3905, 7035, 7135, 7235, 14035, 14280, 21100, 21355, 28100, 28600, 50-50.5, and 144-146. Suggest phone activity on the even hours, 15 meters on the odd hours (1500 to 2100 GMT), 160 meters at 0500 GMT.

SCORING:

Out-of-state stations multiply number of QSOs with NJ stations times the number of NJ counties worked (21 max.). NJ stations: W-K/VE-VO count 1 point, DX count 3 points per QSO. Multiply total number of QSO points times the number of ARRL sections (including NNJ and SNJ—max. 75). KP4, KH6, KL7, KZ5, etc., count as 3-point DX contacts and as section multipliers.

AWARDS:

Certificates will be awarded to the first place station in *each* NJ county, ARRL section, and country. In addition, a second place certificate will be awarded when 4 or more logs are received. Novice and Technician certificates will be awarded as well.

ENTRIES:

Logs must show GMT date and time, band, mode, and be received not later than Aug. 26. The first contact for each claimed multiplier must be indicated and numbered and a checklist of contacts and multipliers should be included. Multi-op stations should be noted and calls of participating operators listed. Logs and comments should be sent to: Englewood ARA, Inc., PO Box 528, Englewood NJ 07631. A size #10 SASE should be included for results.

COLORADO YLs SYLVER DOLLAR AWARD

Contact and QSL 5 Colorado YL members; DX only need 3. Award has pictures of station worked with endorsement credit and pictures for additional contacts. Send list of contacts made and QSLed showing log data along with 50¢; DX send 2 IRCs. For endorsements, send as above with 10¢ and SASE. Mail to Club Station Trustee, WAØESM, 15715 N. 107th, Longmont CO 80501.

Looking West

Bill Pasternak WA6ITF
24854-C Newhall Ave.
Newhall CA 91321

SUN DAY IN THE SOUTHLAND

How did you celebrate Sun Day? A number of Los Angeles area amateurs went all out to make Sun Day in L.A. one to be remembered. The WR6AUG Solar Power Amateur Radio Repeater Group, the Canyon Repeater Association, and a number of other area amateurs joined forces, and through their efforts Los Angeles Mayor Tom Bradley was treated to his first solar-powered autopatch telephone conversations.

The idea of demonstrating a solar-powered amateur radio telephone link was conceived by the Atlantic Richfield Solar Technology Company and the WR6AUG Solar Power Amateur Radio Repeater Group. For the demonstration, Atlantic Richfield provided the solar panels, Pacesetter Systems, Inc., provided all necessary electronic test equipment, and the Canyon Repeater Association of Sylmar, California, made available the WR6AWQ 220 MHz autopatch repeater. WR6AWQ is located atop a "bump" known as Loop Canyon Summit (4500' plus) and has the ability to reach almost anywhere. This ability was to be well tested during the Sun Day demonstration.

The plan seemed simple enough. Two telephone calls were to be placed which would permit Mayor Bradley to speak with Deputy Secretary of Energy John O'Leary and Congressman Ryan, Chairman of the Congressional Subcommittee on Energy and Energy Resources, both in Washington DC. To be sure that the demonstration could take place, a test run was made on the Monday prior to the actual event by WR6AUG trustee Dr. Joseph Schulman K6BWA. For the test, a 220 MHz Wilson hand-held was fitted to an external Larsen 5/8-wave antenna. All seemed to work well. Looked like a snap, according to Joe. Then, on Tuesday evening when a full duplex test involving the public address system was attempted, the fickle finger of fate struck. The "path" from downtown LA at the park across from City Hall to Loop Canyon Summit had gone sour. While the repeater was only about 25 miles from the demonstration site, rf in both directions had to cross some rugged terrain which included a few "bumps" that cast rf shadows of the worst kind. To remedy this situation, two steps were taken. First, Jim Hendershot WA6VQP, trustee of WR6AWQ, drove up to the Loop Canyon site at a bit past midnight and disabled AWQ's final power amplifier. This was to minimize any desensitization to the repeater's receiver. Secondly, the Wilson/Larsen combo was replaced by a Midland 13-509 10-Watt radio and an 11-element Hy-Gain beam. Another 13-509 was jeeped (wired directly) to the PA system so that both sides of the conversation could be heard at once by the spectators . . . full duplex!

To add to all the rest of the problems, when Sun Day morning came, it brought with it a distinct lack of California's most notable commodity, sunlight. Lou WA6EPD, Roy W6TSI, and Norm WB6DGF formed an instant antenna-pointing committee, and after a number of tests found a way to make the path cooperate. Somehow it all came together, and at the appointed hour the calls were placed through the WR6AWQ autopatch from a Midland 13-509 at LA City Hall Park operating off power provided by Mother Nature herself.

It should also be mentioned that there were contingency plans just in case the path to Loop Canyon had gone completely out. Both the WR6AYY and WR6ABC repeaters, located in the nearby Hollywood hills, were on "standby alert." While their facilities were not needed as it turned out, it was comforting for all to know that they were there just in case. AWQ, at a far greater distance and with its circularly-polarized antenna array, came through and made the overall demonstration far more dramatic, but none of this would have happened at all had not a group of amateurs from many repeaters gotten together and worked as a team to make everything tick like a well-oiled clock. The Mayor was happy, the people in Washington were happy, and once again amateurs had proved that anything could be done.

THANK YOU, OTTO; WELCOME, DENNIS

On or about June 1, 1978, Otto Arnosht WA6RMX will step down from the post of SCRA Two Meter Technical Committee chairman, one which he has held for the past year and a half. As a research psychologist, Otto brought a new dimension to the world of voluntary frequency coordination: knowledge of the science of people. Otto has become known as the "peace maker" around these parts, and in the time he has served as chairman, he has never had a problem for which he and his committee could not find a solution. Otto will be missed by many of us who have learned much by watching him. He resigned in order to attend to other pressing matters outside amateur radio. He will be missed. The SCRA has announced that Dennis Romack WA6OYI will be the new Two Meter Technical Committee chairman. Dennis is from San Diego and is best known in amateur circles as Marketing Vice President of DSI. Dennis has in the past served on the Board of Directors for the San Diego Amateur Repeater Association (SANDRA), and is currently president of the 220 Club of San Diego, one of the nation's largest organizations dedicated to furthering the development of 220 MHz. LW joins with the rest of the southern California amateur community in welcoming Dennis to his new post.

VHF-UHF COORDINATION AND TECHNICAL SYMPOSIUM

TENTATIVE AGENDA

I. INTRODUCTORY SESSION: Bob Buaas, 9:00 to 10:00 AM September 23, 1978

- A. Welcoming
- B. Introduction of special guests and Session leaders.
- C. Overview of the sessions that will be running con-currently throughout the day

II. BREAK: Coffee and snacks provided by ______________Club. 10:00 to 10:20

III. PARALLEL SESSIONS RUNNING UNTIL LUNCH AND AFTER LUNCH to 4:30 PM

COORDINATION SESSION
Chaired by Bill Pasternak

A. National Input from represented areas of U.S. as to how Coordination is now done.

B. Protection of Non-Relay Interests
1) Sideband
2) Satellite
3) FM Simplex
4) Weak Sig., EME, ATV, etc.

C. Enforcement of Coordination
1) Amateur - DFing
2) Peer Pressure
3) FCC

D. Looking at Spectrum Management
1) Present uses of spectrum
2) How could spectrum space be better conserved?
3) Looking 10 years ahead

NON-RELAY COMMUNICATIONS SESSION
Chaired by Lou Anxiaux

A. Simplex: Sideband & FM

B. EXOTIC MODES: EME, OSCAR, ATV, RTTY, COMPUTERS

REPEATER SESSION
Chaired by Bob Thornburg

A. Repeater Techniques
1) Circular Polarization
2) Beeps for re-set
3) Hi/Low beeps
4) Semi tone squelch
5. Specialized: RTTY, ATV, Sideband, etc.

B. Repeater User Control
1) Open vs Closed Repeaters
2) Open PL
3) Jamming, Bad Language, Offensive interjections
4) Westlink
5) Autopatch Control

C. Remote Control Techniques
1) CACTUS: What is it?
2) Telemetry
3) HF Tranceivers/Antennas
4) Simplex Autopatch
5) Microprocesser Control

D. Advances in DF Techniques
1) T-Hunts
2) Commercial units
3) Amateur built units

THE BIG MEETING

I recently promised that as soon as a tentative agenda for the September 23, 1978, National Voluntary Coordination, Band Planning, and Technical Advances Seminar in San Diego was available, I would bring it to you. If, after reading it, you wish to take part, drop a note to SCRA, PO Box 2606, Culver City CA 90230, for a complete information packet on the meeting and the convention it is a part of. Hope to see you in San Diego.

Ham Help

I'm interested in hooking up a low-frequency multiband antenna that operates efficiently and effectively on a motor home. I would like the system to be usable, if possible, while in motion. Any help would be appreciated.

James V. Devilbiss WA3FUJ
915 Pine Ave.
Frederick MD 21701

Can anyone loan (to be copied and returned, with postage paid both ways by me) an instruction book and/or schematics for a Knight T-60 transmitter and a Heathkit HR-10B receiver? Any help concerning the loading of the Knight T-60, which is equipped with a relative power meter, will be especially appreciated.

Edwin R. Lappi WD4LOO
109 Lynn Drive
Carrboro NC 27510

RTTY Loop

Marc I. Leavey, M.D. WA3AJR
4006 Winlee Road
Randallstown MD 21133

The more observant among you have probably noticed that there is a computer listing printed in this month's column. This is the implementation of the simple Baudot receiving program outlined last month. I realized that, although RTTY and computers are natural partners, some of you are not at all interested in reading any more about microprocessors. You all may skip to the end of the column, where some questions from readers are answered. For the bulk of you, here we go!

The program, as written, is configured for the SWTPC 6800 computer, and resides in RAM at addresses 0020H to 015AH. (Throughout this article, hexadecimal numbers will be identified with the suffix "H", as 1234H. Numbers without an "H" are decimal.) It assumes that a parallel interface (MP-L or MP-LA PIA card) is located at port #7, address 801CH, and that the B side is configured as an input. Two routines from MIKBUG, or SWTBUG, the resident ROM monitor, are called. OUTEEE, at E1D1H, puts the data in the A accumulator out to the terminal as an ASCII character. PDATA, at E07EH, puts the data pointed to by the index register out to the terminal as an ASCII string, until an EOT (04) character is read, which terminates the routine. Users of other 6800 systems may implement the program by changing necessary addresses as needed to suit their systems.

As described last month, the required input is to bit 0 of the PIA, side B, as written. A reed relay inserted in the loop and connected to the PIA, with an appropriate pull-up resistor as outlined last month, is one way to interface a TTY loop. Users of demodulators which have an RS-232 output, such as the ST-6, may connect them directly. With the ST-6, for example, the appropriate line is labeled the "FSK" output, and is standard RS-232C logic. It measures about five volts negative on mark and five volts positive on space. This is exactly what we want; no pull-up or other components are required.

Examining the program, we find that the first 256 bytes are used for tables, strings, and storage. The Letters and Figures tables carry the Baudot data in the binary progression detailed in "RTTY Loop" last July. Remember, however, that the data is complemented. That is, while "R" is 01010, binary, the encoded table form is 10101, with marks and spaces reversed. This is 15H, and if you add that to the starting address of the Letters table, 0020H, you get 0035H. The data at 0035H is 52H, and that is ASCII for "R". Okay? That's how the table works.

The main program starts at 0100H. After setting up the

```
                  NAM    B/A:3.0
                  OPT    O

                  ****************************
                  * BAUDOT RECEIVING PROGRAM *
                  *     FOR THE SWTPC 6800   *
                  *   VER 3.0 -- 18 APR 78   *
                  *   MARC I. LEAVEY, M.D.   *
                  *          WA3AJR          *
                  ****************************

                  ****** EXTERNAL ROUTINES
      E1D1        OUTEE  EQU    $E1D1
      E07E        PDATA  EQU    $E07E
      801E        PIDRB  EQU    $801E     * PIA DATA REG B - PORT 7
      801F        PICRB  EQU    $801F     * PIA CNTL REG B - PORT 7
      A048        PGCTR  EQU    $A048     * PROGRAM COUNTER

                  ****** TABLES AND STORAGE
                  * THE ASCII ENCODED DATA
                  * IS IN BAUDOT ORDER IN
                  * TWO TABLES: LTRS AND
                  * FIGS. NULL IS USED FOR
                  * CHARACTERS NOT DECODED
                  ******
0020                     ORG    $20
0020 7F           LTRTBL FCB    $7F       [LETTERS]
0021 4B                  FCC    \KQU\
0022 51
0023 55
0024 00                  FCB    0         [FIGURES]
0025 4A                  FCC    \JWAXFYSBDZEVCPIGRL\
0026 57
0027 41
0028 58
0029 46
002A 59
002B 53
002C 42
002D 44
002E 5A
002F 45
0030 56
0031 43
0032 50
0033 49
0034 47
0035 52
0036 4C
0037 00                  FCB    0         [LINE FEED]
0038 4D                  FCC    \MNH\
0039 4E
003A 48
003B 20                  FCB    $20       [SPACE]
003C 4F                  FCC    \O\
003D 00                  FCB    0         [CAR RET]
003E 54                  FCC    \T\
003F 00                  FCB    0         [BLANK]

0040 7F           FIGTBL FCB    $7F       [LETTERS]
0041 28                  FCC    \(17\
0042 31
0043 37
0044 00                  FCB    0         [FIGURES]
0045 27                  FCC    \'2-/!6\
0046 32
0047 2D
0048 2F
0049 21
004A 36
004B 07                  FCB    7         [BELL]
004C 3F                  FCC    \?$"3;:08&4)\
004D 24
004E 22
004F 33
0050 3B
0051 3A
0052 30
0053 38
0054 26
0055 34
0056 29
0057 00                  FCB    0         [LINE FEED]
0058 2E                  FCC    \.,# 9\
0059 2C
005A 23
005B 20
005C 39
005D 00                  FCB    0         [CAR RET]
005E 35                  FCC    \5\
005F 00                  FCB    0         [BLANK]

0060 0D           CRLFST FCB    $D,$A,$15,0,0,4
0061 0A
0062 15
0063 00
0064 00
0065 04

0066 0002         XSTORE RMB    2


                  ****** MAIN PROGRAM STARTS
                  ****** HERE
0100                     ORG    $100
0100 8E A070      START  LDS    #$A070    * SET UP STACK
0103 86 04               LDA A  #$4       * INITIALIZE THE PIA
0105 B7 801F             STA A  PICRB     *   AS AN INPUT
0108 B6 801E      SLOOP  LDA A  PIDRB     * L O O P   UNTIL
010B 4D                  TST A            *    START PULSE
010C 27 FA               BEQ    SLOOP     *      IS LOCATED
010E 8D 44               BSR    MSEC10    * DELAY 1/2 PULSE
0110 C6 05               LDA B  #$5       * SET UP COUNTER
0112 4F                  CLR A            * CLEAR ACCUMULATOR A
0113 48           CLOOP  ASL A            * SHIFT ACCUM-A LEFT ONE
0114 8D 3B               BSR    MSEC20    * DELAY ONE PULSE
0116 BA 801E             ORA A  PIDRB     * GET THE DATA INTO "A"
0119 5A                  DEC B            * DECREMENT THE COUNTER
011A 5D                  TST B            * COUNT = 0 ?
011B 26 F6               BNE    CLOOP     * NO -> GET NEXT BIT
011D 81 1D               CMP A  #$1D      * IS IT BAUDOT CAR-RET?
011F 27 28               BEQ    CRLF      * YES, DO A CR/LF
0121 81 04               CMP A  #$4       * IS IT BAUDOT FIGS?
0123 27 0F               BEQ    FIGS      * YES, SHIFT TABLES
0125 81 00               CMP A  #$0       * IS IT BAUDOT LTRS?
0127 27 04               BEQ    LTRS      * YES, SHIFT TABLES
0129 81 1B               CMP A  #$1B      * IS IT BAUDOT SPACE?
012B 26 10               BNE    GETCHR    * NO, PUT IT OUT NOW.
012D CE 0020      LTRS   LDX    #LTRTBL   * LOAD INDEX WITH LTRS TABLE
0130 DF 66               STX    XSTORE    * STORE THAT AT MARKER
0132 20 09               BRA    GETCHR    * NOW GO PUT IT OUT
0134 CE 0040      FIGS   LDX    #FIGTBL   * LOAD INDEX WITH FIGS TABLE
0137 DF 66               STX    XSTORE    * STORE THAT AT MARKER
0139 8D 19               BSR    MSEC10    * DELAY 1/2 PULSE
013B 20 CB               BRA    SLOOP     * WAIT FOR NEXT INPUT
013D B7 0143      GETCHR STA A  LOCATE+1  * SET POINTER FOR TABLE
0140 DE 66               LDX    XSTORE    * GET CURRENT TABLE INDEX
0142 A6 00        LOCATE LDA A  X         * LOAD ACC-A AT POINTER
0144 BD E1D1             JSR    OUTEE     * PUT OUT TO TERMINAL
0147 20 BF               BRA    SLOOP     * START ALL OVER AGAIN


                  ****** SUBROUTINES

0149 CE 0060      CRLF   LDX    #CRLFST   * INDEX TO CR/LF STRING
014C BD E07E             JSR    PDATA     * PUT OUT TO TERMINAL
014F 20 B7               BRA    SLOOP     * RETURN TO WAIT ROUTINE

0151 8D 01        MSEC20 BSR    MSEC10    * TWO MSEC10'S=MSEC20
0153 01                  NOP
0154 CE 0430      MSEC10 LDX    #$430     * ADJUST DELAY FOR BEST COPY
0157 09           DLOOP  DEX
0158 26 FD               BNE    DLOOP
015A 39                  RTS


                  ****** PROGRAM COUNTER SET-UP
A048                     ORG    PGCTR
A048 0100                FDB    START
                         END

TOTAL ERRORS 00000


ENTER PASS : 1P,2P,2L,2T
```

stack and initializing the PIA, the program loops while waiting for the start pulse, which is always a space. Once located, the program loads the A accumulator with the five data bits, as detailed last month. That data is loaded into an offset located at 0143H, which serves as the pointer for the appropriate table. The current table in use is stored at XSTORE: two bytes located at 0066H and 0067H. After the data is acquired, but before it is put out, several special cases are tested for. A 1DH is carriage return, and causes a branch to a routine to put out a carriage return, line feed string which can be customized to the system. Here, a 15H is included to perform an erase to the end of the line. Receipt of LTRS or FIGS (00H or 04H) causes the data at XSTORE to be updated accordingly, and SPACE (1BH) forces Letters case, a software "downshift-on-space." Because of the special routines, several codes appear as 00 in the tables. FIGS, LINE FEED, and CARRIAGE RETURN are all ignored in the table decoding.

The delay routines, MSEC20 and MSEC10, depend on a counting loop from 0154H to 0159H. The DEX (Decrement Index Register) instruction requires four machine cycles, as does the BNE (Branch If Not Equal). Thus, the set of two instructions requires eight cycles per loop. If the cycle time is 1.1 µs, as with the SWTPC 6800, the execution of this loop 480H (1152) times would result in a 10.1376 ms delay—close enough to 11 ms when allowing for the rest of the program time. However, users of different systems may find adjustment of this value necessary to produce good copy, and it is suggested that it be used much as a Range adjustment on an old Model 15. Take the minimum and maximum values which give good copy and find the mean. Watch out for the hexadecimal arithmetic! Place the determined value at 0155H as the optimum delay value.

To use the program, set the program counter to 0100H and hit "G". With input on the PIA, the terminal should follow the incoming RTTY signal. Because the entire character should be completed *during* the STOP pulse, a terminal running at 300 baud works best. For faster terminals, an additional delay is needed to insure that when the character is finished, the STOP is being sent.

A note received from Norm Monro K4FRY touches on his hopes of putting the Kenwood 599D pair on RTTY. Any reader with experiences along these lines is invited to write Norm or this column. Another Kenwood owner, Manuel Marrero KP4EHE, Box 1828, Aquadilla PR 00603, needs help putting his Kenwood TS-520S on RTTY. I'm including Manuel's complete address to help those who might want to drop him a line.

In general, any information pertaining to putting this type of equipment on RTTY is welcome, and will be included in future columns, as received.

Another reader, David Baxter WA4JHH of Grenville KY, writes, in part:

"I have a Knight R-100A general coverage receiver. Is it possible to copy TTY with this receiver? What would be the most economical printer I could obtain ... that I could later use ... on the ham bands?"

First off, David, my recollection of the R-100A is that it was a budget receiver sold about ten years ago by Allied. The ones I saw were quite able to do a reasonable job copying sideband, and thus should be able to copy TTY without too much trouble. What you are looking for most is *stability*. After warming up, drifting 50 Hz or so would be intolerable. This is roughly the same degree of stability demanded for SSB, so if it is adequate for one, it should do for the other.

As to the printer, the most realistic answer is anything you can get that you can afford that works! I suspect that if you scout around at hamfests and ads, you may be able to pick up a Model 15 for less than $50. This is an entirely satisfactory printer, and can do quite well for many years. After you look around a bit, and perhaps after this column lets the Greenville community know you are looking, who knows what bargains you will stumble upon.

In future months, we will delve into some specific machines and phenomena, and answer more readers' questions. Drop me a line; let me know what *you* would like to see.

Corrections

You recently published an article of mine in the April issue entitled, "Build this Digital Ball Game." It has been brought to my attention that the schematic printed in the article has a couple of problems. On IC2, ground connections should be 2, 3, 6, 7, and 10. On IC3, the LEDs should be inverted and their anodes connected to +5 V. I can only attribute the error to my "newness" to digital electronics at the time of its writing. In the subsequent proofreadings, the error went unnoticed. I am sorry.

Ralph A. Giffone N2RG
Brooklyn NY

Please note a few corrections to my "FCC Math," May issue, p. 18 and p. 130:

(1) On p. 18, in the left-hand column, second paragraph from bottom, four lines down, "and that is about 9.2 x 10^1 or 92" should read "and *the square root* of that is about 9.2", etc.

(2) In the same column, last paragraph, fifth line down, there is a problem with "(100/10)·(100/10) = 10". The dot should be down, a period, not a multiplication as indicated.

(3) And, on p. 130, in the left-hand column, the square root sign in that asterisked footnote should have continued on over the numbers following the minus sign in both cases.

John Leahy WB6CKN
Gonzales CA

Two versions of the MK-III were constructed before I submitted the article ("Build This Excitingly Simple Receiver") which was published in the May issue on page 76. One version had the bias resistors for the MFE521 gate #1 (2.2k and 4.7k) connected as shown in the schematic, and the other had them connected to the bottom end of the secondary of T1. Unfortunately, I mixed them up and the printed circuit layout is for the latter method—it does not match the schematic. The receiver works equally well with either method, but I prefer the circuit incorporated in the printed circuit layout.

A 10 uF tantalum bypass capacitor should be shown on the schematic from the 7-volt line (regulated) to ground. It is incorporated in the printed circuit.

Ray Meglrian K4DHC
Deerfield Beach FL

OSCAR Orbits

The listed data tells you the time and place OSCAR crosses the equator in an ascending orbit for the first time each day. To calculate successive orbits, make a list of the first orbit number and the next twelve orbits for that day. List the time of the first orbit. Each successive orbit is 115 minutes later (two hours less five minutes). The chart gives the longitude of the first crossing. Add 29° for each succeeding orbit. When OSCAR is ascending on the other side of the world, it will descend over you. To find the equatorial descending longitude, subtract 166 degrees from the ascending longitude. To find the time it passes the North Pole, add 29 minutes to the time it passes the equator. You should be able to hear OSCAR when it is within 45 degrees of you. The easiest way to do this is to take a globe and draw a circle with a radius of 2480 miles (4000 kilometers) from the home QTH. If it passes right overhead, you should be able to hear it for about 24 minutes total. OSCAR will pass an imaginary line drawn from San Francisco to Norfolk about 12 minutes after passing the equator. Add about a minute for each 200 miles that you live north of this line. If OSCAR passes 15 degrees from you, add another minute; at 30 degrees, three minutes; at 45 degrees, ten minutes. Mode A: 145.85-.95 MHz uplink, 29.4-29.5 MHz downlink, beacon at 29.502 MHz. Mode B: 432.125-.175 MHz uplink, 145.975-.925 MHz downlink, beacon at 145.972 MHz.

Oscar 7 Orbital Information

Orbit	Date (July)	Time (GMT)	Longitude of Eq. Crossing °W
16579 Bbn	1	0134:12	81.6
16591 Abn	2	0033:32	66.4
16604 Bbn	3	0127:50	80.0
16616 Bbn	4	0027:10	64.9
16629 Abn	5	0121:27	78.5
16641 Bbn	6	0020:48	63.3
16654 Bbn	7	0115:05	76.9
16666 Abn	8	0014:26	61.7
16679 Bbn	9	0108:43	75.3
16691 Bbn	10	0008:04	60.2
16704 Abn	11	0102:21	73.8
16716 Bbn	12	0001:41	58.6
16729 Bbn	13	0055:59	72.2
16742 Abn	14	0150:16	85.8
16754 Bbn	15	0049:36	70.6
16767 Bbn	16	0143:54	84.2
16779 Abn	17	0043:14	69.1
16792 Bbn	18	0137:31	82.7
16804 Bbn	19	0036:52	67.5
16817 Abn	20	0131:09	81.1
16829 Bbn	21	0030:30	66.0
16842 Bbn	22	0124:47	79.5
16854 Abn	23	0024:08	64.4
16867 Bbn	24	0118:25	78.0
16879 Bbn	25	0017:45	62.8
16892 Abn	26	0112:03	76.4
16904 Bbn	27	0011:23	61.3
16917 Bbn	28	0105:41	74.9
16929 Abn	29	0005:01	59.7
16942 Bbn	30	0059:18	73.3
16955 Bbn	31	0153:36	86.9

places. You can consult on purchases. We often use them for talking with someone on the roof or a tower working on an antenna.

A group of us go skiing, each with an HT in the pocket. it makes it a whole lot more fun.

A few years ago, i used to have an HT on my belt at hamfests, but now that almost every ham has one, it is too difficult to find an unused channel, so I seldom even try. It sure used to be fun at Saroc a few years ago, keeping in touch with the FM gang, complete with the mysterious workings of the Gronk Network, which would let you talk all the way from Vegas to San Diego or out to Phoenix. Those were the years before Saroc got ruined by commercial exploitation.

Wayne Green W2NSD/1
Editor/Publisher

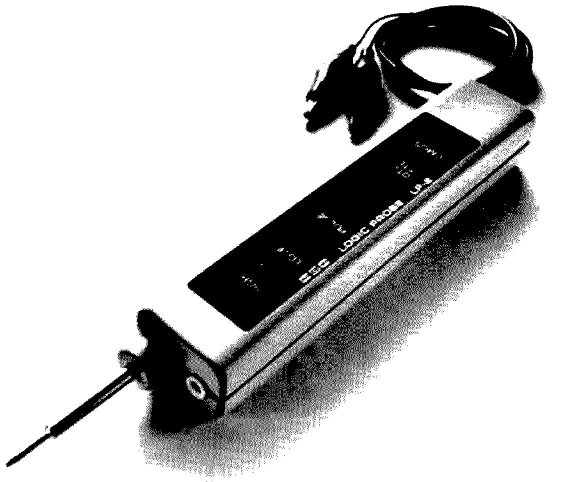

CSC's LP-2 logic probe.

PALOMAR ELECTRONICS DC-30 ANSWERS NEED FOR REGULATED 12-VOLT HIGH-CURRENT POWER SUPPLY

The Palomar DC-30 is a power supply for regulated 12-volt high-current requirements.

Its modular concept in a heat-sink chassis design delivers more efficient performance and longer life than old-style power supplies.

The Palomar DC-30 is designed and built to handle continuous loads up to 30 Amperes, with a momentary load capability 20% above the 30 Amp rating. Line voltage and load changes are fully compensated by the regulator. No overshoot on turn-on/turn-off or power failure.

The DC-30 is another example of the advanced technology from *Palomar Electronics, 665 Opper Street, Escondido, California 92025.*

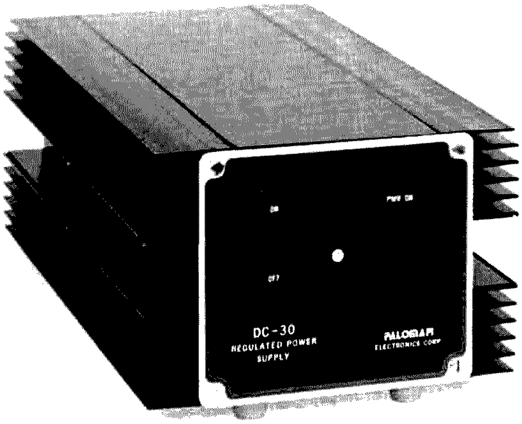

Palomar's DC-30 power supply.

CSC LP-2 LOGIC PROBE

Most economical of the three logic probes in Continental Specialties Corporation's *The Logical Force*™ is the versatile, inexpensive multi-family LP-2.

The LP-2 boasts a 300,000-Ohm input impedance, separate high and low LED logic state readouts, switch-selectable DTL/TTL or HTL/CMOS operation, and a pulse-stretching pulse-readout LED that responds with a blink to single pulses as fast as 300 nsec, and flashes at a 3 Hz rate to pulse trains up to 1.5 MHz.

Power is drawn from the circuit under investigation. Probe tips and power connectors are interchangeable with optional accessory configurations.

The Continental Specialties Corporation LP-2 logic probe is available at leading electronics dealers and distributors worldwide or direct from factory. For further Information, contact *Continental Specialties Corporation, 70 Fulton Terrace, New Haven, Connecticut 06509; (203)-624-3103; TWX (710)-465-1227.*

HELIWHIP DIPOLES FOR FIXED STATION OPERATION

Since joining the ranks of apartment dwellers a few years ago, as well as doing an increasing amount of operation from hotels and other temporary locations in Europe, I have experimented with many antennas of all sorts in an effort to find something capable of producing a useful signal while being small and easy to install and, at the same time, keeping TVI and RFI to a minimum.

After working my way through countless endfed wires, dipoles, and verticals with consistently disappointing results, I discovered the Anixter-Mark model HWD Heliwhip dipoles for fixed station operation. The Heliwhip antennas combine reasonable performance with a high degree of portability and ease of installation, providing an excellent answer to HF operation where space is restricted or it is not possible to put up a full-sized antenna.

The Heliwhip's end load concept reduces the overall length of the antenna to a manageable size which can be fixed mounted or rotated manually or with even the smallest TV rotator. The antenna is a true dipole so it is not necessary to provide a ground plane for it to work against. Construction of the dipoles is rugged, weatherproofed, and they will handle a full kilowatt.

The end loaded concept allows the length of the antenna to be reduced with only a slight loss in efficiency compared to a full-sized dipole. The dipoles are helically wound sections so proportioned as to result in a current distribution on the shortened dipoles which is essentially uniform and which produces a 50-Ohm match at the resonant frequency. When mounted in the clear, the antennas show very low reflected power.

Either vertical or horizontal polarization can be used, the important consideration being to avoid the closeness of metal objects which detune the dipoles. In restricted installation such as attics or near the ground, the Heliwhip dipoles show less coupling and detuning effects than do full-sized dipoles or ground-plane-type antennas.

The HWD dipoles come with a clamp which allows clamping to a 1-inch mast. For optimum match, the mast should be insulated, such as a wood pole. An SO-239 connector is mounted on the dipole's center block for easy connection to the coax feedline.

For horizontal polarization, a typical installation would use a 1-inch mast to raise the dipole clear of the tower or other supporting structure and any other nearby antennas, or other objects which could have a detuning effect. If it is not possible to mount the antenna in the clear and, instead, it must be placed in an attic or an apartment room, the detuning effects can be tuned out.

One end of the dipole is permanently attached to the center mounting block. This is the "hot" side of the antenna and the tuning is done on this element. The tuning sleeve can consist of a 7-inch piece of aluminum tubing slipped over the dipole. Any conducting metal can be used in place of the aluminum. Also, a piece of aluminum foil can be used and wrapped around the dipole element. The sleeve should be slipped over the end loading coil to the point where the edge of the sleeve just covers the start of the loading coil and most of the sleeve is resting on the covered fiberglass rod.

Table 1. Note 1: Since the operating bandwidth of the HWD-40 is not sufficient to cover the entire 40 meter band, a tuning sleeve is provided to allow the selection of the desired portion of the band.

Model	Length	Center Frequency	Bandwidth for 2:1 swr
HWD-10	8 ft.	29 MHz	1000 kHz
HWD-15	12 ft.	21.250 MHz	500 kHz
HWD-20	12 ft.	14.150 MHz	300 kHz
HWD-40	16 ft.	7.050 MHz	100 kHz (note 1)

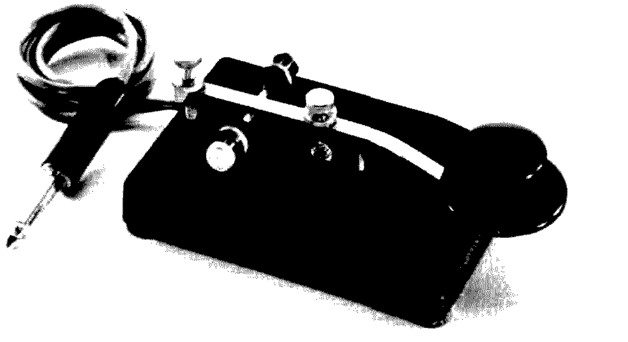

The new Nye Viking "Master Key," representing the first major improvement in telegraph key design in 50 years.

Connect an swr meter in the line and, using low power, tune the transmitter to the desired center frequency of operation. While carefully observing the reflected power, slowly slide the sleeve from its present position to cover more of the loading coil. Somewhere in this adjustment, a minimum swr will be reached. The swr will depend upon the degree of detuning from nearby objects in the field. Better than 1.5 to 1 should be possible in any condition with careful adjustment.

The above procedure will permit easy adjustment to any frequency in the band. With the sleeve removed, the frequency will be as shown in the table. As the sleeve is moved towards the end of the dipole, the inductance is decreased and the resonant frequency is increased.

Heliwhip dipoles really work. Using the 15 meter model temporarily mounted about 25 feet above ground and using approximately 10 Watts during a period of rather spotty conditions, WAC was easily made and more than 30 countries worked in the course of a couple of weeks of casual operation. The 10, 20, and 40 meter models have displayed a comparable level of performance.

For further information on the HWD Heliwhip dipoles, write *Anixter-Mark, 5439 West Fargo Avenue, Skokie IL 60076.*

Morgan W. Godwin W4WFL
Peterborough NH

NEW BIDIRECTIONAL WATTMETER FROM HEATH

Heath Company, the world's largest manufacturer of electronic kits, has released a new wideband bidirectional wattmeter.

The IM-4190 (SM-4190 assembled version) is a self-contained unit that measures transmitted radio power up to 300 Watts and reflected power up to 30 Watts. Covering the 100 MHz to 1 GHz spectrum, the IM-4190, according to Heath, is an ideal tool for two-way radio service and repair or for the amateur radio enthusiast. The IM-4190 is capable of withstanding full power overloads on its lower scales without damage to the meter movement. A single 9-volt battery powers the IM-4190 so it may be used portably. N-type coax connectors are utilized for minimal high-frequency insertion loss. Adaptors for use with rf-type connectors are included.

The IM-4190 kit retails for $114.95 and the SM-4190 assembled version $195.00 (mail order Benton Harbor). For more information on the IM/SM-4190, write *Heath Company, Dept. 350-630, Benton Harbor, Michigan 49022.*

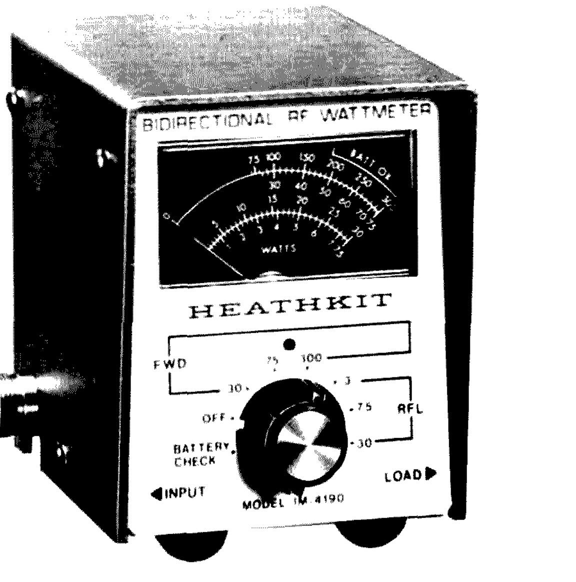

Heath's new bidirectional wattmeter.

NYE VIKING MASTER KEY

The William M. Nye Company announces another new addition to their Nye Viking line of products with the introduction of the "Master Key"—the first major design change in telegraph keys in over 50 years. It is designed for the expert and perfect for the beginner!

Prime feature of the Master Key is a contact assembly isolated to keep the keying circuit separated from the base, the key arm assembly, and all exterior metallic parts. Thus, shock hazard is greatly reduced. With its heavy die-cast body and non-skid feet, the key does not need to be secured to the operating desk, nor does it require a sub-base. As with all Nye Viking keys, the contacts are gold-plated silver for sharp, sure sending. The base of the Master Key has a black wrinkle finish with nickel-plated exterior hardware. The adjustable action key arm is fitted with a Navy knob. The Master Key comes complete with 3 feet of two-conductor cord with attached 1/4" plug at a list price of $19.50.

This new product joins the famous-for-quality Nye Viking line that includes: Speed-X and Super Squeeze Keys, iambic keyers, low-pass filters, antenna impedance matching networks, and phone patches. All are manufactured by *Wm. M. Nye Company, Inc., 1614-130th Avenue N.E., Bellevue, WA 98005,* and are available at dealers throughout the U.S.A.

CHEMTRONICS ANNOUNCES THE SD5 MODULAR SOLDER/DESOLDER SYSTEM

Chemtronics, Inc., a leading manufacturer of solder and aerosol chemicals for industry, recently announced its new SD5 modular solder/desolder system. Designed to place both solder and desolering wick right at the user's fingertips,

The Chemtronics SD5 solder/desolder system.

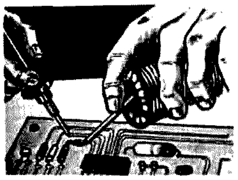

Telescoping Teflon* probe for precision application in high-density circuits

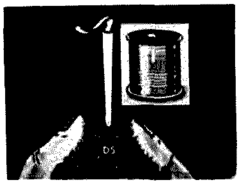

Snap D5 out of solder spool and pocket it for maximum convenience

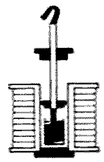

Modular construction—D5 tool is removable; 2½" probe snaps into wick refill

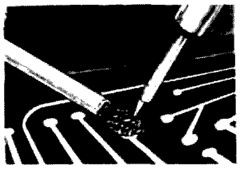

With D5, you can shape or web the wick for greater absorbency

The "System".

*Teflon is a registered DuPont Trademark

EXPERIENCE. There's no substitute for it. And TEN-TEC has it. More experience in solid-state HF technology than any other amateur radio manufacturer. Because TEN-TEC produced the *first* all solid-state HF transceiver for amateur radio. So, it stands to reason that the latest generations (the 540/544 models) benefit the most from that experience — in features, reliability, and operating ease. They are the "voices of experience."

TAKE MECHANICAL DESIGN. Experience tells us: make it rugged. So, like all fine solid-state devices such as computers and good test equipment, the 540/544 transceivers have their strength built into the chassis — the case is merely a cover. Ruggedness is carried over into the circuit boards as well. Component leads are "clinched," not just inserted, to give additional strength and to prevent annoying intermittents.

TAKE PHYSICAL APPEARANCE. Experience tells us: keep it simple. WWII is over, so is its technology, so why should your transceiver look like war surplus? The 540/544 transceivers look like tomorrow — small because technology makes it possible — few controls for the same reason. And they're elegantly handsome with black cases and brushed aluminum front panels.

TAKE ELECTRICAL DESIGN. Experience tells us: push the state-of-the-art. Example: we pioneered high power solid-state design for HF amateur radio gear. The advantages are numerous: efficient, small size, no lethal voltages, less heat, longer life, greater reliability. Example: broadband design. The advantages: easier operation for everyone, rag-chewers, DX chasers, even net operators. No out of reasonance danger, no need for a dummy load to prevent tune-up QRM, no boring, time-consuming "tune-up" procedures. Another example: computer aid. In circuit design, in manufacturing, for speed and optimization. Example: computer compensating oscillator drift to achieve rock-like stability.

TAKE SERVICING. Experience tells us: make it easy, for everyone. So the 540/544 transceivers have modular design with plug-in circuit boards. And trouble-shooting (if it's ever needed) can be done by you with ordinary test equipment. (Of course, Ten-Tec service people are ready to help).

TAKE OPERATING CONVENIENCE. Experience tells us: everyone wants it. Examples: high sensitivity with low internal noise makes the 540/544 transceivers great for DX, especially during poor band conditions. Full break-in on CW turns conventional QSOs into interesting conversations. Pre-selectable ALC gives automatic level control at various input powers (40-200 watts) plus optimized input power for linear amplifiers. "Semi-hard" keying effectively penetrates pileups, QRM, and QRN, yet is highly articulate and pleasant to copy. Pulsed calibrators are easy to identify. VOX that eliminates "anti-VOX" by triggering on a tone present in your voice but not in the transceiver speaker. (There are even more conveniences in the following "features" list.)

FEATURES — • Instant Band Change (no xmtr. tune-up) • Covers 3.5 to 30 MHz (plus One-Sixty with option) • 200 Watts Input — *all* bands • Receiver Sensitivity 0.3 uV • VFO changes less than 15 Hz per F° after 30 min. warm-up • 8-pole Crystal IF Filter • Direct Readouts — choose LED digital model or 1 kHz dial model • Optional 150 Hz CW filter • Optional Noise Blanker • Offset Tuning • WWV at 10 & 15 MHz • Separate Receive Capability • Automatic Sideband Selection, Reversible • Sidetone Level and Pitch control • Pre-Setable ALC • 100% Duty Cycle • S Meter and SWR Bridge • LED indicators for ALC and OFFSET • Modular Plug-In Circuit Boards • Broad Accessory Line

544 Digital — $869 540 Non-Digital — $699

Give your voice the Ten-Tec "Voice of Experience" treatment. See the 540/544 transceivers at your Ten-Tec dealer or write for full details.

arma

TEN-TEC, INC.
SEVIERVILLE, TENNESSEE 37862

THE VOICE OF EXPERIENCE

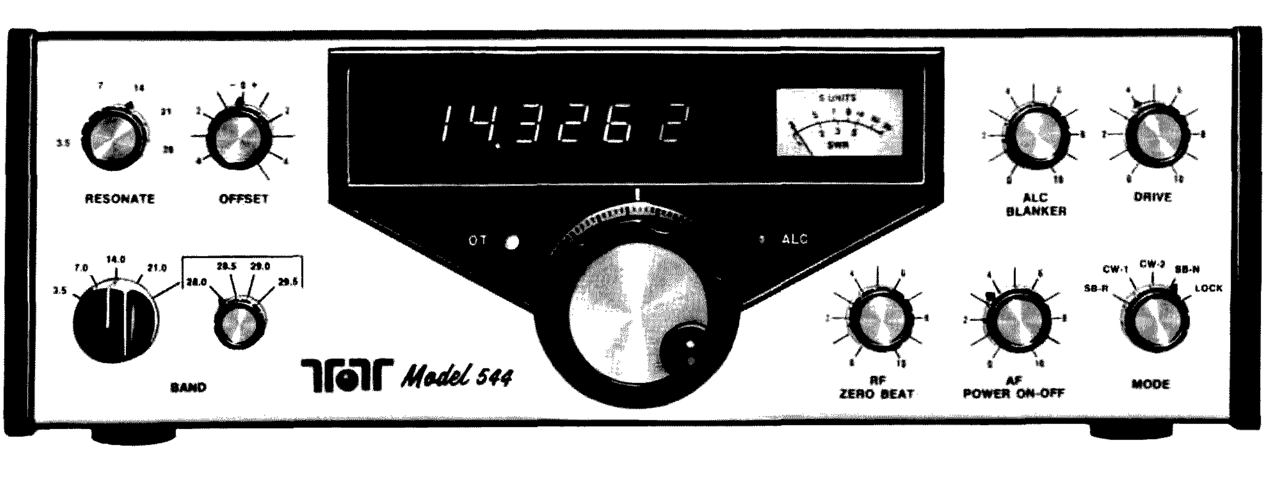

SD5 consists of a pound spool of the company's hermetically-sealed MIL-spec solder with the unique D5 desolder wick dispenser tool snapped into the core of the spool.

SD5 is a simple, practical solution to the problems of service people, technicians, and production-line workers who must often alternate between soldering and desoldering. Since the unit is completely refillable, it will generate consistent traffic in refill sales.

The ingenious design of the removable D5 desoldering tool allows it to retract or snap in or out of the solder spool for the convenience of the user. This feature is also especially beneficial to the distributor whose customers are already stocking Chemtronics solder, as the D5 tool is compatible with all pound and half-pound spools. The tool has a 2½" heat-resistant Teflon™ probe, permitting pinpoint wick application, even in densely-packed circuitry. This makes it marketable to those users involved in miniature devices who could never use desoldering wick before. The probe also facilitates "webbing" or shaping of the wick for greater solder absorption, another popular selling point.

All components of the SD5 system are available packaged for sale separately, as well as complete SD5 units. Solder is provided in 16, 18, and 21 gauge in the following alloys: 63/37 (eutectic), 60/40, 50/50, and 40/60. Wick, which is manufactured of the finest materials to exacting specifications, is available in two gauges, .06" and .10", to cover all desoldering requirements. Its pure copper color enables users to see the absorption of solder, so they never overheat boards and components by working with a used portion of braid. In addition, it is treated with a vacuum-applied, pure, non-activated flux for high efficiency without corrosive residue. Wick refills snap into the D5 tool as easily as the D5 tool snaps into the solder spool core, making the entire SD5 unit simple and economical to refill. Both Chemtronics solder and Chemtronics desoldering wick meet all applicable federal and MIL-specs.

Like all Chemtronics products, SD5 is sold exclusively through distributors, with no competition from direct factory sales. Details are available from Chemtronics representatives or directly from *Chemtronics, Inc., Solder Products Division, 45 Hoffman Avenue, Hauppauge, N.Y. 11787; (516)-582-3322; (212)-895-1930.*

RADIO SHACK VARIABLE DC SUPPLY

With the growing volume of equipment and accessory items requiring low-voltage, low-current power sources, one of the handiest things an amateur can have around the shack is a variable voltage power supply. Radio Shack's Micronta variable dc power supply is just the ticket for such applications. Whether it's a low power transceiver or transmitter, receiver, keyer, speech processor, a piece of test equipment, or anything else requiring a well-regulated power source within the range of 0-24 volts and up to 1 Amp, the Radio Shack supply will handle it.

The unit features a large, easy-to-read meter to let you monitor the output voltage or current, and a precision IC voltage regulator and silicon transistor assure maximum dependability and long life. Operating from a 120 V ac, 60 Hz power source, the supply provides an output voltage continuously variable from 0-24 V dc at up to 1 Amp, with automatic current limiting. Load regulation is less than 480 mV (±2%) change at the output terminals from 0 to 1 Amp at 24 V dc. Line regulation is less than 150 mV change at the output terminals at 24 V dc at 1 Amp with line variation from 105 to 135 V ac. Ripple is less than 25 mV at 24 V dc at 1 Amp.

The power supply is electrically protected so that any load over 1 Amp will cause the current to limit at approximately 1 Amp maximum, eliminating the need for any external fuses or circuit breakers to replace or reset. The unit has adequate internal heat sinking so that it will run continuously—even with a short circuit across its output terminals. However, care must be taken not to block any of the ventilation holes by laying something on top of the cabinet. If the voltage drops when a load is connected, it is an indication that the power supply has gone into "constant current limiting."

Both terminals of the power supply are floating with respect to ground, so you can electrically stack power supplies such as for a positive and negative supply. If two supplies are to be connected in parallel, a 1 Amp diode should be placed in series with the output of each supply to prevent the current from flowing back into the supply. The unit's three-way binding posts take wires, banana plugs, or dual banana plugs with 0.75 inch centers.

Attractively packaged in a 3-7/8" x 8-3/16" x 6-1/2" cabinet, the Radio Shack Micronta variable dc supply (catalog number 22-123) sells for $39.95 and is available at Radio Shack stores.

Morgan W. Godwin W4WFL
Peterborough NH

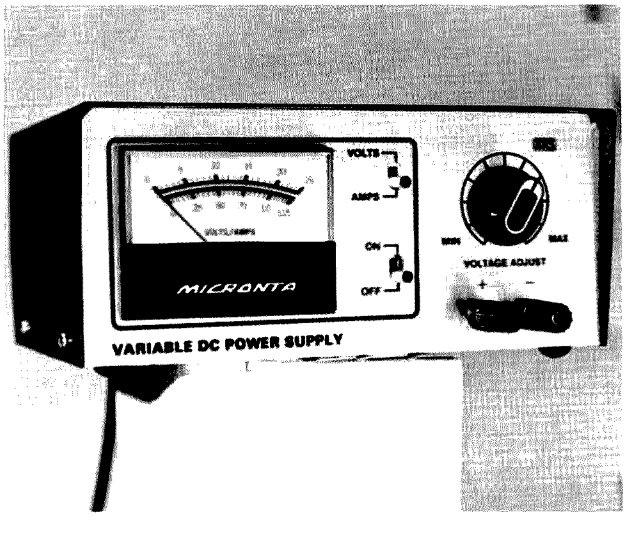

Radio Shack's Micronta variable dc power supply.

SCANBE PATENTS DIP SOCKET MODULE

A recently developed DIP socket module has been issued U.S. Patent No. 4,072,380, announced Bob Miller, president and general manager of Scanbe Division of Zero Corporation.

The unique DIP socket module, developed by Engineering Manager E. G. Freehauf, incorporates both a power and ground pin within the socket housing and is available through local Scanbe distributors.

Modules are also available with a built-in recessed cavity with exposed contacts for purposes of mounting a decoupling capacitor. Use of the socket module in medium production quantities is said to result in savings of up to 25 percent per position. The patented design concept not only saves on circuit-board real estate, but also eliminates need for separate decoupling capacitors and the cost of installing separate wrap posts for power and ground connections.

Two 16-pin models are currently available. The discrete socket model not only offers the advantage of the integral power and ground connections, but it also offers greater reliability and performance of the sort associated with the company's ME-2 series solderless wrap sockets. The socket module also offers all advantages of the ME-2 series socket, plus the added benefit of the integral decoupling capacitor. It may be purchased without capacitor if desired.

The Scanbe Division of Zero Corporation manufactures a complete line of standard and custom electronic packaging products, including circuit card files, socket panels, socket cards, and dual-inline sockets. *Scanbe Division of Zero Corporation, 3445 Fletcher Avenue, El Monte CA 91731; (213)-579-2300.*

HEATH HD-1984 MICROPHONE/AUTOPATCH ENCODER KIT

The Heath Company has improved upon its original Micoder kit. The new version features a touchtone™ encoder with a crystal standard and single chip circuit. The microphone has a response from 300 to 3000 Hz that is tailored for clean voice transmission. Assembly took only an hour and a half and no special equipment was needed for alignment. The only adjustments needed are to set the deviation of your transceiver to match the microphone's output and then to adjust the single pot on the PC board for the same deviation when using the touchtone pad.

The unit comes complete with a six-foot coiled microphone cable and hanger clip. Power is obtained from a standard 9-volt battery (not supplied); Heath claims battery life to be approximately six months with normal use. The HD-1984 should be very popular with mobile operators since it is so quick and convenient to use—you can hold the microphone at the steering wheel and work the encoder while keeping an eye on the road.

The HD-1984 measures 3-3/4" x 2-5/8" x 1-3/4" and weighs in at just 9 ounces (including battery). The kit price is $39.95. *Heath Company, Benton Harbor MI 49022.*

Morgan W. Godwin W4WFL
Peterborough NH

Enjoy All Five Bands

—with this novice no-trap antenna

Karl T. Thurber W8FX/4
233 Newcastle Lane
Montgomery AL 36117

If there is a fundamental rule about getting the most from your radio equipment, regardless of the size of your pocketbook, it is this: *Don't skimp on your antenna.*

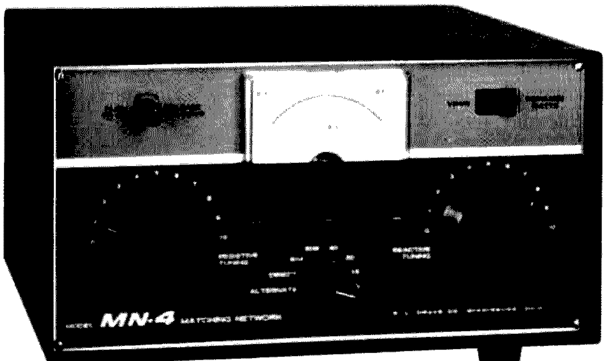

This antenna tuner, or matching network, is representative of current designs, incorporating a built-in wattmeter which allows accurate and continuous power measurement and swr indication. Rated at 200 Watts rf power-handling capability, this tuner enables feedline swrs of 5:1 to be matched to the transmitter, being designed primarily for coax-to-coax matching. Other wider-range tuners enable loading of balanced-line (twinlead) or single-wire antennas to the low-impedance coax output of modern transmitters and transceivers. An antenna coupler should always be used in conjunction with multiband antennas for good harmonic suppression. (Photo courtesy of R. L. Drake Co.)

For top-notch DX work, a well-designed and properly installed skyhook is nearly as important as the transmitter or transceiver itself. You simply can't get maximum efficiency and radiated power output using a poor antenna system. Particularly with the relatively low power limitation of 250 Watts placed on the Novice, a good antenna is the best hope for the newcomer to work his fair share of DX.

Many hams (and not just beginners) run into problems in erecting just one antenna, so the thought of constructing antennas for each of the five HF bands seems ridiculous, not to mention the effect on your neighbors. But, with about 66 feet of antenna space, you can erect a single five-band (80/75, 40, 20, 15, and 10 meter) antenna — one that uses a separate dipole for each band and which uses no traps.

First, before describing this antenna in detail, let's take a look at some common single and multiband antennas that are often suggested for the Novice and beginner, noting the advantages and disadvantages of each.

Old Faithful: The Half-Wave Dipole

You can cut a separate antenna for each band you want to work, although a 40 meter dipole will also work fairly well on 15 meters (due to an "odd half-wave harmonic" relationship existing between the 7 and 21 MHz dipoles). This is the only case where a dipole cut for one band will also work on another. Normally, trying to use a half-wave dipole on another band results in mismatches, high swr, increased possibility of BCI and TVI, and other problems, the least of which is poor efficiency.

The half-wave dipole shown in Fig. 1 is normally run in a straight line and centerfed with 75-Ohm coaxial cable or even 75-Ohm twinlead (though the latter appears to be going out of favor because it radiates and is harder to handle). The total length of the antenna is calculated by dividing the desired center

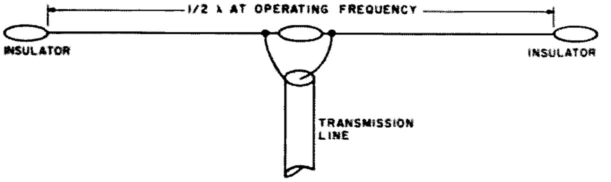

Unquestionably the world's most popular and most commonly used antenna, it is probably next to the single-wire in simplicity. However, its use is normally limited to the band for which it is designed. An exception to this is that an antenna resonant in the 40 meter band will also operate with a low swr (standing wave ratio) on 15 meters, three times the basic operating frequency.

The half-wave dipole offers a good match to 75-Ohm coaxial cable or transmitting type twinlead. At the fundamental design frequency, the swr should be under 2:1 over a range of plus or minus 2 percent of resonance.

The dipole is basically a balanced antenna, both sides being symmetrical in nature. For this reason, a balun (or "balanced-to-unbalanced") transformer coil is often used to feed the dipole with coax, which is inherently an unbalanced cable (center conductor plus grounded outer shield).

The five-band antenna described in this article is a variation of the basic half-wave dipole. Other versions of the dipole are possible, such as the folded dipole, designed to directly match 300-Ohm feedlines. Again, the folded dipole is also a single-band affair.

Multiband operation is also possible using so-called "tuned feeders" (open-wire or twinlead transmission lines), coupling the transmitter to the antenna through a wide-range coupler or matching network. The flattop is usually cut to the lowest operating frequency to be used and transmission line lengths selected to give the least problems with the high line swr and antenna currents flowing on the line.

Fig. 1. Basic half-wavelength dipole antenna.

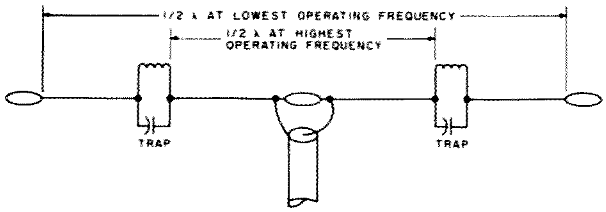

The trap antenna operates on two or more bands with practically the same efficiency as if a separate antenna was constructed for each band. In the two-band trap antenna shown, each parallel-resonant trap consists of a capacitor and coil placed at the ends of the shorter dipole section. The traps completely isolate the rest of the antenna (including other traps for other bands) from this section, thereby acting as insulators for rf energy at their design frequency. At lower frequencies, however, they will pass rf with little effect.

The same principle follows on up to the lowest frequency band on which the multiband trap antenna is designed to operate. The lowest frequency band doesn't require a set of traps, of course — it's simply the entire length of flattop end to end. A 160 through 6 meter trap antenna, for example, would require six traps on each side, for a total of twelve, to allow 7-band operation.

Note that, when traps are installed, there is some shortening of the antenna, due to the inductive loading effect of each trap. For example, the typical half-wavelength 75 meter dipole section would only have to be about 100 feet long because of the effects of the traps. The exact degree of shortening depends on the ratio of inductance to capacity in the traps; the more the capacity in the traps relative to the inductance, the closer the antenna will be to standard formula length.

Like the basic dipole, the trap is a balanced-type antenna and may be fed by coax through a balun transformer.

Fig. 2. Simple trap antenna configuration.

operation frequency in megahertz (MHz) into 468. Therefore, a dipole for the Novice segment of 40 meters (7.10 to 7.15 MHz) would be about 65′ 8″ long. But an 80 meter CW dipole cut for the low end of the band would be all of 133′ 8″, a length not all suburban lots can easily accommodate, even using the so-called inverted vee configuration where the center insulator is mounted at a fairly high point and the ends of the antenna are brought down close to the ground.

In practice, the center impedance of the half-wave antenna varies slightly with the antenna's height above the ground, wire diameter, proximity to other objects such as trees and buildings, etc. But it is safe to assume a close impedance match to 70- or 75-Ohm coax or twinlead; you can use 50-Ohm coax with only a slight swr increase. Furthermore, most recent transmitters and transceivers are specifically designed to work into 50- to 75-Ohm transmission lines, so tuning or matching is usually no problem with this kind of one-band, one-antenna setup. (You might be interested to know that RG-11/U and RG-8/U coax have about a 6% loss per 100 feet on 75 meters, while the smaller RG-59/U and RG-58/U cables have a loss of about 11%. Foam-type coax has less loss, while 73-Ohm balanced twinlead has about an 8% loss. Those losses tend to increase at higher frequencies and with impedance mismatches.)

Although the basic half-wave dipole, being very straightforward in design and not relying on any gimmicks, gives the least trouble of any antenna, a separate antenna must be constructed for each band (except 15 meters). And that's not usually possible in most urban and suburban locations.

A Fair Compromise: The Trap Dipole

The "trap" antenna is a good choice for the operator who has the space for one full-sized dipole and wants multiband operating capability. It is similar to a regular wire dipole but has tuned traps that electrically isolate part of the antenna length. In a simple two-band example, if the antenna length from trap to trap in Fig. 2 is cut for 20 meters, then, from end to end, the same antenna can cover the 75 meter band as well, if its full length is a half wavelength on that band.

Two traps are needed for each band, one on each side of the feedline connection, except for the lowest band. They are parallel-tuned circuits enclosed in a waterproof casing, designed to resonate at the center frequency of the band. At their resonant frequency, they represent a high impedance to rf (thereby effectively acting as insulators), so the portion of the antenna beyond the traps will be out of the circuit, electrically speaking. As the traps are difficult to construct and properly adjust (not to mention making them waterproof), they're best purchased commercially. They are not terribly expensive. About a dozen manufacturers make amateur band traps. Most can be obtained complete with precut flattop, though just the traps alone are available for anyone who prefers to construct his own antenna.

The main advantage of the trap dipole over other multiband antennas is that a single antenna length will do for several bands. However, as is the case with all multiband antennas, the trap introduces a problem in harmonic radiation. If, for example, a transmitter is operating in the 80 meter Novice band, the second harmonic of the

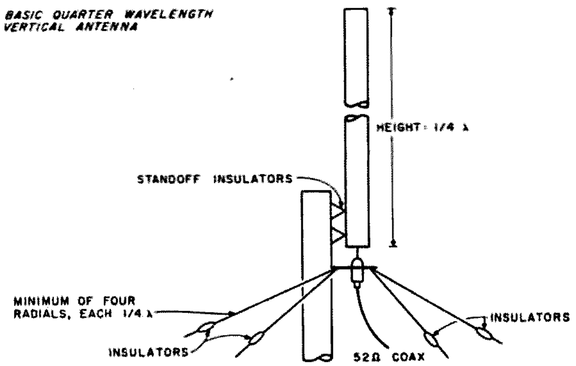

The quarter-wavelength antenna shown above is frequently used on the HF bands to put out a signal with a low radiation angle, especially good for DX work. It's also a good choice when there is insufficient room to support full half-wave flattops at the desired operating frequency.

A vertical antenna may be fed as a so-called "ground plane" as shown above, with at least four wires, each a quarter wavelength, extending radially from the base. The radials form an "artificial" metallic ground, allowing good low-angle radiation regardless of height above the ground. The vertical can also be fed directly against ground, eliminating the above-ground radials, as long as the antenna has a good low-resistance ground connection in the form of at least a half-dozen buried radials and several ground rods installed at the base.

At HF frequencies, the physical lengths required usually limit the vertical height to a maximum of a quarter wavelength at the operating frequency, whereas the smaller dimensions at VHF frequencies allow lengthening the antenna for some gain; 5/8-wavelength and even 3 half-wavelength in-phase configurations are common, giving several dB of effective gain over the basic quarter-wavelength antenna.

The vertical, like the dipole, is essentially a single-band affair, although traps may be inserted at appropriate points for multiband use.

Fig. 3. Vertical ground-plane antenna.

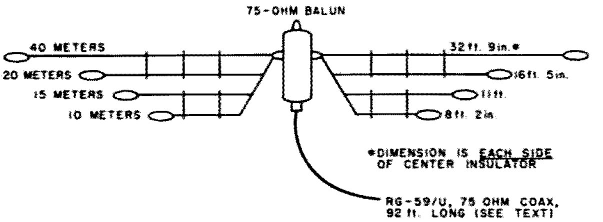

The antenna system pictured above is an adaptation of the basic dipole antenna; a group of centerfed dipoles are connected in parallel where the transmission line joins them.

On 40, 20, 15, and 10 meters, the antennas act as ordinary dipoles. There is fairly little interaction between the separate flattops. On 75 and 80 meters, the antenna is fed through the shorted ends of the coax (see text) as a single-wire-type antenna.

As the antenna, like the basic dipole, is essentially a balanced system, a balanced feedline would normally be used, such as 75-Ohm transmitting-type twinlead. However, direct coax feed will present little in the way of problems, or the balun transformer can be used as shown in the illustration to prevent possible imbalances in the system introduced by using the unbalanced coaxial cable.

As described in the text, the antenna itself is constructed of 450-Ohm open-wire TV transmission line, although other variations are suggested, such as the use of 300-Ohm twinlead or "ladder line."

Note that, in the configuration shown above, the 20 and 10 meter dipoles are the cutaway lower halves of the 40 and 15 meter dipoles, respectively. Each set of dipoles should be separately supported on the ends to minimize strain on the open wire line.

The physical design is flexible and may be varied to suit individual operating needs and available space, as suggested in the article.

Fig. 5 shows how the coax is jumpered at the transmitter end for 75 and 80 meter operation, while Fig. 6 shows details of the center insulator mechanical support connections.

Fig. 4. Short five-band no-trap antenna.

signal will also be radiated very nicely by the antenna — but it will be out of the top end of the 40 meter band, representing illegal operation and inviting a so-called "pink ticket" from the FCC.

Usually, you can stay out of trouble with multiband antennas by always feeding the antenna through an antenna coupler, which can offer an added 20 to 30 dB or more of harmonic suppression.

The problem of increased harmonic radiation and TVI applies also to the five-band antenna which will be described later on. It, too, should be fed through an antenna coupler, although most transmitter pi-network output circuits have fairly good second and third harmonic rejection characteristics if not "loaded" too heavily in an effort to get out that last Watt of rf. (If you suspect excessive harmonic radiation, check with a friend a few miles away, having him tune to your second or third harmonic — it should be received very weakly, if at all. It's a fairly good test for harmonic radiation, provided he's at least a few miles away.)

Using a multiband antenna may also aggravate TVI problems. So be sure to use a low-pass TVI filter installed in the coax between the transmitter and the antenna tuner and use the minimum grid drive necessary for full power output.

DXer's Choice: The Ground Plane

The ground-plane vertical is an excellent choice when horizontal space is a problem and if you're mainly interested in working DX. This type of antenna has a very low radiation angle, can be either ground- or mast-mounted, and can be directly fed with coaxial cable. It is shown in Fig. 3.

The quarter-wave vertical radiator must be insulated from ground for coax feed, presenting a feedpoint impedance of around 25 to 40 Ohms. This allows a reasonable match to 52-Ohm coax without using matching stubs or other devices in the transmission line. The antenna can also be fed with 70- or 75-Ohm coaxial line using a quarter-wavelength section of 50-Ohm coax between the line and antenna.

The vertical can be fed "against ground" rather than using the ground-plane radials running above ground (a little inconvenient on 80 and 40 meters because of their length). In this case, care is taken to get a good ground "mirror" by using several six- to eight-foot ground rods and using at least a half-dozen buried radials of various lengths to obtain the ground-plane effect and a low rf ground resistance.

While it's a particularly good DX antenna, the vertical sometimes doesn't work as well at the medium distances typically worked on 75 and 40 meters. Also, installing the radial system often presents a problem. Then, too, the ground-plane vertical is normally a one-band affair that also has a nasty tendency to aggravate TVI and RFI problems because of its vertical polarization and consequent low angle of radiation, which tends to direct your signal down and into the neighbors' TV, stereo,

and other electronic equipment.

A hybrid-type antenna that is becoming increasingly popular is the trap vertical, which uses tuned traps much like those used in the trap dipole, but which are inserted into the vertical antenna elements at the proper isolation points to allow multiband operation.

The multiband trap vertical — some designs are as short as 30 feet or less for full 80-10 meter operation — is an excellent all-around antenna and a fine DX choice when worked against a good ground system, but it is a lot more expensive than the simple wire flattop. Also, due to the complicated mechanical problems introduced by the traps, it's usually not practical to build your own trap vertical from scratch, whereas single-band verticals and dipoles are "snaps" for ease of construction.

Another popular and inexpensive multiband vertical is base-loaded, the antenna usually being 20-35 feet long and in one continuous length. With this antenna, a tap on the base-loading coil is manually moved to different positions on the coil until a good coax match is obtained. While 80 through 10 meters can be worked using one antenna and coil combination, the tap must be changed manually, a distinct disadvantage in inclement weather. The coil must also be waterproofed and otherwise protected from the elements.

A Short Multiband Antenna Using No Traps

As shown in Fig. 4, this antenna is a complete, easy-to-build, coax-fed, five-band, separate-dipole system. As with the basic half-wave dipole antennas discussed earlier, the dipoles are individually cut to any desired frequency within a particular band using the familiar dipole equation $L = 468/F$, where L is in feet and F in MHz. For general all-around operation, each dipole should be resonant in the center of its band. (On 10 meters, however, the antenna is cut for 28.5 MHz to cover the CW segment and the lower end of the phone band starting at 28.5 MHz.)

With this setup, on the band you're working, the transmitter and coax feedline "see" a good 75-Ohm match; the other paralleled dipoles — having a high impedance on other than the band they're designed for — just aren't there, electrically speaking, so they don't much affect operation on the other bands.

You'll find that, on 40, 20, and 15 meters, the antenna maintains a fairly consistent swr of less than 2:1. On the 10 meter band, the "bandwidth" of the antenna is roughly 500 kHz either side of the design center frequency (28.5 MHz) before the swr starts to become excessive. On ten, however, if a wide-range antenna tuner is used, the antenna may be made to load fairly well over the entire band.

Using paralleled dipoles with one common feedline is a very common practice, but the fact is that it still takes about 125' of flattop to radiate effectively on 80 meters. Even using commercially-designed trap dipoles, the length needed for 80 is usually at least 100 feet, with a very narrow operating frequency range due to the high "Q" of the traps. Again, this kind of space often is not available.

Here's how to get to 75 and 80 meters with this antenna: First, recall that the basic antenna length at 7.15 MHz is determined from the formula of 468/F, or 65' 6". Dividing this by two gives us the 32' 9" length on each side of the center insulator. Now, adding a length of coax of about 92 feet to the 32' 9" gives an effective antenna length of 124" 9", which represents a half wavelength resonant at the approximate center of the 75/80 meter band.

On 75 and 80, you should find that the swr is fairly low for about 150 to 200 kHz around the design frequency and shouldn't exceed 3:1 or so at these limits. But on this band — and this band only — the inner and outer conductors of the coaxial cable are connected together at the transmitter or antenna tuner end and fed like a single-wire antenna. (Note that a good ground connection for the transmitter or transceiver is important for good results when the antenna is, in effect, fed as a single wire against

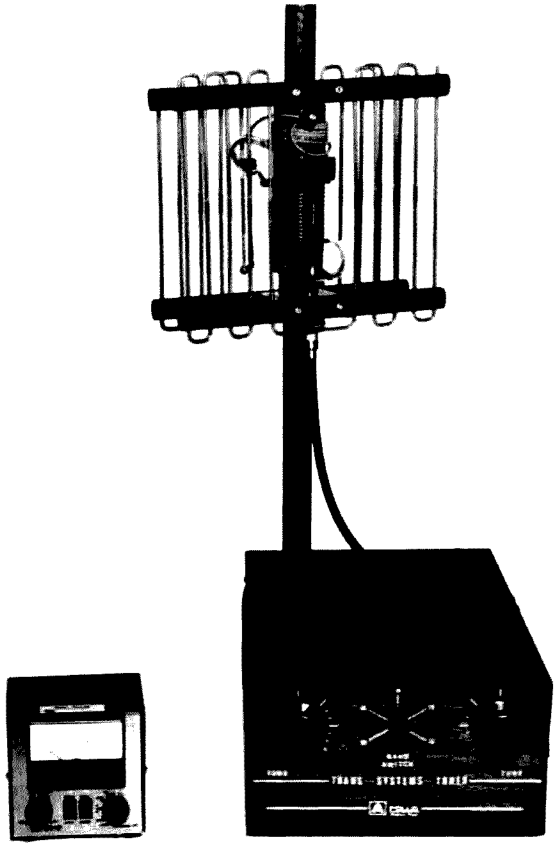

One of the few antenna tuner kits on the market today, the 5-band Apollo Trans System tuner kit is a wide-range coupler based on the classic design by Lew McCoy which appeared several years ago in QST. The tuner will match low-impedance coax cable or open-wire lines. It will also handle random-wire antennas. The kit sells for about $125. Also shown here is a combination wattmeter and direct-reading standing wave ratio bridge, a useful device in tuning up and adjusting any antenna. The device behind the antenna coupler is the Apollo "Little Giant" beam antenna, a very unusually-configured mini-antenna designed for single-band operation on 40, 20, 15, or 10 meters. It measures just 27" high and 22" wide. A slightly larger version is designed for 80 meter operation. (Photo courtesy of Apollo Products, Box 245, Vaughnsville OH 45893.)

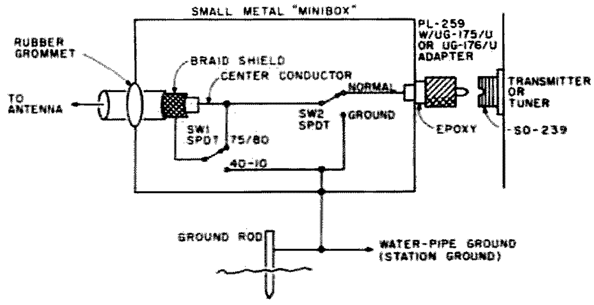

This device allows convenient switching from a 75/80 meter single-wire configuration to straight multiple-dipole operation.

SW1, in the upper position, shorts the coax shield to the inner conductor for 75 and and 80 meter operation, while, in the lower position, it is connected to ground in regular fashion. (Note that the coax is not grounded to the metal box where it enters but, rather, is routed through a rubber grommet.)

SW2, when in the normal position, connects the antenna system to the transmitter or antenna tuner for regular operation. In the ground position, the antenna is grounded for lightning protection. The antenna should always be grounded when not in use for maximum protection.

The PL-259 connector is mounted to the minibox by drilling a hole just large enough to accommodate a UG-175/U or UG-176/U reducer adapter, screwing the reducer onto the PL-259 through the cabinet wall. It can be epoxied into place if desired.

The two SPDT switches can be ordinary electrical switches for low-power work. However, heavy-duty ceramic rotary switches are suggested for more than 100 Watts or so power levels.

The jumper box should be connected to a good ground system. This is particularly important when working the antenna as a single-wire on the lowest band.

Fig. 5. 75/80 meter jumper box pictorial diagram.

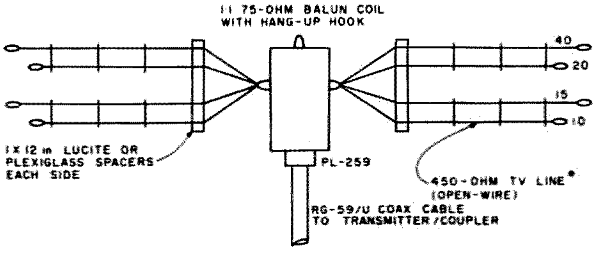

A commercially-manufactured 1:1 balun is used as a convenient center insulator for the antenna; the hang-up hook may be used if you want to tilt the antenna for space into the inverted vee arrangement mentioned in the text.

The 450-Ohm open-wire line may be run directly to the balun, but a neater and stronger antenna results if you run the dipole sets to a 1" × 12" Lucite™ or Plexiglas™ bar, firmly anchoring the line ends to the bar. Short (6-8") wires may be run from the bar to the anchoring hooks on either side of the balun coil. Note that all wires on each side of the balun are connected to each other, resulting in each dipole being electrically paralleled with the others.

For maximum strength, each dipole set should be separately supported, minimizing strain on the antenna as a whole. Most baluns are equipped with a coax receptacle; therefore, the cable should be fitted with a PL-259 connector for easy connection to the antenna.

As discussed in the text, 300-Ohm heavy-duty twinlead may also be used to construct the antenna, as may polyethylene "ladder line." Solid copper wire may also be used to form the 40 meter antenna with the other dipoles being suspended from it. The ARRL Antenna Book gives a number of mechanical techniques for multiple-diode center support and may be consulted for more information.

If you prefer, the balun coil may be eliminated and replaced with a standard center insulator with little effect on performance.

*Fig. 6. Center insulator mechanical support connections for 5-band antenna. *Burstein-Applebee catalogue no. 2A9967-9.*

ground.)

The jumpering can be done manually using alligator clips, or you can construct a jumper box for the purpose, as shown in Fig. 5. The box also provides for grounding the antenna when not in use, for lightning protection, and for discharge of static buildup on the antenna.

Since the antenna operates with a fairly low swr, even on 75 and 80, the transmission line could be fed directly by the pi-network output circuit of the transmitter or transceiver without using an external antenna tuner or coupler. But, an antenna tuner or coupler should in fact be used to reduce the very real possibility of radiating out-of-band harmonics — something a multiband antenna will do very well, as mentioned previously. The tuner also does a nice job tuning out any reactance at the band edges, which is particularly useful on both 75/80 and 10 meters where swr may get a bit ragged at the band edges.

On the top four bands, the radiation pattern will closely resemble the familiar "broadside" half-wave dipole pattern, while on 75 and 80 meters, the pattern is essentially omnidirectional with elements of both vertical and horizontal polarization caused by the radiating coax which is now an integral part of the antenna. If your space is even more limited, you can mount the antenna in inverted vee fashion, which requires only a single high support and less horizontal space. By doing this, you very slightly reduce the antenna's resonant frequency, feedpoint impedance, and bandwidths, as the angle between the two parts of the dipole is decreased. As long as you don't make the angle at the apex smaller than about 90 degrees, you should have no problems using the vee, and the slightly lowered angle of radiation should be a plus for DX work.

Build It

The five-band antenna is made of good-quality TV-

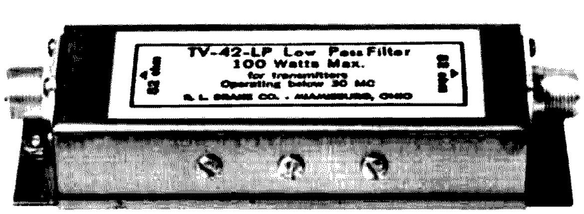

This low-pass filter provides extremely high attenuation of signals higher than 43 MHz, effectively eliminating the possbility of radiating undesirable harmonics in the TV bands through the antenna. Multiband antennas tend to aggravate harmonic radiation problems, including TVI, but the use of a low-pass filter and antenna coupler in the transmission line will do a great deal to reduce the possibility of TVI problems. While the particular Drake filter shown is rated at only 100 Watts, other filters by Drake and a number of other manufacturers will handle all amateur power levels. (Photo courtesy of R. L. Drake Co.)

type 450-Ohm open-wire transmission line, heavy-duty 300-Ohm twinlead, or commercially-available polyethylene "ladder line" sold by many large mail-order electronic suppliers, such as Burstein-Applebee, Lafayette Radio, and others. In most situations, the open-wire line or twinlead is strong enough to support the antenna, if the lower dipoles are run separately to a support and if the coax is also supported at some point so the full weight of its entire length doesn't fall on the antenna flattop. (You can also use #12 or #14 copper wire for the main 40 meter flattop if you like — I'll discuss that variation later on.)

Each end of the 40 and 15 meter dipoles (the top halves of the open-wire) is connected to an insulator, with the centers being tied through a Lucite™ or Plexglas™ support bar to the main center insulator. The 15 meter dipole should be separately supported on the ends and run to a nearby tree or any available mast or pole. The 20 and 10 meter dipoles are simply the cutaway lower portions of the 40 and 15 meter open-wire line or twinlead. The center of each dipole is connected in parallel with the one above it at the center insulator. Fig. 6 is a close-up view showing how all this is done.

When hanging the antenna, you should place it as high as you possibly can above the ground (at least 25 to 30 feet) and far away from other objects that might detune it or block its radiation path. You can orient it for the direction you're mainly interested in covering, but it will still radiate fairly well in all directions. Maximum radiation will be in a "doughnut pattern" lying at right angles to the wire.*

Getting down to the nitty-gritty of actually constructing the antenna, your best bet is to use a commercial 1:1, 75-Ohm balun coil as the center insulator. While a balun isn't absolutely necessary, it's helpful in getting a symmetrical radiation pattern and keeping down antenna currents on the coax (except on 75 and 80, where the coax is part of the antenna itself). If you want to use a balun — and it is a good idea to do so — they are hard to build and waterproof yourself, so it's probably best to buy a commercial model, costing anywhere from $10 to $20. Unadilla Radiation, Green Insulator, Kaufman Industries, Barker and Williamson, Palomar Engineers, and a host of others make them. Their ads can be found each month in the various amateur publications.

They're all good products. Two added pluses for the baluns are that, first, they usually come equipped with a built-in SO-239-type coax connector for easy feedline attachment, and second, their internal construction usually places the antenna at dc ground potential, affording some degree of built-in lightning protection for the antenna. Just make sure that you use the one-to-one (1:1) kind of balun, not the 4:1 type, which is designed to transform a 300-Ohm folded dipole's impedance to match standard 75-Ohm coax.

Whether or not the inherently balanced dipole should always be fed through a balun is a moot technical point that is likely never to be decided with any finality. I have never found it absolutely necessary to use one, though you will find that many antenna purists insist that baluns are necessary to keep current from flowing on the outside of the coax transmission line. (Some operators prefer to use balanced 75-Ohm twinlead and mount the balun at the transmitter end — take your pick.)

While on the subject of baluns and dipole center connectors, some balun manufacturers also sell the connectors less the balun "innards." These connectors are very handy even if you don't want the balun feature, making it easier to build a professional-looking antenna with a good weatherproof feedpoint connection. They're well worth the cost — usually less than $9 or $10 — and are a lot less hassle than building your own center connectors. Of course, since they are weatherproof, they can be reclaimed and used again and again with future antennas.

To complete the installa-

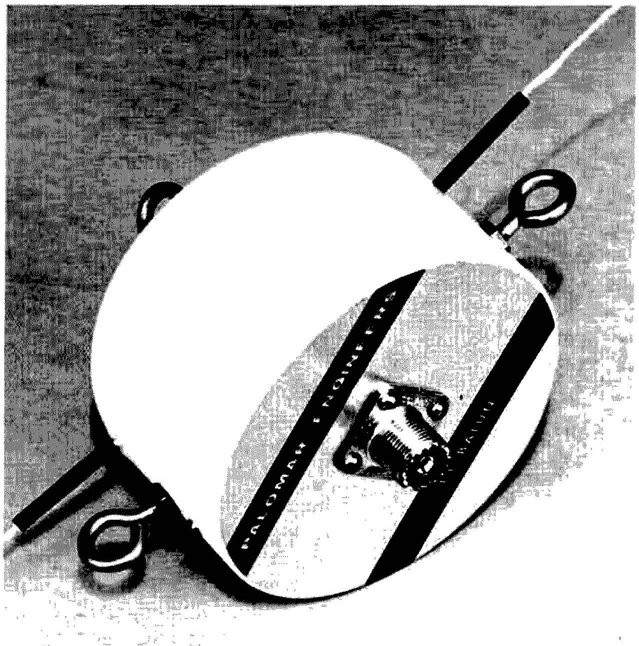

This Palomar balun is designed to match unbalanced coaxial line to balanced dipole antennas over the range of 1.7 to 30 MHz. According to the manufacturer, dipoles fed directly with coax cable are susceptible to cable radiation which can lead to TVI, BCI, rf feedback in the station, and noise pickup when receiving. The balun (balanced-to-unbalanced transformer) converts from the essential unbalanced coax to a balanced output by transformer action. Note the "hang-up" hook" useful in supporting inverted-vee-type antennas. Baluns are made by numerous manufacturers, such as Unadilla Radiation, Kaufman Industries, Greene Insulator, and others. (Photo courtesy of Palomar Engineers)

*Note: A centerfed, horizontal half-wave dipole radiates in a fairly wide pattern broadside to its length and poorest off the ends of the wire. However, from a practical standpoint, it's really not that important in what direction you run a dipole, especially on 80 or 40 meters, although orienting its ends in a north-south direction is a pretty fair compromise for stateside contacts. On the 20, 15, and 10 meter bands, directivity is somewhat more pronounced, so, if DX is your forte, you might want to route it with this in mind. In any case, don't be overly concerned about its orientation.

1. Keep horizontal antennas as high as possible — at least 25 or 30 feet above the ground or buildings.
2. Bend the dipole into a vee if you like, but avoid bending the ends if at all possible. Don't be overly concerned with the antenna's orientation.
3. Feed horizontal flattops at the center rather than at the ends; balun matching coils are nice, but are not absolutely necessary.
4. Use high-quality coax feedline; its advantages far outweigh its disadvantages. Small-diameter coax is okay up to about 500 Watts.
5. Vertical antennas are good, provided they are worked against a good ground system. But they tend to be noisy on receiving and may aggravate TVI and BCI.
6. Protect your antenna against lightning and ground it whenever you're not using it. You may be very sorry if you don't!
7. Use an swr meter or R-X antenna bridge to check out and adjust your antenna, but don't get hung up on swr. It can't always work out to 1:1.
8. Install a good station ground using connections to cold-water pipes and/or ground rods driven into the earth. (This goes hand in hand with lightning protection.)
9. Use an antenna coupler or matching network in the coax line if for no other reason than getting added harmonic suppression. The ones with built-in swr bridges and rf power meters are very handy and allow continous monitoring.
10. Use a low-pass filter between the transmitter or transceiver and the antenna coupler — don't give harmonic-caused TVI a chance!
11. Multiband trap antennas are fine, but can be frustrating to adjust if you've never "pruned" an antenna before. Be prepared to do some tweaking to get consistent performance from band to band.
12. Beams, rhombics, and other advanced antennas will add punch to your signal, but cut your teeth on some basic types first.
13. If your antenna doesn't work properly, check for continuity and look for shorts in the line; also check the swr carefully. Double check all solder joints and make sure all connections are mechanically sound. Above all, don't try to force power into an antenna that doesn't want to load up — find out what the problem is before ruining a final output tube or messing up your final tank circuit.

Table 1. Antenna installation tips for the beginner. Summarized here are a baker's dozen rules of thumb that should help you in getting the maximum results from that HF skyhook. Take heed! While not everyone would agree with all the items of my "laundry list," they do represent some 20-plus years of observations in experimenting with a wide range of antennas, from short indoor single-wires to multi-element beams.

tion, you can connect the ends of the dipole to good-quality ceramic, glass, or porcelain insulators and support the ends with weatherproof rope, heavy-duty plastic clothesline, or wire (broken up with strain insulators at random intervals to prevent undesired resonances near the antenna which may affect its performance or swr). Also, don't pull the antenna too tight; leave just enough sag to keep it flexible in the wind. In very limited space, you can hang the center of the antenna on any available high support (preferably nonmetallic) and let the ends droop in inverted vee style. You can also run the center portion of the antenna horizontally between two closely-spaced supports, bending the ends and hanging them vertically. (I don't recommend the latter with this antenna unless absolutely necessary, as it will result in a reduction in efficiency and is a bit tricky if open-wire is used to make up the dipoles. But supporting the center is a good idea, especially if you use open-wire line for the main 40 meter section, which has to bear a good deal of weight.)

The coax transmission line is best kept away from trees, power lines, and buildings, particularly since, on 75 and 80 meters, it is being fed as a resonant or tuned line. It should be run outdoors as much as possible, at right angles to the dipoles, if possible, to minimize undue distortion of the radiation pattern by the coax. Use TV-type standoff insulators in routing the coax to the shack.

Incidentally, RG-59/U coax is suitable for up to 500 or 600 Watts input if the swr is low, while you should use RG-11/U if you're running more power than that. Be wary of using cheap CB-type coax, as the shielding tends to be poor. The cable also tends to become very lossy at the higher frequencies.

The dipoles will interact with one another to a very small extent. If you experience problems in keeping the swr fairly consistent from one band to another, you can try pruning the antenna slightly for each band using a grid-dip meter, R-X antenna bridge, or swr meter. You can also experiment by adding about 4 feet of 75-Ohm coax to the specified 92-foot length and then trimming off about 4" of coax at a time, until the swr becomes fairly consistent from band to band. The extra length of coax won't adversely affect 75 and 80 meter operation, but it will shift the resonant frequency somewhat lower than originally designed.

Do your initial antenna tune-up without the coupler or tuner being in the line, so that you'll be sure that you're measuring the antenna's characteristics, not the coupler's ability. After you have attained an acceptable swr on all bands, move the swr bridge to between the coupler and the transmitter for routine tune-up and band changing.

One point before leaving the subject of tuning: Tweak the antenna all you like, but, if it works well on all bands and shows a reasonable swr on your favorite band segments, leave it alone. Tuning any multiband antenna for a perfect 1:1 match on all bands is almost impossible and probably won't make much difference in overall performance anyway. Actually, from a practical standpoint, an swr of even 4 or 5 to 1 doesn't cause a great signal loss or necessarily cause loading problems at the transmitter. This would start to matter at 6 and 2 meters with a long feedline, but, as a rule, if the power is going into the line, the antenna has to get most of it. Spending a lot of time trying to get the swr down to exactly 1:1 at all points in the band just won't help your signal that much.

Don't Be Afraid To Experiment

The antenna should work well as designed, but by no means must it be constructed exactly as described. After all, a good deal of the fun in amateur radio is experimenting to determine what works best for your own purposes.

For example, you may want to use a nonbalun center insulator instead of the balun coil. Or, you may, for added strength, want to use #12 or #14 copperweld steel wire for the 40 meter section, using the open-wire line or twinlead for the 20 and 10 meter dipoles and skipping the 15 meter section entirely, since the 40 meter antenna will do a fairly good job on 15. Many variations are possible. Refer to the *Radio Amateur's Handbook,* the *ARRL Antenna Book,* or the book *73 Dipole and Long-Wire Antennas* for more ideas on multiband antenna configurations.

You may even elect to forget the 75/80 feature, if that band isn't important to you. In that case, the lowest band you have to

consider is 40 meters, so the length of the coax is unimportant, since it operates as an untuned line on all bands covered.

Then, too, each dipole's length can be set to favor a particular portion of the band. For instance, you might want to cut them for the CW portions of 40 and 20, but make them resonant in the middle of the 15 and 10 meter phone bands instead, depending on your interests and the operating privileges your class of license conveys.

Bear in mind that, if you want to carefully tune the antenna for a particular band segment, it's best to start with lengths several inches longer than calculated from the dipole formula to give yourself a little play when pruning the antenna. Also, if the 92 feet of coax specified seems a bit long, there's nothing magic in the length. It was chosen to make up a half wavelength on 75 and 80 when combined with each leg of the antenna for ease in loading. You can experiment with shorter lengths. With other lengths of coax, however, on 75 and 80 the antenna may behave more like a random wire, and a wide-range antenna coupler may have to be used to tune out the large amounts of reactance you can expect.

In any case, make all measurements carefully and be sure to solder all joints properly. A cold solder joint can wreak all kinds of havoc, with intermittent operation, TVI, and RFI very likely results.

This is a simple antenna, but one not involving too many performance-robbing compromises. And, you will very likely find that, in general, the simpler the antenna, the better the results and the fewer operating problems you're going to have. ■

Allan S. Joffe W3KBM
1005 Twining Road
Dresher PA 19025

Reincarnating Old Test Equipment

—a 1942 capacitance meter is born again

Photos by WA3PTC

My Cornell-Dubilier capacitance bridge had served long and well. Purchased in 1942, the model BN cost about $12.00. Eighteen years later, the 12A7 failed and was replaced. In 1972, a resistor failed, and then, in May, 1977, the "new" 12A7 failed. Obviously such an unreliable piece of gear was begging for replacement ... until the price of an equivalent unit revealed the true extent of inflation.

Examination of the problem called for recycling, something we hams had been doing for years before the idea caught on in the popular press. The only item needed to bring the unit back to life was a bridge balance amplifier and an indicator of balance. I had always been less than thrilled with the magic eye indicator, as it had to be shaded from ambient light to really see when balance was achieved.

In my case, I decided on a new housing, since the old one had been cracked while proving that gravity was still a viable force. The cabinet from an old five-inch Sony TV was mated to a panel made out of a formica cutoff from a woodworking project. Fig. 1 shows the original schematic.

Electrically (as shown in Fig. 2), all parts associated with the old bridge amplifier and magic eye indicator were discarded, keeping the basic bridge components intact. The voltage divider, consisting of a ten-megohm resistor and a one-megohm resistor (across the output of the bridge), serves two purposes — first, to keep the impedance high at this point to allow the bridge to function, and second, to control the amplitude of the input to the op amp used as a bridge amplifier.

The output of the bridge when unbalanced can run as high as thirty volts, and at balance, depending on the range in use, can be as low as a few tenths of a volt. The divider reduces this variation of amplitudes by a factor of eleven to avoid real problems with the op amp, which is set up for a gain of ten.

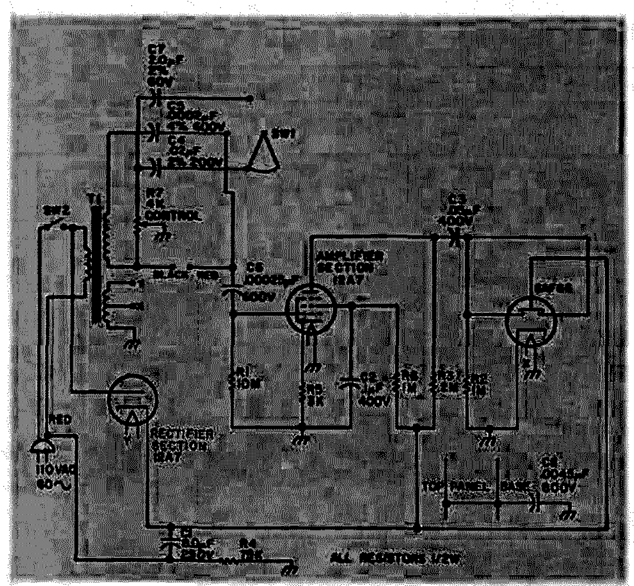

Fig. 1. Circuit diagram for capacitor bridge model BN.

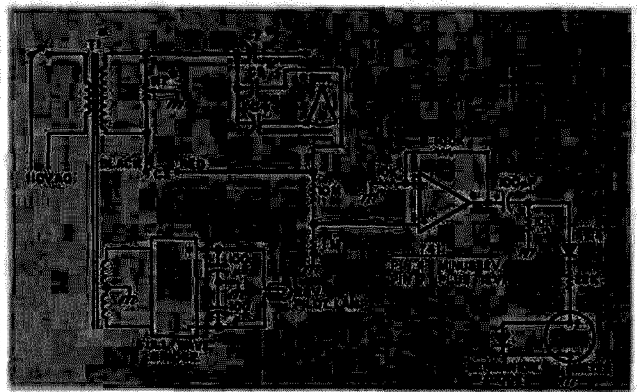

*Fig. 2. *Original components.*

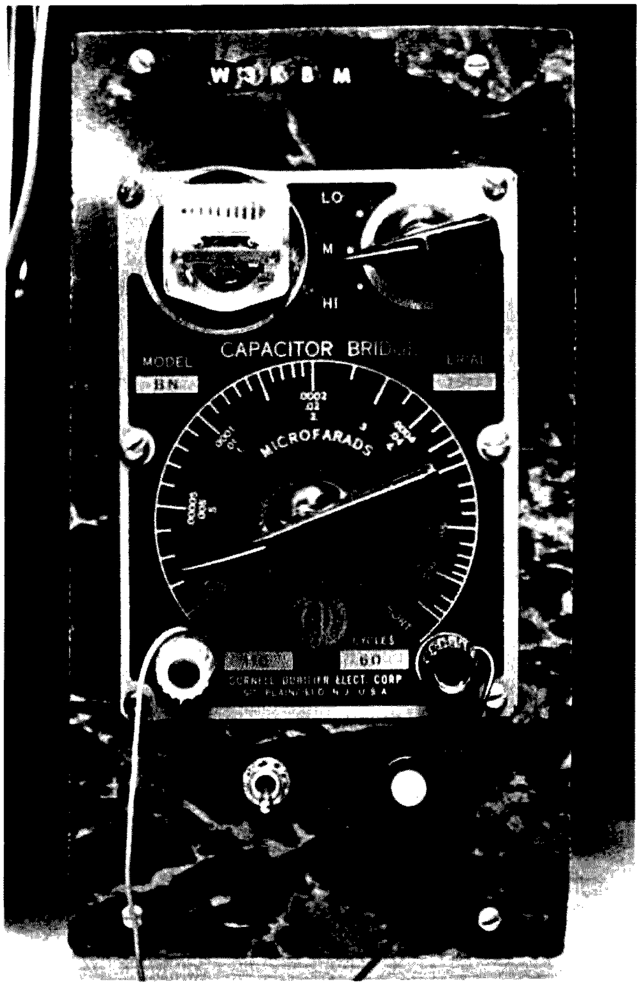

The balance indicator is a meter salvaged from an old tape machine and serves quite nicely in this function with the advantage over the old magic eye in that it does not need to be shielded from ambient light. Since the meter you may use may vary in sensitivity from the orphan I wound up using, here is a simple way to set up the proper series resistor to scale the meter. Unbalance the bridge and insert just enough series resistance so that the meter pins full scale. Then shunt the meter with the germanium signal diode, as shown in Fig. 2, and the meter indication should drop about one or two scale divisions. This simple method obviates any fuss and feathers log amp problems to handle the signal variations that the op amp handles. It allows for a very nice null reading to show balance, while saving the meter from overload.

The original transformer has two windings — one driving the bridge and the other a center-tapped winding which formerly lit the filaments of the tubes. This latter winding is used to feed a full-wave bridge, producing the dc voltages needed for the 741 op amp. I put a 28-volt pilot lamp across the output of the supply, which serves the second purpose of acting as a bleeder.

Be sure to ground the dial plate of the bridge to the ground terminal of the supply. If you use a metal cabinet, keep the bridge circuitry isolated from it, as it may upset bridge calibration on the low capacity scale.

Many times, I have seen similar units at flea markets or hamfests selling for a five-dollar bill. They are well worth recycling in this manner, considering the current cost of an equivalent bridge. ■

LETTERS

from page 14

teur Radio Club of Durham NC.

Charles W. Bryan WA4VKX
Durham NC

We know that articles about the 10 GHz band are of growing interest to amateurs. That's why we publish them. It's up to individuals to decide how they will use this expanding technology.

We feel that it is our obligation and the obligation of every citizen to speak out against a law so obviously foolish and useless as the 55 mph speed limit. For a couple of years now, the National Highway Traffic Safety Administration has been touting the 55 mph limit as a lifesaving measure. In fact, a close look at the NHTSA's own statistics shows that the reduction in traffic fatalities since 1973 can be credited to such factors as safer automobile design and increased use of seatbelts . . . but not the 55 mph speed limit. Check the May issue of Car and Driver *for a discussion of this topic.*

Although the government has set standards for exposure to microwave radiation, there is considerable informed opinion that the standards are not nearly stringent enough. I, for one, object to being irradiated against my will by police radar until it's been proven beyond a doubt that such irradiation is harmless. Thus far, the jury is still out.—Jeff DeTray WB8BTH/1, Asst. Publisher.

MICROWAVES

I was glad to find the article on microwave safety by Bob Thornburg in the April, 1978, issue of *73*. However, I was concerned that the article mentioned only the thermal

Continued on page 43

Steve Zawacki WA1UUK
8 Lind Terrace
Randolph MA 02368

Finding Radio Pests

—*basics*

It's now Thursday afternoon and that donkey who has been kerchunking the repeater since Sunday night is still making a pest of himself. What's worse is that he's adding an occasional "word" to his kerchunks. If your patience is now as short as the repeater's squelch tail, then it may be time for a fool hunt.

The only difference between a fool hunt and a fox hunt is the beast you're chasing. I respect foxes!

Almost all hunters agree that the fun's in the chase, not in the capture or kill. Also, the police and the courts usually frown on any creature, even a jammer, being physically abused or having its den vandalized. I haven't met a junior jammer yet worth a kilobuck fine and two years in a cage.

So if, after considering all the legal ramifications of assault, your group still wants to find the nuisance, here's a reasonably inexpensive and fairly accurate method of radio direction-finding. It may not be the fastest way (no microprocessor support), but the techniques have proved reliable over many years of practical application.

Maps

First of all, no attempt at radio direction-finding (RDF) will be successful unless accurate maps of the repeater coverage area are available. The center spot on your RDF map should be the repeater site. The more detailed the map, the better. Road maps can be used, but they are usually off scale. This will affect the accuracy of the RDF attempt.

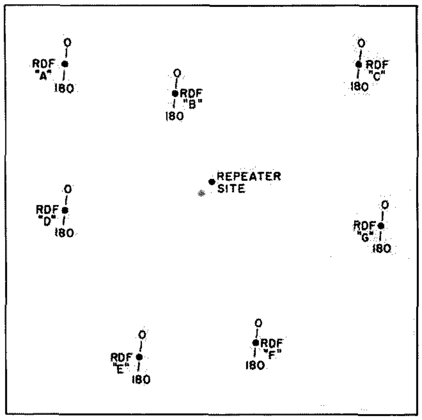

Fig. 1. RDF station overlay.

Equipment

Next you need stations with the minimum equipment necessary to conduct RDF. Since you can't rely on the entire net being available when you need it, try to designate as many stations as possible as RDFers. Each RDF station must have a receiver with a signal strength meter, a rotatable unidirectional antenna, and a means of precisely determining the direction of the antenna.

The receiver must be capable of receiving the repeater's input frequency. It does no good to try to RDF the pest on the repeater's output frequency, unless you want to make sure he hasn't run off with your repeater.

The antenna array does not have to be exotic. Any commercially-made beam will perform admirably. The most important thing is to be able to determine the exact direction the beam is pointed at any given time. The simplest system to use is the 360° circle with 0° as north. Some maps contain a grid, true and magnetic north. It doesn't matter which north your RDF net uses, just as long as everyone in the net uses the same one. Otherwise, the results of your RDF attempt will not be usable.

Antenna director calibration can be as simple or complex as you want to make it. The KISS (keep it simple, stupid) principle is usually the best to follow in situations where elaborate equipment is not available. Simply determine the exact direction of each RDF station from the repeater site using your designated north and the 360° circle. Now that you know this direction, the next step is to compute the direction of the repeater from the RDF station. This can be accomplished using the old pathfinder's trick of finding the back azimuth to a known location.

The formula for computing a back azimuth is: $X^\circ = Y^\circ + 180^\circ$ (if $Y^\circ < 180^\circ$) or $X^\circ = Y^\circ - 180^\circ$ (if $Y^\circ > 180^\circ$) ("X" being the desired back azimuth; "Y" being the bearing of the RDF station from the repeater site).

As an example, if station A is on a bearing of 70° from the repeater site, then the repeater site will be on a bearing of 250° from station A. If station B's bearing from the repeater is 310°, then the repeater's bearing from station B is 130°. So, whenever either station wants to calibrate its antenna director, the operator simply tunes in the repeater, adjusts the antenna direction until the strongest reading is indicated on the receiver's signal strength meter, and aligns the rotor director dial to read the predetermined back azimuth.

RDF Net Operations

The successful RDF activity can be divided into three parts: target notification, line bearing acquisition, and plotting.

1. Target notification.

The person designated as the controller of the RDF net should be the one to contact

the RDF stations with RDF requests. Since the repeater will probably be ineffective due to the jammer, and FM simplex may not reach everyone, the most logical means of communications may be Ma Bell's telephone system. If you really want to go through the efforts of RDF, then be prepared to spend a few bucks for phone calls.

2. Line bearing acquisition.

This is when the fun starts. After receiving an RDF request, the station performs a quick antenna director calibration on the repeater output frequency. Not only does this allow the RDF station a chance to insure the accuracy of his "shot," but it also lets him observe what the jammer is actually doing (kerchunking, swearing, etc.). The next step is to change to the repeater input frequency and try to hear the jammer. If the jammer's signal can be received, adjust the direction of your beam for maximum reading on the receiver's signal strength meter. The bearing indicated on the antenna director is then reported to the net controller.

Don't be surprised if a number of RDFers cannot receive the jammer. This is another good reason to have as many stations as possible involved in the RDF net.

3. Plotting.

Now we're getting down to the nitty-gritty. The net controller has now received the line bearings from the RDFers. He then goes to the RDF map which shows the locations of all the RDF stations on a plastic overlay (Fig. 1). Each RDF station location will have bench marks indicated above and below with 0° and 180°, respectively. These bench marks are necessary to orient a protractor on the map at each RDFer's location.

Let's follow the steps of a normal RDF plot. The controller has received a line bearing acquisition from RDF station A. He takes a protractor and orients it on the bench marks at A's map location. He makes a grease pencil mark on the protractor scale corresponding to the received bearing report. He then draws a straight line from A's location through the bearing mark and beyond. These steps are repeated for each RDF report.

At some spot on the map, a number of the bearing lines will intersect. It's a rare occurrence to have three or more lines intersect at the same spot. As a result, a process known as "triangulation" is employed.

Triangulation is the most commonly accepted method of determining a transmitter location based on RDF. However, it is only as precise as the accuracy and reliability of the equipment used by the RDFers.

Fig. 2 shows a situation in which three line bearings have been plotted on a map, forming a triangle. In order to determine the location of the jammer, place the point of a compass (the kind used for drawing circles) in the center of the triangle. Adjust the compass so the pencil part reaches the furthest angle of the triangle. Now make a circle with the compass. Your mystery station will be located somewhere within this circle (Fig. 3).

If the net controller receives more than three RDF reports, he uses the ones that form the smallest triangle.

While this system may not seem too precise, it's about as accurate as you'll find for the size of the investment. Remember, the system will be used by radio amateurs, not the Coast Guard or NASA. Very few hams have the loose capital to establish an elaborate locating station. The hobby forces us to use whatever we can afford to accomplish what we desire.

If a more precise location of the joker is desired, then out with the mobiles and DF loops. At least the triangulation method will narrow the search area dramatically.

The next problem comes with identification of the jammer. Now that you know who he is, what are you going to do about it? Any action outside the law will only lead you, not the jammer, to the clink. Take whatever advice that the FCC and any lawyer hams in your group are willing to give concerning any post-identification activity. Playing vigilante can be hazardous to your future. "If you can't do the time, don't do the crime." ■

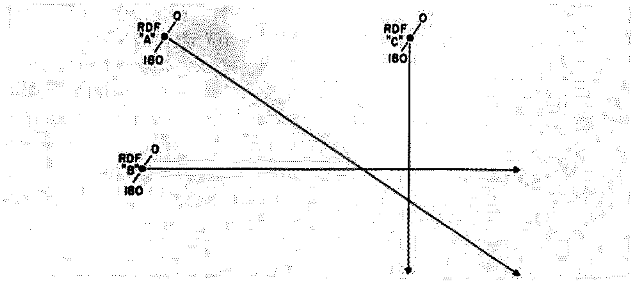

Fig. 2. RDF plot.

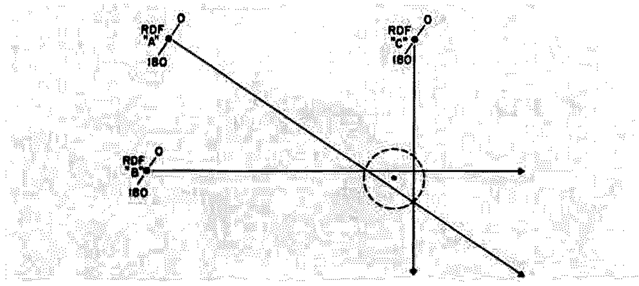

Fig. 3. Final RDF plot.

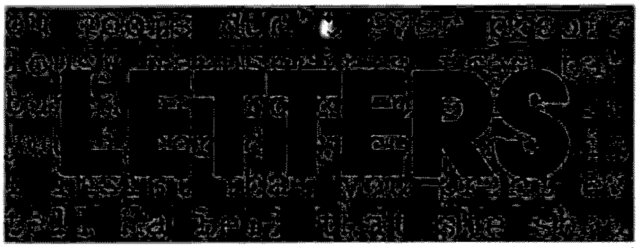

from page 41

dangers of microwaves. Although thermal, or heating effects, can be severe—such as the rapid cooking of skin and corneas— there are other, *nonthermal* effects which can, over time, produce their own serious results. These effects are called nonthermal because they do not occur by the *heating* of tissue, but instead by the interaction of certain radio frequencies with molecules or chemical reactions which occur in the body. We are already familiar with many nonthermal effects in our daily lives: radioactivity (radiation "burns," organ damage from ingestion, cancer), x-rays (cell damage, birth defects, cancer), and ultraviolet rays (sunburn, eye damage, skin cancer).

In the Dec. 13, 20, 1976, issues of the *New Yorker* magazine, author Paul Brodeur described in a long and scholarly article the frightening history of microwave research in the United States. He also described the long-term effects of microwave radiation (illnesses, eye problems, and more) which have plagued the lives of many who were at one time in their lives involved with microwaves. Although the U.S. armed forces were very slow, even resistant, to the idea of this type of nonthermal danger (indeed, the proper safety precautions would have made the cost of research considerably higher), the Russians very early showed an awareness of the possibility of such danger by setting their safety limits far below those of the U.S.

Even though the power levels involved in amateur radio are small, and the effects of these particular frequencies are not fully known, the experimenter should be aware that:

Continued on page 46

Dave Ingram K4TWJ
Eastwood Village #1201 So.
Rt. 11, Box 499
Birmingham AL 35210

Video Magic For Your Home

—to make boredom disappear

If you like working with unique aspects of modern electronics, there's an unlimited amount of enjoyment awaiting you in the world of home video equipment. Although this fascinating area of entertainment has previously been relatively expensive, today's market now offers low-priced closed circuit TV systems, cartridge video tape recorders, and a variety of TV games which can be assembled and used in your own home. A miniscule combination of these units can quickly turn your den or recreation room into a personalized "Aladdin's Castle" of fun. Technical expansions of these systems are limited only by one's imagination, desires, and available time.

As the area of "non-radiating video systems" is quite diversified, this article will attempt to describe some of its capabilities and assets on an informative basis. Specific construction projects, like interface circuits, converters, etc., vary with individual setups, thus precise technical details have been kept to a minimum. I'm sure, however, the ideas presented here will give you an accurate overall view of home video fun.

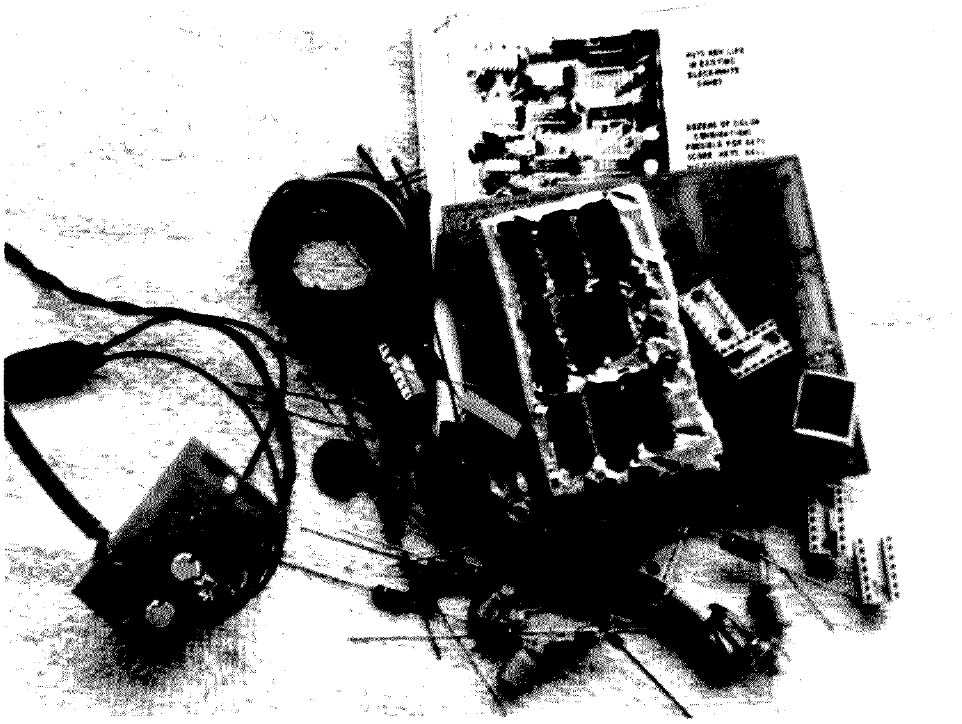

Home brew haven! Here's the ATV Research Chroma-plex 7700 color converter for home video games ready for construction. Highly detailed instructions make this affair just a few hours long. The unit on the left is the ATV Research Pixe-Verter which permits video to modulate a simple VHF oscillator.

TV Games

A quick glance through the advertisements in any recent issue of *73 Magazine* will verify that this field has expanded substantially since the days of TV ping-pong and hockey.

Modern game ICs generate auto races, airplane dog fights, duck shoots (a modified BB gun with a phototransistor down its barrel does the "firing"), and much more. The games are easily assembled on foolproof printed circuit boards, and you're ready for action. The usual cost of these game chips

is between 10 and 20 dollars.

If you build a game that has video only output, you'll need to tap into your home TV at a point on the first video amplifier's input. Carefully check the schematic of your television before deciding on this point. Locate a place which is after the 4.5 MHz and 920 kHz traps and doesn't upset any biasing arrangements of the video amplifier's input. Problems with local TV stations "feeding through" video stages and mixing with game displays can be eliminated by using a switch to temporarily disconnect b-plus from rf and i-f stages.

As an alternate solution to modifying the home TV, an externally modulated VHF oscillator (commonly known as an rf modulator) may be connected between a TV game's video output and the antenna terminals of any television for instant action. One example of such a converter is the Pixe-Verter which costs approximately 9 dollars and is manufactured by ATV Research, 13 and Broadway, Dakota City, Nebraska 68731.

If you tire of viewing any of your TV games in black and white, ATV Research also manufactures a Chroma-Plex 7700 digital color converter which performs beautifully. The unit connects between a game's video output and a VHF oscillator or TV's video amplifier and generates dozens of color combinations. The cost of this kit ranges from 20 to 35 dollars, depending on the size of your junk box.

CCTV Systems

There's a kaleidoscope of useful applications for the presently popular and comparatively inexpensive closed circuit TV systems. These units are available from sources like Advance Video, 5835 Herma, San Jose, California 95123. The systems can be used for video babysitting, for implementing hands-off magazine reading (close-up lenses permit 6x magnification), for monitoring outdoor activities, for amateur fast scan and slow scan TV operations, and much more (sunbathing enthusiasts will find their standard equipment zoom lens an absolute necessity!). Let your wit and humor be your guide.

Most CCTV cameras are basically inexpensive fast scan units which output with 4 MHz of conventional TV video. You'll need another one of the previously mentioned modulated VHF oscillators if you want to connect it to the antenna terminals of a regular TV set. That, incidentally, brings to mind a quick and easy means of getting CCTV signals from one end of your house to the other. Simply disconnect your outdoor antenna (you surely don't want the neighbors to confirm their vicious suspicions of you) and use your antenna leads to convey the signal between rooms. Be sure your TV signal doesn't radiate further than a hundred feet, however, or the FCC gang will hunt you with a 5-ton ax.

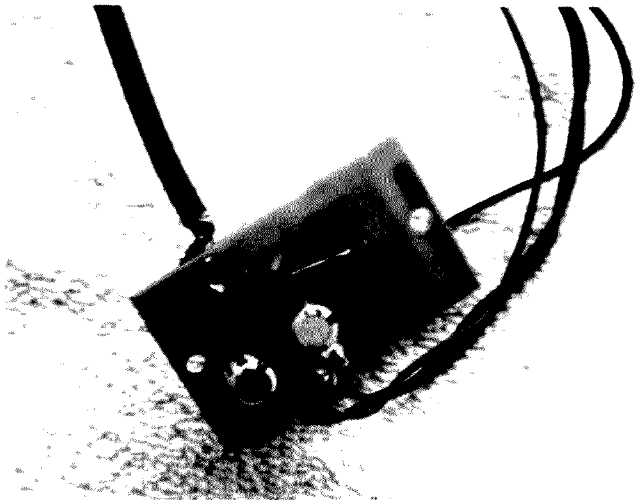

Close-up of ATV Research Pixe-Verter. This unit is a miniature TV transmitter which may be modulated with conventional video. Output is selectable – channels 2 through 6.

Video Tape Recorders

Until recent times, one could merely dream of owning his personal video taping system. The typical cost of such units was definitely in the kilobuck range, and specific information on their use was rare as slippers for snakes' feet. Today, however, that situation has changed radically. Companies like Advance Video now distribute high quality color video cassette recorder/players which sell for approximately 300 dollars and perform very well. Advance Video's matching CCTV

Video entertainment gear set up and ready for action. The cartridge tape deck is propped on the footstool and support circuitry is behind it. The CCTV camera and TV game can drive either television or tape recorder. The recorder can also tape programs during the operator's absence.

camera sells for 150 dollars. These units can be preset to view household functions or record TV programs during your absence and replay them as desired. A fantastic variety of prerecorded programs for these units is also available from Advance Video. The time required to set up one of these cassette video tape recorders is a brief evening's activity. You'll need another modulated-VHF oscillator if you want the VTR's output to feed the antenna terminals of your TV set. However, you must connect the VTR's input to the video detector output in your TV for recording off-the-air programs (remember the previously described bias considerations before diving into your TV's circuitry). Advance Video Company distributes an inexpensive interface board and detailed instructions for correctly making these connections, so there's very little chance of going wrong if you follow their instructions.

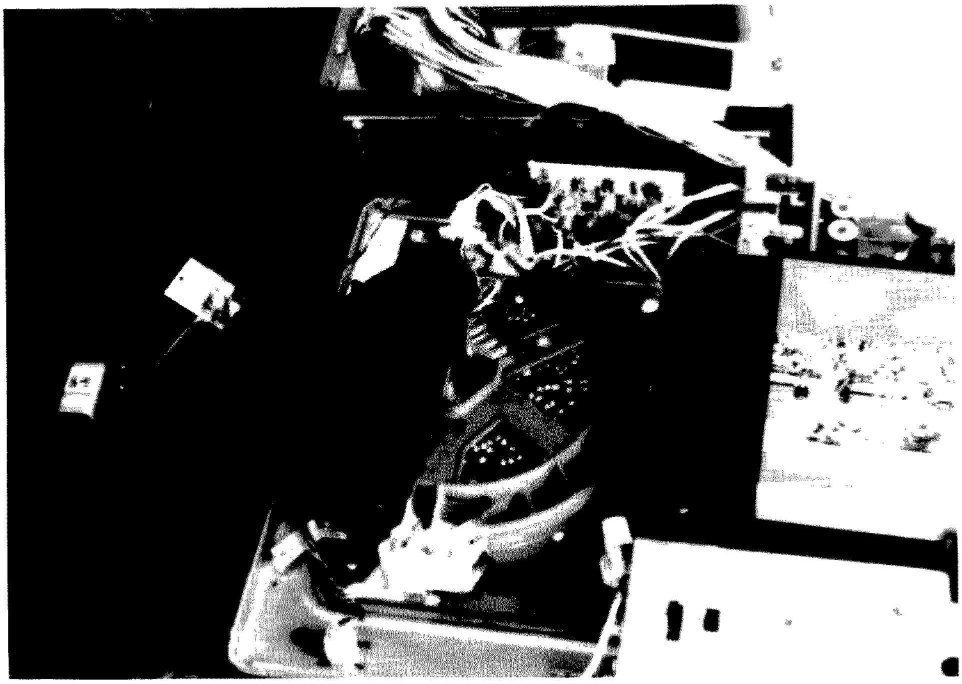

Close-up of Advanced Video's cartridge tape system during use. Deck assembly contains rotating pickup heads, tape transport, and main controls. The electronics unit is the separate "fish tank" behind the deck. The small unit on the footstool is the VHF oscillator which interfaces video outputs to the television's antenna terminals.

Once the tape system is working smoothly, you can have a ball taping programs, viewing special interest tapes, watching the family, and practically anything else your imagination can devise (let's see . . . football replays are on channel 3, the next door neighbor's on 4, the Friday movie's on 6, the TV game's on 8 — there's still room for more activity on channels 9 and 11).

Tying Everything Together

Once you've acquired a small arsenal of video equipment and get it scattered around the living area, you'll need a means of housing everything in one place. A large home brew cabinet with controls on the top and input/output connections on the rear should fill the bill perfectly. If you plan this construction project with an eye toward future expansions, a complete video entertainment center will be the final result. You can then sit back and play games while recording the best shots (plus adding a variety of colors for special effects), produce instant replays of televised shows, tape record your own home movies, and much more without stopping every few minutes to rewire patch cables. Later you might interface your pet computer to the TV for video readouts or modify a tape cartridge module to act as an analog storage device for generating unusual TV games. Ideas like "SSTV Slalom Game" (May, 1977, *73 Magazine*, page 58) can also be implemented on fast scan TV, if you care to experiment with new methods.

In conclusion, I would like to emphasize that nonradiating video systems are tremendous fun, relatively inexpensive, and require only minor technical expertise to construct and operate. They can be enjoyed for an indefinite length of time and depreciate only slightly in value. They are also a perfect means of getting started in two other fascinating fields: amateur fast scan television and slow scan TV. Now, wouldn't you rather be operating video, too? ■

LETTERS

from page 43

1. nonthermal radiation damage occurs over a long period of time and is not felt immediately;
2. the exact safety limits and the mechanisms of damage are not known, although long-term evidence from numerous sources shows that danger does exist; and
3. should long-term effects be proven for amateurs working with microwave equipment, this may be used as firepower to further curtail the frequencies available for amateur radio enthusiasts.

I think anyone working with microwave radiation would do well to take as many precautions as possible to minimize exposure, even beyond the thermal safety limits suggested by Mr. Thornburg.

Further information may be obtained in the book *Microwaves: The Deadly Radiance*, based on the original articles.

Bob Silberstein
Cambridge MA

DE-ZAP STRAP ZAP

I am writing you regarding the unexpected safety hazard in the design of the "De-Zap Strap" article in the May issue. If the strap is made as shown in the article, the wearer will be hard (low resistance) grounded anytime the strap touches the case of a grounded piece of equipment, metal bench, etc. At this point, the stage is set for a serious, possibly fatal, accident. All that is needed now is to accidentally touch a voltage source with the other hand. The ideal electrocution path now exists across the chest cavity and less than .1 Amp current flow will be fatal.

Continued on page 53

Jerrold Swank W8HXR
657 Willabar Drive
Washington Court House OH 43160

Novice Guide To Phased Antennas

—part II

Many hams have been intrigued by the idea of phasing three cardioid patterns, as shown in Fig. 1. It seems as though that would make a good beam which could be electronically rotated. The idea is usually seen with antennas spaced a quarter wave apart and with a quarter-wave delay to make possible firing in six directions for complete 180° rotation.

I have talked to quite a few hams who have tried this, and, while it is impressive to hear the signal go down and up as the pattern is rotated, there are some problems.

For one thing, the pattern for quarter-wave spacing and quarter-wave, or 90°, delay is 120° between half-power points, as you can see in Fig. 2. This means that you can get pretty complete coverage—better than a single antenna in any direction—with just two antennas.

Another problem is that the third antenna, whichever one is unused, causes distortion of the pattern unless it is completely detuned. This means, usually, that both the main coax lead and the shield must be disconnected. In addition, if the lead-in is near an odd multiple of a quarter wave at the frequency in use, the disconnected lead may still show an electrical short, and the antenna will still cause trouble. This problem does not occur with two antennas, since both are driven.

It is, however, easy and profitable to phase three antennas with half-wave spacing, as shown in Fig. 3. All can be driven broadside, causing three figure-eight patterns, covering six directions, with very good nulls in the unwanted directions. All three leads are identical, and there is no necessity to add or subtract delay lines. The swr is low with no matching problems. By making all the lines multiples of a half wave, the disconnected antenna effectively opens the unused antenna, detuning it completely. At a half wave apart, there is little effect on the other two antennas.

A figure-eight pattern is useful for stations in the center of the U.S.A. so that stations in the east and the west can be joined in a rag chew. You can easily apply the pattern to your location and see if it would be good for you.

The inverted-vee dipole can easily be phased, either end fire as in Fig. 4, or collinear as in Fig. 5. The collinear array takes a long space, but not much width. It could, for example, be installed on a fence line, without taking up any appreciable yard space. Fed to a T-connector between the two antennas, it would give a figure-8 pattern with about 3.8 dB gain. It would not be practical to switch a delay line in, as the ends of an inverted vee have a loss of about 6 dB.

The end-fire array can be spaced a quarter wave and arranged with a delay line of 90°, or a quarter-wave delay line. If two feedlines are brought into the shack, the delay line can be switched into either line, thus reversing the array. The pattern will be the cardioid similar to Fig. 2.

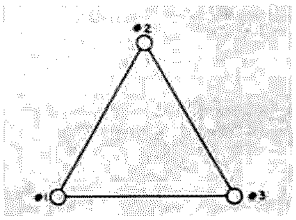

Fig. 1.

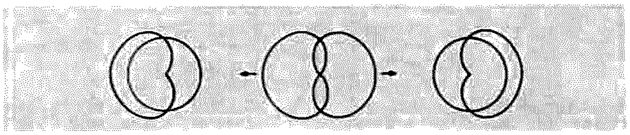
Fig. 2.

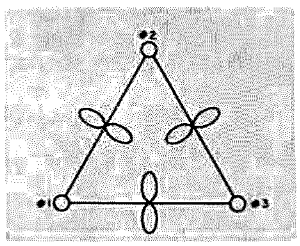

Fig. 3.

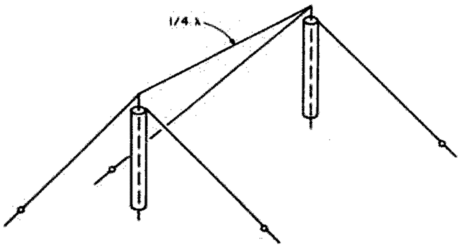

Fig. 4.

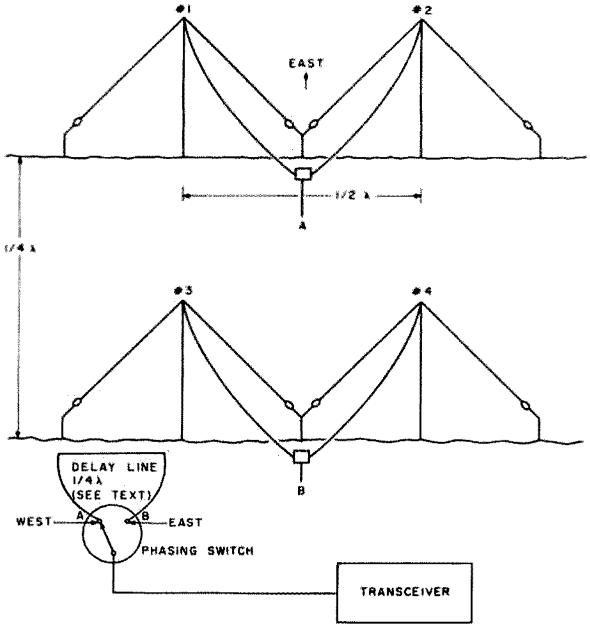

Fig. 5.

Any of the delays and patterns shown for vertical antennas in part I of this article can be used with these antennas. Both the collinear and end-fire arrays can be suspended either from two push-up masts or a nylon cord strung between two towers or poles.

By using eighth-wave spacing, and a 3/8-wavelength (135°) delay, it is possible to support a pair of inverted vee dipoles from a single tower using a piece of masting as a spreader, as shown in Fig. 6. On 40 meters, this would be 17', and the delay line would be 33'10". The gain would be close to that of a 2-element beam.

Of course, the ultimate array is the one shown in Fig. 7 with two end-fire pairs in broadside, which combines the figure-eight pattern of the broadside connection with the end-fire unidirectional pattern to obtain a narrower and higher gain unidirectional lobe.

In the May, 1975, *Ham Radio*, this array was written up in detail, after I designed the array for use in Antarctica at McMurdo Station. Combining the 3.8 dB gain of the broadside array with the 4.5 dB of the end-fire array gave nearly a 9 dB gain, as shown in the pattern at C. This is better than most 3-element beams, and the angle is lower than a beam unless it is installed at least a half wave above ground.

This array was made up of verticals, but the same plan could be used with inverted-vee dipoles. Using the pair shown in Fig. 5 and placing a similar pair a quarter wavelength behind them with four push-up masts, you would have a potent arrangement. You could feed the broadside pair with a T-connector, and bring the two feedlines into the shack. By inserting a quarter-wave piece of coax in either line, you could reverse the array as needed.

This would take a little space—about 140 feet long and 34 feet wide—but the four masts and the wire would cost less than a beam, and you would not have any concrete to pour or towers to climb. It would be less subject to man-made electrical interference than verticals, and, by using a pulley at the top of each mast, you could make tuning adjustments or change antenna lengths easily.

The principles of phasing can also be used for two meter antennas and CB antennas to advantage. I once had a pair of CLR CB antennas mounted on a piece of 1¼" water pipe with ells at each end and a T in the center. The whole thing mounted on a TV antenna rotator. The pipe was 9 feet long for quarter-wave spacing at 27 MHz, and it really made an excellent beam. See Fig. 8.

That was where I found that the two antennas used must be identical. I used an older CLR vertical and added a new one. In the meantime, Hy-Gain had added an rf coil in the base, and the pattern was not at all what I wanted. I phoned them, and they explained the change, after asking me if I had used an old one and a new one. I got a second new one, and then it worked perfectly.

The coil in the base threw the phase out 180°, and that made a cardioid pattern impossible.

Picture a pair of two meter verticals spaced 9½" (quarter wave) or 19" (half wave). If a repeater needs to fire from an outlying area into a city or to give coverage along a highway, this is the easy way to do it. A CB station in a service area can make a figure-eight pattern to aim up and down a highway and cut down interference from stations in town by using half-wave spacing.

You have probably seen the pairs of CB verticals on cars, with one on each side of a car and the antennas fed by equal lines to each antenna. This gives a slightly elongated pattern in the direction of the highway and cuts down the signal from the sides.

There are several popular antennas which use the phasing principle, such as the ZL special, the 8JK, the Sterba curtain, and the Bruce and the bobtail curtain, among others. Even the quad can be driven as a phased array.

There is one basic difference between a parasitic array and a driven array. The antennas in a parasitic array are either shorter, for a director, or longer, for a reflector. The antennas in a driven phased array are of identical size. This makes it possible to use antennas which it would be difficult or impossible to lengthen or shorten, such as trap-

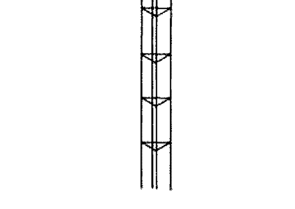

Fig. 6.

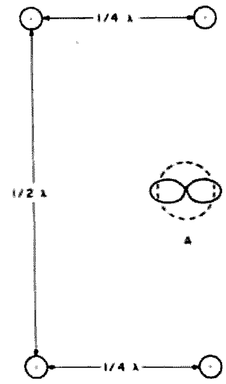

Fig. 7. Horizontal radiation pattern of half-wavelength spaced antennas is shown at A. The pattern at B is that of quarter-wavelength spaced antennas. At C is the pattern of the four-element phased array.

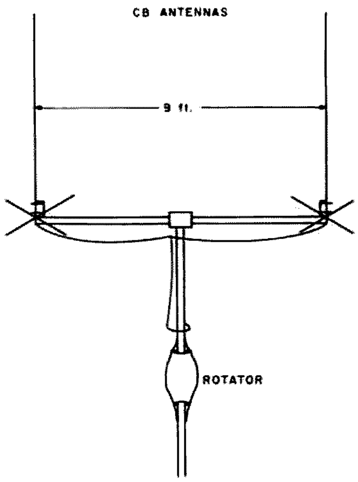

Fig. 8.

type antennas. It also makes possible instant reversal of direction without a rotator or complicated switching.

One example is a pair of Mor-Gain antennas which I used with excellent results as a phased pair. A Mor-Gain antenna is a shortened design which reduces the length by nearly half and allows the use of two or more bands with the same antenna. See Fig. 9.

The ones I used are shown here. Each consisted of a 40/20 arrangement, with the 40 meter section being reduced from 66 feet to about 37 feet, and had interlaced a full length 20 meter antenna. I used them very successfully in Antarctic phone patch traffic as a pair of slopers on forty meters, with half-wave spacing. I often used to pin the meter on the KWM2A at South Pole Station with this antenna.

A friend of mine, K7PPQ in Las Cruces, New Mexico, is preparing to use the same two antennas as a pair of phased verticals suspended from a 17′ boom. The shortness of the antennas makes it possible to use a 40′ mast. To suspend a full-size 40 meter vertical dipole would take a 70′ mast. The lead-in from each antenna will be brought into the shack, so delay lines can be inserted for either reversal or to change the pattern to a broadside figure-eight when desired.

Rodney O'Rourke K5VYJ used a pair of Mor-Gain antennas as a two-element 40/20 beam with excellent results by spacing them 17′ with a quarter-wavelength delay on 40 meters, which was a half-wavelength on 20 meters.

At this point, I had better explain a few things about delay lines in phased arrays, as well as some matching methods. I won't make it very difficult, as this applies to all phased arrays, unless you use a tuner to take care of the matching.

When a pair of antennas are spaced a quarter wavelength and a coaxial delay line is used to feed the leading antenna, the coax line will not reach between the two antennas. This is because the .66 velocity factor makes a quarter wave of coax too short. For example, if two antennas on forty meters are spaced 34′, which is the free-space distance, the coax, with a velocity factor of .66, will be only 22′6″.

There are two solutions. One is to use a ¼-wavelength delay line, which will be 67′6″, and will reverse the direction. The other is to bring the two lines into the shack, or at least away from the antennas, and then insert the delay line.

I usually bring the lines into the shack, where I have complete control over the phasing. As long as the two lines are equal, they can be any length.

The next thing is the matching. While a 50-Ohm line is a pretty good match for a single vertical, when two are connected in parallel, the impedance falls to 25 Ohms. To counteract this, we often use a quarter wavelength of 72-Ohm line to raise the 50 Ohms to 100 Ohms in each line so that, when they are paralleled, they would be 50 Ohms again.

When you use four

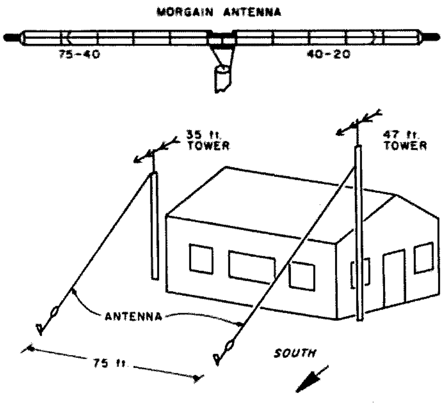

Fig. 9.

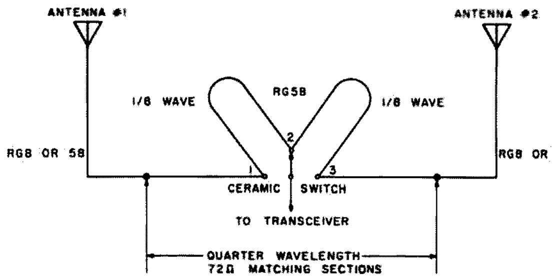

Fig. 10.

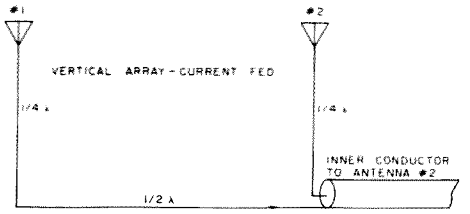

Fig. 11.

antennas, you can go through the same procedure. You can put a 72-Ohm section in each line from the pair of antennas. Of course, if you have a good matchbox, you won't need to use this method.

Switching is another problem. Fig. 10 shows a simple method of moving a delay line from one direction to the other and also of feeding the pair in phase for broadside operation.

When the switch is on position 1, the quarter-wavelength delay is in series with antenna #2, and the reverse is true on position 3. On position 2, the signals are fed into both antennas at the same level. This is for quarter-wave spacing. For antennas a half wave apart, two sections of quarter-wave length coax can replace the eighth-wave sections.

Of course, with half-wave spacing, putting the switch on either position 1 or position 3 will have the same effect, merely changing from broadside to end fire.

For a really unusual method of feeding a pair of phased verticals, see Fig. 11. This array is used by Tom W7DND in Bremerton, Washington, with a parasitic reflector behind it and does a fine job. Note that the antennas are fed in phase by turning over the coax line, with one antenna going to the center conductor and the other to the shield. The half-wave line feeding antenna #1 puts that antenna back in phase with #2. Notice that no radials or ground connections are used.

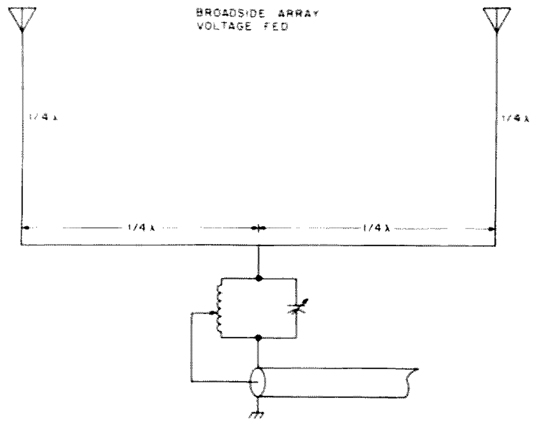

Fig. 12.

In Fig. 12, the same array is used with a voltage feed in the center, using link coupling to the coax feedline. This is a sort of upside-down bobtail array.

I hope all this has not made phasing seem complicated, but it shows that that are many types of phased arrays, none of which are very complicated.

Pick one which suits your purpose and good luck. ■

N. V. Cohen WB4LJM
7719 Sheryl Drive
Norfolk VA 23505

J. M. Franke WA4WDL
1006 Westmoreland Ave., Apt. 225
Norfolk VA 23508

Can A $20 FM Rig Work?

—testing the VHF Engineering TX150 xmtr

Neither of us has ever written a review article before, but, after building several TX150s, we felt that other amateurs would be interested in our findings. The TX150 is a low-power two meter FM transmitter. It consists of three sections – a modulator, an oscillator multiplier, and a final multiplier output stage.

The first problem became apparent when the kits arrived. The only instruction is a single page showing the schematic, parts list, and layout. While this presents no great drawback for experienced builders, the beginner should realize that this is not a Heathkit-type project. The schematic has one omission – there should be a jumper from the junction of C12 and L1 to the junction of R9 and RFC2. The parts are of high quality, and the coils are prewound with the exception of RFC1. The beginner might have a problem recognizing RFC2; it appears the same as a 1/2-Watt resistor, but has a tan body. The board is glass epoxy, and the copper is tin plated for easy soldering. There are no mounting holes, so plan to drill some before assembly is started. The circuit board is only 25.4 mm by 115 mm.

Assembly is easiest if all the capacitors are mounted and soldered first, followed by the single jumper with its insulating tubing and the two rf chokes. Next, the coils are mounted and soldered after clipping off the small plastic tabs on the bases. Then the audio components and resistors are mounted and soldered. The resistors are mounted vertically with one end flush with the circuit board. R12 is mounted under the board. Finally solder in all of the semiconductors after double checking their orientation. The entire transmitter strip can be assembled in two or three hours.

Inserting an 18 MHz crystal, testing began. Tune-up is simple. Using a 50-Ohm, 1-Watt resistor for a load with a diode detector as in Fig. 1, the oscillator and then the final and output coils are peaked for maximum output. Table 1 gives the measured output power, input current, and total input power for supply voltages of 6 to 13 volts. Note that the output power with a 13-volt supply is an impressive 300 milliwatts.

What about harmonics? A series of tests were made using a Hewlett-Packard model 8554L spectrum analyzer set up as in Fig. 2. The photographs show that the multiplier frequencies are more than 30 dB down from the carrier. The second harmonic is 50 dB down, and the third is 48 dB below the carrier level. The relatively good harmonic suppression is due to the double tuned output. Next, a 2 kHz tone was applied to the microphone input. The modulation spectra are included in the photographs. Photo C is with 3

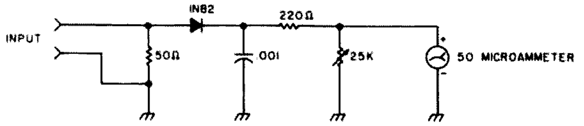

Fig. 1. Simple relative power meter for tuning the TX150.

Supply voltage	Current	Input power	Output power
13.0 V	0.11 A	1.43 W	300 mW
12.0 V	0.10 A	1.20 W	250 mW
11.0 V	0.095 A	1.05 W	200 mW
10.0 V	0.09 A	0.90 W	160 mW
9.0 V	0.06 A	0.54 W	100 mW
8.0 V	0.05 A	0.40 W	40 mW
7.0 V	0.03 A	0.21 W	12 mW
6.0 V	0.02 A	0.12 W	2 mW

Table 1.

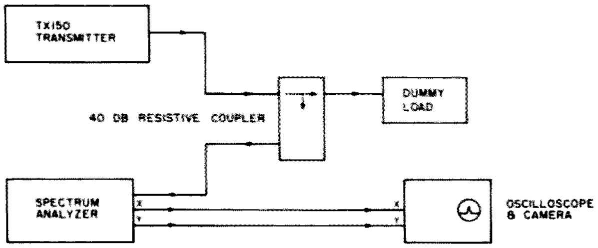

Fig. 2. Setup used for spectrum analysis.

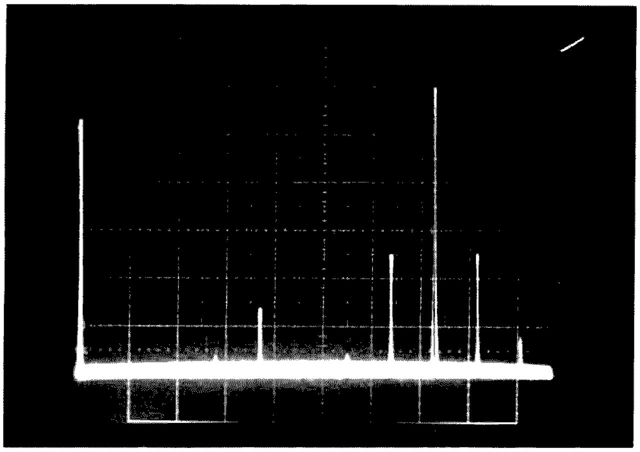

Photo A. *Spectrum of TX150. Horizontal — 20 MHz/division; vertical — 10 dB/division. (Spike on left is 0 frequency mark.)*

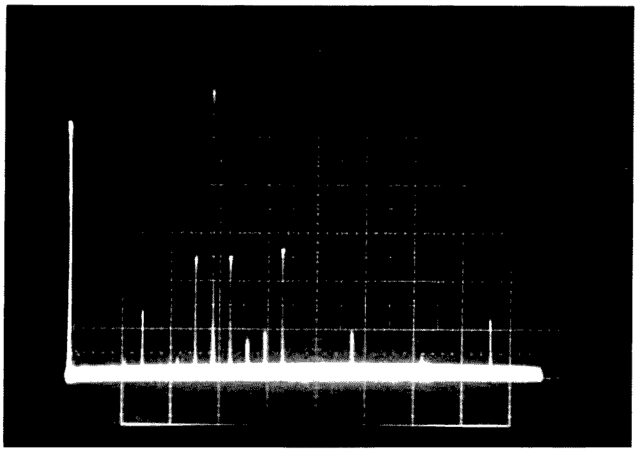

Photo B. *Spectrum of TX150. Horizontal — 50 MHz/division; vertical 10 dB/division. (Spike on left is 0 frequency mark.)*

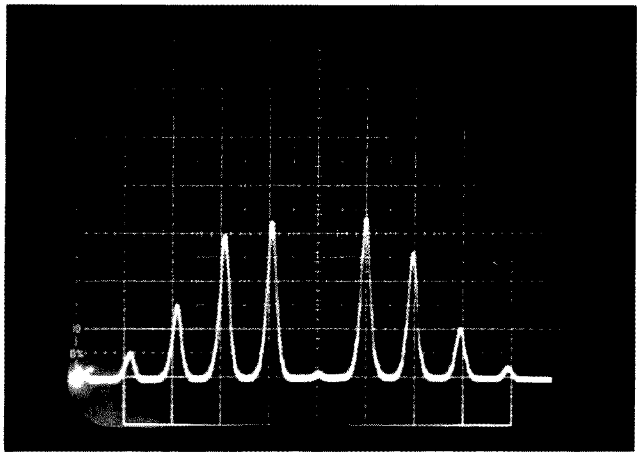

Photo C. *Modulation with 3 millivolts peak-to-peak 2 kHz tone. Horizontal — 2 kHz/division; vertical — linear.*

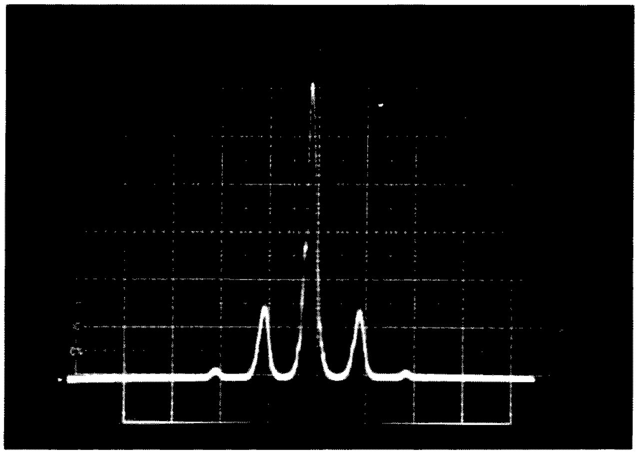

Photo D. *Modulation with 10 millivolts peak-to-peak 2 kHz tone. Horizontal — 2 kHz/division; vertical — linear.*

millivolts peak-to-peak input, and Photo D is with 10 millivolts peak-to-peak input. In Photo D, the carrier is near zero, or, in other words, the zero order Bessel function is zero, indicating a modulation index of 2.4. Since the modulation index is the ratio of the peak deviation to the modulating frequency, multiplying the 2 kHz tone by 2.4 yields a peak deviation of 4.8 kHz with 10 millivolts peak-to-peak audio input. This is close to the desired 5 kHz deviation. Distortion becomes evident when the audio input exceeds 20 millivolts peak-to-peak. The transmitter was run key-down for three hours with a 12-volt supply with no adverse effects. The final transistor got warm, but the output remained constant.

All things considered, the TX150 is well worth the $19.95 price tag. It is an economic answer for projects requiring a stable low-power transmitter strip that is very compact. With the present proliferation of repeaters, it presents an easy starting point for beginners to join in the fun on two meter FM. ■

LETTERS

from page 46

A method of discharging static buildup is certainly a necessity when working with MOS and many other devices, but it must be made so that the wearer's safety hazard is not significantly increased. The resistance must be located at the wrist so that accidental shorting of the grounding wire will not bypass the isolation resistance. The resistance value should be designed to limit the worst case current exposure to 1 to 2 milliamperes (i.e., the resistance value should be selected so that with the highest voltage in the work area passing through the isolation resistor and the person, assuming the person has zero resistance, the current in the circuit will not exceed 1 or 2 milliamperes).

The design must also consider the *voltage* rating of the resistors. A typical 1/4 Watt resistor is limited by a voltage rating of 250 V; therefore, several resistors in series may be required to safely handle a voltage equal to the highest voltage in the work area (don't forget those scope and video terminal HV supplies). Once the resistance value is determined and located at the wrist, the exposed braid conductors should be replaced by a good piece of test lead which is flexible enough but much lighter and will not be a source of short circuits as arm movements cause it to be dragged across items on the bench.

J. K. Galleher
Bowie MD

GETTING GEAR

There have been several articles written lately about the

Continued on page 55

David F. Miller K9POX
7462 West Lawler Avenue
Niles IL 60648

Hiss Exterminator

—an ear-saver for the TS-700A

If you rather enjoy monitoring noise while waiting for the local SSB gang to sign on for the evening or while parked on the DX frequency awaiting those elusive skip signals on 2 meter sideband, then this modification is not for you. Personally, however, I find continuous background hiss (noise) very distracting, and, after five or ten minutes of it, my ears seem to become numb (perhaps I spent too many years on FM where effective squelch circuits are commonplace). At any rate, I began looking around for a reasonably inexpensive solution to the problem, and the circuit to be described was the result of that effort.

I'm running the Kenwood TS-700A transceiver on 2 meter sideband (as are many others) along with Kenwood's VOX-3 voice operated transmit/receive switch, so it seemed logical to attempt to utilize as much of the existing circuitry as possible for the audio squelch feature.

If you're not familiar with the Kenwood VOX-3, it's a compact (1-5/8" x 5-1/8" x 4-1/2"), good-looking, and well-engineered box full of electronic goodies, which is directly usable with the TS-700A and adaptable to other rigs. Its price qualifies it as one of the best bargains in town.

It has "VOX gain," "anti-VOX gain," and "delay time" controls all up front, and it derives its operating voltage from the mating transceiver via a 9-pin miniature tube socket (shades of the good old days) located on the rear apron. But, best of all, it also has about half of the circuitry that's needed for an audio squelch system, namely, the anti-VOX audio detector and its associated amplifier. What I added in the circuit diagram shown is a Darlington connected relay driver amplifier, a sensitive (and quiet) reed relay, and a way to reroute the audio to an external speaker through this circuitry. Yes, an external speaker must be used when the audio squelch feature is desired (you're probably already using one, though), and a miniature 1/8" phone jack is added to the rear apron of the VOX-3, next to the 9-pin socket, for this purpose. A dummy 1/8" miniature phone plug (the one supplied with the TS-700A) is inserted in the "external speaker" jack at the rear of the TS-700A in order to disable the built-in speaker when using the audio squelch feature.

For purposes of circuit operation details, speaker level audio is tapped off pin 1 on the 9-pin VOX-3 rear socket, fed through the normally-open contacts of the reed relay, and fed back out to the external speaker via the new 1/8" phone jack. The 13-Ohm, 1-Watt resistor shown as R20 acts as a constant load for the audio output stage of the transceiver. The only control on the VOX-3 that has any bearing on the audio squelch circuitry is the anti-VOX gain, which sets the threshold of the squelching action. The hold-in time of the reed relay is determined by C11, the 500 uF electrolytic capacitor across the relay coil. Diodes D9 and D10 will protect the transistors in the relay driver stage from transients, and R21 drops the Vcc (operating voltage) to about 12 V dc,

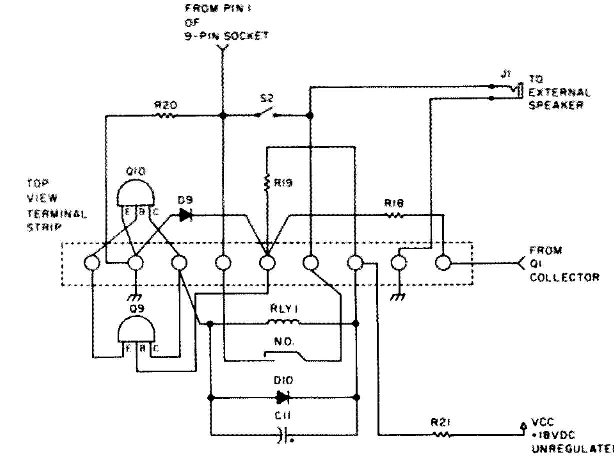

Fig. 1. Pictorial diagram for the VOX-3 audio squelch circuit.

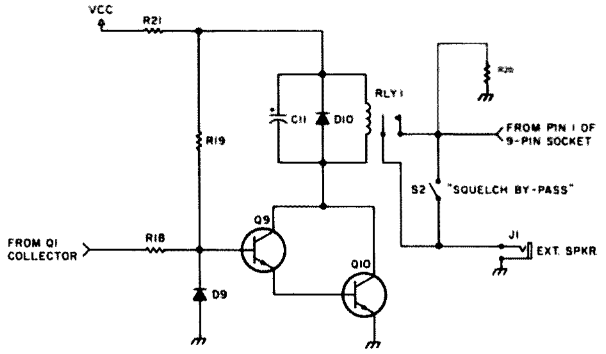

Fig. 2. Schematic diagram for the VOX-3 audio squelch circuit.

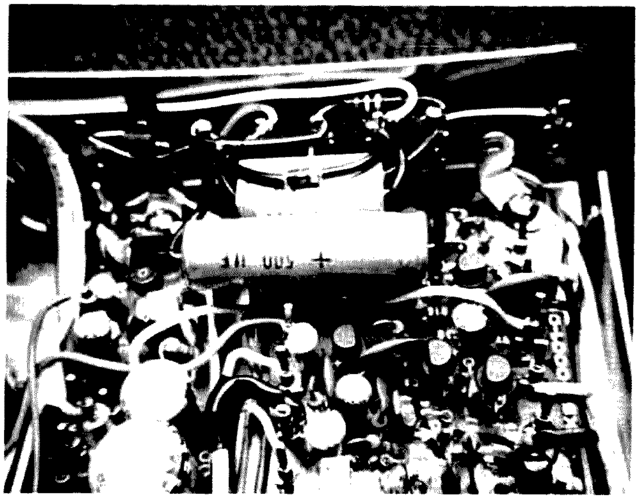

Photo A. Top view of VOX-3 interior showing audio squelch modification.

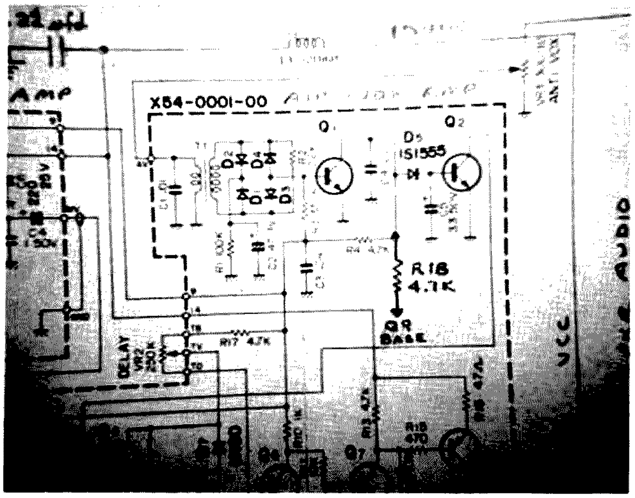

Photo B. Schematic diagram supplied with VOX-3 showing tap-off point for new R18 at Q1 collector.

inasmuch as the Vcc available from the TS-700A is about 18 V dc when operating from 120 V ac mains. R18 and R19 are biasing resistors for the Darlington connected relay driver transistors, and the squelch bypass switch S2 (which I mounted on the front panel midway between the anti-VOX gain and delay time controls) shorts the normally-open contacts of the reed relay when no squelch action is desired or when using the VOX-3 as a VOX unit. Just in case you've wondered, this modification does not hinder you from using the VOX-3 in its old way. Simply activate the bypass switch and operate it as you always have in the past. None of the wiring or parts layout is critical, so feel at ease with whatever physical layout changes you may wish to incorporate. The photograph of the mounting terminal strip (with all parts installed) and the pictorial layout drawing show how I adapted the circuit to my VOX-3. A 9-lug terminal strip was used, which fit very neatly and required no additional drilling or mounting hardware. The existing circuit board mounting screws are used, and the result is a mechanically rigid finished product. You must remove the four mounting screws from board #X54-0001-00, carefully turn it over, and solder a wire to the Q1 collector circuit foil pad, but this is the only connection that cannot be made from the top of the unit. As mentioned before, speaker audio is picked up from pin 1 of the 9-pin socket; this same socket will provide Vcc on pin 9 and ground on any of pins 2, 4, or 7.

In order to give you an idea of what to expect in the way of control settings, I normally run all three of the VOX-3 panel controls at the 12 o'clock position when operating VOX control. When using the audio squelch, the anti-VOX gain is run at 10 o'clock with the TS-700A "af gain" at 9 o'clock. The reed relay holds in about 1-1/2 seconds between words on an S9 signal using the 500 uF across its coil, and the unit will unsquelch with a signal too weak to register on the S-meter when standby monitoring with the noise blanker activated.

No claims of engineering excellence are made for this circuit other than that it does work, as WB9DRA and I can testify, and, after all, that's the bottom line! ■

Parts List

C11	500 uF, 35 WV dc electrolytic
D9	1N4148 diode
D10	1N4005 diode
J1	1/8" miniature phone jack
Q9, Q10	2N4409 transistors
R18	4.7k, ½ W resistor
R19	560k, ½ W resistor
R20	13-Ohm, 1 W resistor
R21	220-Ohm, ½ W resistor
Rly 1	12 V dc, 400-Ohm coil relay with normally-open contacts (Elec-Trol RA30011121 or equivalent)
S1	SPST miniature toggle switch

LETTERS

from page 53

best way for police agencies to trace stolen, lost, or misplaced equipment back to the rightful owner when recovered. I have been waiting for a police officer to write something on the quickest, simplest, and most sure-fire way, but so far I haven't seen anything about the right way to do it. I am no authority on the subject, but I work in the Communications Service of the Texas Department of Public Safety (State Police), and have had some experience trying to trace equipment.

You would be surprised at the amount of electronic equipment gathering dust in the evidence rooms of the police departments across the country because they could never determine who the rightful owner is. Most of it will end up being sold at public auctions after being held for a period of time.

A serial number or social security number is of no use in trying to trace a piece of equipment to its owner. It could probably be done with a serial number if all the sales of the item were recorded, but no police dept. will go to the time or trouble to try tracing anything with the serial number. The only useful purpose of the serial number or social security number is to identify a piece of equipment when and if the owner accidentally comes across it and says, "Hey, that belongs to me." The serial number is also used to enter stolen equipment into the National Law Enforcement Teletype System computer (NLETS).

The best way to identify your equipment is with your driver's license number. In front of your DL number, put the two-letter

Continued on page 59

Evert Fruitman W7RXV
2808 West Rancho Drive
Phoenix AZ 85017

Instant Engraving

—to protect your equipment

It has been shown that those who participate in one of the "operation identification" type of programs are less likely to have their property ripped off, and, for those who still manage to lose things to the midnight suppliers, the chances for recovery are improved if the property has been indelibly marked. Since it isn't always convenient to borrow an engraving tool, here is a simple way to make a throw-it-away marking tool.

This system leaves a rather permanent mark, as may be seen in Photos A, B, and C. It may not be as deep as the one made by an engraver, but it seems to weather quite well.

The main ingredient for

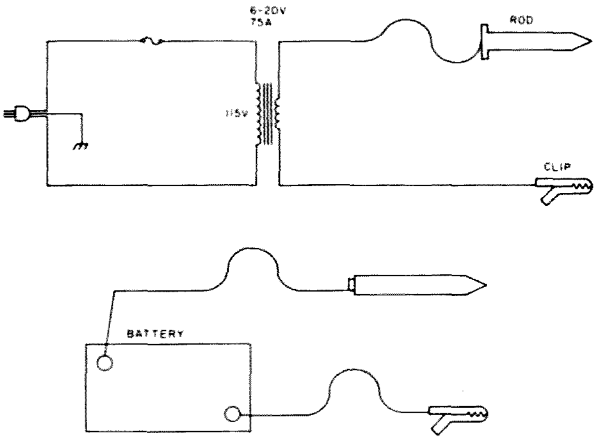

Fig. 1.

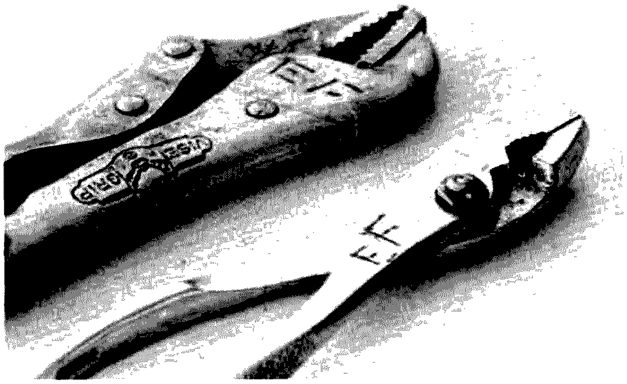

Photo A.

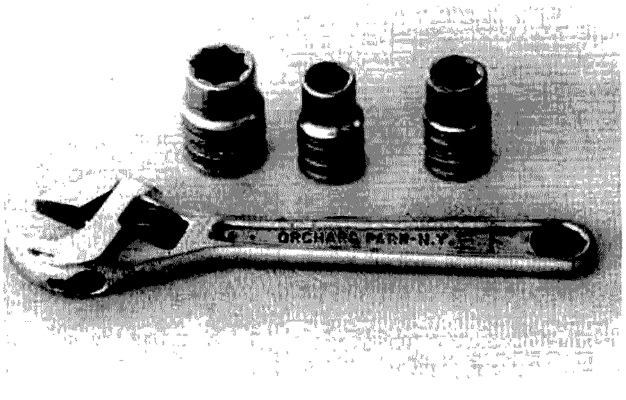

Photo B.

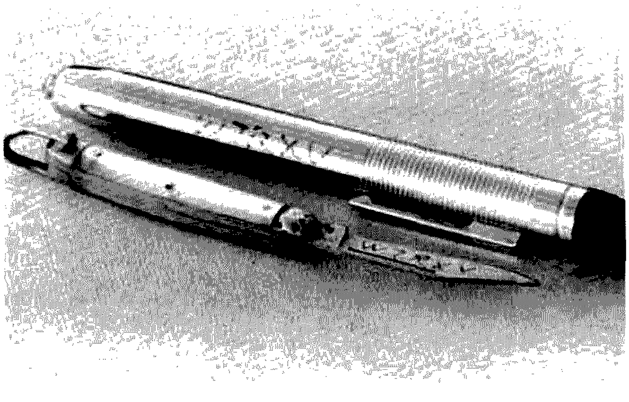

Photo C.

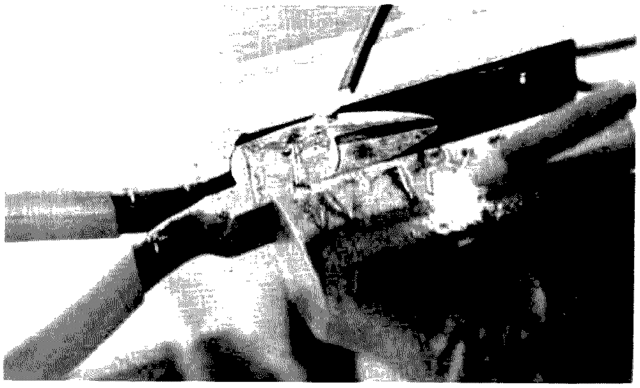

Photo D.

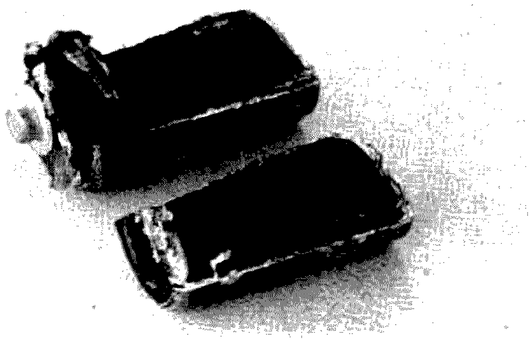

Photo E.

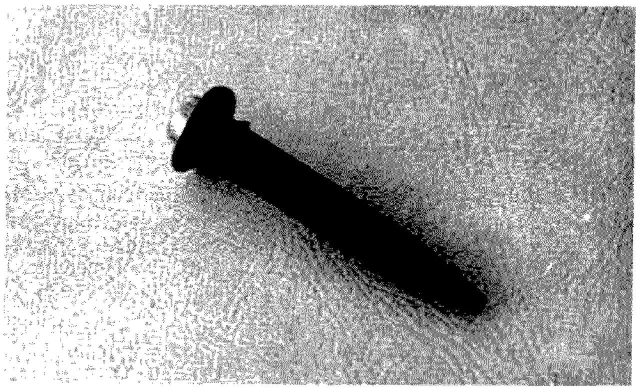

Photo F.

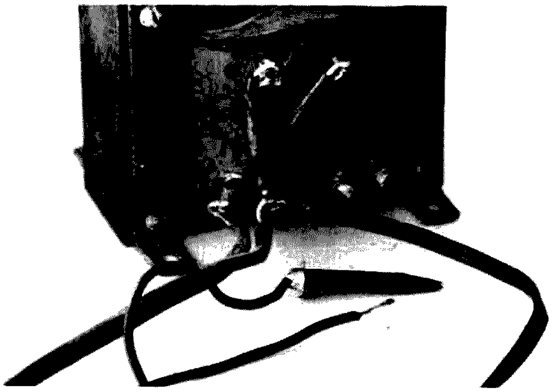

Photo G.

this system is the carbon rod from a used size-D flashlight cell. As Photo E shows, a hacksaw may prove most helpful in removing the rod from its container. After the rod is removed and cleaned up, it is fed into a pencil sharpener. The point should be medium fine. (Note Photo F.)

Reasonably heavy leads are connected to a suitable power source with the other ends connected to the cap on the rod and the item which is to be marked. If the cap becomes detached, the wire may be wrapped around the top of the rod and held in place with pliers while it is being used.

The power source may be either ac or dc. A filament transformer rated at five Amps or more and able to deliver from 6-18 volts would be a suitable power source. If there is a heavy-duty dc supply around the shack, that will work, too. A 12-volt car battery would be nice, but not necessarily convenient. In any case, the voltage should be kept below the point where an arc can be struck and maintained.

Since a small amount of the carbon rod may be oxidized during the marking process, this procedure should be done in a relatively well ventilated area.

Note the glowing rod in Photo D. This gives an idea of what the system looks like in action.

If you are something less than artistically inclined, then you may want to practice making your mark on a piece of scrap material until you get the hang of it.

Fig. 1 gives the diagram for those who are technically inclined. ■

LETTERS

from page 55

abbreviation for your state and the letters DL. Example: TX DL 3193921. It takes about three minutes to trace any person anywhere in the continental United States through his driver's license number, with the use of NLETS, which is a nationwide network of computers that you wouldn't believe. There is one exception: The state of New Mexico requires a person's full name and date of birth before you can get a computer hit on his driver's license. Of course, you should have your current address on your driver's license, which is required by law in most states.

The number should be on the outside of the case as well as the inside. Some of our better police officers don't have the technical ability to take the case off equipment to check inside for identification numbers.

This won't keep your equipment from being stolen, but it will keep it from sitting on a shelf in a back room of some police department because they couldn't determine who the owner is.

Scott McDowell
N5SM/WB5JJN
Amarillo TX

SPEAKING OF QRM

I would like to take friendly exception to WD5HYN's letter (May issue) concerning QRM. In 16 years of operating, I have rarely, if ever, heard deliberate interference to any QSO. I believe that most QRM is a result of propagation anomalies, beam antenna patterns, and other phenomena, including our very crowded bands.

Take, for example, a ham transmitting on the HF bands from New York City with 1000

Continued on page 60

The New, Improved Automatic Thermostat

—adding a night thermostat

James C. French W9YBU
Country School Rd.
Dundee IL 60118

December, 1976, set a low temperature record not matched in the last 96 years. The gas company warns that gas bills may be as much as 45% higher than last year. So, here in the midwest, "An Automatic Thermostat," by George R. Allen W1HCI in the January, 1977, *73*, presented an urgent and immediate project.

I made certain modifications which simplify his system and offer a fail-safe operation.

I used a small timer called a Time-All™ to cut the system over at night to a night thermostat. A 120 V ac relay, SPDT, shorts out the night thermostat during the day.

During daylight hours, the normal thermostat controls the temperature. At night, the night thermostat is put in series with the day thermostat. The night thermostat is set to open when the night temperature has reached, say, 55°. If the thermostats are in series, the night thermostat will set the temperature, since it opens before the "day" thermostat.

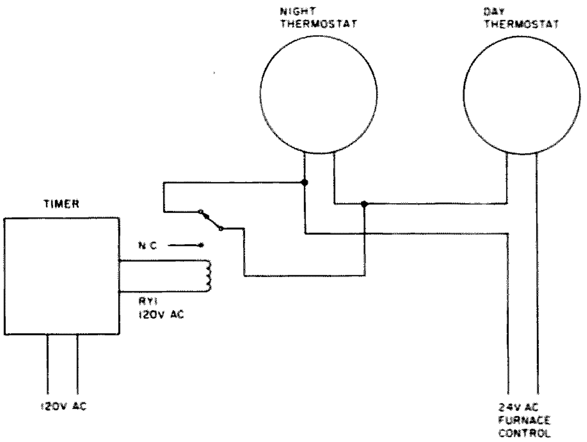

Fig. 1.

During the day, the relay will short out the night thermostat, and it will effectively not be in the circuit.

The night thermostat should be mounted in some area which is removed from the furnace but not affected by drafts or the outside temperature.

The Time-All timer is plugged into any convenient ac outlet. The 120 V ac relay is suitably mounted in a cabinet near the timer. The relay is wired so that, when the timer is off, the relay (de-energized) shorts out the leads to the night thermostat. See Fig. 1. When the timer kicks in, the relay pulls in, and the short is removed from the night thermostat. It then controls the temperature.

Settings for temperature may have to be by the cut-and-try method to achieve the overall house temperature you wish for the night.

The timer has a switch which will defeat its timing function when you wish a warmer temperature late at night or early in the morning. Should the timer fall out of the ac outlet, or should the fuse on that circuit blow, the day thermostat remains in control of the house temperature.

Good sleeping and a reduced heating bill to you. ■

LETTERS

from page 59

Watts and a good tribander aimed at Miami. While a good portion of his signal is being radiated in a 15° fan along the New York-Miami axis, some of that power is also being radiated around the other 345° of arc. Now, let us postulate another ham, say in Seattle, with a beam (or a dipole) aimed at Chicago, in QSO with a W9 with a beam and 250 Watts. The residual signal of the New York City ham may, due to propagation conditions and the fact of higher power, be as strong or stronger in Seattle than the W9's signal, yet, due to the orientation of the New York ham's beam, he will be unable to hear either the Seattle or the Chicago ham! In addition, the Chicago ham, with the beam, will probably hear very little of the New Yorker's signal due to the New York ham being in the deepest part of the null of his beam.

Changing band conditions, particularly during heavy sunspot activity and during dawn and dusk periods on 20, 15, and 10 meters, can also play havoc. Every ham, I'm sure, has had the experience of being in solid QSO with a distant station, and, upon turning it over, has heard nothing or has found himself or herself in the middle of another QSO between two hams in another part of the country (with one of these two complaining about the QRM). A quick study of the propagation characteristics of the HF bands will show that reliable communication (as shown by the Maximum Usable Frequency) is highly dependent upon time of day and the period of the sunspot cycle. This can be worked backwards, too: The usable *distance* of any given *frequency* varies, depending

Continued on page 63

Give 'Em A Break

—with a cheaper repeater beeper

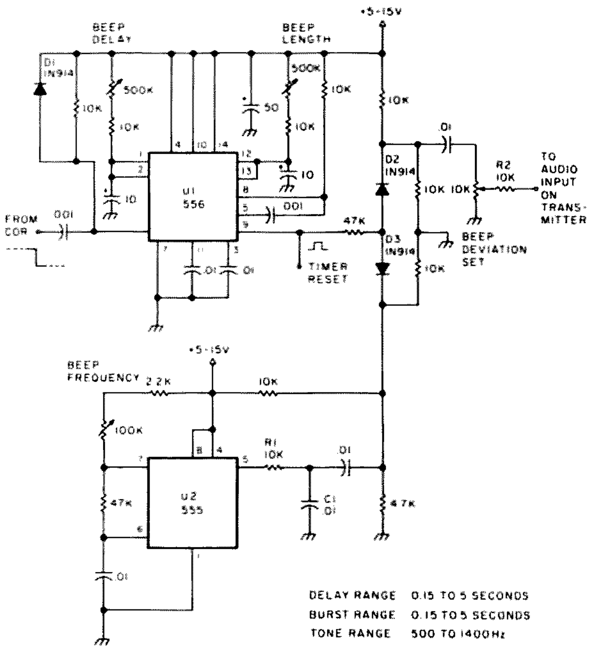

Fig. 1. Beep schematic.

Bob Thornburg WB6JPI
13135 Ventura Boulevard
Studio City CA 91604

Active open repeaters tend to develop a strain of users who acquire the knack of holding a conversation with such enthusiasm that the exchange is so fast, back and forth, that no one can break in. Through the years, repeater designers have attempted to negate this discourteous behavior by providing a short delay between the end of a transmission (squelch tail) and the reset of the time-out timer. This technique requires that the short delay must be observed by the users in order to reset the timer, time out, and preclude being turned off. But the quick-thumbed users still continue to exercise the rapid exchange with a kind of wily second sense as to when to pause to reset the timer. For the guy in the station waiting to break, the random and unpredictable pause is impossible to catch, and, in his frustration, he will probably double with one or the other of the agile button-users. The doubling usually obliterates the audio of both the parties involved and, other than attracting some attention for the breaker, does little for smooth operation.

That's one problem; here is another. Let us assume that your repeater is co-channeled with another somewhat distant repeater. When your repeater drops off, the other is clearly audible. If your delay is short between COR action and carrier drop-off, it is often difficult to distinguish between the end of a conversation on your repeater and conversation on the co-channel repeater. This leads to some pretty humorous statements, but it's not often enough to offset the confusion and resulting inefficiency. The solution is to lengthen the drop-off delay and insure that the squelch tail is clearly noticeable and quite distinctive by the resulting quiet pause.

That's two problems; here's a third. If your repeater indicates reset of the timer by dropping the carrier, then, for an active repeater, the carrier is being switched on/off a huge number of times each day — say it is in use for 15 hours per day and keyed on an average of once per minute. The carrier is switched about 1,000 times per day. This incessant switching is hard on the transmitter and power supply and results in early failure and poor reliability of the associated components.

There exists a simple solution to these problems. First,

set the carrier dropout at about 5 seconds. If the repeater is not in use for five seconds, then it goes away. It perhaps could ID for the last 1-2 seconds of this delay. Second, reset the timer at one-half second after the COR opens, and indicate that the timer has been reset by transmitting a half-second tone. This beep tone clearly indicates to the user that the timer has reset and the one-half second delay between the squelch tail and the tone is ample for breakers to use. For the initial applications, the reset time should be longer — say, one second to "train" the users — but very soon the rhythm of the operation is learned and one-half second has been found to be adequate. The tone should be between 600 and 1000 Hz at about 1-2 kHz deviation.

The beep tone solves the first problem described above by a physiological phenomenon. To not wait for the beep is treated by the users as a cardinal sin. No matter how sloppy operation becomes, it is unthinkable to not wait for the beep. If someone "beats the beep," they are immediately chastised or "educated" by their fellow users. The peer pressure has been very effective, mainly because the beep tone is a clear and unambiguous indicator and to jump the tone is an obviously discourteous act. To continue to fail to wait is clearly an overt and malicious act.

The second problem is solved since the repeater doesn't drop off during a continued conversation. It requires five seconds of no talking to drop off, yet the beep tone allows full and orderly exchange between your users without inadvertent interjections by your co-channel.

The third problem is also solved in that the repeater doesn't drop off nearly as often. Instead of 1,000 times per day, the number is reduced to 30-50 times per day. The reliability is significantly increased, even with the added complexity of the beep circuitry.

Once the above basic beep concept is comprehended, there are several extensions in usefulness that can be discussed. The pitch of the beep is unique to one repeater and quickly identifies to someone who casually tunes in that it is this repeater he has stumbled upon. This uniqueness can be extended by using a chime tone or other clever sound for your "beep." We have one repeater in southern California (WR6AFR) that sounds like a broken watch spring.

Another clever idea is to do away with the squelch tail. We're all used to the sound, but imagine how that blast of noise called a squelch tail must sound to the uninitiated. Present technology allows the repeater to eliminate (without degradation in performance) the squelch tail. But, without a tail, the user doesn't know when to talk. Why not two beeps, one instead of the squelch tail and one at some different pitch on the timer reset. Done right, it would sound like a front-door chime and send casual observers scurrying to answer.

The pinnacle of useful beeps is that of WR6ABN. (See *QST*, May, 1974.) This beep consists of two simultaneous tones. The high tone alone indicates that the previously received signal was high in frequency; the low tone alone indicates that it was low in frequency. Both tones together mean the user was "on channel."

Beeps are not great saviors of all repeater problems. They tend to create problems, too, one of which often overshadows any benefits. We are almost all aware of the user syndrome known as kerchunking. This obnoxious procedure is to continuously key up the dormant repeater just to hear it come on. Now give this astute individual a beep to play with, and he will drive you and other monitoring people batty. Kerchunk-beep, kerchunk-beep, kerchunk-beep, etc., and soon you're ready for a complete rebuild. If the repeater is busy enough, he doesn't have time to play with his new toy and will do other things to entertain himself.

The beep solves some problems, and it creates some new ones. But such is life. At least the new ones are new and different, and maybe this is progress.

Beep Circuit Description

The circuit diagram for a beep generator is shown in Fig. 1. The input signal comes from the COR used to turn on the transmitter. The signal here is before the 5-second time-out timer. A negative-going edge during the squelch tail is satisfactory. The starting level can be almost anything, as long as it goes below 2 volts to start the beep cycle. The diode, D1, will protect the circuitry even for 2-300-volt tube COR levels.

The 556 dual timer, U1, is triggered by the COR. The first section times the delay from COR to beep, and the second section, triggered by the end of the first section timing, generates the beep gate pulse. This pulse enables an analogue gate consisting of D2 and D3. The beep tone is continuously generated by U2 to insure that it won't change frequency during the beep. This also allows some filtering on the tone to remove the sharp corners. This simple filter consists of K1 and C1. The output level can be set by the beep deviation set, and R2 insures the beep circuit will not load the other audio circuitry. The output level of the beep is variable from zero to about 1 volt rms for a 12-volt power supply.

Care should be used in construction to insure that the continuously running tone generator, U2, does not couple into the low-level audio circuitry where it will appear as an annoying tone. ■

LETTERS

from page 60

upon the ionization characteristics of the various layers of the ionosphere.

Finally, it occurs to me that, through no fault of the operator, a well-intentioned ham can listen on a frequency for several minutes before calling CQ, and, hearing nothing, go ahead with his call. This operator, unless he can hear both sides of a QSO, has no way of knowing that there is a 5 wpm QSO going on the frequency between two Novices (or between two rusty oldtimers).

So, let's not be too quick to yell "interference" when our QSOs get clobbered. Ninety-nine plus percent of the time there is no deliberate interference. Chalk it up to experience, use the opportunity to improve your "difficult copy" technique, move up or down a few Hertz, or shut the thing off and go watch the evil eye in the living room until the band opens up.

And, speaking of QRM, did I ever tell you about *my* Novice days, working rockbound on a 7125 kHz rig with a Hallicrafters S-20R Sky Champion with a Q-multiplier . . . ?

Warren S. Kirkland WD0EZO
Security CO

KIM CW

Scanning a bibliography prepared by Wm. Dial, *Micro*, April-May, 1978, I ran across the reference to "Receive CW with a KIM," *73*, Nov., 1977. Having written a send/receive program myself (*Micro*, April-May, 1978), I was interested in the algorithm used by Shattuck and Schmidt.

Continued on page 65

Karl T. Thurber, Jr. W8FX/4
233 Newcastle Lane
Montgomery AL 36117

It's Flora Clock!

—and all is well

One day, while visiting a local supermarket with the XYL, I happened upon an eye-catching display of Rubbermaid "Windowsill Planters" which, I thought, if turned upside down, just might make dandy equipment consolettes for miscellaneous small projects that might not require mounting in regular minibox or other shielded equipment cabinets.

The display I saw featured a variety of sizes, ranging from quite small to full windowsill size, in several different woodgrain colors, including walnut, tan, and green. I selected a walnut unit, 3¼" x 5" x 3" (No. 3451), for experimentation and set to work just the *opposite* way from regular construction practice, i.e., starting with a good-looking box and finding some gadget to build into it to put the little gem to good use!

After a bit of thought as to what was missing or otherwise needed at my operating console, I decided to make use of the planter (after nearly having it usurped for its intended purpose by the XYL) by installing a digital clock "atop" it (when viewed upside down) and installing a small source of 9 V dc (nominal) inside the box to power accessories and to provide a source of power for an LED "blinky."

I turned the planter upside down and installed some very small rubber mounting feet on each corner. The result was a very attractive consolette-type enclosure which would be a convenient housing for this or any similar project, such as calibrators and other applications where shielding isn't important. The flat upper surface of the box (when turned upside down) provides a convenient mounting place for a small LED readout digital clock. I used a Babylon Electronics "Space Age" digital clock, which is a completely self-contained miniature unit featuring a large 4-digit LED display and which comes with its own line cord-type ac transformer. This unit, which uses the popular 5314 clock IC, comes with easy-to-follow instructions and goes together quickly. It is particularly adapatable to ham shack use as it can be set up for either 12- or 24-hour time format. Although it does not display seconds directly, seconds are readable as a specially-coded dot pattern readout between the hours and minutes groups of LED digits. While I built the Babylon unit, a similar clock has recently been introduced by Hobb-Y-Tronix, Inc. (Box 511, Edison NJ 08817), known as the "Super Compact," a unit featuring .4" LEDs, interchangeable 12- or 24-hour format, and an optional temperature-indicating front panel. Either clock should be suitable; in fact, any clock which will fit the 2¼" x 4¼" "table" atop the flower box will do. The clock is simply epoxied into place, and the power cord to the ac transformer is run through a hole drilled in the top of the box.

The inverted flower box proper houses the ac transformer for the clock, the LED blinky kit, a 6 or 9 V dc adapter to power the blinky, an SPST switch for the blinky power, and a miniature phone jack supplying power for any accessories that I may desire to run off the consolette. The ac transformer and dc adapter are epoxied into place inside the box, while the blinky module is supported by the two LEDs protruding through the front of the cabinet.

The blinky kit I selected was the BL-1 "Mini-Kit" sold by Ramsey Electronics, P.O. Box 4072, Rochester NY 14610. The blinky alternately flashes the two LEDs furnished – the flashing rate being determined by the values of C1 and C2 (referring to the manufacturer's instruction sheet). Larger values of C1 and C2 cause the blink rate to decrease, while smaller values will increase the rate. The blinky kit runs off source voltages as high as 20 volts without damage, though a 9 V dc power source was most convenient for me due

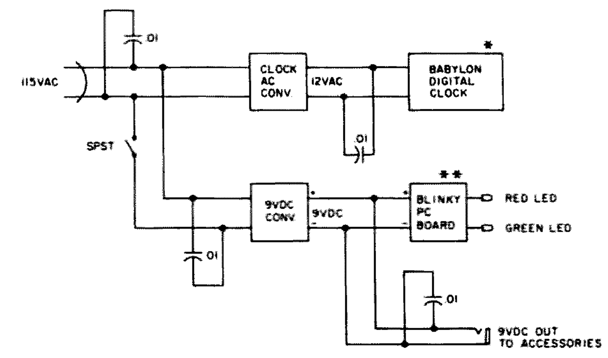

*Fig. 1. Flower-box console. *Babylon "Space Age" digital clock kit or equivalent, such as the Hobb-Y-Tronix "Super Compact" kit with ac transformer. **Ramsey BL-1 blinky module or equivalent (see alternate circuit of Fig. 2).*

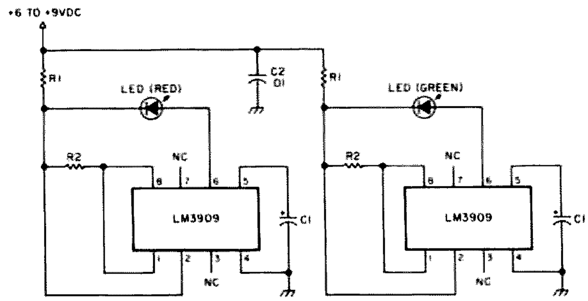

Fig. 2. Alternate home brew blinky module. C1 = 350 uF; R1 = 1000 Ohms, ½ W; R2 = 1500 Ohms, ½ W: all values nominal. Separate LM3909 circuits allow independent flashing.

to the availability of an old (but serviceable) 9 V transistor radio battery eliminator. Substituting a green LED for one of the two red ones furnished with the kit adds a bit of class, and increasing the values of C1 and C2 to about 75 uF slows down the blink rate to a reasonable one with 9 V dc applied. No special precautions are required when building the unit on the PC board supplied, other than the usual necessary care in assembly when dealing with highly miniaturized units. Hobb-Y-Tronix also sells a similar blinky flasher kit which uses a 555 timer and is specifically designed to work off 9 V dc. I used a 100 mA dc adapter, though any 6- or 9-volt unit should work well with either module as only a few mA are required. At the price levels involved (less than $3 for either kit), it hardly pays to make up the PC board for a completely home brew blinky, though the circuit shown in Fig. 2 could be used. Both ac and dc lines should be bypassed with .01 uF disc ceramic capacitors to suppress any floating rf which might seek a home in the digital clock or blinky board. Also, if a hum problem is encountered when running accessories off the unit, try connecting a high-value (500 uF) electrolytic capacitor across the output, observing correct polarity. Whichever blinky circuit is used, the 9-volt power adapter and ac transformer for the digital clock easily fit into the shell of the inverted flower box and can be epoxied into place. Two small holes are drilled in the front of the box to allow the two LEDs to protrude through the front. A hole is drilled in the front for mounting the SPST mini toggle switch, and holes are drilled in the rear of the box to accommodate the accessory miniature phone jack and 115-volt ac power cord. A custom nameplate (which can be made at any nameplate engraving service or at the next local hamfest) indicating the station callsign may be glued to the front panel to complete the installation.

One caution when scrounging a dc adaptor: If accessories are to be powered by the unit, make sure that the adapter used doesn't have one side of the dc output line connected to the ac line. Some of the cheaper imports may and should not be used, as they would present a shock hazard.

While, admittedly, this project started out as little more than a novelty, putting it together was a good deal of fun, and I have found that it is actually quite attractive and draws a good number of compliments. And, best of all, no one has yet guessed that the cabinet is a flower box!

The larger boxes are a bit oversize for typical ham shack applications, but the smaller units such as the one I used have good potential. They are just about right for small construction projects such as clock housings, high-intensity lamp bases, selector switch boxes, and the like. The fibrous composition plastic material is a bit difficult to work with, however, and is not very suitable for intricate drilling and punching. Just keep what you try to install in the boxes simple, and you'll be rewarded with a good-looking finished product certain to add an extra touch of class to the shack. ■

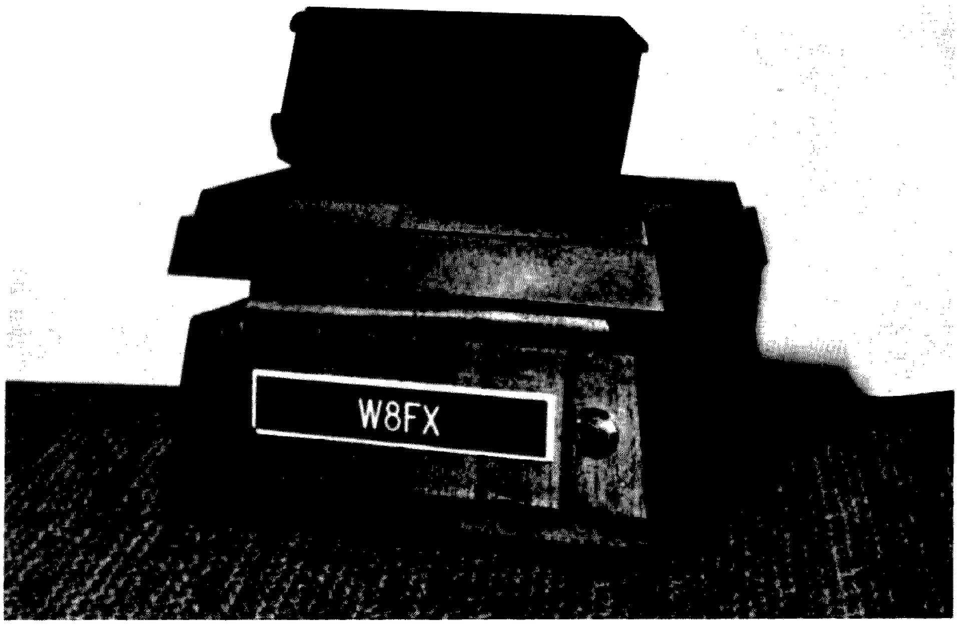

LETTERS

from page 63

There are some fundamental differences between our algorithms. Our dot-dash, element space, character space, and word space decisions seem to be basically the same. However, my program rejects as false any mark elements (key down) less than one-half the dot length, giving additional noise discrimination on the air.

There are a few other points of comparison which I would like to make.

1. They have a wide variety of display formats; my program requires some kind of video module to convert ASCII to a video format and display it on a CRT.

2. My program has greater time resolution for character decisions. Their basic time unit was about 4 ms and mine was 1 ms. This probably makes no difference until excessively high code speeds are reached.

3. They use an automatic calibration routine which tracks variations in code speed. I enter the code speed from the keyboard, and the 7-segment display on the KIM indicates whether the speed is too slow or too fast. In an earlier attempt at a Morse code reader, I found that static crashes tend to foul up auto-cal circuits.

The point in writing this letter, in addition to bringing attention to some possible variations and improvements in CW receive programs, is to suggest that someone with the appropriate equipment try both programs "on the air" and make evaluations and suggestions for improvements. I will be glad to furnish an interested individual with a reprint of my

Continued on page 69

Henry H. Cross W1OOP
111 Bird's Hill Ave.
Needham MA 02192

Build Your Own Digital Dial

—great update for your receiver

Every shack needs a general-coverage receiver, if only to tune down to find where the harmonics are likely to be coming from. If your general-coverage receiver is anything less than an R-390, it needs a digital dial. A readout to even kHz will be a great help, provided the last digit is useful, rather than indecisive.

An article by Jon Hagen in the December, 1972, *QST* told what to do and how to do it (except for how to make LED displays work right), and my unit was based on that, on his personal comments (he talked me into building one), and on a lot of cut and try on my part. Some of the features that I have tried aren't included here, as they are not worth the effort involved. But what is in this article is essential to make a useful display. Albert Ingalls cautioned amateur astronomers "not to make their last telescope first," and, unless you are a digital nut rather than a ham or SWL who needs a digital dial, I suggest keeping things simple. If you want something better, see Jack Regula WA3YGJ's system in the October, 1976, *73* (corrections 5/77) and something similar in the ARRL 1976 *Handbook* as part of a communications receiver. Regula's article uses a multiplexed display with a CMOS driver suitable for common-cathode LED numbers. Mine uses 7447s and common-anode displays, and the two other articles avoid the issue.

The difficult questions involve human engineering (now I need reading glasses for the red numbers at arm's length, but not for green or yellow!), where to put the readout (close to the knob you turn), and how to keep the digital hash in the box and out of the receiver. If the box is put together with a dozen screws or more, the

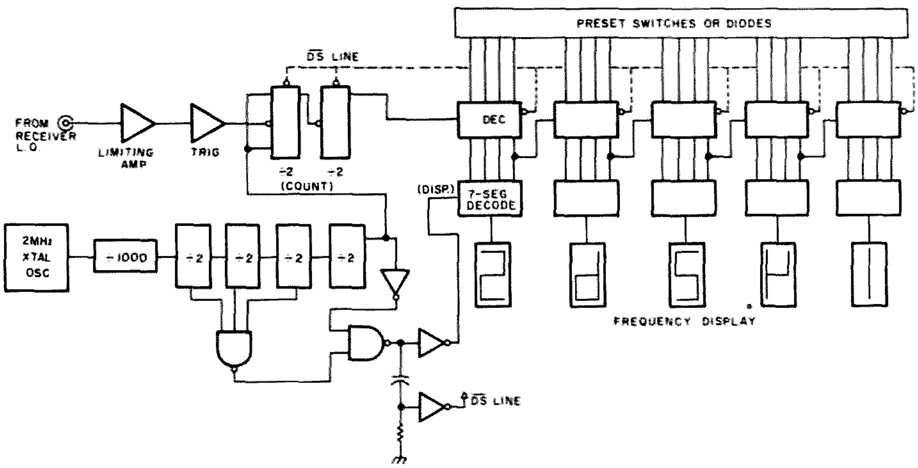

Fig. 1. Digital dial logic diagram. Frequency display is shown from back.

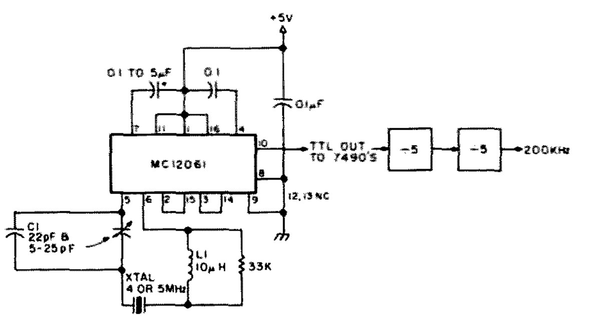

Fig. 2. An IC 5 MHz oscillator (Motorola MC12061). This IC consists of an ECL oscillator, a buffer, and an ECL-TTL converter. If the crystal won't pull to frequency, modify C1 or L1.

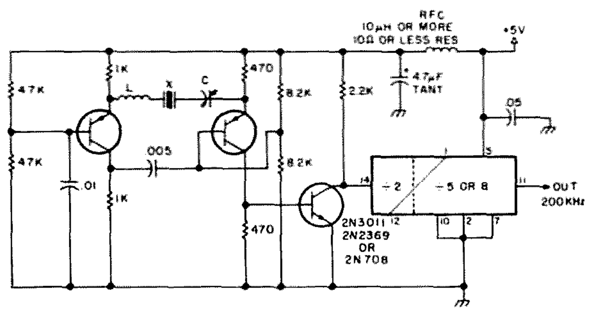

Fig. 3. 2 MHz crystal oscillator. PNPs — 2N3012, 2N3906, 2N4121, and 2N963. For 2 MHz crystal — L = 10 uH, C = ~ 30 pF.

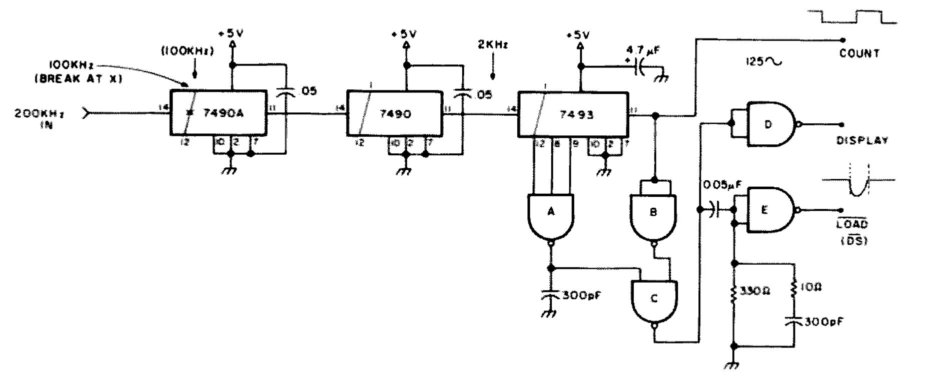

Fig. 4. Sequence generator. A — 1/3 7410; B and C — ¼ 74S00; D and E — 1/3 7410 or ¼ 74S00. One section of 74S00 is used in the input. This is the only place high speed is required. B should be at least as fast as A.

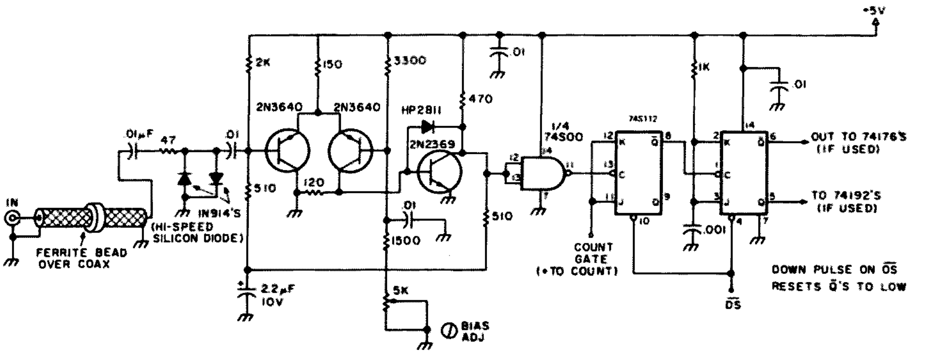

Fig. 5. Input amplifier and ÷4. Count sensitivity: 5 MHz — 2 mV rms to 1 V; 50 MHz — 25 to 40 mV; 70 MHz — 90 to 200 mV. Pins for 74S112: J — 3, 11; K — 2, 12; Q — 5, 9; $\bar{Q}$ — 6, 7; preset — 4, 10; +5 — 16; ground — 8.

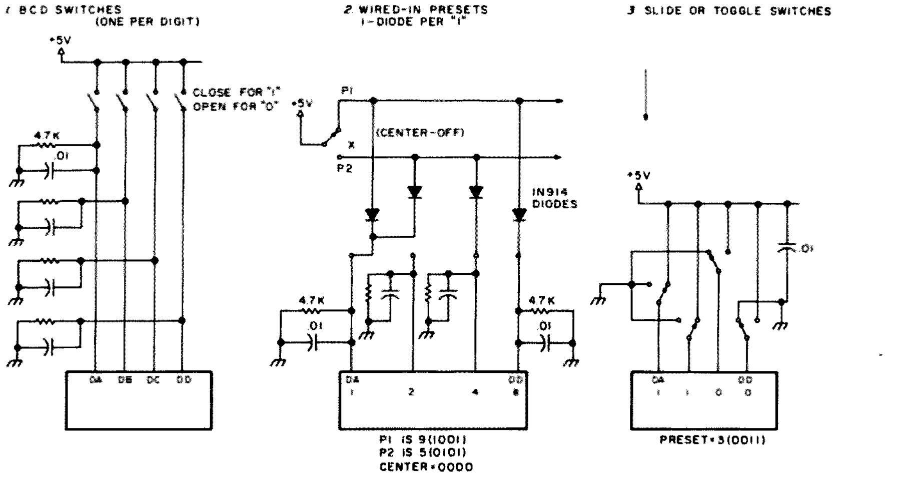

Fig. 6. Preset circuits. Receiver i-f = 454 kHz. Oscillator high — preset to 100,000-454 = 99546. If the oscillator is on the low side on the 12-30 band, then preset is 00454. (That's why there are two "preset" frequencies.)

only way for hash to get out is via the readout window (mine is 0.787 by 3 inches), the input coax, or the ac line. The input amplifiers should be somewhat separate from the rest of the counter, and the lead to them should be coax inside as well as outside the box.

Because the 7447s are not multiplexed, the 7-segment output lines can be bypassed at the LED end with up to .01 uF, if needed. I found that the ac line was what took the effort and I didn't filter the display.

It is important to realize that the dial will read right, even if you have two-dial electrical bandspread or a helipot-and-varicap fine tuning system. Also, as long as you read the LO frequency, the fact that it drifts a few kHz is something not easy to notice. Subjectively, your receiver no longer drifts (how to save $495).

The preset system is similar to that used in the GLB synthesizer (up to 15 diodes per wired-in frequency), and any number can be supplied, or you can use thumbwheel switches, BCD switches, or toggle switches. For my purposes, an SPDT center-off type (as shown) takes care of LO high, LO low, and operation as a straight counter in the "off" position. Experience suggests that the last digit preset might be best brought out to a panel switch, as not every "455" i-f is on that exact frequency.

For antiblink purposes, Hagen used an undisplayed decade. Mine divides by four, so I can use J-K gating and cycle a bit faster (125 blinks per second, rather than 50). No latches are used, although they would be needed if you read down to 100 Hz. Count period is 4 milliseconds, display 3.5 milliseconds, reset takes two microseconds, and the rest of the time is wasted.

Because the preset ("data") inputs are on 0.02 percent of the time only, the input pull-down resistors can be 4.7k or higher, if .01 capacitors are also across the resistors. Thus the preset switch takes only about 15 mA, but the decades will not reset properly if the "preset" down pulse is longer than a few microseconds. If your receiver "tunes backwards" on some ranges, you will need 74192 up/down counters, but, if it's strictly single conversion or has a fixed first i-f, there is a money and power saving from using 74176/8280 up counters. (The 74196, which counts up to 50 MHz and uses more power, can be plugged into the same socket.)

The input string shown takes a tenth volt at the coax

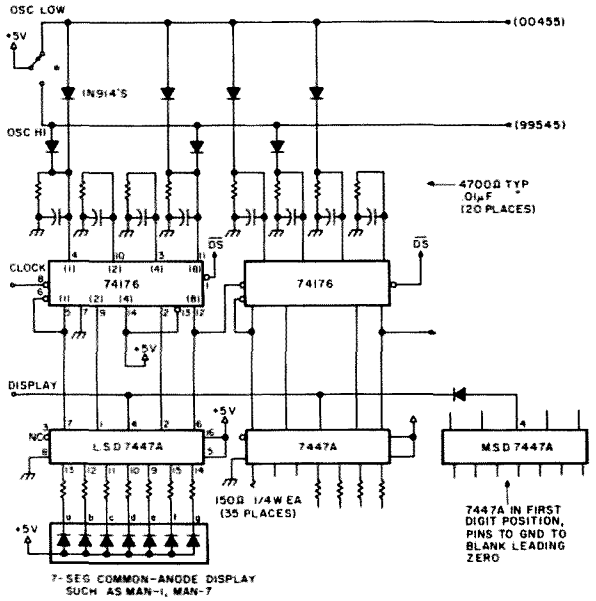

Fig. 7. Up-counter detail.

jack and will count up to about 70 MHz. Getting the signal into the coax should be solved at the receiver end. I use a transformer in the mixer drain lead and have used emitter followers, etc. The coax will only be a few feet long, anyway, so it may not be desirable to terminate it. All those amplifiers hold the signal down when it's strong and also reduce the gating hash that comes out the input (most commercial counters and scopes feed sync or gate pulses back into the circuit you're measuring) and thus into the receiver's signal path. Gating the J-K inputs to the 7S113 (a 74S112 is also okay) is the neatest way to turn a counter on and off, and it wasn't the only way I tried.

Almost any AT-cut crystal will be more stable than a 100 kHz unit and good enough for this. I used 2 MHz, but 1, 1.6, 3.2, 4, 5, or 10 MHz will do (James lists 2, 4, and 5 MHz, for instance). Input to the divider string is shown at 200 kHz, but, by unhooking the first flip-flop and going into pin 1 of the second 7490, 100 kHz can be used. The output of the third 7490 is at 2 kHz into a 7493, which provides the 4-millisecond count gate and drives the sequence gates for display and reset. Remember that the output of the 7493 must go up and down fast enough to gate the highest frequency to be counted. That's why the divider string doesn't have 74L90s or CMOS in it (74LS90s work fine, though).

There are 6 gates in the system if you don't have to switch the 74192s from up to down with a remote signal. At the input, a 74S00 drives the first flip-flop, a three-input gate is needed at the 7493, and a two-input gate is used. I used a 7410, but a 7420 (and the 74S00) would also do the job. Unused gates waste power; unused inputs can be strapped to used inputs with no problems.

The 74S113 is preset each time the decades are loaded, so that the number of counts in before the first pulse out is not a matter of chance (something I forgot the first try).

The three-input gate turns off about 0.1 microseconds before the output of the 7493 changes, so I put the 300 pF capacitor on it to make the waveforms come out right, though it isn't critical to the way things work.

The input amplifier transistors should be very fast digital types. The NPN can be a 2N2368, 2N2369, or 2N3011. If you can't get a Schottky diode (shown as HP2811), don't use a diode there. The PNP pair could be 2N4403s, although 2N3640s/MPS3640s are better. The bias adjustment is set up for best sensitivity at the high end of the receiver's range. I used a signal generator. The 2.2 uF capacitor is important. The transistors in the crystal oscillator can be the same types or 2N3904s and 2N3906s.

To keep the hash at a minimum and inside the box, be sure each IC has a bypass cap across its terminals (0.01 uF or larger) from plus 5 volts to ground so that the gulp of current that it takes when switching comes from a nearby source. Little dipped tantalum caps work okay here. Filter the ac line where it comes into the box, make the power supply and regulator somewhat separate from the rest, and slip ferrite beads on any wires between boards.

I used the power supply I described in *73 Magazine*, February, 1977, p. 41.

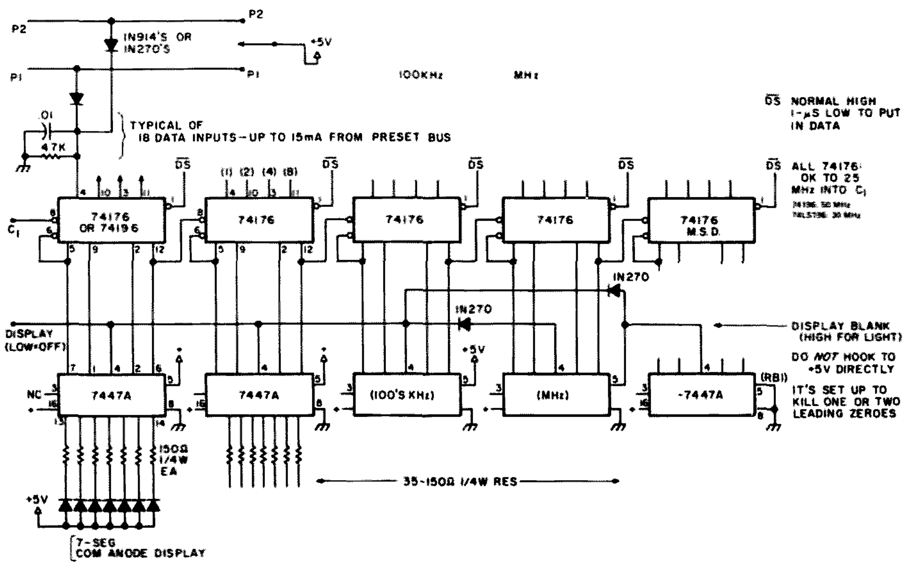

Fig. 8. Preset counter for digital dial (up-count only). 74176s use half as much power as 74192s, count on falling edge. Presets — 00455, 99545, 00915, 99085, 02215, 97785, etc.

Adding Varactor Fine Tuning

If you have a digital receiver frequency readout, adding fine electrical bandspread or incremental tuning becomes more attractive because the readout tells you the actual frequency without the need for adding the readings of two dials. Even some ham-band-only receivers could use a little more vernier action than they have.

To do a neat job of adding a fine tuning dial, I used a ten-turn helipot and a variable capacitance tuning diode. The voltage I had was plus 12.6, so the tuning bias was about 2 to 12. Because the range I wanted was about 25 kHz, the thermal drift of the diode was large enough to

matter at low tuning voltage. The emitter follower is included mostly so that its emitter-base temperature coefficient will buck that of the diode. For better linearity, a series capacitor (value about the same as the diode capacitance at 4 V bias) was used. The middle six turns of the pot give pretty uniform tuning, but things speed up at the ends. Note that there is a load resistor on the pot arm which also affects linearity at the high-voltage end.

The pot and knob (with a digital dial, no turns-counting dial is needed on the pot) can be put in the receiver if the panel has the room and you don't mind drilled holes, but it also can be stuck on outboard (shield it to keep the hum pickup down), with the wires snaked in via a ventilation slot.

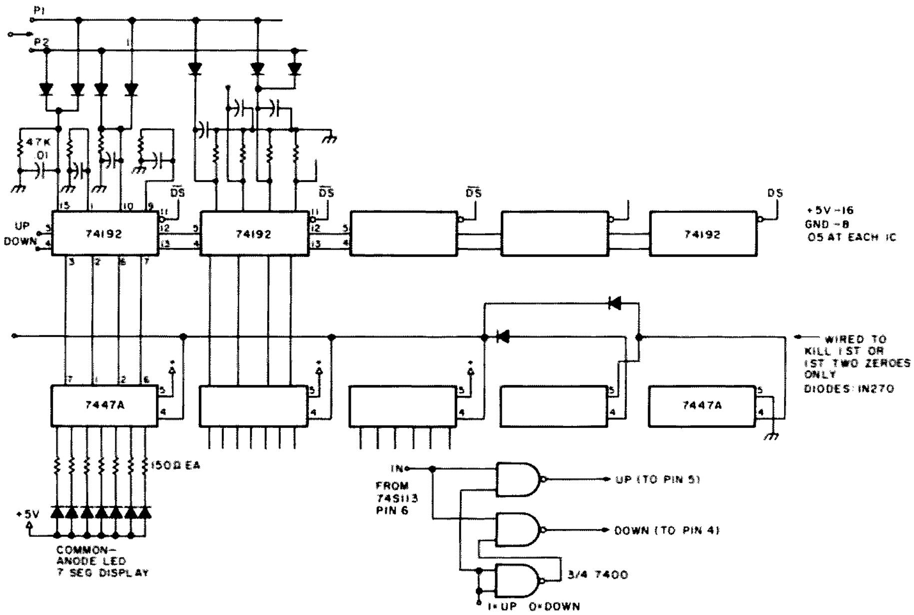

Fig. 9. Up/down counter for digital dial. P1 and P2 draw up to 15 mA. Data inputs to be 20 4.7k resistors and 20 .01 (or larger) capacitors. If up and down functions need to be switched, use a 7400 and take its input from pin 6 of 74S112. If gating isn't used, drive pin 5 or 4 from pin 5 of 74S112 and hook the other one to +5 through 1000 Ohms (don't leave it open).

When that worked, I got carried away and added a search function (i.e., the receiver sweeps back and forth about 25 kHz looking for DX when the band is quiet – it beats tuning by hand). It took an LM301 (I assume a 741 would also work, though maybe not as well), a switch, and the parts shown. For a slower sweep, use a bigger cap. Mylar is suggested, but I had some W5R ceramics. If you don't know why W5R and not Z5U, use paper or mylar and be sure.

If I were doing this to a tube receiver, I would buy or otherwise acquire a 40-volt rated varactor and a 36-volt zener to drop the B plus down to something more stable. The transistor specified will take more voltage, but the IC won't. It will (they say) run on 36 volts or less, as shown. ■

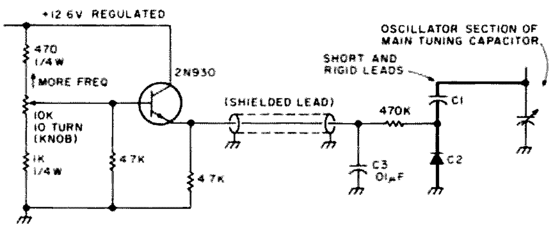

Fig. 10. Fine tuning. C2 – Motorola MV2103 (10 pF at 4 V, 30 V breakdown). C1 – 10 pF silver mica.

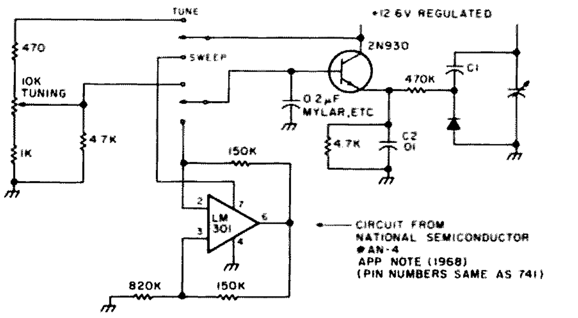

Fig. 11. Parts from James.

LETTERS

from page 65

program.

Marvin L. De Jong K0EI
Point Lookout MO

AID

Just a few words to let you know that your General class code tape and the *General Class Study Guide* proved to be invaluable in helping me to upgrade to General on my first try. The study guide gave me the necessary tools to objectively and intelligently answer all the FCC questions. Although I was not able to copy your 13+ code tape 100%, it nevertheless proved to be an extremely valuable aid.

Needless to say, when I get ready for the Advanced test, I will again use *73*'s study materials. Thank you for these very excellent aids at such modest cost.

Edwin R. Lappi WD4LOO
Carrboro NC

M2WRA

I am writing to inform the readers of *73* about the Mass 2-Way Radio Association (M2WRA), a non-profit organization whose purpose is to encourage those interested in all modes of 2-way radio to work together to raise funds for charitable purposes. We tried this with our 1977 Heart Fund Hamboree, a combination Hamfest and CB Jamboree, but were certainly far less successful than we planned: Instead of making money for the American Heart Association, we lost over $2,000.00 and are still working to eliminate the balance of the debt.

At the present time, we are

Continued on page 73

Karl T. Thurber, Jr. W8FX/4
233 Newcastle Lane
Montgomery AL 36117

The FM Rebroadcaster

—flexibility for the FRG-7

I have acquired a Yaesu FRG-7 synthesized 500 kHz to 30 MHz general-coverage receiver. It fulfills a real need for a good continuous-coverage portable communications monitor and SWL receiver for my shack, supplementing the ham-bands-only coverage of the Tempo 2020 in use at W8FX/4. A dual-purpose accessory that would rebroadcast on the commercial FM band (88-108 MHz) what was received on the FRG-7 (affectionately known as the "Frog-seven"), combined with a code practice oscillator to keep up the code speed on long Air Force TDY (temporary duty) trips, became a highly desirable addition to my station.

I used a small 1" x 1" PC board FM wireless mike kit, available from Ramsey Electronics (P.O. Box 4072, Rochester NY 14610) for $2.95, which, along with a Cordover Model CWM-1 code module obtained from Burstein-Applebee Co. (3199 Mercier St., Kansas City MO 64111), meets this dual requirement.

The FM unit sold by Ramsey runs a mighty 100 mW output, can easily be tuned anywhere in the FM band, and will work off 3 to 9 volts dc. As the code module is designed for low-voltage operation, an old 6 V battery eliminator was scrounged from the junk box. When plugged into the rear of the unit through a miniature phone jack, it provides a convenient source of power for operating both the wireless mike and the CW module. A 3000 uF 16-volt electrolytic across the B+ line provides a high degree of hum suppression often lacking in run-of-the-mill transistor radio battery eliminators. A 9-volt type 2U6 battery can be used as a power source, increasing the value of the series dropping resistor to the CW module, though battery life would be somewhat limited. A 6 to 9 V dc tap-off could be taken from the FRG-7 power supply, but I decided that going into the receiver was undesirable as it would be necessary to drill into the back panel to bring out the B+ wiring to the "Frog" box.

No particular construction precautions need be observed. I mounted a small 1½", 8-Ohm speaker in the bottom of the 3-¼" x 2-3/16" x 4" Radio Shack #250-251 equipment cabinet and epoxied the CW module (a solid-encased unit) to the magnet frame of the speaker. The FM PC board can be mounted to a piece of copper bus bar wire and squeezed into any convenient place in the cabinet. A front-panel mini toggle switch is used as a power ON-OFF switch, and another mini toggle serves to switch between the code practice oscillator and rebroadcaster functions. The rear panel houses a BNC antenna jack, miniature phone jack for dc power input from the 6 V dc battery eliminator (a J. C. Penny model 681-6542 swiped off an old portable which had long since given up the ghost), an audio-level adjust control for the FM unit, and a miniature Amphenol-type mike jack for audio input from the "Frog." The unit works particularly well with this receiver, as the Ramsey unit is designed for medium-to-high impedance input, and the FRG-7 has a medium impedance fixed-level audio output available on the front panel of the receiver. This fixed output is, of course, independent of receiver audio gain settings and therefore does not interfere with regular speaker or headphone operation. The FRG-7 tape output is, however, taken off prior to the audio filtering network, so that switchable audio selectivity is not available to the output feeding the FM rebroadcaster. The audio has also been fed

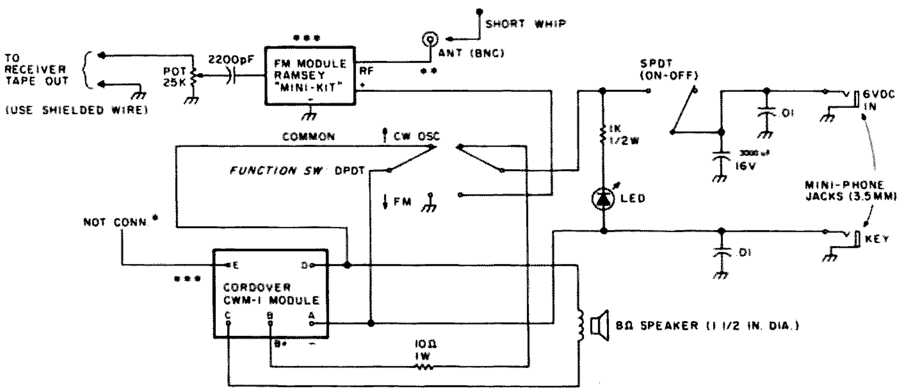

*Fig. 1. FRG-7 "Frog" box. *Used for rf pickup if the unit is to be used as an on-the-air rf-actuated monitor (not used in this project). **If connecting a short whip causes the unit to "pull" frequency excessively or to stop oscillating, insert a small-value capacitor in series with the antenna lead, or make a "gizmo" coupling on a few turns of insulated hookup wire and inductively couple. ***Refer to manufacturer's instructions for proper PC board/module connections.*

through an Autek QF-1 filter to the rebroadcaster with excellent results.

The CW module (obtained from Burstein-Applebee but also available from Poly Paks and others) is actually both a code practice oscillator and rf-actuated CW monitor, but I have not been able to obtain reliable results when trying to use the unit as a true on-the-air monitor. On-the-air CW monitoring is best obtained by use of a keyer relay, having the key actuate a relay which keys both the transmitter and the FRG-7 box simultaneously.

While others may have better luck in getting the rf function of the CW module to work, I've found from experience that getting dependable results from direct rf-actuated keying monitors is very difficult — performance usually varies considerably from band to band and depends also on such factors as power input, antenna loading, swr, and amount of rf floating around the shack. It's best to go to indirect monitoring for consistent results. The use of the FM unit is fairly straightforward. Once a short (10" to 20") antenna is fabricated from a length of bus bar or an old walkie-talkie whip and a BNC connector, the unit is adjusted simply by tuning a nearby FM receiver to a clear spot anywhere in the 88 to 108 MHz region and adjusting coil L1 of the FM unit (Fig. 1) until a strong, clear signal is received on the FM receiver. Of course, the frequency should be selected so as to not interfere with local FM stations (no need to induce further BCI problems). One should note that the antenna affects the transmitter output frequency, and, therefore, close movement next to it should be avoided. The little unit should easily transmit up to 300' or more, depending on location and length of the antenna hooked to the BNC output. It has been used for various purposes at W8FX/4, both in conjunction with a pair of lightweight FM cordless radio earphones and for general receiver monitoring while puttering around the house and yard. The tone of the CW module is dependent on the voltage applied; it is designed to operate with a nominal 1 to 1½ V dc power source (penlite cell), but will work well and produce a considerably louder and cleaner sound with a slightly higher voltage applied. The value of the dropping resistor in the 6-volt dc line (Fig. 1) will determine both the level of audio output and tone of the oscillator. Under no circumstances should more than 4 or 5 volts be applied to the module, as damage may result. A miniature phone jack installed on the rear panel provides a convenient key jack for code practice use, and a front-panel-mounted LED is wired so as to flash with CW keying when the unit is used as a code oscillator and to glow steadily when the unit is used in the FM

rebroadcast mode, indicating that the unit is radiating.

Be sure that the dc adapter scrounged to power the unit isn't one of the cheapies with one lead of the dc output connected to one side of the ac line. Use of such a unit would present hum and grounding-out problems, not to mention the shock hazard involved.

I have found the FRG-7 "Frog" box to be a very handy device, and, of course, it can be used with other receivers not having a tape output by either connecting to the high side of the receiver's volume control (the preferred way), or by simply bridging across the low impedance headphone or speaker output of the receiver (at the risk of distortion due to impedance mismatching and/or overdriving). Also, although I didn't do it, the unit can be wired so that both the FM rebroadcaster and CW module are activated at the same time with audio from the CW module output also routed to the audio input of the rebroadcaster for group code practice sessions through individual portable FM receivers.

One further cost-effective tip for those who may construct the "Frog" box: If you intend to use it with a set of FM headphones for cord-free work, get a high-quality unit (such as one made by Archer or Panasonic) and install a mini phone jack on the headset so that it can also be fed audio directly from the receiver for use as an ordinary pair of headphones, eliminating the need for another set of headphones around the shack.

For an extra bit of class, use gray and black Dymo™ Label Maker strips for both front and rear panel labeling. As can be seen in the photo, both ¼" and 3/8" size strips are used for nomenclature. ■

LETTERS

from page 69

organizing a road rally and possibly another small event in August, and we are publishing a rapidly expanding newsletter. As newsletter editor, I am trying to recruit new members and subscribers.

Although our group is not yet in the same ranks as the ARRL, and our newsletter has a *few* more issues to go before we can compete with *73*, our newsletter does offer many features not found in other publications.

The newsletter, published monthly, offers several pages of coming events listings, in addition to a list of many 2-way radio clubs' regular meeting dates, and general information about various happenings in the two-way radio world. We are very much interested in knowing about other groups' meeting dates and events, including hamfests, flea markets, auctions, or field days.

At the present time, we have more CB members than hams, but we do not feel that it is fair to categorize the association as strictly a CB or ham group—we are neither. We are certainly in need of members of all kinds, and certainly could not complain if we had more ham members to help out on the many technical aspects of radio, and in fund-raising events.

The present membership rates are $10.00 (1st year only) and $7.00 renewal, and additional members at the same house $7 plus $4 per year renewal. Newsletter subscription only is $4 per year (single copy 35¢ plus postage). Copies of our by-laws and constitution are included in the membership, or are available for $1.00.

Anyone with any information for the newsletter or the Mass 2-Way Radio Assiociation is en-

Continued on page 75

J. B. Fields III WB7SZC
344 W. Court
Weiser ID 83672

J. B. Fields, Radioman

—now it's the Navy's turn

All of us who read *73* are united by a common interest — amateur radio, of course. I have not been a ham for long, but I have had much valuable and enjoyable experience in the Philippines as a volunteer operator (MARS). As soon as I get back to the states . . . well, we'll see!

Amateur radio is getting more sophisticated every day. High quality receivers, microcomputers, and heaven knows what next are all combining to expand the horizons — for those who have the bucks.

Money is the universal problem here, or, rather, a lack of it is. How do we alleviate this problem? Usually the answer is work, and this means time away from our favorite pastime — amateur radio.

What I propose, therefore, is a way to spend more time with our hobby and earn money at the same time. Well, the law prohibits us from doing that, but there is a second best answer — a career in communications.

If this sounds like I'm trying to recruit you, perhaps I am, but it isn't as if someone is paying me to. Let me point out the recent article about Merchant Marine radio officers, or "sparks,"* as a description of one fine example of a hobby-related occupation. Let me also inform you that the State of California has openings for telecommunications specialists (particularly those with experience in UHF), and other states likely have similar needs. All you have to do is contact your state employment agency. Most nonmilitary employers will require that you hold a Second Class FCC ticket, but after the amateur tests . . . well, we should all be fairly adept at passing the candyman's exams. Right?

Maybe you don't feel very confident about passing the Second Class exam, or perhaps that twenty plus code business shakes you up. What next? Just what I've been leading up to — submarines.

Notice, I did not say "the military" or even "the Navy," though one of these may be an answer and, perhaps, be the right one for you. I am talking about what I think is the best all-around answer for the amateur today: the job of a radioman aboard a submarine.

In this article you are not going to read any new performance data, any technical information, or even very much about submarine communications. If that is what you want to know, go see a Navy recruiter, sign up for subs, and, once you are doing the job, somebody may have the courtesy to explain to you what it is you're doing. The purpose of this article is to be entertaining and informative about how to pay for our hobby by doing something we like.

What is it you like most about your hobby? Do you like to have the latest in equipment? Do you enjoy troubleshooting and repairing electronic equipment? Or do you prefer operating the equipment or sitting on a net? Let me tell you about Hog Heaven.

Sign up in the Navy, but make sure you are guaranteed RM "A" school. Recruiters are pretty sharp cookies, and they may have other places they need people more. If you stick to your guns, the recruiter will take you sooner or later to fill a quota, even if he has to guarantee you RM school.

Next, you breeze through boot camp — you're good at copying a message the first time around, and, if you're on your toes, this skill will whisk you right through boot camp.

RM "A" school is just another formality, but make sure you volunteer for submarines when you fill out your dream sheet. Once you've volunteered, there will be all kinds of instructors in the school who served in submarines and who will help see to it that you get there.

Next is Morse code school. If you can already copy thirteen, you may have a bit of fun here — get in a huff with an instructor, and wind up by betting him that you will be copying thirteen within a week. Upon graduation, you will be copying 22 wpm without even thinking about it.

Now you're getting closer to the Second Class FCC ticket. There can be even more help with the technical side of it, if you play your cards right.

After code school, there's sub school. That's four weeks of elbow-bending exercises in New London, Connecticut, and, after that, your first boat. Ask them, beg them, or even twist their arms, but make sure you get to the Radioman Electricity and Electronics school to get heavy on theory!

So far there haven't been any surprise tests — a few weekly quizzes and whatnot, but nothing like the FCC exams. Everything you need to know is presented so that you understand it. All you have to do is remember.

Now you are ready for that Second Class exam. Take it. You only have two years left in the service, and it will open doors for you later in civilian life. In the meantime, you are going to see some interesting times in the submarine service.

My first boat was the *USS Barb* (SSN-596), a nuclear-powered, fast attack class boat, home ported in Pearl Harbor, Hawaii! I was excited to see my orders, for the *Barb* had only recently made headlines by rescuing the crew of a downed B-52 in the middle of a hurricane. Here is the story as I later learned it . . .

Barb, en route to the position of the downed aircraft, was traveling at a depth of 120 feet. The force of the storm suddenly became sufficient to actually suck the *Barb* right to the surface! Once on the surface, all hell broke loose. The towering waves and gale winds caused the *Barb* to take rolls of up to *60 degrees* from side to side. The first roll was to starboard and caught everyone by sur-

*"See the World and Get Paid!", Gerald J. Hargett, *73 Magazine*, November, 1976, December, 1976.

prise. All the men sleeping in bunks on the port side of our single passageway were thrown out of their racks and onto the deck. As the rudely awakened sleepers greeted the day with appropriate remarks and tried to stand up on the heaving deck, the boat suddenly rolled to port, throwing all the remaining sleepers in starboard bunks atop the first group. Quite a tangle it was!

Meanwhile, back in the galley, Freddy, our salty head cook, could be heard invoking all the spirits of heaven and earth in his frantic attempt to keep dinner on the stove. The crew could visualize the beans pouring into the mashed potatoes. As if this were not enough, the ship was nosed into the waves to reduce the rolling, but the scramble continued. As the bow climbed skyward in the face of a mountainous wave, Freddy's cherry pies and sizzling roasts smartly departed the oven on a voyage aft across the mess decks. But, living up to his reputation, Freddy got it all together for an excellent meal.

The bridge was manned. Only the stoutest could survive the waves that engulfed the boat. The job of lookout fell to Richard Spaulding, a giant of a man, who until now was satisfied looking after our nuclear propulsion system. He held on, as time and time again waves nearing a hundred feet high broke over the bridge and tried to tear him away. All we had to direct us now was the helmsman's ability to interpolate the swinging compass in an effort to stay on course. But luck was with us: Richard spotted the liferafts between two swells. He fired a lifeline to the aircrew, but they were too exhausted to grab it. So, to cap the whole event off, the chief torpedoman, TMCS Hentz, lashed a line around his own waist and swam through the seas to reach them. On the first attempt, they timed it correctly. Chief Hentz successfully negotiated the seas and managed to tie the line fast to the liferafts.

Of the entire aircrew, only one man was lost to the sea. The bombardier was perhaps the most exceptional of the crew. He had managed to tie himself into one of the liferafts and, amazingly, caught a few moments of sleep while the storm raged around him!

Needless to say, I was anxious to join these men when I saw my orders. I flew to Pearl Harbor to meet the *Barb*, but she was still at sea. So I spent a month working for Submarine Flotilla Five and vacationing on Waikiki Beach. Then, early one morning, I was roused out of the rack and told to pack my seabag and report to the airport for a flight to Guam to meet the *Barb*.

The next twelve months were filled with "submarine qualifications" – tracing pipes and wires, and learning everything about the boat. At the end of this period of study, I went through a series of exams with my shipmates, the ship's engineer, the executive officer (XO – second in command) and finally with the captain, who pinned on the coveted dolphins – happy day!

Now, three years since reporting to the *Barb*, I'm stationed aboard the *USS Grayback* (SS-574). The *Grayback* is an amphibious assult submarine, home ported in Subic Bay, Republic of the Philippines. The story is the same – good friends, good chow, good pay, and terrific liberty in foreign ports such as Pusan in Korea, Yokosuka in Japan, Hong Kong, Kelung and Kaosuing in the Republic of China, and Singapore.

Recently, the *Grayback* completed a trip around the Philippines, called the 1976 "Bayanihan" Cruise. Bayanihan is a Philippine word meaning "helping hand." Our mission was one of good will; we distributed school books and medical supplies in six Philippine cities we visited. With the help of the American and Philippine Special Warfare Teams (Seals and UDT), we blasted out two coral beds to help construct a new pier and deepen a shipping channel. During the Bayanihan Cruise we visited several unusual ports. Some of the people had never before seen Americans. We were greeted like great explorers and heroes in every port, with an ensemble of parties, dancing, and fun! Think it was all fun? During the trip we gave over twelve thousand people their first tour aboard a submarine. That was the hard part!

Submarine life entails a lot of hard work but yields a commensurate amount of pleasure. A side benefit of duty aboard submarines is the close relationship between the officers and the crew. The wardroom is as elite a group among officers as the crew is among other Navy enlisted men. The submariner gets to watch from a ringside seat some of our nation's dynamic leaders. I, for one, have developed a considerable appreciation for the job they do.

The submarine Navy is referred to as "The Silent Service." This is because we seldom talk about our jobs. Qualified members of the crew are trained to perform the jobs of any other crew member, with the exception of the radioman. The radioman's knowledge is shared, at times, with only the captain himself. If you are an outsider, you will be welcome as a guest aboard for a tour in port, but your questions will be met either with a pat answer that reveals nothing or, if you persist, silence. Communications spaces are strictly off limits, so, if you want to learn more, don't ask questions – join us, and be a member of an exclusive organization. ■

LETTERS

from page 73

couraged to contact us.

Mark J. Welch
***M2WRA Newsletter* Editor**
PO Box 203
Northborough MA 01532
(617)-366-1266

BREAKING 80

On page 98 of your February, 1978, issue of *73*, you published a very good project article by Walt Patterson WB6LQE on conversion of a CB rig to 10 meters. I had a Publicom I on hand, unused, and decided to try out the conversion.

I am so inept, and such a rotten technician, that I really had no hope of success. My storage area is replete with unworkable ham magazine projects, mute testimony to such and other deficiencies best left unmentioned. Some of them have been costly failures.

So I went ahead with Walt's plan, ordering the required crystals, with high hopes. I might say that his directions were simple and crystal clear (no reference to the electronic crystals, because two came bad and had to be remanufactured, which Cal Crystal Lab cheerfully took care of at no further expense to me). If you play golf, you will remember how you start off 18 holes of cow-pasture polo with the firm belief that you are going to break 80, only to drag up to the clubhouse with a score closer to 180! That parallels my experience on ham radio build-it-yourself projects.

This time, however, I broke 80! The little rig took off like a wild banshee, with 4 Watts output, after I realigned the receiver rf and mixer coils and the five transmitter coils. On my *first* 10 meter QRP CQ call, I

Continued on page 77

Steven K. Prescott K0KDT/5
Rt. 2, Box 342-X2
Campbell Road
Las Cruces NM 88001

Counter Accuracy For Perfectionists

—updating the K2OAW counter updates

With measurement getting more precise and with the occasional availability of crystal ovens and other stable oscillator devices for clocks, the gain of another digit of precision on a counter can be desirable. Such can be the case for the K2OAW counter in the series of articles which started in May, 1972, in *73 Magazine*. If you think you have a very stable clock in your counter, so all kinds of numbers displayed aren't just random digits to impress the unaware counter believer, try this. (Refer to Fig. 1.)

Further inspired by an article by W4CUG (March, 1974, *73 Magazine*), where 62 MHz was achieved on the "barefoot" (low frequency) input, I decided to do the same for direct measurement of 6 meters to the nearest cycle. The project started just for fun. With the substitution of a 74S04 (for IC1) at the output of the (new and improved) 5 V dc MPF102, an HEP S0020 input amplifier in place of the regular 7404, and then a 74S00 (for IC2) in the input selector circuit in place of the regular 7400, the stage was set for speed. The 7473 input divide-by-two gate was replaced with a 74H73. Measurements were made to almost 45 MHz. As a 74S73 could not be found at the time, a 74S112 similar type dual JK was inserted with minor rewiring (with the count enable and reset A all used just as before) – and, lo and behold, a marginal 65 MHz was counted. (See Fig. 2.)

Having done what W4CUG had reported before, my objective became: Just how fast will the thing go with simple modifications? I scrounged a couple of 74196 chips and installed them in the IC6 position, which is a divide-by-five (this is the least significant digit BCD coder). I found that these two 74196s running divide-by-fives were not as fast as a carefully selected 7490, which was there in the first place.

A 74S196 opened a whole new world, however. Incidentally, don't forget to change the reset line to the chip from B to A, or it won't even open a gate! When the thing was turned on, it promptly leaped to above 90 MHz, but slowly fell to 80 and then 70 MHz. Careful checking found the 74S04 (IC1) to be quite hot when, and only when, switching fast. Another 74S04 did the same thing. A 15 Ohm 1 Watt resistor was placed in the Vcc line to this chip, dropping the voltage to 4.1 to 4.2 (this value was carefully chosen by testing for maximum count). When turned on, the counter leaped to 107 MHz and settled to 100 to 101 MHz, with very stable count. Heat sinking the 74S04 with epoxy to a piece of 1/8-inch aluminum allowed a stable count to 105

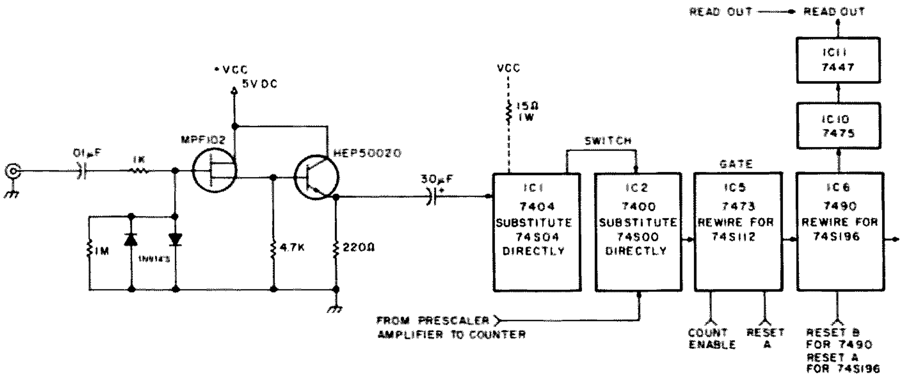

Fig. 1. This is the standard improved type input circuit. It uses an FET and a regular transistor with no odd voltages. The TTL interfacing is achieved with a 7404 type chip. This arrangement is very sensitive. The rest of the chips in this counter front end are shown as they relate to this article.

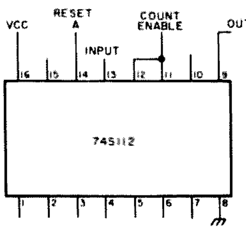

Fig. 2. This is how I wired in the 74S12 to replace the 7473 chip in the divide-by-two input gating circuit. There are two JK flip-flops in this chip — only one is used. This is an essential substitution for high speed counting.

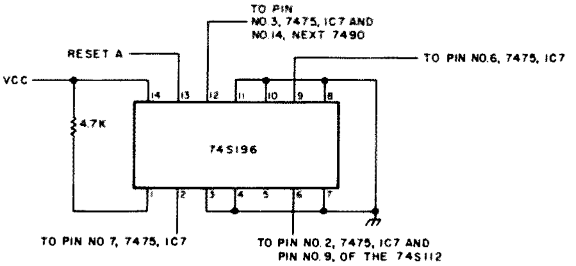

Fig. 3. This is how I hooked up a 74S196 to substitute in the IC6 position for the 7490. This is necessary to divide by five at a rate of better than 50 MHz. Note that the gating stage before (IC5) divides by two, which gives a total of divide by ten at the first readout, allowing counting to the nearest Hz.

MHz. (See Fig. 3.) This substitution of a 74S196 for the 7490 (least significant digit position) is for IC6 only.

There is some question as to whether 125 MHz can be reached or not. My counter was hand wired on 1/10 inch perfboard (which is just as fast as redoing some of the older available boards for all the new changes) and, at 105 MHz, some critical positioning of parts was noted. The 74S04 seems to be the weakest link in the chain, and a 74S00 in a different configuration was tried but fell just short of 100 MHz. A grid dip meter with inductive coupling was used for a high frequency signal source.

Why the speed? Simple. With an 11C90 chip (available at a nominal price of about $16.00), one can go to 600+ MHz and to the nearest 10 Hz! The 11C90 is internally biased, so there isn't the fooling around of the old 95H90 circuits that involves tuning them up. Don't forget that your clock needs 10^{-8} accuracy to claim that all those little lights mean more than a beer sign. (See Fig. 4.) Direct soldering of the 11C90 prescaler chip to a PC board is recommended. In and out should be short coax, and jump pins 4 and 5 to 12 and 13 with a .01 uF capacitor with very *short* leads. Surround everything with ground (gives good connection for 1, 2, 6, 12, 13, 14, to ground) on the PC board. I then enclosed the 11C90 in a metal box of soldered copper. Be very careful not to overload this chip with 150 MHz to 450 MHz rf. It can be destroyed as the input diode protection is poor at these frequencies.

The 11C90 was purchased from Tri-Tek, Inc.[1] The 74S00 for 30¢ ('76 catalog only), 74S04 for 35¢, 74S112 for 75¢, and 74S196 for $4.00 ('77 catalog only) were all purchased from James Electronics.[2] Delivery was under seven days from both places.

If one is critical in chip

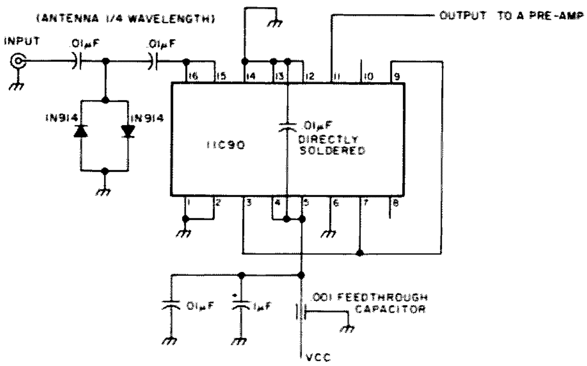

Fig. 4. This standard circuit will divide by ten to over 600 MHz (cheaply). With a second 5 V dc amplifier, as shown in the counter front end (Fig. 1), after this chip, the counter will *count a Wilson handie-talkie at over 20 feet! Note that there are no chokes, coils, input bias circuits, etc. Do not overload this chip with rf.*

selection (some are noisy, switch slowly, work better at different voltages, etc.), good results will follow. A 74S73 substitute for the 7473 in the IC5 position was found *not* to work much faster (I may have run into some bad chips). Even a slow scope will tell a good chip from a bad one by examining activity on various pins. The low frequency counting is affected by all this to some extent. At 120 Hz and lower, the Vcc resistor on the 74S04 in IC1 position must be bypassed. It will then go to about 40 Hz, but is not exactly stable, i.e., is plus or minus 2-3 Hz. Substituting the old 7404 back in IC1 gives good stability to 50 Hz. Much slower counting than this you can do yourself!

If you're worried about messing up a PC board, don't be. Lead length is not critical (short of 6 inches to a foot), so the chips (74S196 and 74S112) can be "hung in the air" above the board and wired up easily with short leads. I have carefully checked each of these chip substitutions repeatedly to make sure my findings are not just a fluke. Anyone trying these four chip substitutions should have good results. So count 'em, but count 'em fast. Maybe someone will come up with a "barefoot" ECL counter that will reach two meters to the nearest cycle . . . someday — but simply and cheaply? We really need that last Hz anyway! ■

References

[1]Tri-Tek, Inc., 6522 N. 43rd Ave., Glendale AZ 85301.

[2]James Electronics, 1021 Howard Ave., San Carlos CA 94070.

LETTERS

from page 75

was answered by another ham in Grimsby, Ontario, who gave me a 5 x 8, then another station in Sharon, Pa., who gave me a 5 x 9 plus 20, followed by another 5 x 8 from Springfield, Ohio, and a 5 x 7 from Canton, Ohio. Astonishing and fun, to say the least. I think Walt WB6LQE should get much credit for letting us know. I can't help but wonder if he could come up with another simple fix to get this rig on SSB!

One caution: Keep in mind the warning to not try to monkey with the coils locked in with wax. I tried it with coil 301 and succeeded in destroying the core. I had to scrounge around for a substitute—my only difficulty. Thanks for a lot of fun. This afternoon, I found a couple of CB stations on this rig on ten meters, and they got off the air fast when I told them they were illegally on the ham band.

Mike Simpson W6CRD
Long Beach CA

PANTS DOWN?

From the April issue of *73*, page 6, under "The Yellow Peril," I quote: "The most basic truth of international trade is that if we want to sell our equipment in Japan, we have to let them sell theirs here." Later on you say, "And if you don't think they are buying American ham gear in Japan, you just haven't talked to many Japanese hams."

Well, Wayne, for once I've caught you with your pants down. You obviously haven't done your research, for you fail to mention that we tax imports into the States at better than 5% to 15%, and place no re-

Continued on page 79

Robert C. Ghormley K0BV
932 S. Comet Ave.
Panama City FL 32401

The New Op Amps

—*better, lower cost*

A new breed of operational amplifier has appeared which has advanced the state of the art significantly and again put former "mil spec" devices within the realm of common amateur application. Until now, common operational amplifiers (741, 709, etc.) have been fabricated using only bipolar technology. At least three manufacturers, Texas Instruments, RCA, and National Semiconductor, have now introduced operational amplifiers with both field effect and bipolar transistors fabricated on a single monolithic chip. (National's process uses JFETs, while RCA uses PMOS transistors.) This has resulted in a relatively inexpensive, moderately fast operational amplifier with super low bias currents and an almost immeasurably high input resistance.

First, a word about bias currents, offset voltage, and input impedance (this all assumes at least a passing familiarity with operational amplifiers to begin with, which you probably have or you wouldn't have read this far), and then a sketchy comparison of the industry standard, the 741, and the new BI-FET (National) and BIMOS (RCA) devices.

Basic operational amplifier theory assumes that the two operational amplifier inputs have an infinite resistance, i.e., no electrons flow into these terminals. In truth, all operational amplifiers (at least any that I've ever heard about) have some finite input resistance and some finite current, called bias current, into these input terminals. The average of these two currents, one into each input, is called "input bias current." Spec sheets normally list this input bias current as both a maximum allowable at 25° C. and as a max. over the full temperature range of the device, the latter current being higher by a factor of 3 or 4. The *difference* in the actual bias current into each input of the operational amplifier is termed the "input offset current." Again, the maximum input offset current is specified at both 25° C. and over the full guaranteed operating temperature range.

The current which sneaks into those input terminals obviously must come from somewhere. I have yet to find this current source discussed specifically, but the universal implication is that *any* source will do. Any dc-coupled source which is connected in any way to either input of the operational amplifier will act to contribute to this bias current. To illustrate, check Fig. 1(a), a voltage follower configuration. The bias current for the inverting input is supplied by the operational amplifier output; that for the noninverting input is supplied by the V_{in} source. Fig. 1(b) illustrates a differential amplifier with four bias cur-

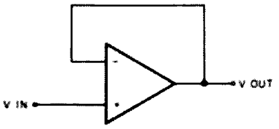

Fig. 1(a).

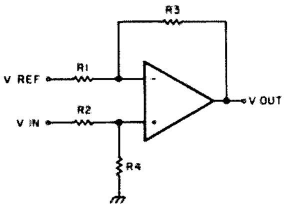

Fig. 1(b).

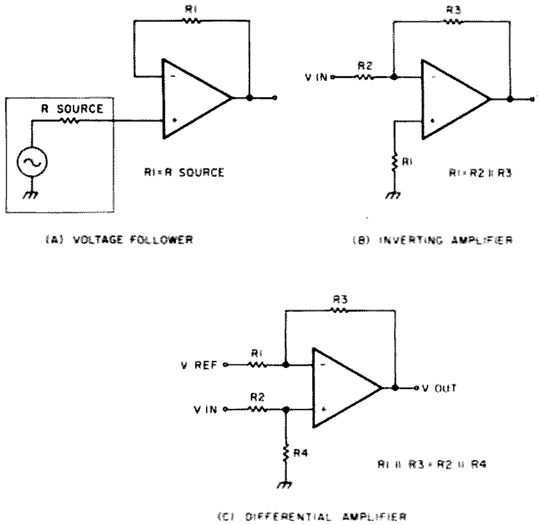

Fig. 2. Bias current compensation.

	741C[7]	CA3140[6]	LF356[7]	Units
Input offset voltage	6	5	10	mV
Input offset current	2×10^5	0.1	50	picoamps
Input bias current	5×10^5	2	200	picoamps
Input resistance	0.3	10^9	10^6	megohms
Slew Rate	0.5	7	12*	volts/us
Gain — bandwidth	1*	3.7	5*	MHz
Supply Current	2.8	1.6	10	mA

*Table 1. * = typical value; others are worst case.*

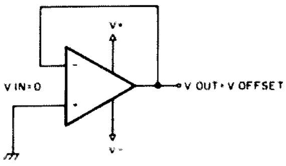

Fig. 3. Follower offset.

rent sources. The inverting input receives current from the operational amplifier output through R3, and from the V_{ref} supply through R1, while the noninverting input receives bias current from ground through R4 and from the V_{in} supply through R2. So much for the bias current sources. I should also point out that bias currents and input impedances are not directly related. The bias currents are drawn by constant current sources in the operational amplifier, and will be present no matter how large the external impedances which may be connected to the operational amplifier inputs. The input resistance is the resistance between the two input terminals of the operational amplifier. I don't pay much attention to this when designing operational amplifier circuits, since it only affects circuit gain if the external resistances used are much larger than this input resistance.[3] Even with a 741, keeping external resistors to 100k or less will allow you to neglect its influence.

To compensate for input bias currents, design in such a way as to present an equal resistance to each operational amplifier input terminal. Note the examples in Fig. 2.

By forcing the input bias currents into each input to pass through equivalent resistance values, equal voltage drops are produced at each input, and errors introduced will be minimal. Note that we cannot compensate for the input offset current, as we don't know which input terminal will have the larger current.

The third parameter of interest here is "offset voltage" or "input offset voltage," which is defined as that voltage which must be applied between the input terminals to obtain zero output voltage.[1] What this means to us is that with a circuit as shown in Fig. 3, a unity-gain voltage follower, connecting the input to ground will produce an output equal to the offset voltage.[2]

In most voltage follower applications (gain = 1), this offset voltage is probably negligible. The catch is this: The offset voltage *multiplied by the gain of the circuit* is the error voltage appearing at the output of the operational amplifier[4]; thus, a 741 operational amplifier with an offset voltage of 5 mV and a gain of 20 would exhibit an output 0.1 V (100 mV) different than that calculated for an assumed perfect operational amplifier. Fortunately, offset null terminals (and various circuit configurations[5]) are available to null out, or remove, the effects of input offset voltage.

Table 1 compares the 741, CA3140 (RCA), and LF356 (National). Texas Instruments also makes the LF356, with apparently the same specs. All data listed is valid at 25° C.; these devices are the commercial- or consumer-grade products. The LF356 is available as an LF356, LF356A, LF256, LF156, and LF156A, with ever-tightening specs. The CA3140 likewise ascends to CA3140A, and then CA3140B. Package style for the CA3140 is 8-lead TO-5 can only; a T-suffix specifies a common 8-lead can, but an S-suffix specifies leads which have been formed to match a mini-DIP socket. National's LF356N comes in a mini-DIP plastic package, while the LF356N is packaged in an 8-lead can. From the data in the table, the RCA device appears to be a bit slower than the LF356, but otherwise looks like a better choice. Two further points concerning selection: The minimum supply voltage (single-ended) for the CA3140 is 4 volts, but the LF356 is not recommended for operation at less than ± 5 V. The CA3140 is a steal at $1.10 (from Tri-Tek). The LF356N is available from National distributors at $3.75 in singles. Last comment: An RCA dope sheet is available free from RCA (see reference 6). National's linear data book (see reference 7) is available from Tri-Tek (as is RCA's dope sheet, for $0.60). ■

References

[1] Underwood, Robert K., ***New Design Techniques for FET Operational Amplifiers***, National Semiconductor Application Note AN-63, March, 1972.

[2] RCA Corporation, "Integrated-Circuit Operational Amplifiers," published in RCA's 1975 databook, ***Linear Integrated Circuits: Application Notes***, SSD-202C, page 191.

[3] Texas Instruments, Inc., ***Linear and Interface Circuits Applications***, 1974, page 8.

[4] ***Ibid.***, page 9.

[5] Dobkin, Robert C., ***Universal Balancing Techniques***, National Semiconductor Linear Brief LB-9, August, 1969.

[6] RCA Corporation, file number 957, April, 1976.

[7] National Semiconductor, ***Linear Data Book***, 1976.

LETTERS

from page 77

strictions when such goods offer heavy competition to American-made products. But what I believe is unknown to you is that the Japanese tax American goods 45% to 55%. And when goods that even with this stiff tax on them threaten domestic production, they are promptly banned from Japan.

A fine example of this is the new Atlas 210X which I recently purchased. The stateside price for my radio, from a local dealer, was $850. The same radio in Japan was a little over $1300. And this is wholesale in both countries.

Another example is the ban on American leather products that, even with the tax, offered competition to the domestic leather production. Thus, a quick ban was enacted.

Oh sure, in time, things will balance out as you have pointed out. But, in the meantime, what about the value of the American dollar and the Americans out of work because of all the imports that almost kill American production?

But the biggest thing that bothers me is the unfairness of the entire thing. I'm all for international trade as long as it's done in a fair matter. But the one-sided trade agreements that are now practiced are certainly not fair to American producers.

Personally, I'm for higher import taxes until the offending nations lower their import taxes to allow American-made goods to compete fairly. If they don't, that's alright, too, for American businesses will grow and prosper. And to do my part, from now on I'm buying American-made goods!

George Cochran
Cherry Point NC

Continued on page 85

Karl T. Thurber, Jr. W8FX/4
233 Newcastle Lane
Montgomery AL 36117

22 Remote

—outside programming for your IC-22S

The Icom 22S has proved to be one of the most versatile FM transceivers around today and is, indeed, becoming even more so by virtue of being the subject of many customizing modifications, particularly with respect to its substantial programming capabilities.

A previous article in *73 Magazine* ("The New 88 Channel IC-22," Jan., 1977) describes a unique means of extending the programming capabilities of the 22S using only two toggle switches. Not wanting to reprogram the board (a tedious, tricky job) and not wishing to drill into the case to mount the two switches, I decided to leave the board programmed for the 22 most popular repeater and simplex frequency channels likely to be encountered. I would use the unused 23rd channel strip on the matrix board for an outboard programmer, building eight individual diode selector switches into a remote box.

In the IC-22S, channels are selected by switching in one of 22 (or 23, if you count the unused channel strip) preprogrammed diode matrices. The diodes are normally soldered into position on each channel strip according to a chart furnished by the manufacturer. Depending on the base frequency desired, from one to eight diodes can be cut into the synthesizer circuit, as shown in the matrix arrangement of Fig. 1.

To remotely program the IC-22S, the programmer described in this article can be built with very little effort or special technique. How-

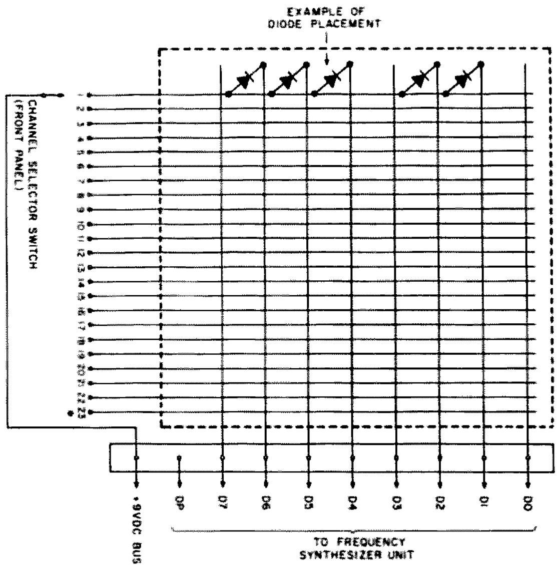

*Fig. 1. Diode matrix arrangement. *Connection added from channel selector switch to matrix board.*

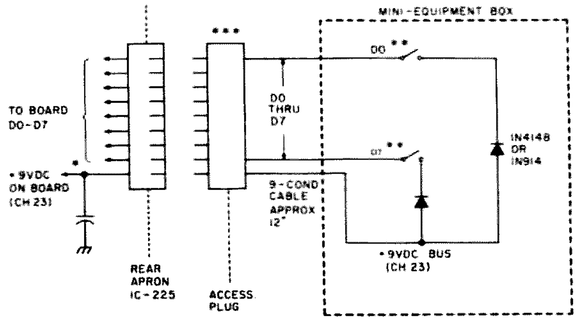

*Fig. 2. Remote programmer circuit. *Each pin bypassed to ground with .01 uF disc ceramic capacitor. **Only D0 and D7 switches and diodes are shown. D1 through D6 are wired in the same manner using the +9 V dc bus from channel 23 line on board as common. Total of eight SPST toggle switches required. ***Changing to a 24-pin connector set (plug and socket) would allow enough connections for a zero-center discriminator meter and TT pad, in a somewhat larger minibox. The meter would use connections already brought to the rear apron: TT audio across mike input and TT dc from any convenient point.*

ever, running the internal wiring must be done with extreme care because of the compactness of the unit and the delicacy of the matrix PC board. (I am speaking from experience, having carelessly damaged the board in the initial programming process.)

To set up the Icom for remote programming, first run a wire from the unused 23rd position on the rotary channel selector switch carrying the +9 V dc bus to the channel 23 line on the matrix board. This position, though unnumbered on the dial selector switch, appears as the first dot past channel 22. Making this connection energizes the 23rd-channel matrix bank. Then, using 9-conductor cable (unshielded is okay), run wiring from D0, through D7 and the +9 V dc bus, to the nine-pin connector on the rear apron. (The present wiring to the connector, a ground lead on pin 8 and a discriminator takeoff on pin 1, should be disconnected.) Each pin should be bypassed to ground using a nominal .01 uF disc ceramic capacitor.

A 12" length of 9-conductor cable can be connected to the 9-pin accessory plug supplied with the unit and run to a small equipment cabinet (Radio Shack #270-251 or equivalent). There, a bank of eight 1N4148 or 1N914 diodes can be switched in or out of the circuit using eight SPST mini toggle switches, as shown in Fig. 2. (If SPDT toggles are available, the unused position provides a convenient mounting post for one end of the diode.) Although the diodes could be mounted to the board, you'll probably have fewer problems mounting them in the box on the switches.

I take the remote programmer along in my mobile installation only when traveling to an area which has a repeater combination pair or oddball simplex channel not already programmed into one of the regular 22

*Fig. 3. Remote programming. Frequency versus diode placement. *Switch position numbers are keyed to numbers shown in the programmer photograph.*

SWITCH POSITION*†		8	7	6	5	4	3	2	1
Frequency	Total 'N'	D7	D6	D5	D4	D3	D2	D1	D0
146.010	108		x	x		x	x		
146.025	109		x	x		x	x		x
146.040	110		x	x		x	x	x	
146.055	111		x	x		x	x	x	x
146.070	112		x	x	x				
146.085	113		x	x	x				x
146.100	114		x	x	x			x	
146.115	115		x	x	x			x	x
146.130	116		x	x	x		x		
146.145	117		x	x	x		x		x
146.160	118		x	x	x		x	x	
146.175	119		x	x	x		x	x	x
146.190	120		x	x	x	x			
146.203	121		x	x	x	x			x
146.220	122		x	x	x	x		x	
146.235	123		x	x	x	x		x	x
146.250	124		x	x	x	x	x		
146.265	125		x	x	x	x	x		x
146.280	126		x	x	x	x	x	x	
146.295	127		x	x	x	x	x	x	x
146.310	128	x							
146.325	129	x							x
146.340	130	x						x	
146.355	131	x						x	x
146.370	132	x					x		
146.380	133	x					x		x
146.400	134	x					x	x	
146.415	135	x					x	x	x
146.430	136	x				x			
146.445	137	x				x			x
146.460	138	x				x		x	
146.475	139	x				x		x	x
146.490	140	x				x	x		
146.505	141	x				x	x		x
146.520	142	x				x	x	x	
146.535	143	x				x	x	x	x
146.550	144	x			x				
146.565	145	x			x				x
146.580	146	x			x			x	
146.595	147	x			x			x	x
146.610	148	x			x		x		
146.625	149	x			x		x		x
146.640	150	x			x		x	x	
146.655	151	x			x		x	x	x
146.670	152	x			x	x			
146.685	153	x			x	x			x
146.700	154	x			x	x		x	
146.715	155	x			x	x		x	x
146.730	156	x			x	x	x		
146.745	157	x			x	x	x		x
146.760	158	x			x	x	x	x	
146.775	159	x			x	x	x	x	x
146.790	160	x		x					
146.805	161	x		x					x
146.820	162	x		x				x	
146.835	163	x		x				x	x
146.850	164	x		x			x		
146.865	165	x		x			x		x
146.880	166	x		x			x	x	
146.895	167	x		x			x	x	x
146.910	168	x		x		x			
146.925	169	x		x		x			x
146.940	170	x		x		x		x	
146.955	171	x		x		x		x	x
146.970	172	x		x		x	x		
146.985	173	x		x		x	x		x
147.000	174	x		x		x	x	x	
147.015	175	x		x		x	x	x	x
147.030	176	x		x	x				
147.045	177	x		x	x				x
147.060	178	x		x	x			x	

Continued.

147.105	181	x		x	x		x		x
147.120	182	x		x	x		x	x	
147.135	183	x		x	x		x	x	x
147.150	184	x		x	x	x			
147.165	185	x		x	x	x			x
147.180	186	x		x	x	x		x	
147.195	187	x		x	x	x		x	x
147.210	188	x		x	x	x	x		
147.225	189	x		x	x	x	x		x
147.240	190	x		x	x	x	x	x	
147.255	191	x		x	x	x	x	x	x
147.270	192	x	x						
147.285	193	x	x						x
147.300	194	x	x					x	
147.315	195	x	x					x	x
147.330	196	x	x				x		
147.345	197	x	x				x		x
147.360	198	x	x				x	x	
147.375	199	x	x				x	x	x
147.390	200	x	x			x			
147.405	201	x	x			x			x
147.420	202	x	x			x		x	
147.435	203	x	x			x		x	x
147.450	204	x	x			x	x		
147.465	205	x	x			x	x		x
147.480	206	x	x			x	x	x	
147.495	207	x	x			x	x	x	x
147.510	208	x	x		x				
147.525	209	x	x		x				x
147.540	210	x	x		x			x	
147.555	211	x	x		x			x	x
147.570	212	x	x		x		x		
147.585	213	x	x		x		x		x
147.600	214	x	x		x		x	x	
147.615	215	x	x		x		x	x	x
147.630	216	x	x		x	x			
147.645	217	x	x		x	x			x
147.660	218	x	x		x	x		x	
147.675	219	x	x		x	x		x	x
147.690	220	x	x		x	x	x		
147.705	221	x	x		x	x	x		x
147.720	222	x	x		x	x	x	x	
147.735	223	x	x		x	x	x	x	x
147.750	224	x	x	x					
147.765	225	x	x	x					x
147.780	226	x	x	x				x	
147.795	227	x	x	x				x	x
147.810	228	x	x	x			x		
147.825	229	x	x	x			x		x
147.840	230	x	x	x			x	x	
147.855	231	x	x	x			x	x	x
147.870	232	x	x	x		x			
147.885	233	x	x	x		x			x
147.900	234	x	x	x		x		x	
147.915	235	x	x	x		x		x	x
147.930	236	x	x	x		x	x		
147.945	237	x	x	x		x	x		x
147.960	238	x	x	x		x	x	x	
147.975	239	x	x	x		x	x	x	x
147.990	240	x	x	x	x				

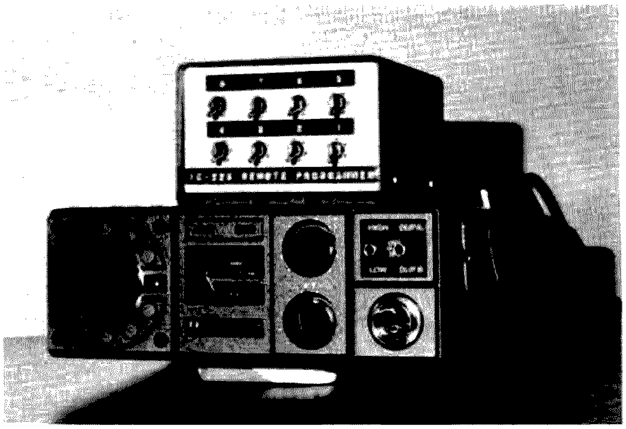

channels. A few strong magnets are epoxied to the bottom of the mini equipment cabinet (in lieu of the rubber mounting feet) to allow the unit to be firmly attached to the Icom when mobiling. For convenience, the manufacturer's "D0" through "D7" matrix board designations are relabeled simply 1 through 8 and marked as such on the box, as indicated in Fig. 3. A small 3" x 5" card is made up showing which switches are to be switched on (diode in) for each desired base frequency. Any 15 or 30 kHz channel can be programmed from 146 to 148 MHz. Actually, frequencies well into the 145 MHz region can be programmed if time is taken to do the binary calculations required. Of course, only standard 600 kHz channel spacing is possible without further modification of the unit's innards. The duplex/simplex switch is normal with the remote programmer selecting the base frequency, as in the case of internal channelizing.

The remote programmer adds considerable flexibility to an already exceptionally versatile two meter transceiver and is well worth the small added cost – and it requires no defacing of the cabinet. At trade-in time (1999?), the 22S can easily be restored to its original configuration.

Another variation of the "no irreversible mods" policy that I adhere to, to protect the unit's trade-in value, involves obtaining an extra matrix board from Icom (for \$3), a few dozen extra 1N4148/1N914 diodes, and a rotary selector switch (23-channel CB type?). The auxiliary board can be permanently programmed for an additional 22 or 23 channels, mounted in a mini equipment cabinet, and wired into the channel 23 unused switch position, as indicated previously. A near ultimate low-cost programmer would combine both the auxiliary board and the eight selector switches into a single programmer box (slightly larger, such as Radio Shack #270-252 or equivalent) for 44-channel preprogrammed capability, plus the added flexibility of all-channel programming when required. Such a combination would be particularly useful in the northeast or in southern California, where there are more repeater channels in use than most rigs can conveniently handle. ■

Robert Villastrigo K5GNZ
309 Irvington
San Antonio TX 78209

Handling Ole George

—*is amateur radio ready?*

The newspaper classified ad was explicit . . .

For sale: Ham radio Novice station – transmitter, receiver, PS . . . $150.00.

End of ad.

The equipment consisted of an AF-68 transmitter, a PMR-8 receiver with matching power supply, and all manuals. The Dow Key relay and speaker were not included, but, for a cash deal to a really sincere amateur enthusiast, they would be included for the original asking price.

The calls I received were numerous. Ten percent were from knowledgable amateurs trying to make a deal for the power supply and receiver. A number were from people who wanted the transmitter. Several callers wanted to know the output and whether or not the transmitter would work on the CB band.

And then "Ole George" called. George didn't know what he wanted. George is not a kid. He is a forty-nine-year-old grandfather who teaches for a living. He has operated illegally on the CB band for the past two years, or, I should say, operated *out of* the CB band, with a few more Watts than the legal power limits on SSB.

It was a short introductory conversation over the phone, a brief description of the coverage of the units and their condition, followed by an invitation to come and look at the merchandise. The invitation was accepted. Ole George proved to be a perfect example of many who are attempting to make the transition to amateur radio from the ranks of the great unknowing. He had never talked to an amateur, did not know one, and had never opened a book to learn what ham radio was all about. I gave him a brief rundown of a general nature on what a Novice needs to know – easy (?) ways to learn code, the five-word Novice requirement, information needed to pass a Novice test – and I answered his questions:

"What bands are open to a Novice?

"What number is that on the dial?

"What can I use for an antenna?

"Can I use the same antenna that I use on CB?

"Can I throw away my CB license after I get my amateur license and still operate CB legally?"

And on and on and on . . .

At the end of our three-hour discussion, I had successfully sold an excellent Novice and standby rig to someone I thought might someday wind up as a good working amateur.

One question kept popping up during our discussion:

"Would the expensive Citizens Band antenna that is positioned over my (George's) house work with the AF-68 transmitter?"

I told him that, with a few slight modifications, it would work on a ham band of higher frequency.

George's overwhelming desire to learn about amateur radio was inspiring, except for the constant referrals to the operation of the units he was about to buy.

"Could they be operated on CB or ten meters? How?"

These questions were interspersed with:

"I have been studying the code for some time now. I'll pay you to teach me on a regular basis. I'll do anything you ask; just help me get a Novice license."

Now, my technical ability is limited to the extent that I have a tough time maintaining my own personal equipment, but I am also of the belief that a Novice doesn't have to be a wizard in electronics to get a license. However, the applicant should have the ability and desire to learn the technical side of amateur radio after he gets his Novice license. That's where the largest number of newcomers are discouraged. It's difficult to find classes designed to teach the Novice how to increase his technical skills.

George's apparent sincerity to become an amateur led me to the kitchen table and a pad and pencil. This would be my first attempt at setting up a simple lesson or routine to follow in order to obtain a Novice license. I even found the old schematic of a one-tube (6L6) crystal-controlled 40 meter transmitter that I had built on a plastic sandwich box. I powered it from my receiver and spent two weeks trying to make it work. I didn't have anyone to help me in technical matters.

In my ignorance, I was so busy trying to get on the air that I forgot how to listen to a receiver. After a few slow movements of the radio dial, I discovered my sandwich box was getting answers from a distance of a thousand miles or more. I had been so intent on transmitting that the basics of operating a receiver were forgotten. I even went as far as building three separate sandwich boxes, thinking that none were working. It would be interesting to see how many Novices can open one of the new 250-Watt transceivers, work on the vfo, or tear down and rebuild the transmitter if it suddenly goes "whacko!"

My second thoughts lingered on a "quicky" application of an antenna that would work with almost any-

thing. I settled on my favorite, a 15 meter dipole. Its 22-foot length is applicable to most houses without extra devices for installation. My first Novice station used a similar antenna. Again, without proper supervision, I installed the antenna about eight inches above the roof, which is not exactly a good practice if you want the most effective power from your transmitter. But I did work 37 states and four countries before someone told me I should raise the antenna away from the rooftop. I never have.

I soon realized that a person could get carried away in trying to cram too much material into one lesson. Rules and regulations and a run-through of standard operating procedures on the Novice bands were the next step. All this must go on while practicing code.

I got another phone call from Ole George. Still enthusiastic, he informed me that he would soon be by with the money for the Novice rig.

Meanwhile, I had decided that I wasn't a teacher after all, and I proceeded to tell George that I would help all I could, but I would not program instructions on how to become an amateur radio operator. I suddenly realized that amateur radio is dealing with a different breed of individuals who are attempting to become hams. I am referring to the thousands of CBers who want more than CB has to offer. And I was not prepared to deal with them.

No longer are the majority of applicants thirteen-, fourteen-, or fifteen-year-olds studying for the thrill of getting on the air and throwing the big switch to communicate through the magic medium of radio. A majority of this age group who normally would have been lured into the amateur radio service entered the world of communication with 60-100 milliwatt transceivers received Christmas morning and used to play scenes from Star Trek. The thrill of two-way radio is no longer an incentive to become an amateur.

Individual incentives have changed, as has the age group. Basic training is apparently going to have to be more preliminary than ever. The standard prepared Novice material may be too advanced for many. Ole George's education in communication indicated that a lot more is needed than studying for a Novice test to insure proper operation on the amateur frequencies.

One publication reported recently that each month as many as 30,000 new Novices were joining the ranks of amateur radio. Growth and numbers were the most important factors mentioned, not how qualified the numbers were.

I got another phone call from Ole George. I listened to his latest efforts at learning Morse code — four new letters, all printable: E, I, S, and H. He also informed me that he couldn't pay the rest of the money he owed me until the next week.

That took care of George.

The current deregulation efforts by the FCC are beginning to accomplish what a lot of amateurs have been trying to prevent for years — obtaining a license without a great amount of effort — or, in effect, giving away what has been protected through the years. There is no question that the introduction of two-way communication through the Citizens Band has sparked the desired interest to boost licensing in amateur radio and has created more sales for manufacturers, more dues for organizational efforts, more magazine sales, and more political bargaining power. That's the name of the game. But for the serious amateur, it may be too much.

The word "serious" is the word most often used in much of the text written today when describing a ham diehard. Maybe it's time to change that word to "creative." Some individuals tried this approach with the last major proposal concerning the creation of new types of licensing: Communicator, etc., creating a basic separation. It's becoming more apparent that a definite separation presently exists between operators and technicians. It always has, and, with the influx of new blood, this separation will be greater. The loud cry about and finger-pointing at the long list of new license applicants and who deserves the credit (or blame) for them doesn't have much of a bearing on the eventual outcome. Most of these new amateurs are being "created." Most will be operators, not technicians. Many will not have the pride that comes with earning the right to use the frequencies designated by each license.

Enforcing rules and regulations, servicing complaints, and ferreting out violators will soon be the problems facing amateur radio on a much larger scale than ever experienced at any other time. Will amateur radio be ready for it?

There are many amateurs and CB operators who deserve every consideration given with the license they hold, because they have earned the right to speak when and where they please simply by gaining the required knowledge. This article is not intended to belittle their accomplishments nor serve as a deterrent to the many new licensees who have a sincere desire to become good operators . . . but then . . . listen to 75-80 meters for a while . . . what rules and regulations?

Ole George just called. He said, "I learned three new letters, T, M, and O. Dah, dah dah, dah dah dah."

You know, Ole George, you may make it yet. ■

LETTERS

from page 79

THANKS

A terrible thing happened on March 12, 1978: Our house caught fire, and my husband and I received second and third degree burns, plus he was overcome with smoke. We lost almost all we owned. My husband was in critical condition in the ICU for nine days. He came home from the hospital April 7, 1978. My husband is Walt—WB5MWP.

We want to take this way to say thanks and God Bless to each and every one who was concerned about us.

A group on 40 meters opened a special bank account in our names at our bank. Hams from everywhere sent in donations. We have no way of knowing their addresses so we could even send a "Thank You" note.

The money was spent to hire a trained sitter for Walt at night, while in the hospital, so I could come home to the apartment to rest and take care of my burns.

We also bought a new oxygen gauge and oxygen for Walt to use at home. His had been destroyed in the fire.

We thank everyone for all of the get well cards and words of encouragement. We thought this would be a good way to say "Thanks."

Some money that was sent to the bank was from hams we have not talked with. A radio club in Ft. Worth, Texas, "passed the hat" at a meeting and sent the collection to the special account.

The Central States Traffic Net and The Kadlddle Hopper Bunch have been wonderful.

The local hams here just took over and moved some of our things we didn't lose to

Continued on page 87

Ray Brandt W9LIJ
824 N. Marion Ave.
Janesville WI 53545

The IC-22S Scanner

—still another 22S mod

Having wired the accessory socket of my IC-22S to permit remote channel selection, it soon occurred to me that it should be possible to make another accessory for scanning the 22S. The unit described will, in the absence of signal, scan four externally programmed channels within about one second; when a signal appears on a scanned channel, the activation of the squelch release light will stop the scanner on the active channel. When signal is removed, about 8 seconds later the scanning function resumes. Connection through a second diode to the transmit light insures that scanning remains stopped for the same 8 seconds at the end of transmission, should one desire to QSO while in the scanning mode.

As I use my scanner, the three popular local simplex frequencies and the output frequency of the local repeater are programmed for scanning.

Constructional details are left to the reader. I built my unit on a piece of perfboard about 2" x 4½", connecting point-to-point with #24 vinyl hookup wire. The unit is constructed using cheap TTL ICs available generally at Radio Shack or hamfests. Since the IC-22S is readily programmed externally with logic, this is only an example of scanner construction. The use of an MM-454 four-channel commutator would have provided the 4:1 clock countdown on the same chip. I resisted the temptation to use it in this device, since I question its general availability and cost. Other similar devices would have facilitated 6-, 8-, or 16-channel scanning; however, I find 4 to be just about ideal for my local use.

Clock pulses are provided by the 555 timer, at a rate controlled by the 68k resistor and 2 mF capacitor. Considerable experimentation led to the method of disabling the scan on an active channel. The handiest place to get at a control signal in the 22S was desired. This turned out to be associated with the idiot lights just above the signal/power meter. When the green signal lamp is lit, its right-hand terminal drops to nearly ground, resting at 13 V in the absence of signal. Similarly, the left-hand terminal of the red transmit lamp rests at 13 V and is grounded by the PTT switch when transmitting. By connecting the cathode of a silicon diode to each of these points, and connecting their common anodes to a lead from the IC-22S to the scanner, a point which goes to ground whenever the scanner is to be stopped has been provided. This connection is made to the junction of a 150k resistor and 50 mF capacitor shown associated with the 555 timer clock generator. When it grounds, the 50 mF capacitor is discharged,

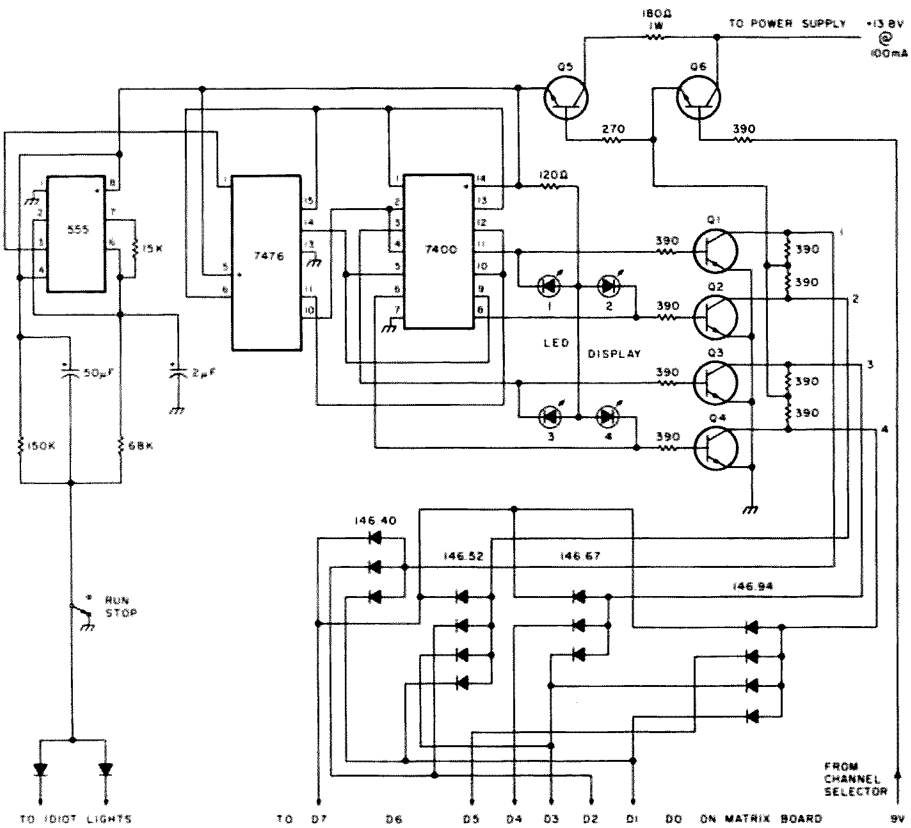

Fig. 1.

stopping the clock pulses. The clock resumes 8 seconds or so later when the ground is no longer present, and the 50 mF capacitor recharges toward 5 V through the 150k resistor.

The output pulses from the 555 drive the clock input of a 7476 dual J-K flip-flop which toggles at the scanning rate. The second flip-flop is driven by the first, by connecting pin 15 to pin 6, causing the second flip-flop to toggle at one half this rate. Four outputs are available from the two flip-flops. Two of these are merely upside-down versions of the other two. To produce a sequence of four from these available waveforms will require some crude processing. The 7400 IC, a quad dual gate, available for even less than the 7476, proved to be the answer.

Refer to Fig. 2. Output 1 is produced whenever inputs a and c are in logic state 1 (up). This occurs only once out of four clock pulses. Similarly, output 2 is produced by the 7400 whenever inputs b and c are up, three when a and d are up, four when b and d are up. The four outputs of the 7400 on pins 11, 8, 3, and 6 each are in the 0 (down) state in rotation 1, 2, 3, and 4.

To produce a channel selection, each diode matrix must have +9 V applied to it in rotation. As can be seen, the output of the 7400 is inverted from what is desired, and does not swing from 0 to +9 V, but swings from 2.8 V to about .8 V. Since most IC inverters would swing through the .8 to 2.8 V range, they are unsuitable. So a series of four general purpose NPN 300 mW transistors were utilized to provide the inversion and a series of outputs swinging between 0 and 9 V. They are cut off one at a time, providing 9 volts to only one diode matrix at a time, in sequence.

Four LED pilot lamps are shown connected to the 7400 outputs to provide conventional scanner indication, conducting one at a time as the scanner operates, stopping to indicate an active channel.

Q6 acts as a switch and emitter follower to produce 9 V for the output transistors from the 13.8 V source, so as not to load the IC-22S 9 V bus as supplied from its channel selector. Q5 senses the presence of 9 V and switches on 5 V to the IC circuits, the voltage drop being almost entirely across the 180 Ohm 1 Watt resistor, thus minimizing its dissipation. The entire unit draws about 100 mA from the 13.8 V supply. About half this current is required by the ICs and LEDs, the balance being shared by the three conducting output transistors. Adding 4 emitter followers would have permitted larger collector resistors and provided a low impedance source to the diode matrix, but the power wasted did not seem worth saving, and 390 Ohms was tolerated by the diode

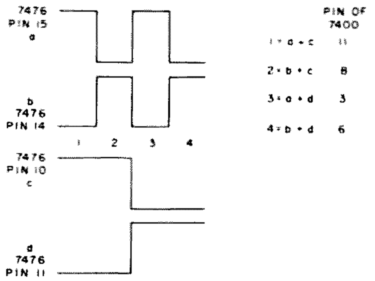

Fig. 2.

matrix.

Interconnection of the scanner and the 22S to accomplish channel selection can be done in alternate ways; some forethought is indicated depending on how one intends to use the accessory socket. A minimal modification could be employed, using the 9-pin accessory socket to bring out 7 diode leads, omitting the D0 diode (sacrificing offset 15 kHz scanning capability), and having the remaining leads be used by the 9 V common brought out from the channel assigned to external scanner, and for the active channel stop control lead. I devote channel 23 to mine. Just above the channel indicator window at the backside of the switch is a blank pin which has the required 9 V when switched to the green dot which follows channel 22. I covered the other green dot with a small strip of electrical tape to eliminate the confusion of the two green dots.

Probably the preferable method of modification is to install the 24-pin molex connector available from the Icom distributor or service depot to whom the warranty was mailed. A complete connector set is available for about five dollars. Then you can touchtone, too.

If the scanner is to be your only accessory, another method would be to bring out leads from the four channels already programmed in the Icom to the scanner via the 9-pin accessory socket along with the other two. These are numbered along the long edge of the matrix board, as anyone who has programmed his unit knows. Those diodes already on the matrix board can just as well be used for the dual purpose; after all, the selector is on channel 23 to make the scanner run, and they are just sitting in there.

If you decide upon this method, it is recommended that diodes be inserted in each of the four leads to the IC-22S matrix board with their cathodes facing the matrix. This will prevent current being drawn by the scanner when the 22S is used in its conventional manner. ■

LETTERS

from page 85

storage. Hams we used to talk to a few years ago, when we were Novices in Texas, also sent in money to the bank.

Local people brought in food, clothing, bedding, etc. When our home is repaired, we will move back into it.

Our rigs were mostly destroyed, but we hope to get back on the air sometime soon.

Maybe someday, in some way, we can help someone in return for the help we have received.

Thanks again and God Bless.

Sue Kinney WB5MWO
Norman OK

SOUTH SHORE SUPPORT

The 110 members of the South Shore Repeater Association are fully and completely in support of your effort to keep present amateur radio frequencies from being allocated to non-amateurs. The present requirements for amateur radio licenses and the incumbent privileges are not prohibitive or unattainable for any segment of our population. They do serve the positive functions listed below, among others:

1. They require one to *earn* the privilege of operating on these frequencies, and therefore to appreciate and respect these privileges.
2. They encourage more people to acquire related skills and knowledge, thereby increasing the nation's resources in these important areas.
3. Organized amateur radio operators have proven themselves to be very efficient, effective, and valuable in disasters and emergency situations, such as the great blizzard of

Continued on page 89

Computerized Capacity Meter

—cost: $1 plus a computer

Jim Eccleston
1999 Cardinal Crescent
North Vancouver, BC
Canada V7G 1Y3

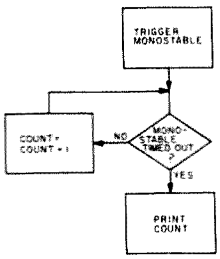

Fig. 1.

I was caught up in the hacker frenzy while attempting the design of some higher-order active filters. Having spent more than a few hours programming my SR-52 to solve cubic and quartic equations, I realized that some heavier-duty number-crunching was called for if I really wanted to obtain those steep skirts. So off I headed to my local friendly computer store, from where I returned several hours later with several heavy boxes and one extremely light wallet.

The kits went together surprisingly well and produced only a couple of minor bugs. I ran in my number-cruncher and design programs and settled back to enjoy the fruit of my labors. Everything was fine and dandy, except for the fact that I now needed several close-tolerance capacitors, but I did not have any kind of a bridge for measurement. Since the state of my wallet precluded the purchase of such an instrument (or even the cost of several 1% capacitors for a one-off filter), I decided to make use of whatever I could find in my junk box to build something that would do the job with a little assistance from the computer.

Overall Design Considerations

The design considerations were simple:

1. It had to be extremely cheap to build.
2. It had to be extremely easy to build.
3. It had to use a minimum of both hardware and software.
4. It had to be reasonably accurate.

The resulting circuit uses only three readily-available components, a small machine language routine (which can be called from BASIC), and the accuracy is limited only by the clock speed of the computer system being used (see Table 1). Rather than give specific details, I thought it best to give a thorough description of the method used together with a flowchart (Fig. 1). This would enable the system to be tailored to any computer, although I have included some code for 8080-based systems as an example.

Circuit Design

The circuit consists of a

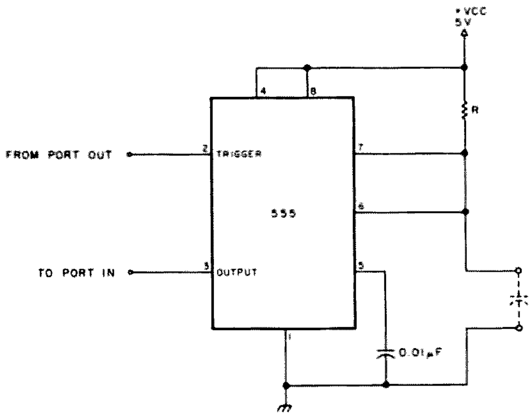

Fig. 2.

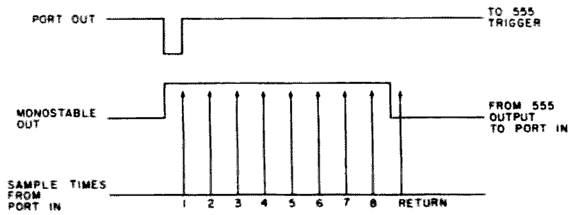

Fig. 3.

```
Top     3E FF      MVI A,OFFH    Make sure trigger
        D3 xx      OUT PORT      is not active.
        21 00 00   LXI H,00      Clear counter.
        3E 00      MVI A,00      Send bit to
        D3 xx      OUT PORT      trigger monostable.
        3E FF      MVI A,OFFH    Reset the
        D3 xx      OUT PORT      trigger.
LOOP    DB xx      IN PORT       Watch the monostable.
        FE FF      CPI OFFH      Is it active?
        C2 xx xx   JNZ OUT       No — go end routine.
        23         INX H         Yes -- increment counter.
        C3 xx xx   JMP LOOP      Loop some more
OUT     7C         MOV A,H       routine to pass
        45         MOV B, L      value in H, L back
        CD 9C 0C   CALL 0C9C     to BASIC (MITS).
        C9         RET           Return to BASIC.
```

Program A.

```
10 PRINT"CAPACITANCE METER"
20 A = 0                        Initialize count.
30 FOR I = 1 TO 10              Set up for 10 triggerings.
40 X = USR(0)                   Link to user routine here.
                                X = returned count value.
50 A = A+X                      Add this count to total.
60 NEXT I                       Loop again.
70 B = A/10                     Calculate average.
80 B = B*C                      C is calibration factor.
90 PRINT B
100 END
```

Program B.

```
10 X = USR(0)                   Link to user routine
20 INPUT"ENTER KNOWN CAPACITANCE IN pF" ;Z
30 PRINT"CALIBRATION FACTOR C =";Z/X
40 END
```

Program C.

555 timer chip wired in a standard monostable configuration (Fig. 2).

Circuit Operation

The monostable is triggered under control of an output port bit. Triggering the 555 requires a trigger signal going from a high (+5) level to a low (0) level for a brief period and then returning the trigger signal to a high level (see Fig. 3). The monostable now switches its output to a high level, and this level is sampled at an input port until the monostable times out. While the monostable is timing out, a count is made, and this count is software scaled to equal the value of capacitance that determined the length of the monostable (see Program A).

Software

The whole program can be written in machine language using very little memory, or the count routine can be inserted in memory and called from BASIC via a USR or CALL statement. The example shown in Program B uses a simple BASIC routine which can be expanded to the desired esoteric level. The count from the monostable is averaged over ten triggerings, and the resultant count is then multiplied by a calibration factor to give the value of capacitance used. This count may then be output in whatever form you may choose.

Capacitance in pF	Accuracy
10	40%
100	4%
1000	0.4%
10000	0.04%
100000	0.004%

Table 1. Assuming count loop for one count is approximately 20 microseconds.

Calibration

Insert a known value of capacitance in the circuit, and run the calibration program (Program C). Enter the result from this program into statement 80 of the main program (Program B). Stray capacitance in the test leads can be calculated by running the program without a capacitor in the test leads and changing the BASIC program to compensate. (Don't forget that you are averaging ten triggerings!)

The representative listing shown (Program A) is from my own breadboarded setup attached to a parallel port, using the high-order data in/out bits. For breadboard purposes, I ran a line from the bit 7 data out to the trigger input and fed the monostable output to the bit 7 data in. The other lines were left floating, which accounts for the bit structures you see addressed to the port in the machine language listing.

Using a 4.7 megohm resistor, my breadboard setup measures from less than 100 picofarads to better than 0.1 microfarads. If you need to cover a larger range, you need only change the value of the resistor and recalibrate. Out-of-range detection can, of course, be accomplished by inserting a software routine to check for a carry during the count and return you a message to change ranges when this occurs. Again, be cautioned, any increase in the size of the count loop will affect the accuracy of measurement.

Timing considerations for the 555 in a monostable configuration are given by T = 1.1 RC. Because of this relationship, this circuit can also be used to measure resistance, though it then needs to be calibrated with a fixed value of capacitance. ■

LETTERS

from page 87

February, 1978, in the northeast. Their well-developed and competently handled communications systems were of inestimable value, and they provided selfless sacrifice in time and comfort to provide service and save lives.

4. Because of their technological interests, amateur radio operators continue to improve themselves by constant interchange of technical information, and they often pioneer in new fields such as microprocessors, satellite communications, and other related frontiers.

5. Communications with radio amateurs in other countries have been on a very high plane and have done much to foster good will and understanding around the world.

There are many fine people who operate on Citizens Bands today. Unfortunately, there are too many others who are undisciplined and uncontrollable and use these bands with complete disregard for the rights and feelings of others. They would do much to degrade the frequencies they are now prohibited from using, if these were allocated for general use.

We reiterate that there are no insurmountable restrictions placed in the way of earning radio amateur privileges; anyone of any race or creed can earn the license.

Francis J. DiSabatino K1WGJ
Weymouth MA

NO BREAKERS

I just completed a 2 meter AM QSO with WB2LLV. It was old-fashioned by today's standards—full of reminiscence of the good ole days and 5 minute monologues. There were no

Continued on page 91

A Much Needed Micoder Power Supply

—beats that lily-livered battery

James R. Avoli K3MPJ
1261 Brinton Road
Pittsburgh PA 15221

My umpteenth embarrassment at reaching a wrong number through the autopatch was sworn to be my last . . . well, almost my last, anyway.

Photo A. Points of interest are indicated by the white dots.

At first, I thought the problem was coming from road noise inside the car being transmitted along with the tones because of an open (live) microphone. But I kept getting unreliable results while trying to cover the mike while dialing.

The real problem became more obvious when I noticed that the LED tone indicator glowed unusually dim one night. It seems that, with daily use during rush hours and a few QSOs from the QTH throughout the week, the internal battery voltage falls off to about 8 volts within a month. The microphone still works fine, but the tone generators run slightly off frequency, and that's the most deceitful way to get wrong numbers through any autopatch. The repeater's decoders gave the benefit of the doubt when accessing the autopatch, but Ma Bell was just too critical.

The folks at Heath have chosen to power their cleverly-designed Micoder from an internal 9 V transistor radio battery. If I may, I'd like to second-guess that the reason for this was so that it could sell on the amateur market as an accessory item for any transceiver. But, in their infinite wisdom, they forgot about their primary prospects — the owners of the HW-2036, one of the best kits I have known them ever to have marketed (but that's another story). What they forgot was that, for the small cost of one more conductor in the coiled cord and a couple of additional components, they could have produced a far more superior product. And that's exactly what this article is all about.

Bye-Buy Battery

My solution was to replace the coiled cord with one having an extra (shielded) conductor, Belden's #8491, which retails for $3.98 plus tax. Using that extra conductor proved to be an easy task. I channeled it past the transmitter, grounded the shield to C155, and connected the center conductor to the wire leaving pin W. This now supplies 11 volts

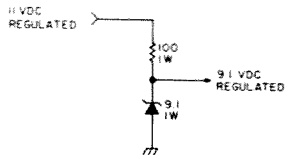

Fig. 1.

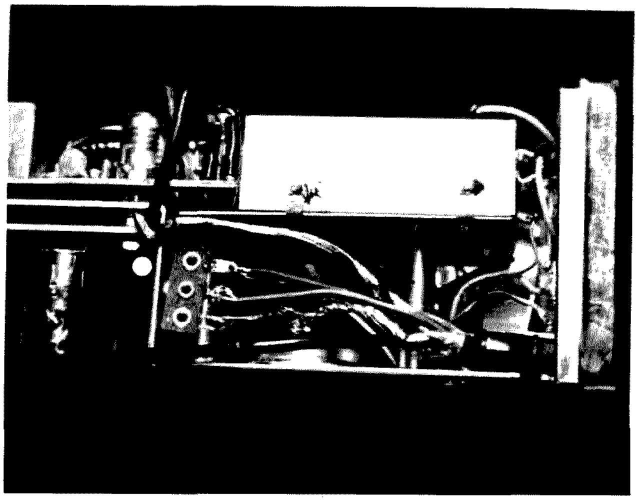

Photo B. Detail of the routing of the additional conductor.

(regulated) to the Micoder. Since it will draw less than 10 mA, Q104 is still within its safety rating. Since the HW-2036 is primarily a mobile unit, my better judgment forced me to tack this wire and the "long cable" (as the assembly instructions called it) to the chassis with two dabs of epoxy glue, as illustrated in Photo A. When the remaining wires of the replacement coiled cord are connected to terminal strip AT, be careful of two things: (1) Don't damage CI (22 uF tantalum), and (2) pay careful attention to which shielded lead was used for the audio conductor and which one was used for the voltage conductor (one black center conductor is solid black, while the other black center conductor is black over white). See Photo B.

Meanwhile, back at the Micoder, I removed the battery and its connector and grounded both shields from the coiled cord. Then I constructed the secondary 9 V regulator, as shown in Fig. 1. I used a General Electric GEZD-9.1, which retails for 90¢ plus tax, and, for no other reason than that the zener diode has a 1-Watt rating, I used a junk box variety 1-Watt, 100-Ohm resistor (where a 1/4 Watt would have sufficed). Then I packed both components in the crevice beneath the PTT switch actuator, as shown in Photo C.

Now comes the smoke test. I attached a voltmeter to the nine-volt point and powered up. Success! I transmitted — still nine volts, and the repeater keyed up. Success again!

I announced myself and got a response, so I knew the microphone worked. I calibrated the tone generators and brought up the autopatch. Ah, total triumph at last — no more wrong numbers, no more embarrassments. And it had cost me only about five dollars, which is cheap by anybody's standards.

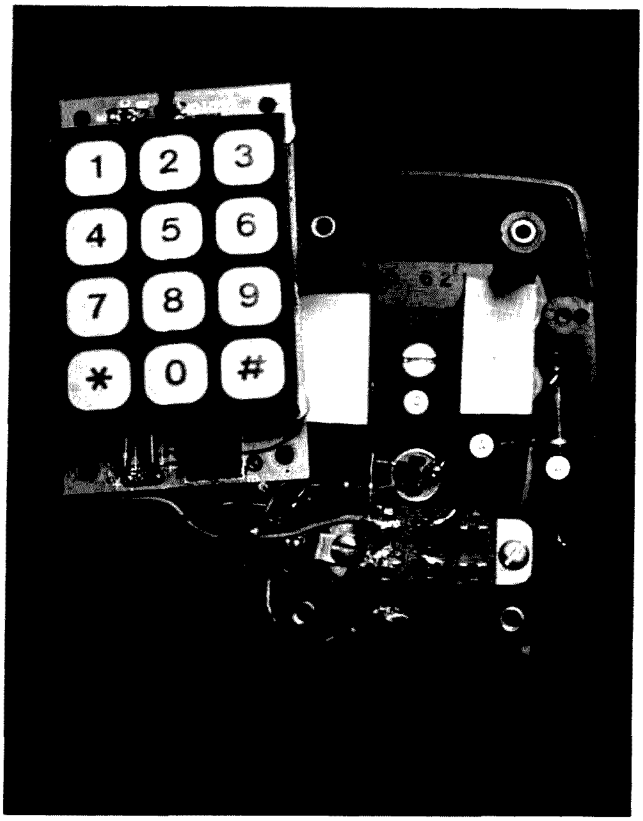

Photo C. Interior of upgraded Micoder: (a) zener diode, (b) 1-Watt resistor, and (c) no battery.

Enter Dr. Murphy

In my own inimitable way of patting my own back, I had forgotten all about Murphy's Law #719 (Italian fingers can still dial incorrectly), #722 (phono-plug-style antenna connectors can still fall off when the transceiver is accosted by a Pittsburgh pothole after the number is dialed but before the connection is established), and #745 (at least 5000 other hams are reading the mail during the time frame that the above embarrassments are being perpetrated). Humbug! ■

LETTERS

from page 89

breakers, time outs, QRM, QSB, TVI, or BCI. Now, it's been a long time since I have had a 1-hour QSO and years since I've had a QSO without the "normal" hassle we have grown to accept. Wayne was mentioned in the remembrances of the big pileup and the signal that W2NSD/1 would belt out from N.H.

This note is not intended to get you thinking of the old days, but rather to point out that there are a lot of operators who don't know of the old days. I rather suspect that a small percent of all present 2 meter operators really know the capability of the band. Their experience is limited to the local repeater range. The jerks in Washington have now set the conditions to put the local repeater everywhere. It's small wonder that I bought a mint Gonset III for $10 last weekend (my II is still a better rig). I also bought a Clegg Thor 6 for $75. Now, how many of the kids, lids, and school bus riders have felt the thrill of a 6 meter opening (or even know of 6m)? Get your typewriter going, Wayne, and tell the kids what is available. Put NSD/1 on the VHF/UHF bands 2 or 3 nights a month to remind the northeast what can be done.

No, I am not the recluse hanging on to youth. I operate 160 through 3/4 meter SSB, CW, AM, SSTV, and 2 FM, and Oscar A and B. The lost art of rag chewing can be best practiced on VHF AM.

Chris Schiotz W2HKW/K2PGB
Ringoes NJ

P.S. CW within 25 kHz of the lower band edge is a great place for DX. The CB converts will buy linears, but they refuse to practice CW. Both of my converts have virtually forgotten the code.

Bill Johnston N5KR
1808 Pomona Drive
Las Cruces NM 88001

Your 'Scope Can Be Improved

—simple calibrator

The oscilloscope is one of the most versatile instruments in the ham shack, and it would probably take an entire book just to list its many uses. Quite a few of the lower priced instruments, however, are handicapped by the fact that, though they can faithfully display the shape of the waveform under examination, they cannot be used to accurately measure the amplitude or the frequency of the signal. This is true not because there is anything wrong with the instruments themselves, but simply because most of them do not have built-in calibration circuits, or they have only very rudimentary ones.

Amplitude calibration is normally carried out by applying a signal or voltage of known amplitude to the vertical input of the oscilloscope and adjusting the vertical gain control until the displayed signal spans a given number of divisions on the reticle. You then have a known calibration value in volts per division (V/div.), and the amplitude of any unknown signal or voltage can be read directly from the screen.

The scope's vertical input attenuator can be used to accurately measure higher voltages. For example, if you calibrate the scope to read 1 V/div., then, by simply turning the attenuator switch to the X10 position, it will be calibrated at 10 V/div. You can go the other way, too. For example, start out with the attenuator in the X10 position and calibrate the scope to display 1 V/div. Then turn the attenuator back to X1, and the scope will be calibrated at 0.1 V/div. (i.e., 100 mV/div.).

Frequency measurements are handled in a similar fashion, but by using the horizontal sweep frequency and/or gain controls to calibrate the horizontal axis such

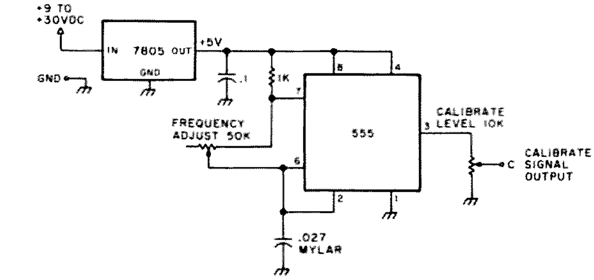

Fig. 1. Circuit diagram of the N5KR oscilloscope calibrator. It uses only seven components, all of which are readily available.

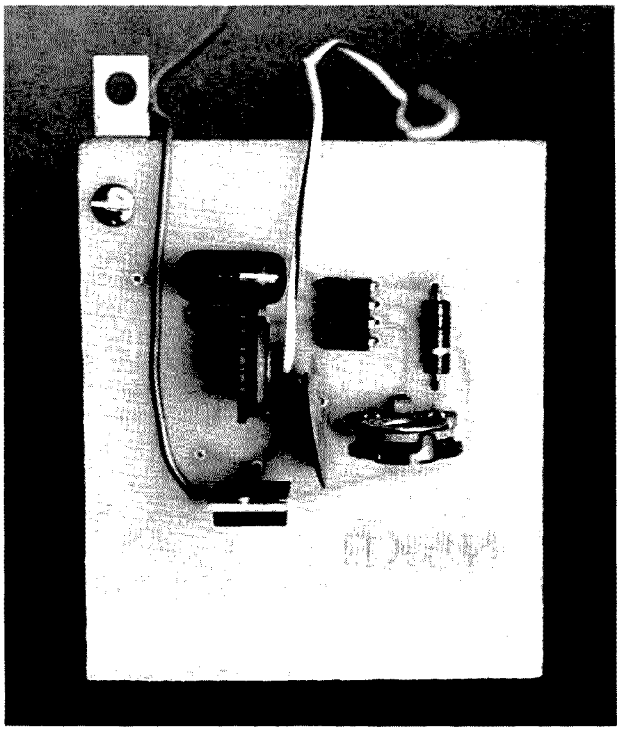

Fig. 2. Photograph of the finished board ready for installation in the scope. The trimpot at the lower right sets the frequency, while the one toward the left sets the amplitude of the calibrate signal.

that the signal of known frequency is displayed with a given number of cycles per division. The frequency of an unknown signal can then be measured by noting the number of cycles per division it occupies on the screen.

My own oscilloscope had a built-in calibration signal, but it consisted of nothing more than an extra winding on the power transformer to supply 1 volt peak-to-peak at 60 Hz. Consequently, any line voltage changes would cause the amplitude of the calibration signal to change by the same percentage, which was entirely unacceptable for accurate measurements. The frequency was that of the line itself and, consequently, extremely accurate. However, 60 Hz is such a low frequency compared to the signals normally being measured in the audio range that the measurements which are possible in theory are not possible in practice because of the great percentage difference (that is, the ratio) between the reference signal and the unknown signal.

The solution to all these problems is the circuit shown in Fig. 1, which generates a stable square wave calibration signal and costs less than $3.00 to build. The component values shown have been selected to provide a symmetrical 1-volt p-p signal at 1000 Hz when the two trimpots are calibrated. The 555 timer generates the signal at a stable frequency, while the 7805 regulator ensures a fixed amplitude. The entire circuit contains only seven components, which are mounted on a small PC board as shown in Fig. 2. The 1 V p-p signal enables fast and simple calibration of the scope in the vertical (amplitude) axis, and the 1000 Hz frequency is a nice round reference frequency for analysis of most audio signals. The circuit board is small enough to mount inside of the oscilloscope itself, with the few milliamps of power required being supplied from the scope's existing power supply.

Construction

The circuit is simple enough to build on perfboard, and parts layout is not critical. I built mine on a small PC board, the layout for which is shown in Fig. 3. Parts placement, as viewed from the component side, is given in Fig. 4.

Component tolerances of 20% are satisfactory, since the two trimpots are used to make the final amplitude and frequency adjustments. In fact, the .027 uF capacitor can be substituted for with any value from .02 to .047, if you don't have a .027, but it would be better to go lower in value rather than higher, if you have a choice. The important thing is that this capacitor be of mylar or other temperature-stable type. The PC layout shown in Fig. 3 has two different solder pads (one on an extension) on the ground side of this capacitor to accommodate whatever capacitor you select, since its physical size may be different from the one I used. There are also a couple of extra solder pads for making an external ground connection, if desired.

The 7805 regulator may be substituted for with an LM340T-5, which is the same device. On rare occasions, these regulators have been known to go into self-oscillation. Should you encounter this problem, replacing the .1 uF disc capacitor with a 1 uF tantalum capacitor should clear it up.

Mounting and Power Connections

The circuit is so small that it can be mounted almost anywhere in the scope. In fact, you can trim the PC board down a lot smaller than the one shown in Fig. 2, which has a lot of blank space around the edges. You should, however, make it a point to mount it as far as possible from major heat sources so that the calibrator's frequency stability won't be impaired.

Fig. 5 shows my own installation, where the calibrator board is supported by a single Z-bracket fastened to the chassis (in the lower right-hand corner, toward the rear of the scope).

The input voltage can be anywhere from +9 to +30 volts dc, and you won't have any trouble finding a supply voltage somewhere in this range in a solid state oscilloscope. If your scope is tube type, you might still find a voltage of the proper value, but if not, you can obtain it from a higher voltage through an appropriate voltage divider. The supply voltage doesn't have to be regulated, but, on the other hand, you want to avoid one that fluctuates widely. The negative (ground) connection can be made through the mounting bracket, if desired.

If your scope has an existing jack on the front panel for a calibrate signal, just disconnect the wire from the existing calibrate signal and run a new wire from the jack to the calibrate signal output (C) on the circuit board. If you don't already have a jack or if you want to retain your existing calibrate signal, you will need to mount a small pin jack on the front panel for this connection.

Calibration

In order for the calibrator to be of any use, it must itself be calibrated in an accurate manner, and the circuit has been designed for simplicity in that respect. First, set the two trimpots to mid-scale. Now, with power applied to the calibrator circuit, use a VTVM or other accurate voltmeter to measure the calibrate signal at C. Set the voltmeter to read "dc volts," and adjust the 10k pot until the meter reads exactly one-half volt (0.5 V). Fig. 6 shows the reading being taken for this adjustment. The square wave at the output now has a peak-to-peak amplitude of exactly 1 volt.

What you have done here is used the dc voltmeter to measure the average output voltage, and, since the signal

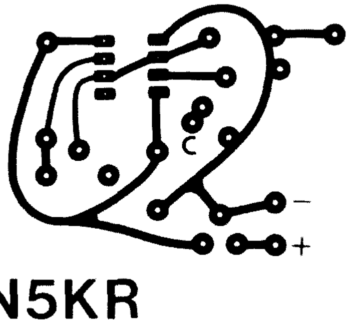

Fig. 3. PC layout, foil-side view.

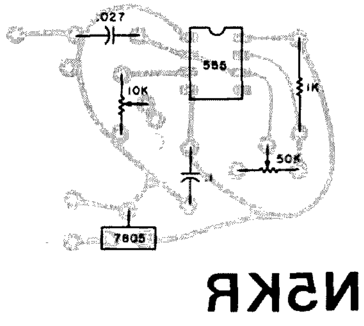

Fig. 4. Parts placement, component-side view.

is switching back and forth between 0 volts and 1 volt, the average value you read on the meter is 0.5 volts. This is true only for a symmetrical square wave, of course, and the component values in this circuit have been chosen such that any error in symmetry is less than 1% at 1000 Hz. You also have to be assured that the negative (low) half cycle of the signal is actually at zero volts, which it is, for all practical purposes, when the 555 is operated at the 5 V input voltage supplied by the 7805 regulator.

The easiest way to set the frequency is to measure the calibrate signal with a digital counter. If you don't have access to one, an accurate audio signal generator can be used, with the calibrate signal frequency being adjusted to match the known signal while they are being watched on the scope. In any case, the frequency of the calibrate signal is adjusted with the 50k pot.

If you prefer a frequency other than 1000 Hz, you can set the pot for a lower frequency without hurting anything. If you set the pot to a higher frequency, though, the symmetry of the waveform will be upset. To go to a higher frequency, you should lower the value of the .027 capacitor instead, using the formula:

$$C = 28/F,$$

where C is the value in microfarads of the new capacitor, and F is the desired signal frequency.

Summary

This is one of those satisfying projects that you can put together in an hour or so, at a cost of only two or three dollars, and see the results immediately. It consists of only seven components, which are available from any retail or mail-order electronics dealer. It's a handy little device that will enhance the utility of lower cost oscilloscopes, and you can sit back and enjoy using it for years to come. ■

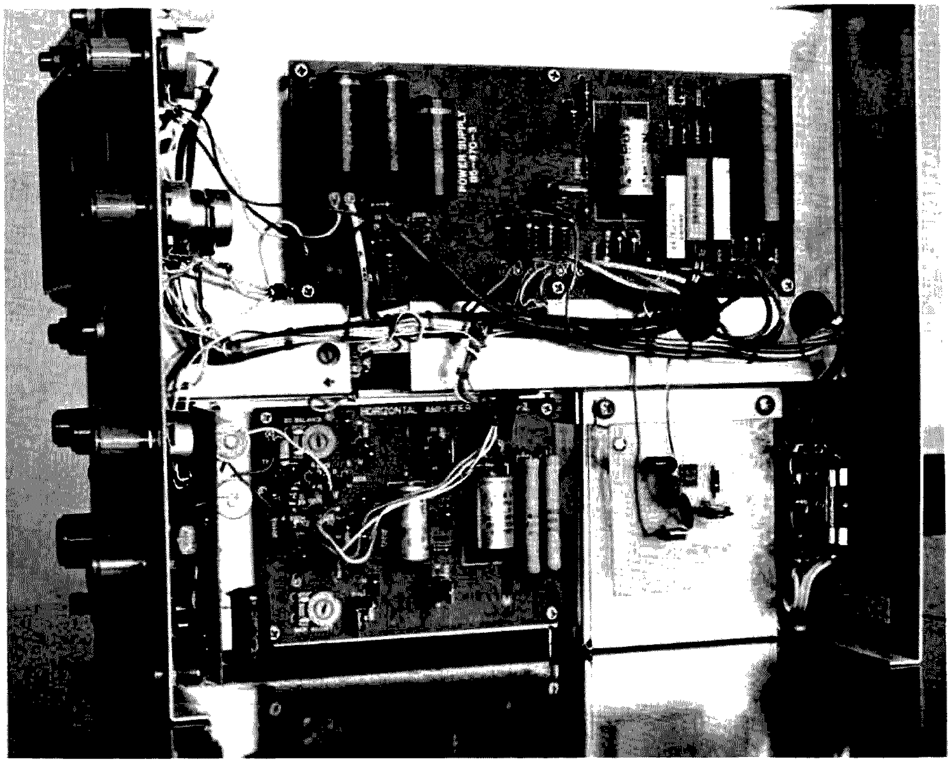

Fig. 5. A typical installation of the finished calibrator in an oscilloscope (lower right corner, toward the rear of the scope). Placement is not critical, but you should avoid areas of high temperature so that its frequency stability won't be impaired.

Fig. 6. Adjusting the calibrator output to 1 V p-p gives a reading of exactly 0.5 volts when the voltmeter is set to read "DC VOLTS." This eliminates the need for an expensive instrument to accurately set the amplitude of the calibrator waveform.

Robert F. Cann W4GBB
1606 Lochwood Dr.
Richmond VA 23233

How About SSB CB Conversions?

—no strain

After almost 20 years of hamming on the low-frequency bands, I have become very disillusioned with the QRM and crowded conditions that exist. After a short time with 40 meter QRP and 2m, I decided to explore the new frontiers of the 10 meter band. Since I am a QRP advocate and a member of the QRP Club International (QRP #3214), I began my 10 meter activities with a converted AM CB rig and a vertical CB antenna. The results were very rewarding, and, in January of this year, I began looking for an SSB CB rig to convert.

The Kraco Model KB-2355 described in this article was selected because of its price (under $140 at a local department store sale), and closer examination revealed features that are desirable in a modern ham rig. (See Table 1.)

In addition to those features, the Kraco has dual meters for received signal and power/swr, a switchable noise blanker for SSB, and a switchable noise limiter for AM. Although the unit is larger than most CB rigs (13" x 4" x 10"), it is an excellent size for base station operations and leaves enough room internally for those who wish to add a receiver preamp or a small linear amplifier.

Since this unit uses 10 crystals in the 23 MHz and 14 MHz range to achieve synthesis action, it is only necessary to change the four 14 MHz crystals to achieve 10 meter coverage. Table 2 shows the original frequency scheme and the new crystals added to give you 10 meter coverage. You may wish to use different crystal frequencies for the high end of the band, since there has been increased activity above 29 MHz. Fig. 1 indicates the location of the crystals on the 23-channel switch deck.

The crystals in the Kraco are the HC-18/U type, and, in order to gain access for soldering, it will be necessary to remove the front panel and remove the 2 Phillips-head screws holding the push-button switch deck in place. Once this is done, the switch deck can be moved aside to allow access to the underside of the crystal board.

Once the 4 new crystals have been installed and the switch deck and front panel have been put back in place, you must retune the transmitter and receiver sections. The only equipment necessary is an rf signal generator, and the procedure should take no longer than 30 minutes.

With the signal generator tuned to the center of the frequency range that you have chosen, proceed as follows:

Crystal switch: Ch. 11 or 12
Mode switch: AM

Tune the following coils, in the sequence listed, for a maximum indication on the S-meter:

1. L202
2. L203
3. L204

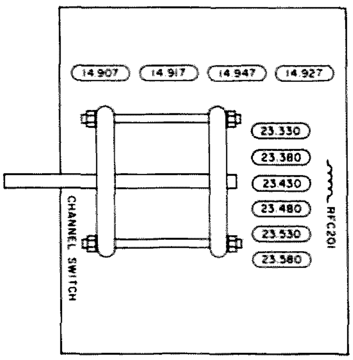

Fig. 1. Placement of crystals on the crystal board. The original crystal frequencies are indicated.

General	
Frequency control:	10-crystal synthesis configuration
Mode of operation:	AM, USB, and LSB
Power source:	110 V, 50-60 Hz, 11-16 volts dc, negative ground
Receiver	
Sensitivity:	AM – 1 µV for 10 dB (S+N)/N SSB – .25 µV for 10 dB (S+N)/N
Bandwidth:	4 kHz at 6 dB down for SSB and AM
Image Rejection:	40 dB
Offset tuning:	±1 kHz
Audio output:	3 Watts at 8 Ohms
i-f frequency:	11.2735 MHz for SSB and AM
SSB Transmit	
SSB generation:	Balanced ring modulator with crystal lattice filter
Rf output:	12 Watts PEP
Carrier Suppression:	40 dB down
Harmonic Suppression:	50 dB down
AM Transmit	
Modulation:	High level class B
Rf output:	4 Watts
Harmonic Suppression:	50 dB down

Table 1.

4. L18
5. L19
6. L20

Place the mode switch in the LSB position and continue:

1. L13
2. L14
3. L15
4. L16
5. L17

This completes the receiver alignment for all modes. Now disconnect the signal generator and connect a dummy load or two 100-Ohm, 2-Watt resistors across the coaxial antenna jack. With the mode switch in the AM position and while pushing the mike switch for short durations, tune the following coils in the sequence listed for a maximum indication on the rf meter:

1. L1
2. L2
3. L3
4. L4
5. L5
6. L6
7. L7
8. L601

This completes the basic conversion, and, if you have used the same crystals that I have, you are now ready to work 10 meters on any 23 channels between 28.55 and 28.83 MHz. However, you are rockbound and the success of any QRP rig is its ability to move around with continuous coverage. This problem is solved with the following modification:

1. Remove the front panel and push-button switch deck as previously indicated.

	ORIGINAL			CONVERSION		
Channel	X201 through X206	X207 through X210	CB Frequency	X201 through X206	X207 through X210	10 meter Frequency
1	23.330	14.907	26.9635	23.330	16.492	28.5485
2		14.917	26.9735		16.502	28.5585
3		14.927	26.9835		16.512	28.5685
4		14.947	27.0035		16.532	28.5885
5	23.380	14.907	27.0135	23.380	16.492	28.5985
6		14.917	27.0235		16.502	28.6085
7		14.927	27.0335		16.512	28.6185
8		14.947	27.0535		16.532	28.6385
9	23.430	14.907	27.0635	23.430	16.492	28.6485
10		14.917	27.0735		16.502	28.6585
11		14.927	27.0835		16.512	28.6685
12		14.947	27.1035		16.532	28.6885
13	23.480	14.907	27.1135	23.480	16.492	28.6985
14		14.917	27.1235		16.502	28.7085
15		14.927	27.1335		16.512	28.7185
16		14.947	27.1535		16.532	28.7385
17	23.530	14.907	27.1635	23.530	16.492	28.7485
18		14.917	27.1735		16.502	28.7585
19		14.927	27.1835		16.512	28.7685
20		14.947	27.2035		16.532	28.7885
21	23.580	14.907	27.2135	23.580	16.492	28.7985
22		14.917	27.2235		16.502	28.8085
23		14.947	27.2535		16.532	28.8385

Table 2. With an i-f frequency of 11.2735 MHz, final frequency generation is offset 1.5 kHz for SSB. Only the four 14 MHz crystals need to be changed for 10 meter coverage.

2. Place short jumper wires across the miniature netting capacitors associated with the four added 16 MHz crystals. These are indicated as TC201 through TC204.

3. Remove the end of RFC 201 (on crystal board) which connects to the low side of the netting capacitors you just shorted out.

4. Connect a miniature tuning capacitor (approximately 170 pF) in series with RFC 201 and its original connection on the board. I used a miniature tuning capacitor from a transistor broadcast radio for this purpose.

5. Remember that this capacitor must be insulated from ground, so I will leave the physical mounting up to you. A method that worked well for me and did not disturb the appearance of the front panel too much was to mount the capacitor on a small U-shaped bracket and bring an insulated shaft through the pilot light hole at the right of the crystal switch.

With the addition of this capacitor in series with the low side of the 16 MHz crystals, you will achieve approximately an 8 to 10 kHz swing on each of the 23 channels. You have advanced from rockbound to vxo-controlled and have achieved the flexibility necessary for QRP.

I have been using this rig with much success for the past year and have worked six continents and all fifty states. As most of my contacts have stated, the rig has excellent audio quality and, with my 4-element 10 meter beam, has a good punch.

After having so many inquiries on the air and after reading the comment by Wayne in the June issue of *73 Magazine*, I decided to share this information with you. My final modification on the rig will be to add a CW mode, and I would welcome any comments or suggestions on this. ■

David J. Brown W9CGI
RR 5, Box 39
Noblesville IN 46060

The Universal Notcher

—easy as pi

I have long been thinking about writing articles on construction projects whose main advantages are the use of a PC board for error-free and repeatable circuits, the neatness of a PC board, because it cleans up the inevitable wiring that accumulates in any ham shack, and its high use-to-simplicity ratio (one board: many uses). This is the first article of that type, describing an audio notch filter. The board is laid out for 2 channels of audio (stereo) for my use, but it can be half built or split down the lettering on the board for two separate filters.

Anything I have come up with on this lesser-used type of audio RC filter I will list in the references for those who want further history on it.

I use this filter at the phono inputs of a stereo amplifier/cassette tape deck combination to eliminate any hum (60 Hz stray) picked up over long lines (6-12 feet) from the EME rack to the console, where the amplifier and tape deck reside in a drawer for easy use. Those of you who are CW-operator types may see its obvious use as a notch filter that can be ganged in parallel to knock out 2 adjacent beats or used to bracket the desired signal in a bandpass style. Other possible uses are: with an op amp IC bandpass style as an easily tuned/no coil i-f amplifier; as the oscillator frequency determining element in a bfo or variable frequency audio generator; as slot filters at other frequencies than 60 Hz (notch out loran signals at VLF?); and the list goes on! Perhaps the best thing this RC network has over others, the twin-tee for example, is the fact that it "tunes" with only the single pot, R_{fa} in the schematic.

The very simplicity of the

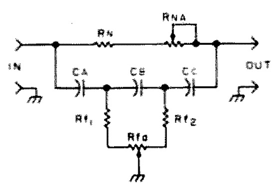

Fig. 1. Schematic (one channel). $R_n = R_{null}$; R_{na} = null adjust; R_{f1} and $R_{f2} = f_{limit}$; R_{fa} = frequency adjust. General formulas: 1) $f_o = 1/2\pi C_x\sqrt{3(R_x)^2}$, where R is in Ohms, $R_x = R_{f1} + R_{fa}/2$, and C_x = any Ca, Cb, or Cc. This allows f_o of interest at R_{fa} centered. 2) $R_x = 1/(\sqrt{3})(2\pi)(f_o)(C_x)$. 3) $C_x = 1/(\sqrt{3})(2\pi)(f_o)(R_x)$. 4) $R_n + R_{na} = 6[(R_{f1} + R_{fa}/2) + (R_{f2} + R_{fa}/2)]$.

	R_{fa}	R_{f1}	R_{f2}	Ca	Cb	Cc	R_n	R_{na}	$R_n + R_{na}$
Example 1: 60 Hz									
calculated	10k	[5672.1 Ω - (R_{fa}/2)]		[.30629 x 10^{-6}]					68160 Ω
Actual used	10k	680	680	.27	.27	.27	56k	25k	
Example 2: 500 kHz									
calculated	10k	[5568.9 - (R_{fa}/2)]		[3.6 x 10^{-11}]					66826.8 Ω
Actual	10k	560 Ω	560 Ω	33 pF	33 pF	33 pF	56k	25k	

Table 1. Use good quality mylar capacitors and 5% resistors for filter performance. Example 1: 1 dB insertion loss and 62 dB notch @ f_o = 60 Hz. Pots used were PC thumbwheels, but R_{fa} can be panel mounted. Using actual values in example 1, null frequency at R_{fa} center = 59.9166 Hz. The filter is an RC phase shift type and works best in moderate- to high-impedance circuits (i.e., phono inputs, etc., of 50k to 1 meg). This can be used in loop of op amps like the twin-tee variety. Example 2: insertion loss = 1 dB; null = 42 dB.

filter allows me the brief following description of its operation. Picture the sine wave 60 Hz example entering the input. It travels through R_n and R_{na} and appears in phase at the output at some level dependent on the setting of R_{na}. Meanwhile, the same sine wave travels through Ca and R_{f1} + $R_{fa}/2$ to ground, causing a phase-shifted voltage to appear at the junction of Ca, Cb, and R_{f1}. This second voltage passes through Cb and R_{f2} + $R_{fa}/2$ to ground, causing a further phase shift at the junction of Cb, Cc, and the output load impedance to ground for the final shift. Ideally, this shift amounts to 180° at f_o (60 Hz), and the signals totally cancel each other at the output when R_{na} is adjusted to equal the amplitude passing through the capacitor string. Or, again ideally, (+V null leg) + (-V capacitor leg) = 0 V. Board leakage, component tolerance, etc., prevent the ideal as in most electronic circuits, but 40 to 60 dB+ isn't too shaggy!

Try your own ideas out, and don't be afraid of frequencies at least up to middle i-f range (500 kHz or so), as all mine seemed to do fine. Above this, leakage and shielding become a definite problem, but, if you are brave, plug on. My main reason for this article is to give you the idea and a PC board layout to play with. I'm sure that as hams you can imagine the rest. ■

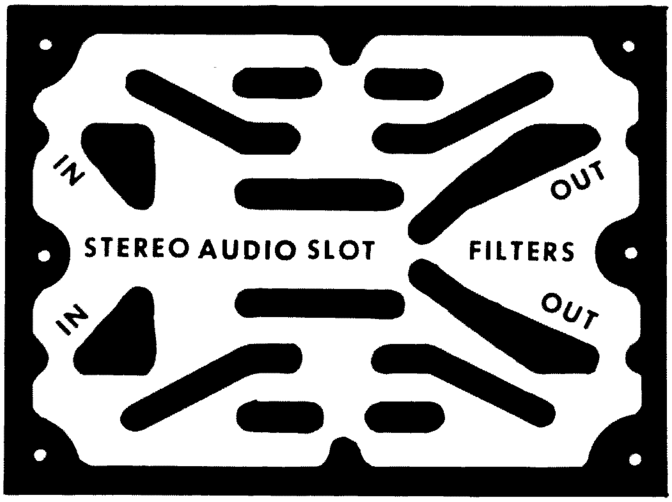

Fig. 2. Copper foil pattern.

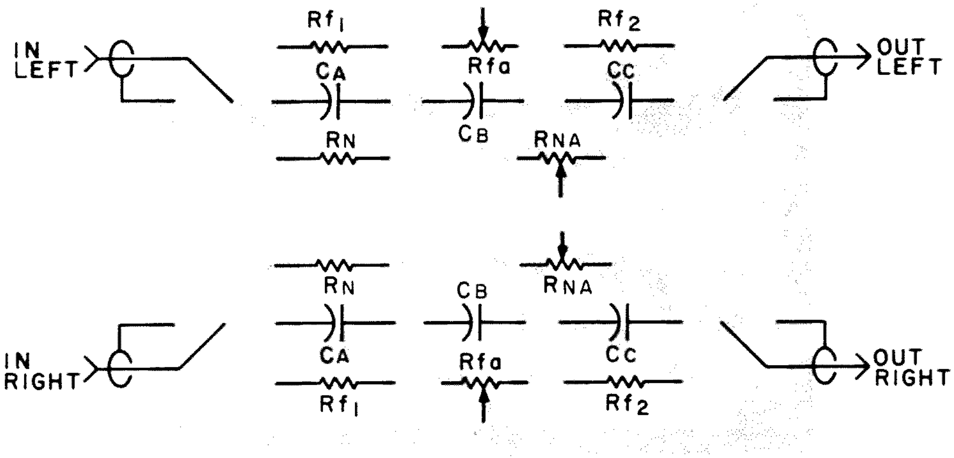

Fig. 3. Bottom view, copper side. Board may be split along lettering for two separate filter boards.

References

EE Designer, Spring, 1963.

Early GE design notes, date unknown.

WA5SNZ, *Ham Radio*, September, 1975, p. 16.

IRE Transactions, September, 1955.

General Radio Experimenter, July, 1961.

EEE Magazine, October, 1969.

Mike Kossor WA2EBY
13 North 12th Street
Kenilworth NJ 07033

The $5 Memory Keyer

—for lazy cheapskates

Sending CQ can become a tedious task. Some people really indulge and buy an auto-keyer with a memory to do the job for them. But, if you don't have at least one hundred dollars to spend, it's doubtful that you will find one at all.

The following project is not a keyer. It cannot be used with a paddle. However, it does have the capability of storing several hundred bits of information in its memory which can be used to key a transmitter with a key terminal voltage of up to four hundred volts and as high as six Amps, which covers just about all modern equipment on the market.

With a regular auto-keyer, many coils and complex circuitry are used to achieve its operation. The device described in this article is considerably less expensive than these units and will allow the operator to send CQ just as quickly and easily. Instead of complex circuitry, this device uses information stored on magnetic tape, which most of you probably already have.

The circuit takes audio pulses from a tape recorder and changes them into on-off keying pulses to key the transmitter. Therefore, whatever you can put on tape, you can put into the "memory" of this new tape keyer. Additionally, a repeating cassette tape can be used, so no rewinding of the tape is necessary. After the tape has completed the CQ, just stop it. If there is no answer, just start the tape again. However, a standard cassette will work fine.

Fig. 1. Block diagram.

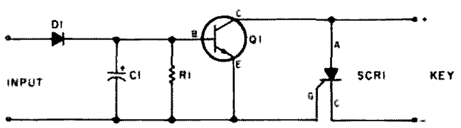

Fig. 2. Schematic diagram of the tape keyer. C1 — 1000 uF, 16 V dc electrolytic; D1 — 1N4004 diode; Q1 — RS 2020 (Radio Shack); R1 — ½ Watt, 22 Ohms; SCR1 — RS 1020 (Radio Shack).

Hookup and Operation

The tape keyer is assembled on a printed circuit board and enclosed in a small box. Parts placement is not critical, and the tape keyer may be hand wired, if desired.

A standard code practice oscillator is used for programming. CQ or anything else is recorded on the tape. Once programmed, the audio output of the tape recorder is fed into the tape keyer. The outputs of the tape keyer are connected to the key terminals of the transmitter (refer to Fig. 1, the block diagram). Polarity of the key terminals must be observed so that SCR1 stays reverse biased until turned on by Q1.

The volume of the tape recorder should be turned up until full keying is achieved and complete dots and dashes are heard. For best results, when programming the tape, record directly using no microphone from the oscillator output to the recorder's microphone input.

Circuit Theory

When the audio signal is positive at the anode of D1, capacitor C1 is charged and Q1 is forward biased. This turns SCR1 on and keys the transmitter. When the polarity reverses, C1 discharges, keeping Q1 forward biased. When the audio signal ceases, resistor R1 is used to discharge the capacitor at a fast rate, so that Q1 turns off, which stops SCR1 from conducting. ■

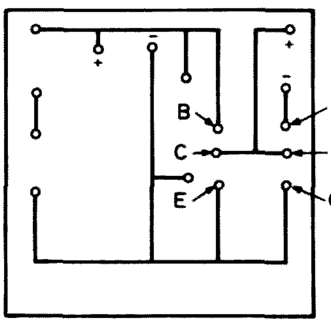

Fig. 3. PC board — foil side.

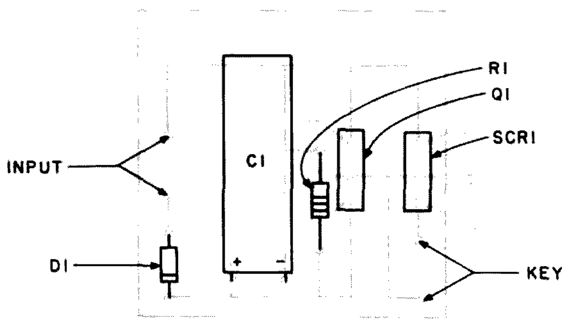

Fig. 4. PC board — parts placement.

Art Reis K9XI
8610 Ramble Rd.
Wonder Lake IL 60097

Should Repeaters Use Subaudible Tones?

—theological argument

This article was written with two purposes in mind. First, it tells the average VHF repeater user that PL need not be a barrier to accessing a local repeater, but can be a tool for improving the operation of both repeater and user station. Second, it is an approach to improving the problems of mutual repeater interference, particularly during band openings, which should be studied by repeater owners and repeater councils alike. Various aspects of this approach have been proposed by repeater councils and owners in the past, and a few machines are using something similar to this approach now. This article tells about two machines in Illinois, both on the same frequency pair, which have reduced their mutual interference by using the system described here.

Mention subaudible coded access or Private Line (PL)* to any mixed group of VHF repeater oriented hams, and you're likely to get widely divergent reactions. The average repeater user hates it, the average *private* repeater user or owner considers it to be God's gift to ham radio, and the average repeater control operator is likely to be ambivalent about it.

*Private Line is a trademark of Motorola, Inc. Other names for such continuous subaudible tone coded access systems are Channel Guard (GE) and Quiet Channel (RCA). Since amateurs are most familiar with the term PL, however, I will be using this throughout the article.

On the positive side, PL and its related coded access systems provide a means of keeping out transmissions that do not intend to access the system. This keeps the extraneous key-ups at bay and thus provides a measure of sanity insurance for the control operator. It also partially insures keeping the private system private. That is also a negative, to the outsider, but that argument is beyond the scope of this article.

On the negative side, there is the problem of emergency traffic attempting to access the system and the problems which that presents to the control operator involved. And, there are the twin hassles of the cost of PL (to the stingy) and the various problems involved in installing it in the average small VHF rig.

However, there are times when the repeater owner or control operator, especially in crowded repeater areas, sees the need for some form of coded access for his machine. Just think for a moment about repeaters located near seacoasts or other areas where tropo ducting on VHF is common. One tropo duct can equal one mess.

Here is how one repeater organization, with the help of another, took a big step toward resolving both the PL and the interference problems, to the benefit of both machines.

WR9ABQ is owned by the Valley Amateur Repeater Association (VARA) of Elgin, Illinois. Their two meter system operates on the 19/79 pair. Other "neighbor" repeaters on that pair are WR9ADF in Normal/Bloomington, WR8ABI at Oshtemo/Kalamazoo, and WRØAJC in Burlington, Iowa. In the early days of "ABQ," when the band would open up, users of these machines would unintentionally "drop in" on the Elgin machine's input frequency, with the usual disruptive results.

That's not happening nearly as often anymore. The technical committee at VARA, after facing these frustrations for some time but not wishing to "close" their repeater via PL, came up with the idea of using PL as a carrier squelch *loosener,* rather than as a squelch of its own. The user who keys up the machine using its PL frequency automatically buys himself an added 6 dB of carrier squelch threshold. That feature alone brings down the number of key-ups from distant, tropo-propagating stations which do not intend to access the system. Without the right PL, they have a much harder time getting in.

Any repeater which chooses to use the PL system just described has the flexi-

bility of choosing how much to loosen the squelch with detected PL or, rather, how much to tighten things down when carrier and no PL are present. How much is, of course, up to the individual repeater's particular interference situation. The best setting is determined experimentally.

In addition to the foregoing, WR9ABQ also makes judicious use of anti-PL, which, for the uninitiated, denies access for the user of the anti-PL tone rather than assures it. At the present time, WR9ABQ has one anti-PL frequency, which is the access tone frequency used at WR9ADF in Bloomington. Fixed stations and high-powered mobiles use this frequency both to enhance their chances of getting into their home repeater and as a courtesy to the next repeater on the same pair. Such users simply do not get into WR9ABQ. The people at WR9ADF have also installed their own anti-PL system, which is tuned to the VARA PL frequency. This results in a lot less mutual interference between these two repeaters than VARA faces from its other near neighbors on the frequency pair. As these other machines add their own PL frequencies in the future, VARA will add anti-PLs to complement them as well.

A couple of notes here. First, as you may have guessed, it is possible for a control operator at WR9ABQ to switch the repeater to PL-only operation with a simple control code. That this is very seldom necessary is a tribute to the effectiveness of the mode of PL use described here. Second, the proper PL tone, when received by the repeater, is regenerated at the output frequency for use by the tone-activated squelches of the local control stations. This prevents them (assuming they have PL decoders) from having to hear the outputs of other machines on the frequency during band openings – more sanity insurance.

None of these ideas are new, of course. However, the combination of these ideas seems to be something new to amateur radio repeater systems, and it's about time we seriously considered using it. The reason is compelling. In these days of crowded repeater channels, "PL-loosening carrier squelch" plus "anti-PL" can create a far more livable situation on a repeater for everyone concerned, including the user with PL, the user without PL, the control operator, everyone at the next repeater (assuming they have a like system), and, ultimately, the state or regional repeater council.

The key to all these good things, on a major scale, lies not just with the local machine, but also in two other directions: 1) cooperation from the other neighboring machines on the frequency pair, either on a one-to-one basis or through the state or regional repeater council, and 2) cooperation from the majority of repeater users, particularly the well-equipped VHF FM operator.

For example, WR9ABQ has been able to work out a cooperative agreement with the WR9ADF machine in Bloomington, wherein each machine's access PL tone is the other's anti-PL. As mentioned earlier, VARA hopes that the other nearby repeaters on its frequency pair (at least) will follow suit sometime in the near future.

State and regional repeater councils can be of great assistance here by drawing up a plan of PL assignments to go along with their frequency pair assignments. One idea is to divide up a state or region into PL areas, with each area having its own PL frequency. All open repeaters in that area would utilize the same PL frequency in a PL carrier squelch loosener system, along with anti-PLs for all the surrounding areas. Users would need only one PL frequency determining element (reed or twin-T) to work any open local repeaters, while reaping the full benefits of repeater communication. Or, a user could skip PL entirely (say, for operation outside of his home area) without danger of being completely shut out of repeater operation, though with reduced benefits. This eliminates the need for a "universal" mobile PL on all repeaters, as at least one state repeater council has proposed.

With 32 PL frequencies, there are certainly more than enough to go around for any given region or state to allocate for all of their discreet areas, with enough left over for the private repeater crowd. I envision using, say, six to eight of these PL frequencies for this purpose, since common sense dictates that "checkerboarding" of areas can cut down on the number of anti-PL reeds (or whatever) needed by any given repeater. Coordination of PL frequencies within a state or region should not be a problem with competent administration at the council level.

While we're on the subject of quality administration, it must be noted here that a plan of this sort cannot and will not effectively replace the use of common sense in frequency coordination at the council level. The two cooperating repeaters referred to in this article are one hundred twenty miles apart. Had they been closer than, say, eighty miles, this plan simply would not have worked. Any coordinator is asking for trouble when he tries to use this system to shoehorn coordinations for co-channel machines into the same area. Basically, we're trying to solve problems that are already here, rather than find an excuse to create new ones.

Cooperation by the well-equipped fixed station and the high-power mobile station is also essential. VHF repeater users are generally divided into two groups: the low-budget, low-power guy with the rice-box class rig and not much else, and the sophisticated, high-power fixed station or mobile. The latter usually has a lot of money sunk into frequency synthesis, amplifiers (upwards of a hundred Watts worth), and a superb antenna system, often with hard line feed. Too often, however, the one thing that money did not buy is a way to turn the power down, usually in a mobile situation. And, let's face it, it's impossible to try to adjust your power up and down, while you're driving, to accommodate for constantly changing terrain conditions. It just can't be done. However, the use of the PL system which is described here can provide the kind of control needed to keep your signal accessing only the machine you wish to access.

Even turning the beam at the fixed station cannot insure that your signal will stay out of an unwanted place, because of the number of minor side lobes in any directional antenna pattern (there are 44 such lobes in the typical 22-element blockbuster). Again, the answer is the PL system described in this article.

The experiences of WR9ABQ and WR9ADF have shown that PL can be used on a repeater without shutting out the non-PL user. These experiences suggest that the same idea will work just about anywhere that moderate repeater crowding is a problem. What is now needed is a determined effort by repeater councils (or in lieu of that, between repeaters on the same frequency pair) to coordinate and by repeater users to utilize some sort of PL plan to make such a system fully effective. It is not hard to do, and the ultimate reward is a saner time for all on those crowded repeater channels.

My sincere thanks to Bob Swoger K9WVY for his inspiration and assistance in the preparation of this article. ■

Rod Hallen WA7NEV
Road Runner Ranch
Box 73
Tombstone AZ 85638

RAMmed By Morrow

—ECONORAM III lauded

It wasn't long after I put my ECONORAM II (ER II) memory board into service that I decided that 8K was just not enough RAM. I was about to order another ER II when I saw the ad for the ECONORAM III (ER III). For the same price ($188), Thinker Toys* was selling an assembled 8K dynamic RAM board. Since I had not had any experience with dynamic memory boards, I ordered one.

*Thinker Toys, 1201 10th Street, Berkeley CA 94710.

Imagine my surprise when I received not only my ER III, but also a check for thirty-nine dollars, because the price had been reduced to $149! Thinker Toys' ad states a kit price of $159, which means that you have to pay a premium of ten dollars if you wish to assemble it yourself. How's that for a switch? If it won't work with your S-100 computer, a complete refund is offered.

In comparing it to the ER II, I find that they both are configured in 4K blocks that can be addressed separately anyplace in memory. ER II has a software and hardware read-only feature, while ER III can be protected only with a built-in switch. The ER III has on-board refresh which is transparent to the CPU. This means that it looks like a static RAM board, as far as the processor is concerned.

Whereas the ER II comes with a four-page instruction sheet, the ER III arrives with a twenty-six page manual. This manual has sections on theory, operation, memory diagnostic tests (in both hex and octal), parts, schematics, and assembly instructions. This last section seems superfluous. I can't quite see them selling too many kits.

Since ER III arrives completely assembled, all that is necessary to put it to work is to set the desired addresses on the switches and make sure that the read-write switch is placed on write. A long run of both my memory diagnostic test and theirs failed to indicate any problems, and none has shown up since.

Three advantages of dynamic RAM, as opposed to the static type, are higher bit density, lower power consumption, and lower cost per bit. I have used ER II and ER III interchangeably and have not noticed any differences between them. Apparently, neither has my processor.

ECONORAM II and ECONORAM III offer the memory buyer a choice of static or dynamic RAM and a very good value for his money. ■

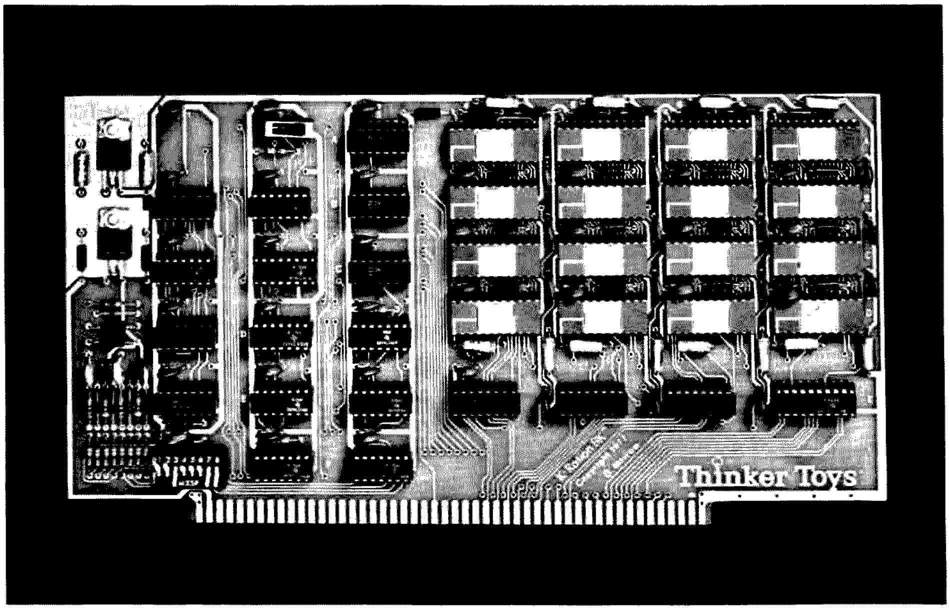

ECONORAM III 8K dynamic memory board. 4K memory chips can be seen in the upper right corner of the board. Note the lack of heat sinks on the voltage regulators. The low current requirements of the board make them unnecessary. Designed by George Morrow.

```
A048    0100                                Set program counter
0100    CE    0200                          LDX message pointer
0103    A6    00                            LDA A   0,X
0105    81    04                            CMP A   EOT
0107    26    06                            BNE
0109    7F    A049                          CLR
010C    7E    EOE3                          JMP   to control
010F    BD    E1D1                          JSR   OUTEEE
0112    08                                  INX
0113    20    EE                            BRA
0200    48    45    4C    4C    4F          HELLO
0205    20                                  Space
0206    49                                  I
0207    20                                  Space
0208    41    4D                            AM
020A    20                                  Space
020B    41                                  A
020C    20                                  Space
020D    53    57    54    50    43          SWTPC
0212    20                                  Space
0213    36    38    30    30                6800
0217    20                                  Space
0218    43    4F    4D    50    55    54    45    52    COMPUTER
0220    21                                  !
0221    04                                  EOT
```

Fig. 1. Program listing.

Six Said His First Word Today!

—and you taught him how

Charles E. Thomas WA3MWM
7022 Blackhawk
Pittsburgh PA 15218

The big moment is at hand. Your 6800-based microprocessor from Southwest Technical is finally assembled. You've sprung for the MP-68 computer and the CT-64 terminal with monitor. You are all set! You have convinced yourself you'll be satisfied with machine language for a long time or at least until your BASIC arrives.

Well, surprise! After running diagnostic programs through the memory ten different ways, it still hasn't done or said anything. Even tic-tac-toe is an anticlimax when it takes two hours to be typed in by hand.

This short machine-language program allows you to print out a short message on your monitor. To place a message in the computer, you must refer to the ASCII hexadecimal chart supplied with your documentation notebook. This is necessary to translate your message in English into the ASCII code. Just to be sure that you get the idea, I will provide you with an example. The program will print the message, "HELLO I AM A SWTPC 6800 COMPUTER!" The message can be as long as you wish — just be sure to terminate it with 04. This tells the computer the message is over.

The program instructions are found in memory locations 0100 through 0114. The actual message is found between locations 0200 and 0221.

Now it does do something! Now you have just begun . . . ■

```
*G HELLO I AM A SWTPC 6800 COMPUTER!
*
```

Fig. 2. Sample run.

Dave Lien W6OVP
8662 Dent Dr.
San Diego CA 92119

Dave Waterman K6MAR
834 Oak Lee Ln.
Alpine CA 92001

The 22S Programmer Program

—diode selection in BASIC

Here's a sure way to make a hit on your local two meter repeater. All you need add is a visiting Icom 22S owner without a diode matrix chart or a new owner anxious to program his new rice box. It beats trying to read the small print on the chart found in your instruction manual. Simply load this program into your TRS-80 microcomputer, and, as fast as the frequencies are entered, the exact diode placement for the matrix board is graphically drawn on the screen.

This program displays a drawing of the matrix board just as it exists in the IC-22S and then adds the diodes to the correct slots as you feed in the channel numbers and desired frequencies. It incorporates both math functions and graphics statements along with printed user instructions, yet only occupies about 2800 bytes of memory.

In Table 1 is a list of space-saving "Radio Shack shorthand" abbreviations used in this program.

F.	= FOR
G.	= GOTO
GOS.	= GOSUB
IN.	= INPUT
N.	= NEXT
P.	= PRINT
RET.	= RETURN
S.	= SET/STEP
T.	= THEN

Table 1.

Enough error messages have been inserted to keep you out of most jams you're likely to create as a result of this excitement. For instance, the program will not accept a request for more than 22 channels. It will only program frequencies from 146.01 MHz to 147.99 MHz, and it will not accept frequencies which do not meet the 15 kHz separation required by the IC-22S synthesizer. It also will not allow you to program the same channel twice during the same run.

Another feature of this program is automatic listing of each channel number on the matrix board display when you request programming of all 22 channels at one sitting. (You might as well let your computer handle this menial task.) If you choose to program fewer than 22 channels, then you are allowed to select the channel numbers at random. It will also display the frequency to the right of each channel row so you can refer back to a previously programmed channel.

The matrix board is split into two sections by the program. The first section (Fig. 1) shows the first 13 channels (about all you would want to program anyway), and the second section (Fig. 2) shows the remaining 9 channels. Don't worry about having to look through each of the first 13 channels to get to the last section; if you ask to program a channel between 14 and 22, it skips right into that section.

For the Computer Shrink

Analyzing the program, you can see that instructions have been compacted to conserve memory.

Lines 30 through 70 establish the number of channels to be programmed and verify that the number selected is compatible with the IC-22S capability. If all 22 channels are selected in one shot, line 50 jumps ahead to line 100 to eliminate nonpertinent instructions.

Line 150 initializes the values of J and U for later use. The FOR-NEXT loop at line 160 is the beginning of each successive programming run and only allows as many channels to be run as you initially entered as the channel number "P". If the condition at line 170 is not met (22 channels were requested to be programmed), then lines 180 and 190 take on the task of numbering each channel for you.

Line 200 is the error message which is called up when one of the conditions of line 223 is met. The FOR-NEXT loop in line 210 provides about 6 seconds delay to view this message.

Lines 220 and 223 establish the next channel number to be programmed. Line 225 checks to see if the channel you selected has already been programmed.

The A(1) to A(22) variables were initialized to zero back in line 52 (more about this later). If the condition of line 225 is not met, then line 226 prints the error message, and lines 227 through 229 allow you to select the next course of action. Line 229 erases the first part of the line which was printed by lines 226 and 227 before again writing the instructions at line 220.

Line 230 is an error message called up when one of the conditions of line 260 is met. Line 240 is another FOR-NEXT delay loop followed by J=J-1 which allows the same channel number to be displayed on the rerun. Line 250 establishes the next frequency to be programmed, which is checked by line 260.

Line 263 calls up the subroutine at 500 which checks the frequency selected to see if it is an increment of 15 kHz. If the frequency does not meet this requirement, an error message is displayed by line 510 and variable X is initialized to the value of 1. If line 263 finds X to be the value of 1 (it would normally be at the value of 3000 where it was last set by line 240), then the program again jumps back to line 240.

As the remark in line 265 states, lines 270 and 280 are used to determine if the first section of the board, containing channels 1 through 13, is to be displayed, or the second section, containing channels 14 through 22. Line 290 checks to see if the required section of board has already been printed. If the correct section has not been displayed (condition of line 290 has not been met), then line 300 will call up the subroutine at 600 to print it.

Lines 310 through 460 use the formula found inside of the IC-22S case. When any of the conditions are met to cause a diode to be placed on the board, a value for the

variable H is established which is used in the subroutine at 700 to print the diode at x-coordinate. In other words, "H" puts the diode in the correct column.

Line 470 is used to print the frequency in units of ones, tenths, hundredths, and thousandths of MHz. Line 470 protects against false answers showing up due to the subtraction process. You will find this procedure used throughout the program to keep it error free.

The value of variable W in line 470 is taken from line 730, which establishes the correct row to print the diode. Line 475 completes the FOR-NEXT loop initiated at line 160. When this FOR-NEXT loop has been completed, lines 480 through 490 allow the option of returning to line 20 and starting over or jumping ahead to a "locking loop" in line 999 to freeze the now completed diode display.

Conclusion

This program makes your TRS-80 computer an even more useful companion in the ham shack. Not only will you use it for the initial programming of your IC-22S, but also for changing existing channels. No longer will you have to search through the diode matrix chart to see if a frequency is IC-22S compatible or if it uses up your last remaining diodes.

Another advantage of using this program is its ability to display the diode matrix board with the diodes in place, before you actually solder them in. It's far easier to change diodes on the computer display than on the matrix board. ■

Fig. 1. Program listing.

```
10 REM IC-22S PROGRAMMED BY D.J. WATERMAN K6MAR 9/23/77
15 REM-COPYRIGHT (C) 1977 BY D.A. LIEN. ALL RIGHTS RESERVED.
20 CLS:P.TAB(14);" ** IC-22S MATRIX PROGRAMMER **"
30 P.:P.:IN." HOW MANY CHANNELS DO YOU WISH TO PROGRAM" ;P
40 IF(P<1)+(P>22)T.60
50 IF P=22T.100
52 F.N=1TO22:A(N)=0:N.N
55 G.80
60 P.:P." USE CHANNEL NUMBERS 1 THRU 22 ONLY."
65 F.X=1TO1000:N.X
70 G.30
80 CLS:P." TYPE_THE CHANNEL NUMBER TO BE PROGRAMMED,"
90 P." AND THEN THE FREQUENCY YOU WANT AT THAT CHANNEL." :G.110
100 CLS:P." TYPE THE FREQUENCY YOU WANT AT THE LISTED CHANNEL."
110 P.:P." NOTE. . YOU MUST ALWAYS TYPE THE LOWEST FREQUENCY"
120 P." OF THE DUPLEX PAIR. WHETHER IT IS A NORMAL"
130 IN." OR REVERSE SPLIT. PRESS ENTER WHEN READY" ;A$
150 CLS:J=0:U=0
160 F.S=1TOP
170 IF P<>22 T.220
180 J=J+1:C=J
190 P.AT(9);" CHANNEL" ;J:G.250
200 P.AT(9);" THE IC-22S ONLY HAS 22 CHANNELS,TRY AGAIN."
210 F.X=1TO 3000:N.X
220 P.AT(19);"  " ;P.AT(9);" CHANNEL #" ;
223 IN.C:IF (C<1)+(C>22)T.200
225 IF A(C)=0T.250
226 P.AT(0);" CHAN" ;C;" OCCUPIED." ;
227 P." EITHER 1-START OVER OR 2-SELECT A NEW CHAN" ;
228 IN.N:IFN=1T.20
229 P.AT(0);"            " ;:G.220
230 P.AT(9);" USE A FREQUENCY BETWEEN 146.01 AND 147.99 MHZ."
240 F.X=1TO 3000:N.X:J=J-1:G.170
250 P.AT(34);" FREQUENCY " ;:IN.F
260 IF(F<146.01)+(F>147.99)T.230
263 GOS.500:IFX=1T.240
265 REM T=1 PRINTS BOARD WITH CH 1-13,T=2 PRINTS CH 14-22
270 A(C)=C:IF C<14 T.T=1
280 IF C>13 T.T=2
290 IF T=U T.310
300 GOS.600
305 REM THIS SECTION DETERMINES DIODE PLACEMENT
310 G=(F-144.39)/.015:IF G<128T.330
320 H=0:GOS.700:G=INT(G-128+.1)
330 IF G<64T.350
340 H=14:GOS.700:G=INT(G-64+.1)
350 IF G<32T.370
360 H=28:GOS.700:G=INT(G-32+.1)
370 IF G<16T.390
380 H=42:GOS.700:G=INT(G-16+.1)
390 IF G<8T.410
400 H=56:GOS.700:G=INT(G-8+.1)
410 IF G<4T.430
420 H=70:GOS.700:G=INT(G-4+.1)
430 IF G<2T.450
440 H=84:GOS.700:G=INT(G-2+.1)
450 IF G<1T.470
460 H=98:GOS.700
470 X=INT((F-140)*1000+.1)/1000:P.AT(64*(W-11/3+56);X
475 N.S
480 P.AT(961);" DO YOU WANT TO PROGRAM ADDITIONAL CHANNELS" ;
485 P." (YES/NO)" ;
490 Y=1:N=2:IN.X:ON X G.20,999
500 X=F/.015:Y=INT(X+.5):X=(X-Y)*100+.1:Y=INT(X):IFY=0T.RET.
510 P.AT(9);F;" IS AN INVALID FREQUENCY." :X=1:RET.
600 REM THIS SUBROUTINE PRINTS MATRIX BOARD
605 IF T=1T.620
610 A=23:Y=14:G.630
620 A=14:Y=1
630 U=T:P.Y;
640 F.X=4TO47 S.7:P.TAB(X);" .  ." ;:N.X
650 P.TAB(53);" .  ." :Y=Y+1:IFY=A T.670
660 G.630
670 P.TAB(4);" D7" ;TAB(11);" D6" ;TAB(18);" D5" ;TAB(25);" D4" ;
680 P.TAB(32);" D3" ;TAB(39);" D2" ;TAB(46);" D1" ;TAB(53);" D0"
682 IF T=1 T.690
685 P.:P.:P.:P.
690 RET.
695 REM THIS SUBROUTINE PRINTS DIODES IN GRAPHICS MODE
700 IF T=1 T.730
710 IF C<14 T.730
720 C=C-13
730 W=1+C*3
735 F.X=8+HTO13+H:S.(X,W):N.X
740 RET.
999 G.999
```

Gordon W. Flemming WA6VIY
13490 Simshaw Avenue
Sylmar CA 91342

The Occult Computer

—test for ESP with a micro

As you can see from the absence of schematics or block diagrams, this is not a construction article. Many articles have appeared in hobbyist and professional computer magazines regarding interfacing to and from microcomputers. You can find data about communicating with a keyboard, a printer, a cassette recorder, and many other devices including your TV.

A big difference with the interface described here is that no additional hardware will need to be built. The interface is bidirectional, using the same "terminal" for input and output, and you already have the terminal. The data transfer rate is instantaneous.

The terminal is the most complicated data-processing device in existence — your

```
LIST


10 REM PROGRAM TO EVALUATE ESP
15 REM WRITTEN BY G.W.FLEMMING
20 REM 18 MAY 1977
25 CLEAR 100
30 DIM D$(25),C$(25)
40 Z=0:T=0
50 PRINT"   THIS PROGRAM IS USED TO EVALUATE THE POSSIBILITY"
55 PRINT"OF ESP ( EXTRA-SENSORY PERCEPTION ) IN AN"
60 PRINT"INDIVIDUAL. THE TEST IS PATTERNED AFTER TESTS"
65 PRINT"BEING RUN IN PARAPSYCHOLOGY LABORATORIES."
70 PRINT
80 INPUT"NAME OF PERSON DOING TEST";N$
90 PRINT"DO YOU WANT TO GUESS BEFORE OR AFTER THE"
95 INPUT"COMPUTER SETS-UP THE DECK (BEFORE OR AFTER)";A$
110 IF LEFT$(A$,1)="A" THEN GOSUB 500
113 PRINT
120 PRINT"YOUR GUESSES (* + = $ #):"
125 PRINT"  ....I....I....I....I....I"
130 INPUT G$
135 GOTO 1100
140 IF LEFT$(A$,1)<>"A" THEN GOSUB 500
200 REM COMPARISON ROUTINE
210 N=0
220 FOR I=1 TO 25
230 IF MID$(G$,I,1)=D$(I) THEN N=N+1
240 NEXT I
300 REM OUTPUT RESULTS
310 PRINT:PRINT"RESULTS:"
320 PRINT"NY DECK:   ";
330 FOR I=1 TO 25
340 PRINTD$(I);
350 NEXT I
360 PRINT
370 PRINT"YOUR GUESS:";G$
375 GOSUB 999
380 PRINT"YOU HAD";N;"CORRECT, WHICH IS";N/25*100;"%."
400 Z=Z+N:T=T+1
450 INPUT"ANOTHER TRY (Y OR N)";T$
460 IF LEFT$(T$,1)="Y" THEN 110
465 PRINT:PRINT
470 PRINT"THE RESULTS FOR ALL OF THE TRIES FOR ";N$
475 PRINT"ARE ";Z;"CORRECT OUT OF";T*25;"CARDS."
480 PRINT"THIS IS AN AVERAGE OF";Z/T/25*100;"%."
485 PRINT"REMEMBER, CHANCE WOULD BE 20%."
486 PRINT"TRY AGAIN SOME TIME....."
487 PRINT:PRINT:PRINT
490 END
500 REM ROUTINE TO CREATE A 25 CARD DECK
510 REM FIRST FILL DECK WITH LETTER A'S
515 FOR I=1 TO 25
520 D$(I)="A"
525 NEXT I
530 REM PLACE 5 *'S AT RANDOM IN DECK
535 FOR Q=1 TO 5
540 R=INT(25*RND(8))+1
550 IF D$(R)<>"A" THEN 540
560 D$(R)="*"
570 NEXT Q
600 REM PLACE 5 +'S AT RANDOM IN DECK
610 FOR Q=1 TO 5
620 R=INT(25*RND(8))+1
630 IF D$(R)<>"A" THEN 620
640 D$(R)="+"
650 NEXT Q
700 REM PLACE 5 ='S AT RANDOM IN DECK
710 FOR Q= 1TO5
720 R=INT(25*RND(8))+1
730 IF D$(R)<>"A" THEN 720
740 D$(R)="="
750 NEXT Q
800 REM PLACE 5 $'S AT RANDOM IN DECK
810 FOR Q= 1TO5
820 R=INT(25*RND(8))+1
830 IF D$(R)<>"A" THEN 820
840 D$(R)="$"
850 NEXT Q
900 REM FILL REMAINING CARDS AS #'S
910 FOR Q=1 TO 25
920 IF O$(Q)="A" THEN D$(Q)="#"
930 NEXT Q
940 REM RETURN TO PROGRAM WITH 25 CARD DECK
950 RETURN
999 REM ROUTINE FOR ADDING ↑ TO MARK CORRECT MATCHES
1000 FOR I=1 TO 25
1001 C$(I)=" "
1002 NEXT I
1005 FOR I=1 TO 25
1010 IF D$(I)=MID$(G$,I,I) THEN C$(I)="↑"
1020 NEXT I
1030 PRINT"RIGHT......";
1040 FOR I=1 TO 25
1050 PRINTC$(I);
1060 NEXT I
1070 PRINT
1080 RETURN
1100 REM ERROR ROUTINE FOR INPUT
1110 IF LEN(G$)<25 THEN 1150
1120 IF LEN(G$)>25 THEN 1180
1130 GOTO 140
1150 PRINT"YOU DID NOT ENTER ENOUGH CHARACTERS...TRY AGAIN."
1155 GOTO 120
1180 PRINT"YOU PUT IN TOO MANY CHARACTERS. ONLY THE FIRST"
1185 PRINT"25 WILL COUNT."
1190 GOTO 140
OK
```

Fig. 1. Program listing.

mind. People have dreamed for years of mental telepathy, reading someone's mind. Many have tried psychokinesis, controlling an object with the mind. (Haven't you tried to make a pair of dice come up with your number?)

In addition to those of us who are casually interested or amazed by such actions, many learned people have spent years scientifically investigating the phenomena. Foremost among these people is Dr. J. B. Rhine, who headed the parapsychology lab at Duke University for years. A check at your local public library should produce several of his books which are written for the layman.

These investigators have test data that show statistically that mental telepathy does exist. But, when it comes to suggesting why and how, your opinion is as valid as their ideas.

One laboratory test consists of trying to write down the correct order of cards in a well-shuffled deck. The cards are not the normal playing type, but consist of a deck of five each of five different symbols. Thus, a 25-card deck is used for testing. The law of averages says that a person should get five of the 25 cards correct.

The program described here will enable you to gather test data and form your own opinion about ESP (extrasensory perception). Run the test on yourself, your relatives, and friends. You will soon find that some people get consistently good results, and some people get consistently nominal results. (I'm one of the nominal types.)

This program simulates the random shuffling of the laboratory-type deck of cards. Some of the safeguards needed in the lab are not required. How can you visually peek at a memory word? There is no requirement for a person to look at the cards and mentally send the information to you. By the way, some people are good senders, and some people are good receivers. Check each person both ways.

Now let's look at the program. The REM statements should explain the operations, but the impact of some of the decisions on the test is not apparent. If you choose to have the computer set up the deck first, then the test is a test for telepathy — that is, you are trying to read the memory contents.

However, if you choose to go first, the test becomes one for psychokinesis — that is, you are trying to control the contents of the computer deck in the memory, not read it.

Program lines 500 through 950 create the computer deck by randomly placing the five cards of each symbol. The symbols were chosen to be as different as possible and to all be typed with the shift key pressed to make it simpler for persons not familiar with the keyboard.

You might want to experiment with a different set of symbols. You may find that you can "read" some symbols better than others. Keep a record to see if you are better able to "read" a particular symbol.

Program lines 999 through 1080 were added after running the main program a few times. Line 375 was added to access this routine. You might want to add a subroutine to keep a running total of the number correct for each of the symbols. You could modify the program to allow the person being tested to select his own five symbols.

You can either treat the program as a game or a research tool. You may start running the program as a game, but when results tend to be much better than average, you will begin to question what is happening.

Above all, have fun. ■

```
RUN
   THIS PROGRAM IS USED TO EVALUATE THE POSSIBILITY
OF ESP ( EXTRA-SENSORY PERCEPTION ) IN AN
INDIVIDUAL. THE TEST IS PATTERNED AFTER TESTS
BEING RUN IN PARAPSYCHOLOGY LABORATORIES.

NAME OF PERSON DOING TEST? LLOYD
DO YOU WANT TO GUESS BEFORE OR AFTER THE
COMPUTER SETS-UP THE DECK (BEFORE OR AFTER)? BEFORE

YOUR GUESSES (* + = $ #):
   ....I....I....I....I....I
? ==++**$$#+#$*=$$#**=+++=*

RESULTS:
MY DECK:    $+=*#$*+##+==$$*+=#=*#$+*
YOUR GUESS:==++**$$#+#$*=$$#**=+++=*
RIGHT......          '     '    '    '
YOU HAD 4 CORRECT, WHICH IS 16 %.
ANOTHER TRY (Y OR N)? Y

YOUR GUESSES (* + = $ #):
   ....I....I....I....I....I
? +=*+*=#$#$++===**#$#$#$
YOU DID NOT ENTER ENOUGH CHARACTERS...TRY AGAIN.
YOUR GUESSES (* + = $ #):
   ....I....I....I....I....I
? ==++**$$##+*=*=+$##$==*+$

RESULTS:
MY DECK:    #$=#$==*+$=#+$=#+****+$+#
YOUR GUESS:==++**$$##+*=*=+$##$==*+$
RIGHT......                   '       '
YOU HAD 2 CORRECT, WHICH IS 8 %.
ANOTHER TRY (Y OR N)? Y

YOUR GUESSES (* + = $ #):
   ....I....I....I....I....I
? ==++$$##**=+*$=##+=$*#+#$

RESULTS:
MY DECK:    =+*+#=$=*#=$**#++*$$$=#+#
YOUR GUESS:==++$$##**=+*$=##+=$*#+#$
RIGHT......'  '    ' ' '      '
YOU HAD 6 CORRECT, WHICH IS 24 %.
ANOTHER TRY (Y OR N)? N


THE RESULTS FOR ALL OF THE TRIES FOR LLOYD
ARE  12 CORRECT OUT OF 75 CARDS.
THIS IS AN AVERAGE OF 16 %.
REMEMBER, CHANCE WOULD BE 20%.
TRY AGAIN SOME TIME.....
```

Fig. 2. Sample run.

Victor R. Fricke
325 Ramapo Valley Road
Mahwah NJ 07430

A Baudot Program For Your Micro

—simulated Vegas visit

Anyone who has ever been to Las Vegas is familiar with one of the most fiendish machines known to the mind of man. This ubiquitous device, designed to separate the victim from his change, is the slot machine, alias the "one-armed bandit."

The slot machine is everywhere — casinos, motels, banks, restaurants, even (rumor has it) pay toilets. They are designed to accept coins of all denominations except pennies.

Since casino gambling has been approved by the New Jersey legislature, it will no longer be necessary for us east coast people to travel to Las Vegas to dispose of our spare cash.

However, with this program, it is possible to enjoy the thrill of victory and the agony of defeat at the hands of an inanimate object without the normally attendant cash flow problems. The money saved by using this program could easily pay for another peripheral for your computer.

I got the idea for this program when I was browsing through a paperback book entitled *Gambler's Digest*. The Wang 2200 minicomputer which I have been using had several gambling game programs on a diskette, but the one for the slot machine had some kind of bug in it which made it inaccessible (at least to me) on the floppy. I had been toying with the idea (no pun intended) of programming the Wang to simulate a slot machine, but I wanted it to be realistic. I needed a list of relative probabilities for cherry, orange, bell, etc., and the normal payoffs. I found them in the *Gambler's Digest*.

There are many different slot machine configurations. The one I used is typical of many. It has three reels, and each reel has twenty symbols. This leads to 20 x 20 x 20 = 8,000 possible combinations. A jackpot is three bars. Since the bar appears once on the first reel, three times on the second reel, and once on the third reel, there are 1 x 3 x 1 = 3 possible ways to hit the jackpot in 8,000 combinations. To get some idea of the house odds, consider the winning combinations and their payoffs as shown in Table 1. For each 8,000 dollars that go into the slot, only $5,957 are returned as

Fig. 1. Program listing.

```
10 REM*******SLOT MACHINE********

20 REM PROGRAM WRITTEN BY VICTOR R. FRICKE

30 REM BASED ON LAS VEGAS ODDS AND PAYOFFS

40 REM DATA FOR REELS 1,2,AND 3

50 REM 1=BELL, 2=CHERRY, 3=LEMON, 4=BAR, 5=ORANGE,
   6=PLUM

60 DATA 2,6,3,2,6,5,2,3,6,2,4,2,6,5,2,3,6,2,5,1

70 DATA 2,4,5,2,1,5,2,4,5,2,1,2,5,4,2,1,5,2,6,5

80 DATA 5,6,1,5,3,6,5,3,1,5,6,4,5,3,5,6,1,5,6,3

90 DIM S$(6)8,R(3,20),X$8,Y$8,Z$8

100 X1=700:A=1:B=1:C=1

110 D=100

120 REM SET UP LIST OF SYMBOLS

130 S$(1)="**BELL**":S$(2)="*CHERRY*":S$(3)="*LEMON**"

140 S$(4)="**BAR***":S$(5)="*ORANGE*":S$(6)="**PLUM**"

150 REM INITIALIZE REELS

160 FOR I=1 TO 3:FOR J=1 TO 20:READ R(I,J):NEXT
    J:NEXT I

170 REM INSTRUCTIONS

180 PRINT HEX(03):PRINT "I AM THE COMPUTER SLOT
    MACHINE."

190 FOR I=1 TO X1:NEXT I

200 PRINT :PRINT "I AM DIRECTLY CONNECTED TO THE
    PAYROLL COMPUTER."

210 FOR I=1 TO X1:NEXT I

220 PRINT :PRINT "WIN, AND I WILL PAY YOU HANDSOMELY."

230 FOR I=1 TO X1:NEXT I

240 PRINT :PRINT "LOSE, AND I SHOW NO MERCY."

250 FOR I=1 TO X1:NEXT I

260 PRINT HEX(03):PRINT "YOU ARE STARTING WITH A
    STAKE OF $100."
```

```
270 PRINT "TO START THE GAME, PRESS 'EXECUTE'.
    EACH TIME YOU"

280 PRINT  PRESS 'EXECUTE', YOU ARE FEEDING ME A
    DOLLAR AND"

290 PRINT  PULLING MY ONE-ARM"

300 INPUT A$

310 REM ROLL THE REELS

320 PRINT HEX(03):PRINT TAB(19);"===============
    ==========="

330 R1=INT(RND(1)*35):R2=INT(RND(1)*35)+R1:R3=
    INT(RND(1)*35)+R2:I=1

340 IF I>R1 THEN 370

350 GOSUB 840

360 A=A+1:B=B+1:C=C+1:GOTO 430

370 IF I>R2 THEN 400

380 GOSUB 840

390 B=B+1:C=C+1:GOTO 430

400 IF I>R3 THEN 490

410 GOSUB 840

420 C=C+1

430 I=I+1

440 IF A<21 THEN 450:A=1

450 IF B<21 THEN 460:B=1

460 IF C<21 THEN 470:C=1

470 GOTO 340

480 REM CALCULATE PAYOFFS

490 X$=S$(R(1,A)):Y$=S$(R(2,B)):IF C<>1THEN
    500:C=21

500 C=C-1:Z$=S$(R(3,C))

510 IF X$<>"**BAR***"THEN 550

520 IF Y$<>"**BAR***"THEN 550

530 IF Z$<>"**BAR***"THEN 550

540 D=D+85:GOTO 780

550 IF X$<>"**BELL**"THEN 600

560 IF Y$<>"**BELL**"THEN 600

570 IF Z$<>"**BELL**"THEN 590

580 D=D+18:GOTO 780

590 IF Z$="**BAR***"THEN 580

600 IF X$<>"**PLUM**"THEN 650

610 IF Y$<>"**PLUM**"THEN 650

620 IF Z$<>"**PLUM**"THEN 640

630 D=D+14:GOTO 780

640 IF Z$="**BAR***"THEN 630

650 IF X$<>"*ORANGE*"THEN 700

660 IF Y$<>"*ORANGE*"THEN 700

670 IF Z$<>"*ORANGE*"THEN 690

680 D=D+10:GOTO 780

690 IF Z$="**BAR***"THEN 680

700 IF X$<> "*CHERRY*"THEN 770

710 IF Y$<>"*CHERRY*"THEN 770

720 IF Z$<>"*LEMON**"THEN 740

730 D=D+5:GOTO 780

740 IF Z$="**BELL**"THEN 730

750 D=D+3:GOTO 780

760 REM PRINT RESULTS

770 D=D-1

780 IF D<200 THEN 800

790 PRINT "MY COIN TRAY IS FULL. PLEASE PUT SOME
    COINS IN YOUR POCKET.":GOTO 820

800 IF D>10 THEN 820

810 PRINT "SAVE A BUCK FOR CAB FARE, SUCKER!":STOP

820 PRINT "$";D;" LEFT"

830 GOTO 300

840 PRINT TAB(19);"!";S$(R(1,A));S$(R(2,B));S$(R(3,C));
    "!";HEX(0D)

850 PRINT HEX(0A);TAB(19);"========================";
    HEX(0D0C):RETURN

860 END
```

Combination	Reel 1	Reel 2	Reel 3	Total	Payoff	Total Paid
BarBarBar	1	3	1	3	85	255
BellBellBell	1	3	3	9	18	162
BellBellBar	1	3	1	3	18	54
PlumPlumPlum	5	1	5	25	14	350
PlumPlumBar	5	1	1	5	14	70
OrangeOrangeOrange	3	6	7	126	10	1260
OrangeOrangeBar	3	6	1	18	10	180
CherryCherryLemon	7	7	4	196	5	980
CherryCherryBell	7	7	3	147	5	735
CherryCherryAny	7	7	13	637	3	1029
Total amount paid in 8,000 tries						5,957
House odds 2043/8000 = 25.5%						

Table 1. Payoff combinations in 8,000 tries.

payoffs, giving the house an edge of more than 25%. And that doesn't take into account the fact that nearly all of the payoff money is fed right back into the machine.

Program Features

The program simulates the operation of a slot machine and keeps a running total of funds remaining. On the Wang 2200, it takes about 3.2K words of memory. Hex codes are used on the Wang for cursor control. HEX(03) clears the screen and homes the cursor (top left). HEX(0D) returns the cursor to the left end of the current line. HEX(0C) moves the cursor up one line. HEX(0A) moves it down one line. ■

Ham Help

May I take advantage of this column to put out a CQ for any YL pen pals (age 21-22)? I'd like to correspond with, and possibly meet, any YLs having an interest in ham radio. I am presently in the merchant navy working as an electronics officer on the large supertankers "drifting" between Europe and the Gulf states. As of yet, I haven't been allowed to work /MM but would very much like to do so, if it became possible. I'd also like to hear from any PET users in the USA, especially any with Morse/RTTY encoder/decoder software.

All replies will be answered.

Nigel R. Huntley G4CDU
212 St. Stephens Road
Saltash
Cornwall PL12 4NL
England

I would like to invite all hams employed by Hewlett-Packard to join with us at the Eastern Regional Repair Center (ERRC) and Sales Office, Paramus NJ, in the formation of an *active* H-P Amateur Radio Club. We are just getting started and are open to new members and new ideas. We have in mind nets, field days, and fun, as well as getting to know others in the worldwide H-P organization. Anyone interested in signing up and/or starting their own chapter should contact me at the ERRC.

Geoffrey K. Doll WB2KJF
H-P ERRC
Paramus NJ 07652

I desperately need any circuit diagrams, ideas, or technical suggestions for the construction of any audio oscillator, signal generator, or similar gadget that could transmit over short distances (300-400 feet) and be received at, or through, a mobile tape player. The gadget should be similar to a "wireless microphone," but for tape players. Basic modulation, such as a tone beep, would be more than enough.

Dennis P. Sladen VE3DPS
17 Glenshephard Dr.
Scarborough
Ontario M1K 4N2
Canada

I'm having problems hooking up my Tempo 2020 without causing TVI in my townhouse. The closely-run townhouse complex will not allow outside antennas, so I am relegated to a dipole, or something, in the attic. Also, I'm a Technician and desperately need someone to help me get in gear with my code, so I can upgrade. Can someone help this fledgling amateur?

Nolan E. Kienitz WB5WAX
497 Madison Drive
East Windsor NJ 08520
(609)-443-3433

Does anyone have any info on a surplus Navy TCS transmitter? I have one, and want to convert it to use on CW, as it does cover three of the ham bands. It uses two 1625s in the final, two 1625s as modulators, and three 12A6s, too. If you have anything on this transmitter and will mail it to me, I will purchase it from you by return mail. Anything helpful would be appreciated.

Olen Craig W6DIG
2248 Gale Ave.
Long Beach CA 90810

I am in need of a schematic and manual for a Knight Model T-175 6/10 meter linear amplifier. I have tried every place I can think of. This column is my last hope!

Charles Weatherbee WD4CGX
6220 E. 4th Ave.
Hialeah FL 33013

I would like to get in touch with licensed amateurs in the USA who are railwaymen like myself.

Martin Michaelis DK1MM
Waldvereinsweg 5a
D 8400 Regensburg
West Germany

I am looking for a schematic for a crystal receiver for the AM broadcast band—the simpler, the better.

Hersh Goldberg VE3JBU
PO Box 913 Sta. B
Ottawa
Ontario K1P 5P9
Canada

I need any information available (schematic, manual, etc.) on the ARC-33/RT-173 surplus transceiver. I'm particularly interested in modification for use on 220 MHz.

Tom Workman K0TW
8856 W. 68th Place
Arvada CO 80004

I'm looking for someone who can repair an old McElvoy (standard model Mac key) bug.

Tom Schlechte
1021 Hunt Ave.
Lakeland FL 33803

John M. Franke WA4WDL
1006 Westmoreland Ave.
Norfolk VA 23508

Norman V. Cohen WB4LJM
7719 Sheryl Drive
Norfolk VA 23505

VHF Notch Filter

—rejection can be beautiful

Having been reintroduced to VHF by modifying an old FM receiver to cover the weather satellite frequencies, I eagerly awaited crystals for a two meter FM rig that I had recently purchased at a hamfest. After plugging the crystals in and erecting a quarter-wave whip in my operating room, I was encouraged to hear the local 19-79 repeater come booming in. Waiting for a pause, I pressed the mike switch to call Norman WB4LJM for an air check. However, the immediate response was noise from the other side of the room.

The weather satellite receiver squelch was being keyed by overload from the two meter rig. It did not take long to determine that the two meter signal was entering the weather satellite receiver through its antenna, all other leads being shielded and filtered. Separating the satellite receiver antenna further from the two meter antenna to reduce coupling is nearly impossible, so I called Norman on the land line to see if we could cook up a filter for the weather satellite receiver. Our first thoughts were for a narrow bandpass cavity, but that idea was rejected for several reasons. First, I am basically lazy and could envision that as a several week project. Second, my operating room, the bedroom, has very limited space and my wife does not think that a copper pipe is as beautiful as I do. Third and finally, the high Q of such a filter would prevent using the weather satellite receiver to monitor police and other services without a coax switch. What was needed was a rejection filter tuned to 146.19 MHz.

A very effective rejection or notch filter can be formed from a wavemeter, i.e., a tuned circuit coupled to the transmission line to couple power out of the line at only one frequency. It was decided that high enough Q could be obtained by using coaxial lines for the resonators. A simple circuit was wired together in a minibox with BNC input and output connectors. Then Norman made a swept frequency response curve. The tap position was changed, and a new curve was measured. The fancy name for this cut-and-try development method is "an empirical investigation."

The actual circuit consists of a shorted one-eighth wave coaxial line that is capacitively tuned to resonance with a small trimmer. The input and output taps are made by cutting the cable and splicing it back together, as shown in Fig. 1. Fig. 2 is the response curve of the filter for various tap positions. The rejection bandwidth, or Q, becomes sharper as the tap is moved towards the shorted end of the coax. The final filter has an insertion loss of about 1.6 dB at 137.5 MHz and a rejection of almost 23 dB at 146.19 MHz. The insertion loss might be reduced if rigid coax having a solid outer conductor is used. The rejection frequency is tunable from 127 MHz to 163 MHz. This filter is easily constructed and will probably find more applications as more systems are added to my station. ■

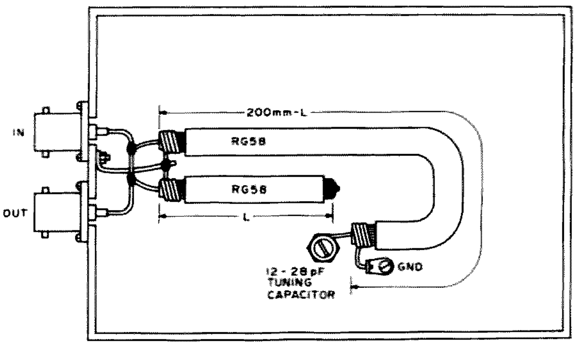

Fig. 1. Construction of the rejection filter.

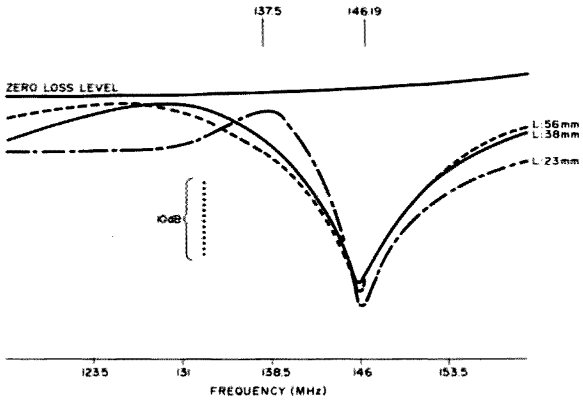

Fig. 2. Response of the filter for various tap positions.

Raymond Seiz K2DVQ
6 Marilyn Place
Rockaway NJ 07866

Yes, You Can Build A Synthesizer!

—220 MHz synthesizer for under $50

A host of articles published in the past years have stated, "Use it or lose it." They are referring to the 220-225 MHz amateur band.

The 550 Amateur Radio Club of Oakland, New Jersey, put a repeater on 223.34 MHz (in) and 224.94 MHz (out). I heard WR2AHD, and my interest in the 220-225 MHz band began. I found the choice of 220-225 MHz rigs limited. Using parts from my junk box and a few added dual-gate MOSFETs, I built a receiver with a first i-f of 10.7 MHz and the second i-f of 455 kHz. The transmitter consists of a modified VHF Engineering TX220B and PA220/15 power amplifier.

I did not want to limit my scope of operation to one or two frequencies. I researched the available synthesizer kit manufacturers in search of a 220-225 MHz synthesizer. As a result of the search, I decided to build my own.

The criteria of design were:

1. Cost – design goal less than $50;
2. Construction – T^2L – PC board;
3. Control switches must indicate frequency of operation in the 220-225 MHz band with 10 kHz steps;
4. Frequency synthesizer must operate in the car, i.e., +12 to 15 V dc;
5. Output frequency must be limited so that out-of-band signals cannot be programmed;
6. Receiver local oscillator injection is on the low side (high-side injection modification as per Figs. 14, 15, and 16).

The synthesizer output frequency was selected to drive the VHF Engineering TX220B transmitter kit. This kit requires 18 MHz crystals (18.333 to 18.750 MHz). The synthesizer output frequency is one-twelfth of the 220-225 MHz band. When used in the receive mode, the synthesizer output frequency is one-twelfth of the 220-225 MHz band minus 10.7 MHz. Receive range is 17.441666 to 17.858333 MHz. The format I decided upon is a heterodyne digital mixer with receiver digital offset.

Photos by John Maio WB2ARS and Matt Maio WB2LHG

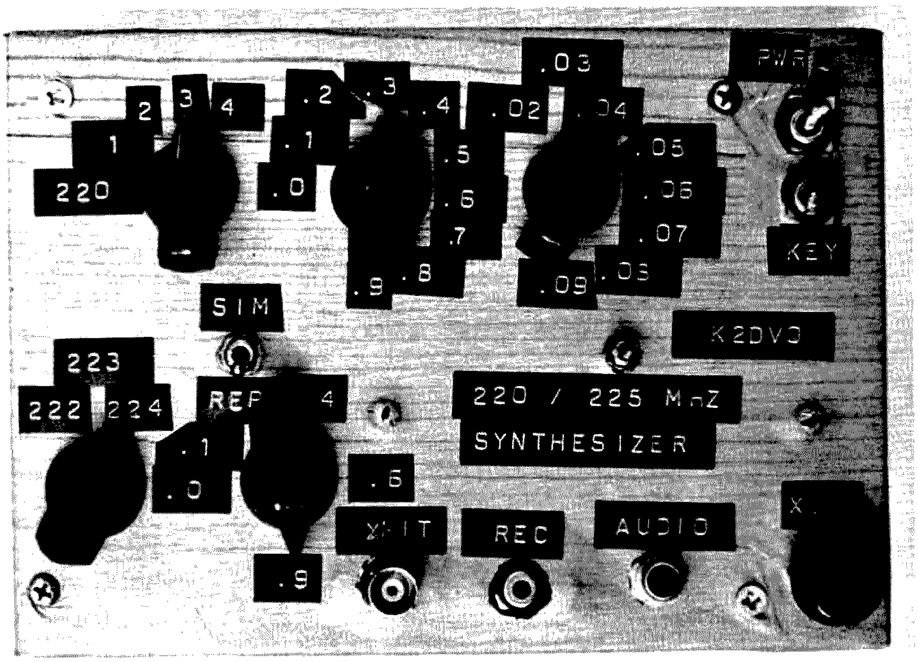

This photo shows the controls and input/output ports. The upper switches are set at 223.34 MHz, the transmitter setting. The synthesizer mode switch is in the repeat mode. The lower switches are set at 224.94 MHz, the receiver frequency. The upper .04 setting is common to both sets of switches. (Refer to Fig. 10.)

Theory of Operation

This frequency synthesizer generates frequencies from 17.441666 MHz to 18.750 MHz in 833.3333 Hz steps, selectable via the frequency select switches and the transmit/receive mode select signal. The output signal has the ability to be frequency modulated.

This synthesizer is a heterodyne mode phase locked system. (See Fig. 1.) Frequency stability is generated at the crystal reference oscillator. The frequency of the crystal oscillator is 19.083333 MHz. The output of the crystal oscillator is fed to the input of the ÷11,450 counter and to the digital mixer.

The ÷11,450 counter is programmed to count 11,450 pulses at its input and generate a pulse at its output. The counter resets itself after generating an output pulse and counts another 11,450 pulses. This cycle repeats. Each second, 19,083,333 pulses appear at the input and

19,083,333 ÷ 11,450, or 1666.6666, pulses appear at the counter's output terminal. The ÷11,450 counter output is fed to a single-shot chip where the pulse is conditioned and passed to one input of the phase comparator. This constant 1666.6666 Hz signal is the comparator reference signal. The output of the phase comparator is a dc signal which varies the frequency of the voltage controlled oscillator (vco). The output of the phase comparator will continue to change until the frequency and phase of the second input to the phase comparator are equal to the reference input. When and only when both inputs of the phase comparator are equal in phase and frequency, the output signal of the phase comparator will come to rest at some voltage and hold the output frequency of the vco constant. The phase locked mode now exists.

Transmit Mode

Frequency select switches are set to 224.00 MHz. When a ground is applied at the transmit/receive input jack, the synthesizer is in the transmit mode. The output of gate #3 is high (2.4 to 5.4 V dc), driving the control input of gate #1 high. With the frequency select switches set at 224.00 MHz, the 400-to-900 variable counter is programmed to count 500 pulses.

In the phase locked mode, the frequency present at the output of the programmable 400-to-900 counter must be 1666.6666 Hz. The input frequency at the 400-to-900 counter must be 500 times 1666.6666 Hz, or 833.333 kHz. The digital mixer output frequency must be ½ times 833.333 kHz, or 416.666 kHz.

At the output of the digital mixer is a low-pass filter which only passes the difference frequency between its two input signals. One input signal to the digital mixer is the crystal oscillator, 19.083333 MHz. The second input signal to the digital mixer is the vco frequency, 17.4 to 18.75 MHz.

The digital mixer output frequency equals 19.083333 MHz minus the vco frequency. Therefore, the vco frequency equals 19.083333 MHz minus the digital mixer output frequency. With the digital mixer output frequency of 416.666 kHz, the vco frequency must be 19.083333 MHz minus 416.666 kHz, or 18.666666 MHz.

The vco 18.666666 MHz signal is passed through a low-pass filter to the transmit output jack. This 18.666666 MHz signal is multiplied times twelve in the transmitter to obtain the final frequency of 224.00 MHz.

Receive Mode

Frequency select switches are set to 224.00 MHz. When the transmit/receive input jack is left open circuit, or a voltage up to +15 V dc is applied, the synthesizer is in the receive mode.

The reset state sets the output of the JK flip-flop to be high, +2.4 to +5.4 V dc. The output of gate #3 is driven low, 0 to 0.4 V dc. The control input at gate #1 is held low. The pulse train present at the signal input of gate #1 is inhibited and does not pass to the 400-to-900 counter until the control input of gate #1 is high. The pulse train present at the output of the x2 multiplier is fed to the signal input of gate #2. The pulse train is fed to the 1070 counter. When 1070 pulses are counted, the 1070 counter generates an output pulse which sets the JK flip-flop output low, driving the output of gate #3 high, and gate #1 is enabled. The pulse train at gate #1 will now pass to the 400-to-900 counter. After 500 pulses are counted, a reset pulse will reset both the 1070 and 400-to-900 counters. This cycle repeats again and again.

The frequency present at the output of the 400-to-900 counter must be 1666.6666 Mz. The frequency at the output of the times 2 multiplier is the sum of the two counters times 1666.6666 Hz, or 1666.6666 Hz (1070 + 500). 1666.6666 Hz x 1570 = 2.616666 MHz. The frequency at the output of the digital mixer is 2.616666 MHz divided by 2, or 1.308333 MHz. The vco frequency is 19.083333 MHz minus 1.308333 MHz, or 17.775 MHz. When this 17.775 MHz signal is multiplied times 12 in the receiver local oscillator/multiplier chain, it will produce a 213.3 MHz signal to the receiver's first mixer stage. 213.3 MHz is 10.7 MHz less than 224.00 MHz.

Therefore, using a receiver with a 10.7 MHz first i-f, having oscillator injection to the first mixer on the low side (i.e., injection frequency is below the frequency to be received), the receiver will be set to receive 224.00 MHz. The vco frequency is amplified and fed through the filter to the receive output jack. The signal does not pass to the transmit output jack in the receive mode.

Note: If an i-f frequency other than 10.7 MHz is desired, the 1070 counter can be reprogrammed to generate the offset. To compute the number of pulses to be counted, divide the i-f frequency by 10 kHz, i.e., 12 MHz ÷ 10 kHz = 1200. For a first i-f of 12 MHz, the counter is to be programmed to count 1200 pulses. The vco may be modulated to produce a true frequency modulated signal. Power required is 12 to 15 V dc, 400 mA.

Reference Oscillator

The reference oscillator is a single-stage (Q1) crystal oscillator. (See Fig. 2.) The crystal is parallel resonant

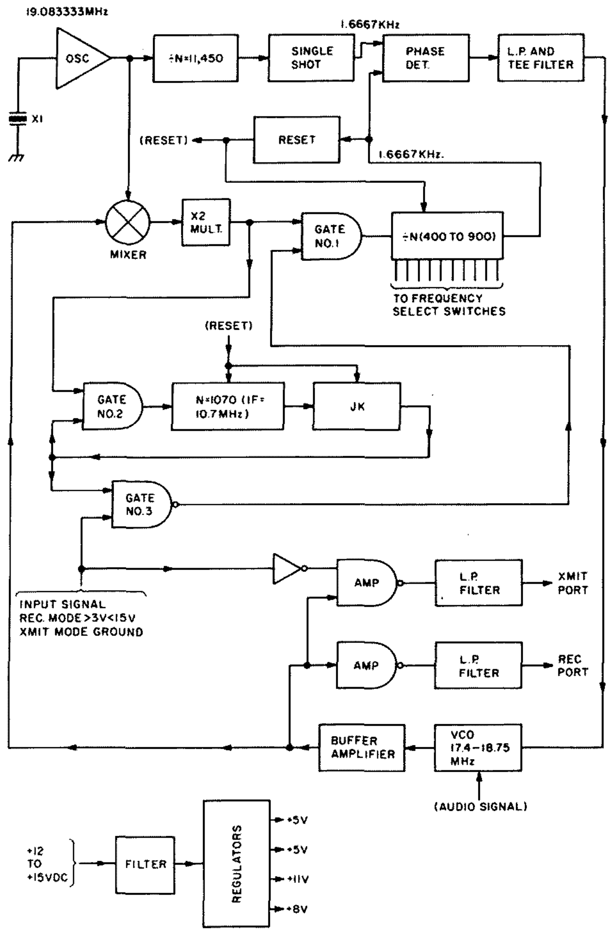

Fig. 1. Block diagram of 220-225 MHz frequency synthesizer.

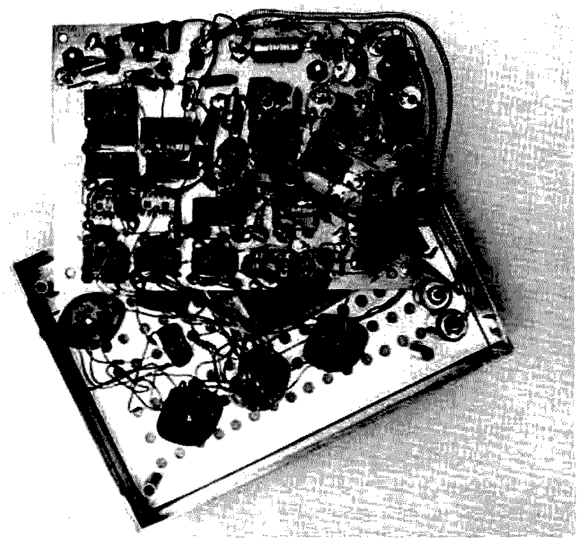

This photo shows the switches and part of the vco board which are below the main board. Some of the wires from the switches to the main board were cut in order to take this view. The holes shown in the bottom view of the top cover should not be there. This box was retrieved from my junk box and used to contain the synthesizer.

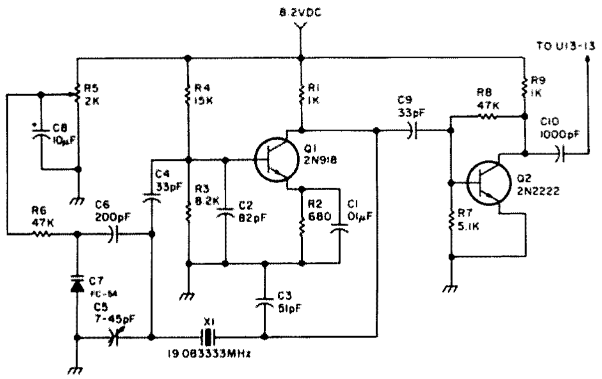

Fig. 2. Reference oscillator.

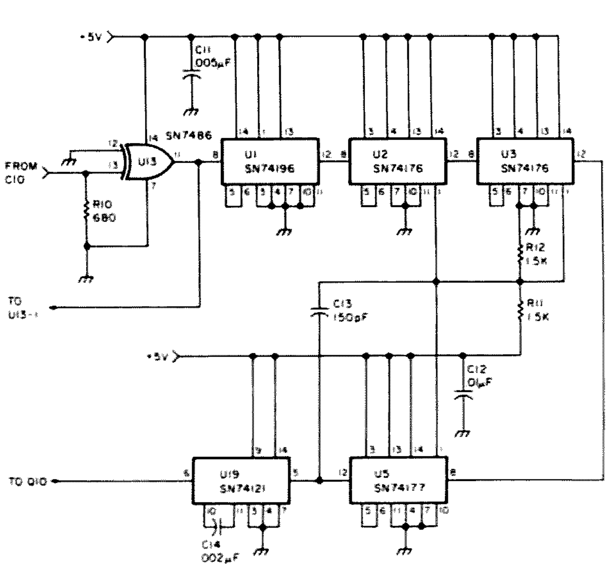

Fig. 3. Divide-by-11,450 presettable decade counter.

"AT" cut for the fundamental mode at 19.083333 MHz (19083.333 kHz). Cp = 32 pF.

The oscillator frequency is pulled or adjusted via the VVC diode C7. A 500 Hz change in oscillator frequency will change the frequency of operation (220 to 225 MHz) by ≈ 6 kHz. R5 controls the bias applied to C7. This adjustment is used to compensate for temperature changes as well as allow for split (5 kHz) channel operation.

Capacitors used were silver mica; C5 is a ceramic trimmer. Capacitor voltage ratings are not critical — any value greater than 25 V may be used.

Q2 is a buffer amplifier. Frequency at C10 is 19.083333 MHz ± Δf of 500 Hz.

Note: The value of R5 is not critical. Its range is 2k to 50k. C5 is adjusted with R5 near center range for 19.083333 MHz at C10. Unless otherwise specified, all resistors are ±5%, ¼ Watt.

The part (or equivalent) used from my junk box: C7 — FC-54 or 1N5144 or MV1404 or MV109 (same as C45).

÷11,450 Presettable Decade Counter

Refer to Fig. 3. The 19.083333 MHz signal is fed to U13-13, shaped, and fed to U1-8. U1 through U5 form a ÷N counter. U1 is operated as a straight ÷10. Due to the high input frequency, 19 MHz, any reset function at U1 would introduce counting error.

The frequency present at U2-8 is 19.083333 MHz ÷ 10, or 1.9083333 MHz. U2 through U5 form a ÷N of 1145. For every 1145 pulses present at U2-8, one pulse appears at U5-12. C13 couples the edge of each pulse at U5-12 to the reset gates of U2, 3, 4, and 5, pin 1.

The frequency present at U5-12 is the frequency at U2-8 ÷ 1145, or 1.9083333 MHz ÷ 1145 = 1666.6666 Hz. U19 is a single-shot used to condition the narrow pulse at U5-12. The signal at U19-6 is a pulse train; frequency is 1.666666 kHz.

Digital Mixer, Low-Pass Filter, x2 Multiplier

Refer to Fig. 4. The reference oscillator signal, 19.083333 MHz, is fed to U13-1. The vco signal, 17.441666 MHz to 18.750 MHz, is fed to U13-2. U13 is an SN7486 2-input exclusive OR gate. The output signal at U13-3 includes the difference frequency between the two inputs at pins 1 and 2. ($f_{pin\ 1} - f_{pin\ 2}$ = signal at pin 3.) To eliminate or reduce $f_{pin\ 1}$, $f_{pin\ 2}$, and $f_{pin\ 1} + f_{pin\ 2}$ present at pin 3, the output signal is passed through a low-pass filter consisting of R13, 14, and C15, 16, and 17. The 0.333333 MHz to 1.641667 MHz pulse train is amplified by Q6 and U13, pin 9 in, pin 8 out. The signal at U13-8 is fed to U11-11 and, via C20, to U12-12. The signal at U13-8 is inverted at U11-10 and fed via C19 to U12-13. The pulse train present at U12-11 is twice the frequency present at U13-8.

U12 inputs pins 12 and 13 are biased high (≈ 3 V), and U12, pin 11 is held high. When U13-8 goes low (changes state), the high-to-low transition is coupled to U12-12, and U12-11 will go low for ≈ 50 nanoseconds and return high. When U13-8 changes state from a low state to the high state, U11-10 will change from a high to a low state. This transition is coupled to U12-13, and U12-11 will go low for ≈ 50 nanoseconds. The signal at U12-11 is a pulse train consisting of 50 nanosecond pulses at a repetition frequency twice that present at U13-8. Frequency range at U12-11 is 0.666666 MHz to 3.283334 MHz.

Controllable Presettable Decade Counter

Refer to Fig. 5. U8, U9, and U10 are presettable decade counter chips. The data input pins, 3, 4, 10, and 11,

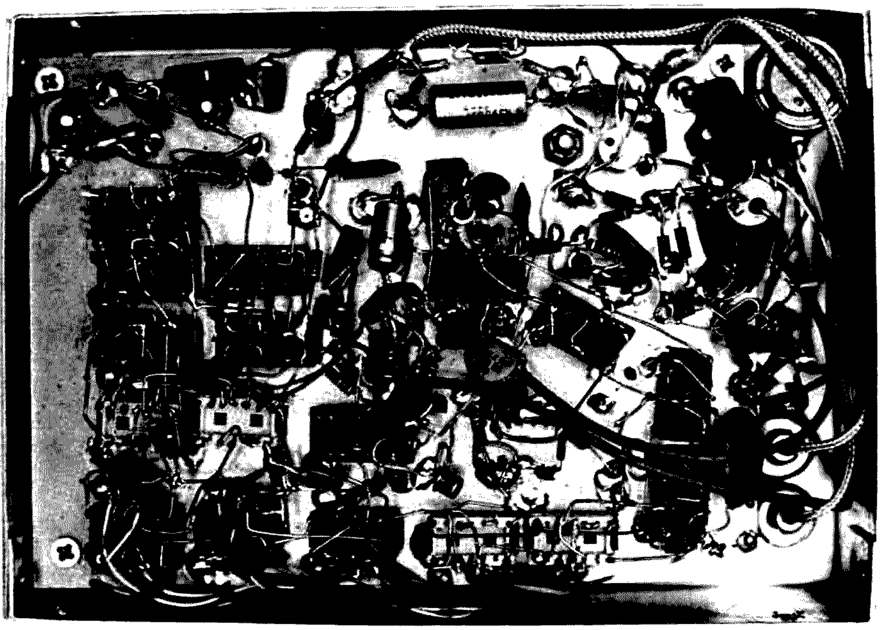

This photo is a close-up of the main board. You are looking down at the IC socket pins. See Fig. 12 for IC locations. This board is held above the frequency select switches on four standoffs.

are wired to the frequency select switches. These counters are so wired that when the frequency select switches are set to 220.00 MHz, U10, U9, and U8 will count 900 pulses, generate a pulse at U8-12, reset the data inputs, and then count to 900 again. With the frequency select switches set to 224.00 MHz, the counters are programmed to count 500 pulses and generate a pulse at U8-12.

N = number of pulses to be counted. The vco frequency = 19.083333 MHz - (1666.666 Hz x N)/2.

When N = 900, vco = 18.333334 MHz. 18.333334 MHz x 12 = 220.00 MHz.

When N = 500, vco = 18.666667 MHz. 18.666667 MHz x 12 = 224.00 MHz.

The signal at U12-1 is a pulse train within the frequency range of 0.666666 MHz to 3.283334 MHz. The signal at U12-2 is held high, 2.4 to 5.25 volts, in the transmit mode. In the receive mode, U12-2 is held in the low state, less than 0.4 volts, until the receiver offset counter of Fig. 9 sets U18-2 to the high state, which drives U12-2 high. The pulse train at U12-1 cannot pass to U12-3 with U12-2 held low. When U12-2 is at a high state, the pulse train will pass to U10-8 and be counted in U8, U9, and U10. When the counters count the number of pulses programmed via the frequency select switches, U8-12 will change state from a high of 2.4 to 5.25 volts to a low of less than 0.4 volts. This high-to-low transition is coupled to U11-1 via C32. A pulse of approximately 50 nanoseconds is generated at U11-2 and U11-4. This pulse is used to reset counters U8, U9, U10, U14, U15, U16, U17, and U18. There is more than ample time for the counters to be reset to their data inputs before the next pulse is present at U12-1. The maximum frequency at U12-1 is 3.283334 MHz, with a period of 304 nanoseconds.

Note: If cost is not a factor, use SN74LS196 chips in place of SN74176 chips at U8, U9, and U10. If you wish to save a few dollars, use selected SN74176 chips at U8, U9, and U10.

To select the ICs with low input current at the data inputs, build a test fixture consisting of a 14-pin IC socket and four 1k Ohm ±5% ¼-Watt resistors. Connect +5 volts to pins 1, 13, and 14. Connect ground to pin 7. Connect a 1k Ohm resistor to pin 3, pin 4, pin 10, and pin 11. The other end of each resistor connects to ground.

Install the SN74176 chip to be tested into the test fixture. Apply +5 volts. Using a high impedance voltmeter, measure the voltage drop across each 1k Ohm resistor. Any SN74176 with all four voltage readings below 0.6 volts is okay to use at U8, U9, and U10. Since you have taken the time to make the test fixture, record readings on all the SN74176 ICs, and use the three with the lowest readings at U8, U9, and U10. The remaining SN74176s can be used as required at U2, U3, U4, U5, U14, U15, U16, and U17. In these positions, the data inputs are hard wired to +5 volts or ground. The input current can be larger and not influence operation.

Phase Comparator, Low-Pass Filter, Twin-Tee Filter

Refer to Fig. 6. The signal

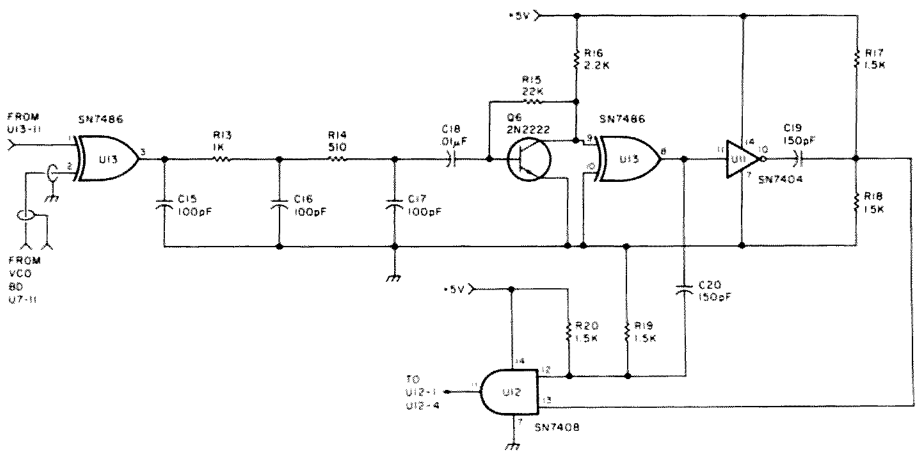

Fig. 4. Digital mixer, low-pass filter, x 2 multiplier.

at R34 consists of a pulse train at a 1666.666 Hz rate. This 1666.666 Hz signal is the phase comparator's reference signal. The signal at R36, when the system is in the locked condition, shall be equal in frequency and in phase to the reference signal at R34. Q10 and Q11 are level shifters. The output levels at U19-6 and U8-12 are TTL; each pulse changes from a low state of less than 0.4 volts to a high state of 2.4 to 5.25 volts. The input levels required at U6-3 and U6-14 are a low state of less than 2 volts and a high state of 8 to 11 volts. Q10 and Q11 switch levels between 0.2 volts and approximately 11 volts.

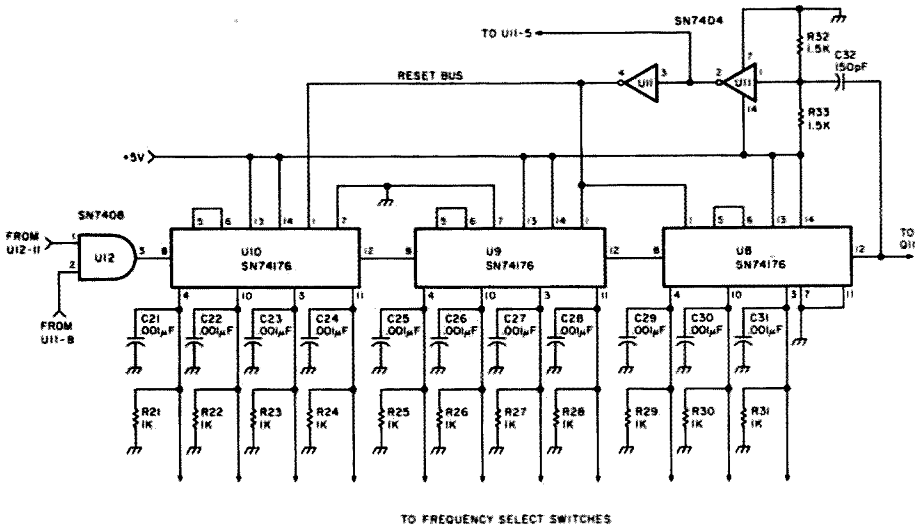

Fig. 5. Controllable presettable decade counter.

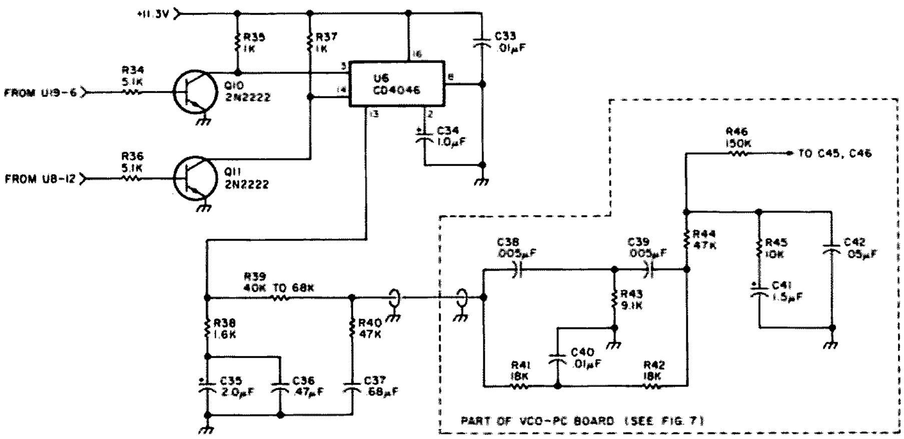

Fig. 6. Phase comparator, low-pass filter, twin-tee filter.

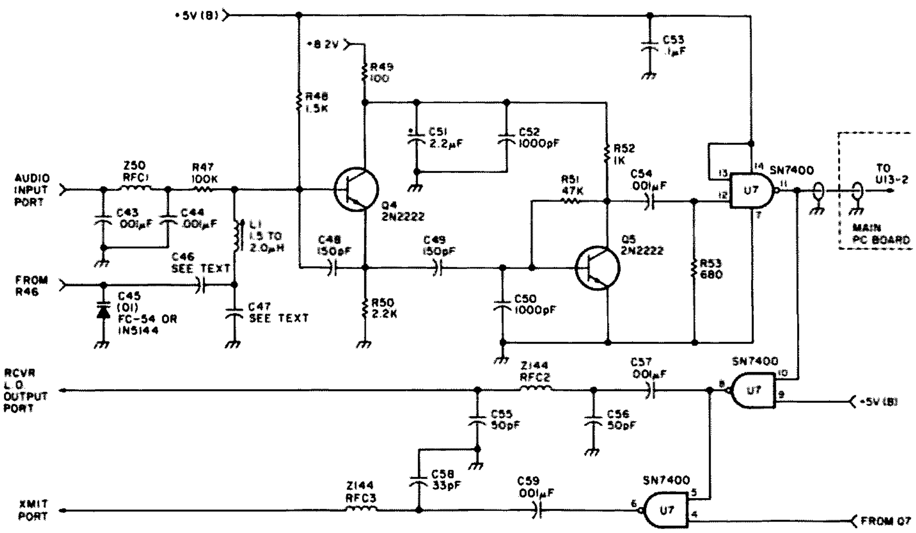

Fig. 7. Vco and output circuits (vco PC board).

U6 is a COS/MOS-type IC phase comparator. This chip compares the frequency and phase of the pulse trains present at its inputs, U6-3 and U6-14. If the input signals are not equal in frequency and in phase, the phase comparator output U6-13 is driven more positive or less positive. The phase comparator output is a dc bias voltage which is fed to C45, the vco VVC diode. As the voltage level at U6-13 changes, the bias on C45 changes, and the frequency of the vco changes. When the inputs at U6-3 and U6-14 are of equal frequency and they are phase locked, the output level at U6-13 will remain constant, holding the vco frequency constant until the operator changes the frequency select switches.

The output of U6-13 passes through a low-pass filter — R38, R39, R40, C35, C36, and C37. The signal then passes through a twin-tee filter to remove any 1666.666 Hz ripple present. The twin-tee filter consists of R41, R42, R43, C38, C39, and C40. R45, C41, and C42 comprise a charge storage network to hold the dc voltage constant until the next information update. R46 passes the dc level to the VVC diode, C45, while it isolates the capacity of C42.

Note: The value of R39 is 68,000 Ohms. If a value near 40,000 Ohms is used, response time is decreased with a trade-off in greater ripple present at C45. C34 was added to eliminate cross-talk present in the CD4046 chip.

Voltage Controlled Oscillator and Output Circuits

Refer to Fig. 7. Q4 is the voltage controlled oscillator (vco). This is a modified Clapp oscillator. The frequency determining components are L1, C45, C46, and C47. I selected a ¼-inch slug coil form and wound it for approximately 1.75 uH with the slug at its midrange. I used a known ±10% capacitor across the coil L1 and a grid-dip meter to indicate frequency of resonance. With L1 = 1.75 uH, at 18.75 MHz, C total = approximately 41 pF. At 17.44 MHz, C total = approximately 47.5 pF. The operational range of the bias applied to C45 is between 2 volts and 6 volts. The change in capacity of C45 is from approximately 15 pF at 2 volts to approximately 5 pF at 6 volts. Since only a 6.5 pF change in capacity is required to change the frequency of operation from 17.44 MHz to 18.75 MHz, the values of C46 and C47 were chosen with the total capacity across C47 in the range of 41 to 47.5 pF. Actual calculation required that C46 be 39 pF and C47 be 36 pF. I used two 18 pF capacitors in parallel for C47. L1 can be adjusted to bring the oscillator into range. If other VVCs are used for C45, use their curves of capacity vs. voltage to compute the capacity ratio of C46 and C47. A method of adjusting or testing the vco prior to closing the loop is to disconnect R46 at C45, connect a 50k Ohm pot to +8.2 volts and ground, connect a 100,000-Ohm resistor to the arm of the pot, and connect the other end of the 100,000-Ohm resistor to C45. Use a voltmeter to monitor the voltage at the arm of the pot. Adjust it for approximately 2 volts, and adjust L1 for approximately 17.4 MHz. The frequency measurement source may be a counter, an allband receiver, or a grid-dip meter. Adjust the pot for approximately 6 volts. Frequency of the vco should be greater than 18.75 MHz, but less than 19.0 MHz. Balance L1, C46, and C47 as required. Remove the pot and the 100,000-Ohm resistor. Connect C45 to R46.

The vco can be frequency modulated by applying approximately 0.5 volts of audio at the audio input port. The audio source must be capacitive coupled, or you must add a .1 uF capacitor in series with RFC1. Q5 is a buffer amplifier. The signal at U7-11 is fed to the main board at U13-2, which is ½ of the mixer input. (See Fig. 4.) The output at U7-8 is fed through a low-pass filter to the receiver output port. The control signal at U7-4 is high, 2.4 to 5.25 volts, only when a

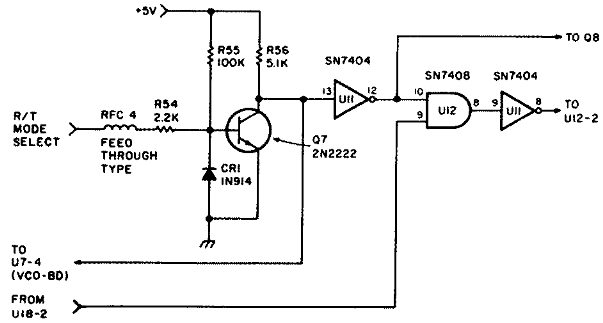

Fig. 8. Transmit/receive mode control circuits.

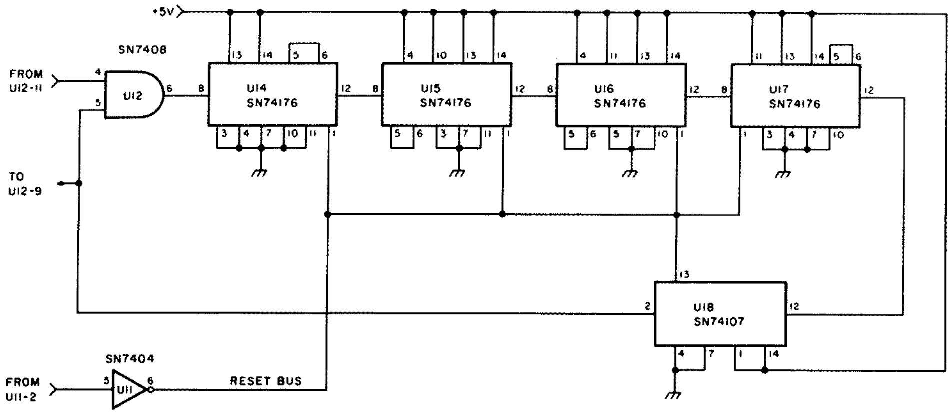

Fig. 9. Receiver offset presettable decade counter (i-f of 10.7 MHz).

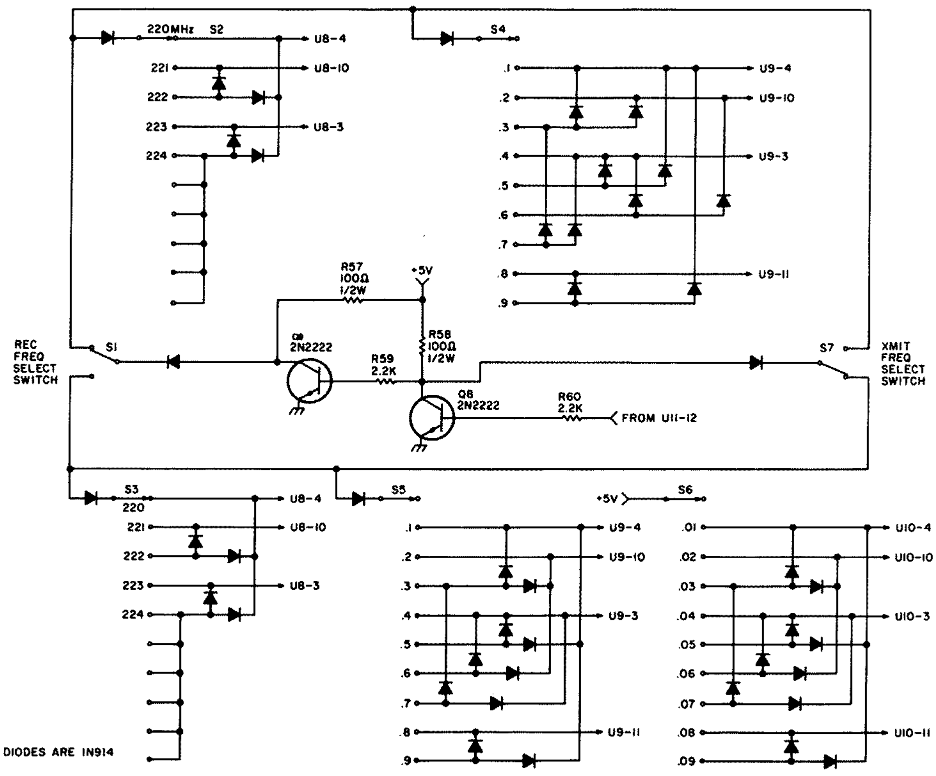

Fig. 10. Frequency select switching.

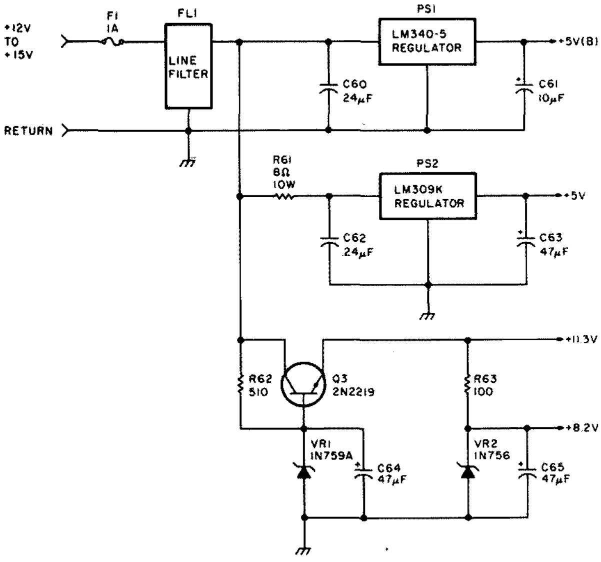

Fig. 11. Voltage regulators.

ground is present at the R/T mode port. A ground is present at the R/T mode port only in the transmit mode. (See Fig. 8.) Only in the transmit mode is the vco signal present at U7-6 and at the transmit port.

Note: I used G.E. clear silicone compound to reduce vibration effects. Coat L1 and all components in the area of L1. The parts (or equivalent) I used from my junk box are:

Audio input port – RCA phono jack;
Receiver L.O. output port – BNC chassis mount;
Transmit port – BNC chassis mount;
RFC1 – ohmite Z50;
RFC2, RFC3 – ohmite Z144;
C45 (D1) – FC-54 Fujitsu, Nissho America Corp., 80 Pine Street, New York NY 10005; or 1N5144, MV1404, or MV109.

Transmit/Receive Mode Control Circuits

Refer to Fig. 8. The range of signal levels to be applied at the R/T mode select port is zero or ground to 15 volts or an open circuit. In the receive mode, the R/T mode port should see an open-circuit condition, or you can apply a voltage between 3 and 15 volts. In the receive mode, Q7 is in the on state; Q7's collector is at less than 0.4 volts. U11-12 is at a high state, 2.4 to 5.25 volts. In the transmit mode, a ground is applied at the R/T mode port. Q7 is in the off state, and its collector is at a level between 2.4 and 5.25 volts. U11-12 is low, less than 0.4 volts. In this mode, U12-8 is held low, and U11-8 is at a high state, holding U12-2 high. U12-2 is the count-enable gate to the controllable presettable counter. (See Fig. 5.)

In the receive mode, the level at U12-9 is held high until the receiver offset counter counts 1070 pulses and U18-2 is driven low. U12-8 then goes low and drives U11-8 high, which enables the controllable presettable counter.

The part (or equivalent) used from my junk box is: RFC4 – Erie, part number 1270-009, 1270-024, or 1201 or 1202.

Receiver Offset Presettable Decade Counter

Refer to Fig. 9. The signal at U12-11 is a pulse train. The frequency of the pulse train varies between 666,666 Hz and 3.283334 MHz. This signal is fed to the input gate of U12-4. With U18 in the reset mode, U18-2 is at a high state, and U12-5 is at a high state. The pulse train at U12-4 will pass to U12-6 to be counted by U14, U15, U16, and U17. When U17-12 changes state, U18-2 will go to the low state and remain low until a reset pulse is present at U11-5.

As shown in Fig. 9, U14, U15, U16, and U17 are wired to count 1070 pulses. Each pulse at U12-4 has the effect of a 10 kHz offset at 220-225 MHz. The effect of adding the presettable counter to the controllable counter (see Fig. 5) is to force the vco in the receive mode to change frequency by a fixed amount. The fixed amount of offset is equal to the receiver's first i-f, 10 kHz.

As an example, set the frequency select switches to 224.94 MHz. In the transmit mode, the vco frequency is 224.94 MHz/12, or 18.745 MHz. In the receive mode, the vco must shift to (224.94 MHz - 10.7 MHz)/12, or 17.853333 MHz. For any frequency selected, the -10.7 MHz term is a constant. The vco in the receive mode will be forced to shift lower due to the phase comparator seeking locked condition. The frequency at U6-14 must equal the frequency at U6-3, which is a constant 1666.666 Hz.

As the offset of 1070 pulses is added to the scaled count of U8, U9, and U10, the frequency at U12-11 must increase. The frequency out of the mixer U13-3 can increase only when the frequency difference between U13-1 and U13-2 increases. The signal at U13-1 is a fixed 19.083333 MHz from the crystal oscillator. Therefore, the vco frequency at U13-2 must be driven lower.

If your receiver has a first i-f other than 10.7 MHz, the counters U14, U15, U16, and U17 must be reprogrammed: i-f/10 kHz = number of pulses to be counted.

As an example, if an i-f of 12 MHz is used, 12 MHz/10 kHz = 1200 pulses, and U14, U15, U16, and U17 must be programmed to count 1200 pulses.

This scheme as shown is for low-side injection. Frequency at mixer U13-3 = (1666.666 Hz x N)/2. Frequency of the vco = 19.083333 MHz - frequency at U13-3. N is the total number of pulses that the counters are programmed to count.

Frequency Select Switching

Refer to Fig. 10. The data input code required to pro-

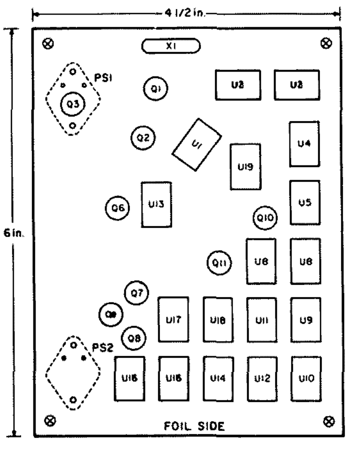

Fig. 12. Main circuit board IC layout.

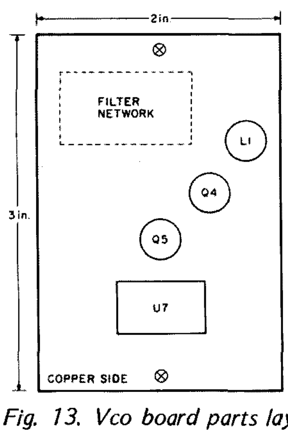

Fig. 13. Vco board parts layout.

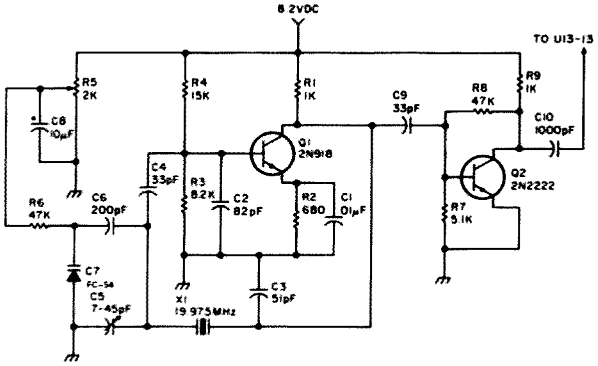

Fig. 14. Reference oscillator (high-side injection).

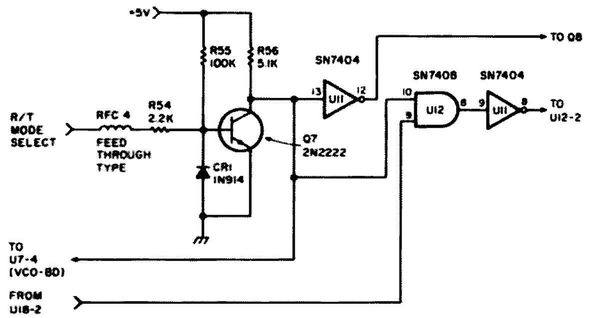

Fig. 15. Transmit/receive mode control circuits (high-side injection).

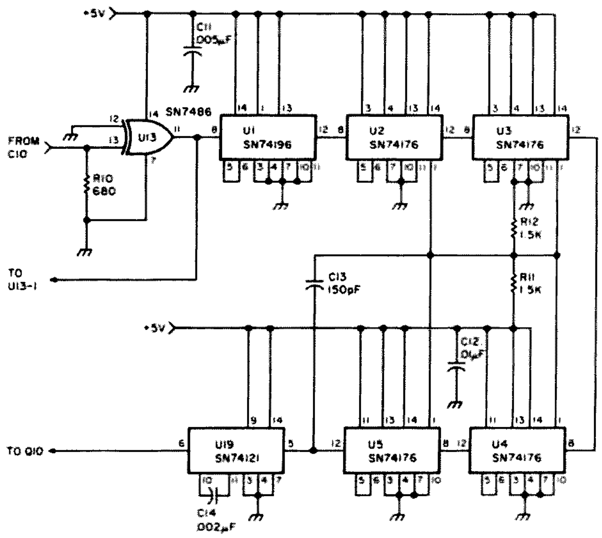

Fig. 16. Divide-by-11,985 presettable decade counter (high-side injection).

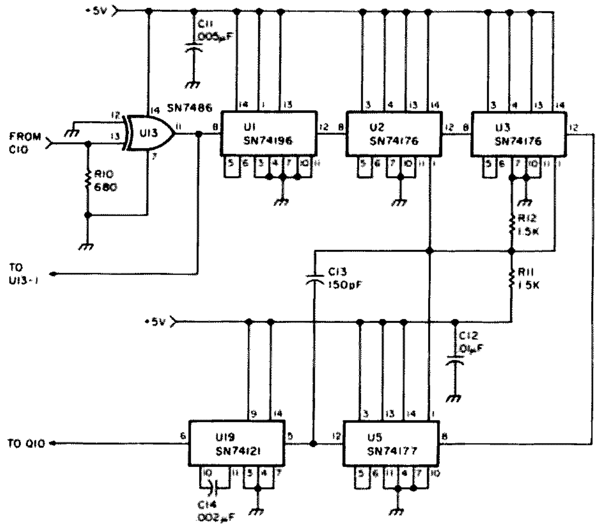

Fig. 17. Divide-by-11,450 presettable decade counter — alternate circuit to replace Fig. 3. This circuit requires one less chip (U4).

gram the presettable decade counters U8, U9, and U10 of Fig. 5 is binary coded decimal (BCD). I did not locate BCD switches for less than \$2.00. I purchased five single-pole 10-position switches for \$0.99 each from Radio Shack. Using the diode-switch scheme shown in Fig. 10, the switches were converted to BCD. Only five switches were used. The .01 MHz switch, S6, is common to both banks of switches. Another switch can be added to the S2, S4 bank wired as S6 is, with a diode in series with its arm common with the diodes from the arms of S2 and S4. Add a diode in series with the arm of S6, and wire its anode to the anodes of the diodes from the arms of S3 and S5. Now the operator can offset both transmit and receive frequencies in the 0.01 MHz range.

The REC select switch, S1, selects the frequency in the receive mode. The XMIT select switch, S7, selects the frequency in the transmit mode. The operator sets the transmit and receive frequencies as a direct readout of the frequency select switches. With S2 set to 2, S4 set to 3, and S6 set to 5, the frequency of operation is 222.350 MHz. With S3 set to 3, S5 set to 5, and S6 set to 0, the frequency of operation is 223.500 MHz.

In the receive mode, 2.4 to 5.25 volts is applied to R60. Q8 will conduct and Q9 will be off. When Q9 is off, greater than 3 volts is applied at the arm of S1. The data gates of U8 and U9 will then come under control of S2 and 4 or S3 and 5, as controlled by the position of S1. In the transmit mode, Q8 is off and Q9 is on. Between 3 and 5 volts is applied to the arm of S7. The position of S7 will select the frequency code to be sent to U8 and U9. When Q8 is on, Q9 is off, and when Q8 is off, Q9 is on. In the on state, less than 0.4 volts is applied to the diode at its collector, so the switch connected to the on transistor has no effect on the frequency programming.

Power Requirements

See Fig. 11. TTL logic requires 4.75 to 5.25 volts. Two 5-volt regulators were used. One would be ample, but I used a second 5-volt regulator to power the vco output chip. R61 is not required if PS2 is attached to the metal frame, heat sink of the synthesizer. I mounted PS2 to the PC board. R61 will limit the power dissipation of PS2. FL1 is a line input filter. Q3 is an emitter follower used to generate and filter the 11.3-volt source. This synthesizer was designed to operate from a source of 12 to 15 volts.

The part (or equivalent) used from my junk box is: FL1 — Erie, low-pass/high-frequency filter, type 1270-009, 1270-024, or feed-through-type 1201 or 1202, etc.

Construction

Refer to Figs. 12 and 13. The transistors and the integrated circuit chips (IC) are mounted on two copperclad boards. The copper is used as a ground plane. The ICs are

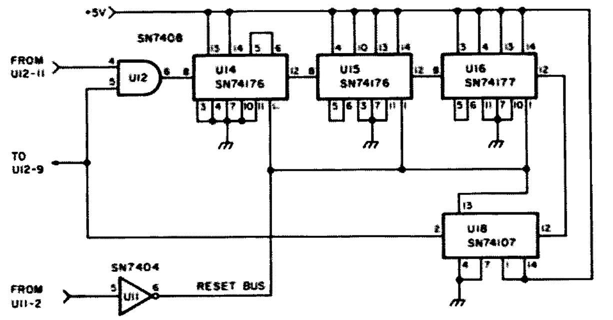

Fig. 18. Receiver offset presettable decade counter (i-f of 10.7 MHz) — alternate circuit to replace Fig. 9. This circuit requires one less chip (U17).

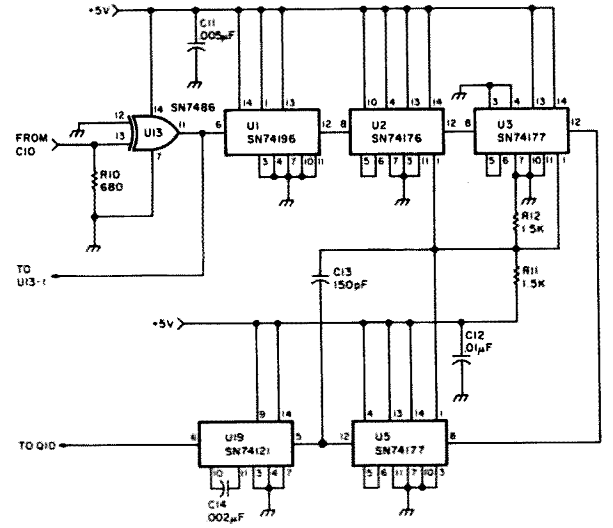

Fig. 19. Divide-by-11,985 presettable decade counter. This circuit is used with high-side injection. It is an alternate circuit to replace Fig. 16. This circuit requires one less chip (U4).

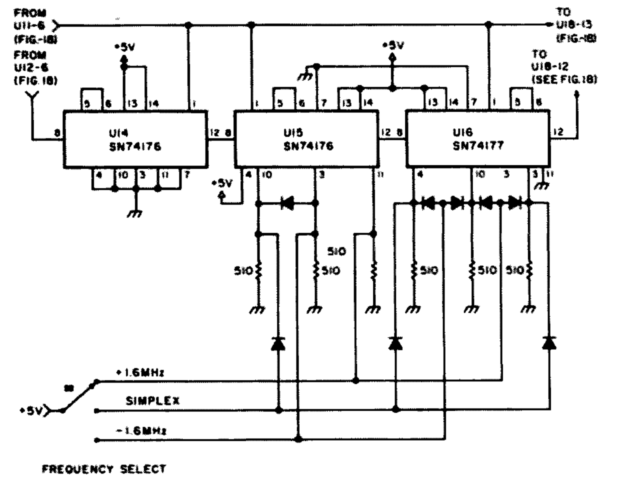

Fig. 20. Alternate circuit to eliminate the second set of frequency select switches. This circuit allows one switch selection of repeater or simplex modes (i-f 10.7 MHz). Note: Diodes are 1N914. Resistors are 510 Ohms, ±5%, ¼ W. Add .001 µF across each 510Ω resistor.

installed in 14 or 16 pin dual in-line sockets, then mounted upside down. The IC top is up against the copper with the socket pins up away from the board. All ground connections are as short as possible from the copper ground plane to the ICs' socket pins. The ground connections hold the ICs to the board. The 5-volt regulators are mounted to the main copperclad board. Due to ground loops, the vco and the output IC (U7) are located on a small separate copperclad board. I suggest that this vco board be mounted in the enclosure to position the coil (L1) form parallel to the Earth's surface when in use. The vco frequency is less susceptible to shock or vibration with the coil windings perpendicular to the direction of induced shock.

The two boards were mounted in a 5" x 7" x 3" aluminum box with a bottom plate. The frequency select switches are accessible at the top. I did not experience the presence of rf feedthrough problems when driving the 15-Watt transmitter.

The enclosure should be rf tight. Use rf feedthrough decoupling for both power and mode select (transmit/receive) inputs.

Note 1 — Crystal Oscillator R5 Adjustment

Crystal oscillator R5 adjustment is made using the receiver audio or discriminator meter as a guide.

Note 2 — Receiver High-Side Injection

If your QTH is in an area where television transmission in the 198 to 204 MHz range presents image problems, you can shift the image frequency above 240 MHz by using high-side local oscillator injection in the receiver. The following changes are required to convert the synthesizer to high-side injection for use with a receiver with a first i-f of 10.7 MHz:

1) Crystal X1 should be 19.975 MHz, parallel mode, 32 pF load capacity, fundamental mode.

2) Program the presettable decade counter to ÷11,985 as follows:
Remove the jumper between U1 pins 5 and 6;
Remove the input at U1-8 and connect it at U1-6;
Remove the connection at U2-3;
Remove the connection at U2-10;
Connect U2-3 to ground;
Connect U2-10 to +5 volts;
Remove the connection at U3-3;
Remove the connection at U3-4;
Connect U3-3 and U3-4 to ground;
Remove the connection at U4-3;
Remove the connection at U4-10;
Remove the connection at U4-11;
Connect U4-3 to +5 volts;
Connect U4-10 to +5 volts;
Connect U4-11 to ground;
Remove the connections at U5 pins 3, 4, 10, and 11;
Connect U5 pins 3, 4, and 10 to +5 volts;
Connect U5-11 to ground;
Remove the connection at U12-10;
Connect U12-10 to U11-13;
Retune vco L1 to cover 18.3 to 19.7 MHz. If required, retune your receiver local oscillator/multiplier chain.

Cost

As of the January, 1978, issue of *73 Magazine*, the cost of all ICs, diodes, transistors, regulators, and VVCs was $25.01.

Options

Figs. 2 through 13 define the basic 220 to 225 MHz frequency synthesizer. The following schematics are options which may be used in place of Figs. 2 through 13, as desired.

1. High-side injection — Replace Fig. 2 with Fig. 14; replace Fig. 3 with Fig. 16; and replace Fig. 8 with Fig. 15.

2. Single-frequency select switching with simplex repeater mode switch (repeater offset — 1.6 MHz) — refer to

Fig. 10. Delete the following parts: S1, S2, S4, Q9, Q8, R57, R58, R59, R60, S7, and the diodes in series with the arms of S3 an; S5. Connect the arm of S3 to +5 volts. Connect the arm of S5 to +5 volts. S3, S5, and S6 are the frequency select switches.

The mode select switch is added as follows: Replace Fig. 9 with Fig. 18. Modify Fig. 18 by adding S8, the diodes, capacitors, and resistor of Fig. 20.

Note that with low-side injection, the frequency select switches set the transmitter frequency in the repeat mode. The receiver frequency will be offset 1.6 MHz.

Note that with high-side injection, the frequency select switches set the receiver frequency in the repeat mode. The transmitter frequency will be offset 1.6 MHz.

3. Parts reduction – The number of ICs can be reduced by two. U4 and U17 can be eliminated. Replace Fig. 3 with Fig. 17. Replace Fig. 9 with Fig. 18. Note that U5 and U16 are changed from SN74176 to SN74177.

If you use high-side injection, replace Fig. 16 with Fig. 19 and replace Fig. 9 with Fig. 18. Note that U3, U5, and U16 are now SN74177.

As you can see, a PC board is not required to make this synthesizer. This scheme can be modified for use on 2 meters or at 440 MHz.

If you have any specific questions related to this 220-225 MHz frequency synthesizer, send me the questions and a stamped self-addressed envelope. ■

References

1. *RCA COS/MOS Integrated Circuits*, SSD-203C, 1975 Data Book Series, pages 227 through 233.
2. "The RCA COS/MOS Phase Locked Loop . . .", *COS/MOS Micropower Phase Locked Loop*, pages 471 through 478.
3. *The TTL Data Book*, Texas Instruments, 1973, pages 62, 63, 64, 79, 82, 86, 94, 120, 134, 209, 369, and 451.

Social Events

RAPID CITY SD
JUL 1-2

The annual South Dakota hamfest will be held on July 1 and 2, 1978, at Surbeck Center on the campus of the South Dakota School of Mines and Technology, Rapid City, South Dakota. There will be technical forums, an ARRL forum, a flea market, and Industrial tours. The grand prize will be a Kenwood TS-520S; the preregistration prize will be a Kenwood TR-7500. Admission is $4.50 in advance (before June 1) or $5.00 at the door. Plan to include this on a vacation to the Black Hills for the July 4th weekend. We recommend early reservations for accommodations. For more information and/or assistance with reservations, write to Black Hills ARC, Box 1014, Rapid City SD 57709.

BRIDGETON MO
JUL 6-8

The ICHN/MARAC 10th annual convention will be held July 6, 7, and 8 at the Holiday Inn, 4545 N. Lindburg Blvd., Bridgeton MO. This convention will involve amateur radio operators from every part of the United States and several DX stations, all sharing a common interest in county hunting and mobile operation. The election of MARAC officers, meetings, workshops, and some important social activities will highlight this year's convention. Of course, there will be prizes and awards to add spice to the festivities. Those interested in attending this year's convention can send for information from Convention Director Jim Glascock WØFF, 3416 Manhattan Ave., St. Louis MO 63143.

WELLINGTON OH
JUL 8

The NOARSFEST will be held on Saturday, July 8, from 7:00 am to 6:00 pm, at the Lorain County Fairgrounds, Wellington OH. There will be a well-marked, paved flea market area. A DenTron DTR-1 transceiver will be given away as well as 100 other prizes. Tickets are $1.50 before July 1 and $2.00 at the gate. Talk-in on 146.10/70. Mobile check-in for prizes on 146.52. For further info, contact NOARSFEST, PO Box 354, Lorain OH 44052.

CUMMINGTON MA
JUL 8-9

The Northern Berkshire Amateur Radio Club's hamfest will be held on July 8th and 9th at the Cummington Fair Grounds, Cummington, Massachusetts. There will be free overnight camping, technical talks, demonstrations, and dealers. The flea market will cost $1. Admission will be $4 or, with spouse, $6. Advanced tickets are $3 and $5. For information write: Hildy Sheerin WA1ZNE, 89 Greylock Terrace, Pittsfield MA 01201.

CHARLESTON SC
JUL 8-9

The Charlestowne Hamfest will be held July 8-9 at Gaillard Municipal Auditorium, 77 Calhoun Street, beginning on Saturday, July 8, at 8:00 am. Events include FCC exams on Saturday at 8:00 am, planned ladies' activities, and a Social Room Saturday at 7:30 pm. Admission charge is $3.00. Tables are available for $3.00. Free refreshments. Talk-in on 34/94. For further information, write to PO Box 4555, Charleston SC 29405.

INT'L PEACE GARDENS
MANITOBA
JUL 8-9

The 15th annual International Hamfest at the Canadian Pavilion in the International Peace Gardens will be held on Saturday and Sunday, July 8-9, beginning at 2:00 pm. Transmitter hunts, contests, door prizes, and lots of other social activities. Admission is $5.00 for hams, $2.00 for non-hams, and children are free. Plenty of camping facilities. Talk-in on 34/94, 3990, and 3778 kHz. For further info, contact Lynn A. Nelson WAØWB6, 1301 2nd Ave. W., Devils Lake ND 58301 or Reginald G. Edworthy VE4RW, 449 7th St., Brandon, Man. R7A 3S9.

INDIANAPOLIS IN
JUL 9

The Indianapolis hamfest will be held on Sunday, July 9, 1978. The gates will be open from 6:00 am to 4:30 pm. The place is the Marion County Fairgrounds, S.E. corner, in Indianapolis, Indiana. There will be professional commercial exhibiting, a covered flea market, and an unlimited outside flea market. Overnight camping facilities with hookup are available. For information, write to Indianapolis Hamfest, PO Box 1002, Indianapolis IN 46206.

ESSEX MT
JUL 15-16

The International Glacier-Waterton Hamfest will be held on July 15-16, 1978, in the West Glacier Area, Montana. The location will be at the Three Forks Campground, 10 miles east of Essex MT on U.S. Highway 2. Registration begins at 9:00 am MST.

BOWLING GREEN OH
JUL 16

The Wood County, Ohio, 14th annual Ham-a-Rama will be held on Sunday, July 16, at the fairgrounds in Bowling Green (just off I-75). Gates open at 10:00 am. Admission and parking are free. Tables are available for $3.00 or 8-foot spaces for $2.00 (advance table or space rental to dealers only). Trunk-sale space and food will also be available. There will be a main prize drawing and lots of door prizes. K8TIH talk-in on 146.52 simplex. Tickets are $1.50 in advance, $2.00 at the door. Write to Wood County Amateur Radio Club, c/o Eric Willman, 14118 Bishop Road, Bowling Green, Ohio 43402.

ARLINGTON VA
JUL 22-23

The Amateur Computing 78 microcomputer festival will be held July 22-23 at the Sheraton National Motor Hotel, Columbia Pike and Washington Blvd., Arlington VA. The show will feature commercial exhibits, personal computer displays, seminars, and club activities. Computer hobbyists and the general public are welcome. Registration at the door for two full days is $5.00 (spouse and children of ticket holder admitted free). If not sold out, Saturday night banquet tickets are $14.00 per person if purchased at the show. Admission tickets are $4.00 and the banquet tickets are $12.00 per person, if ordered in advance by mail. Send check payable to AMRAD to PO Box 682, McLean VA 22101.

MARSHALL MO
JUL 23

The Indian Foothills Amateur Radio Club, Inc., will hold its third annual hamfest on July 23, 1978, in an air-conditioned multipurpose building at the Saline County Fairgrounds in Marshall, Missouri. There will be flea markets for the OM and XYL (tables—$2.00 for first table; $1.00 for each additional table). Many prizes are to be awarded and there will be old and new equipment displays. Campgrounds (no connections for utilities) are available. The timetable is 8:00 am—registration; 8:00 am to 10:00 am—breakfast rolls and coffee; 11:30 am—lunch—all you can

Continued on page 144

Beat the Microphone Blahs

—more oomph for FM audio

George K. Fallenbeck K1HQW/4
1008 Pine Lake Drive
Niceville FL 32578

Are you plagued by a microphone which generates insufficient output? Do you have to darn near swallow the thing to obtain decent modulation? Is your FM rig's deviation control wide open, and you're still getting reports of low audio? Read on, for the cure is at hand!

The Heath Micoder has an output of 30 mV, which is supposedly enough to drive the input speech clipper of the HW-2036 into limiting. This would tend to hold the audio level constant over a reasonable range. My HW-2036 was not being driven sufficiently. If I backed off from the mike the least bit, the modulation dropped drastically. The transceiver input seemed sensitive enough, since the touchtone™ level was perfect for the rather finicky local repeater's autopatch with the touchtone level pot in the Micoder set at only 50% of maximum. That left the fancy electret capacitor mike in the Micoder as the culprit. Its output was already boosted by an integral preamp, but it wasn't sufficient. A fair proportion of the HW-2036 owners in the area have the same problem. What quick, dirty fix would boost the gain?

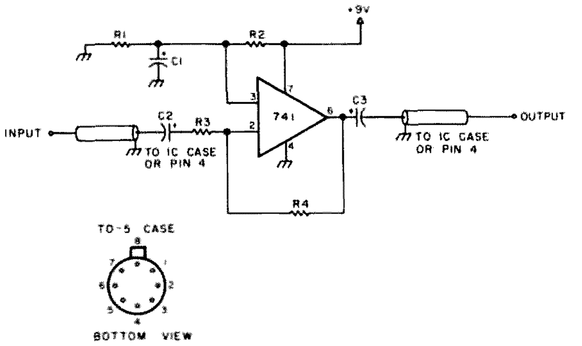

Fig. 1. IC — LM741CH, TO-5 metal case style, available from James Electronics (if different case configuration is used, pinout may be different); C1 — 5 uF or larger tantalum; C2, C3 — .1 uF tantalum; R1, R2 — 4.7k, ¼ W; R3 — 47k, ¼ W; R4 — 330k, ¼ W.

A quick scan through IC literature resulted in the following preamp. They don't get much simpler. The original version used miniature pots for symmetry and gain adjusts and wouldn't fit into the Micoder case. It also generated hum. The second version dispensed with the pots in lieu of fixed resistors, eliminated the hum, and is set for adequate gain for the 2036 application.

Tantalum capacitors and quarter-Watt resistors are recommended, since they form a very compact unit. All wiring is lead to lead (dead bug). Circuit ground is the case of the 741 IC metal case. In this case, you will probably find that the case is internally grounded to V-, so you won't have to make the connection externally. If you use a DIP-style IC, use whatever pin is V- as circuit ground. Use thin shielded lead, such as the type used in phonograph tone arms, for the input and output leads. It is very flexible and easy to work with. You'll pick up hum if you don't use the shielded lead. Strive for the smallest resultant package. After you have tested the unit, either in the mike or using some convenient audio amp, pot the entire module in

a blob of 5-minute quick-setting epoxy. The unit will be insulated and physically protected, and you will prevent shorts between components or to the Micoder terminals.

Installation in the Micoder is simple. Disassemble the Micoder case, and set the touchtone generating board aside. Remove the 9 V battery because you will zap the push-to-talk input transistor in the HW-2036 if you accidentally get 9 V on the push-to-talk line. All you need do is short the two middle lugs on the PTT switch. I did. Disconnect the 2.2k, ¼-Watt resistor from pin 2 of the mike element. Connect the preamp input lead center conductor to pin 2 and the shield to pin 3. Connect the 9 V supply lead to SW-101, lug 4. Connect the ground lead to terminal strip D, lug 1. Connect the output lead center conductor to the end of the 2.2k resistor previously disconnected from lug 2 of the mike. Let the shield float. Cram the preamp against and under terminal strip D, and glue it down. Reinstall the battery, and reassemble the Micoder case.

The preamp is set for a voltage gain of about 8 (gain = [R4 + R3]/R3).

The gain can be adjusted (before potting) by varying R4. Decrease R4 to decrease gain and vice versa. With R4 set at 1 meg, you'll realize a gain of about 22, or an output of about 660 mV for 30 mV in.

While thrown together for the Micoder, this preamp should be applicable to any other low-level mike. Just supply a source of 9 V or less. High-level mikes, such as crystal or certain ceramic types, will overdrive this preamp. Also, there is no reason why you can't mount it inside the rig to more conveniently access a source of voltage.

You probably never drove your FM transceiver into the proper speech clipping mode if your mike output was previously inadequate. You now will and with the mike at quite reasonable distances from your mouth. Be prepared to reduce the deviation limiting control on the rig or face the wrath of the local rabble. ■

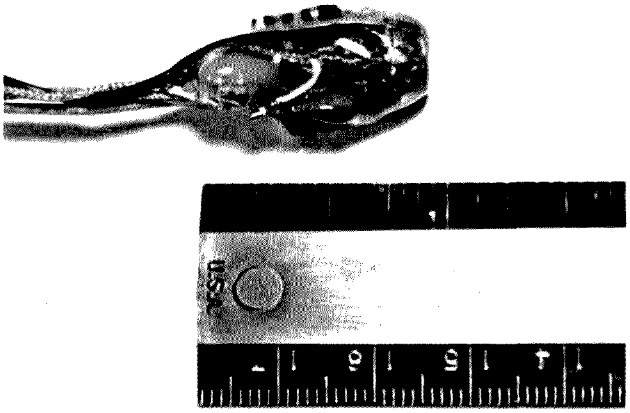

Example of construction. This unit was constructed using ½-Watt resistors and is larger than necessary.

Robert Nobel
Box 23
Birmingham NJ 08011

Forbidden Contacts

—19 countries off limits to 4X4 amateurs

I found the house of Ricky Kline 4X4NJ as one might expect. I told some of his neighbors in Gan Yavne, a removed little town to the south of Tel Aviv, that I was looking for the amateur radio operator. When that did not bring directions, I added that I was sure that he had a giant antenna on his house. "Oh, that one," responded my informants, and within minutes I was at Ricky's gate.

He showed me into his large attractive split-level house while the I dog I had read about at the front gate made his presence known from somewhere in the backyard. We sat briefly in the sunken living room and then climbed past two more immaculate floors and finally reached his shack. Towering bookcases with the stacked books forming random geometric patterns, jumbled equipment, and three large cardboard boxes stashed in a corner with QSL cards slipping out formed a hurricane-like periphery to his orderly and sophisticated station in the center.

I, formerly WA2JPN and looking in on the Israeli amateur scene, asked to see what was happening on the 4X4 net, the 20 meter meeting place for those wanting to make contact with Israeli stations. There were no local contacts in progress. Afterwards, I recalled being told that activity stops almost completely from 8:00, when Arab language broadcasting on the television ends, until 9:30, the end of the news.

While fruitlessly looking for local hams on the band, Ricky, eight years in the country and K7NJ during his visits home, came across an Algerian station. "Watch this. He won't answer." Sure enough, the 7X2 station was suddenly silent after Ricky's call. "That's typical," he said. "He probably has some clerk in his country who forbids him to." Ricky next tried a CN8 station, who tacked on to his call with precise diction that he was "broadcasting from the Kingdom of Morocco," and met with the same reception.

The next time that Ricky renews his license, some clerk will make it illegal for him, also, to try to bridge the gap between himself and his North African counterparts. The Ministry of Communications recently announced that it was "updating" the current ban on contacts with seven Arab countries to "match the present reality," and that, henceforth, nineteen North African and Middle Eastern states would be off bounds for amateurs. The decision followed the raising of the ban issue some months earlier in *The Wave*, the bimonthly magazine of the Israel Amateur Radio Club, by Rami 4X4LX. After reviewing the question of the ban in general terms, he closed his letter by suggesting that "the club act to have the Ministry of Communications erase this restriction from the terms of the license, quietly and without a lot of fanfare. This does not mean that immediately upon removal of the limitation we have to court the Arab hams, for they certainly will not respond. Removal of the restriction will prove that

"We must act to topple the artificial walls in the ether waves," wrote Ricky Kline 4X4NJ, in the IARC's magazine, The Wave, *as he called for a cancellation of the ban on contact with Arab countries.*

we are not hatemongers."

The following month, the normally bland letters column of *The Wave*, which is published in Hebrew, came alive with a universally favorable response to Rami's suggestion. Erez 4Z4QE stated that "contact between us and Arab amateurs can only be a positive factor on the road to peace." His sentiment was echoed in stronger language by Ricky 4X4NJ, who wrote, "We must act to topple the artificial walls in the ether waves. Amateur radio is based upon friendship, help, and cooperation — principles which are in accordance with the 'open bridges' policy of the government of Israel ... There is no justifiable reason for the existence of the ban today."

Ricky went on to fantasize a conversation between "Hussein" and "Yitzhak" which closed, "'4X1 this is JY1. Yitzhak, you have a nice signal. My name is Hussein. I've been waiting to talk to you for a long time. This is indeed a pleasure — over.'

"'JY1, this is 4X1. Hussein, it is a pleasure for me, too. It's wonderful meeting you this way ...'"

The decision was announced several months later in a letter from the Ministry of Communications printed in *The Wave*. It drew disappointed notice from Doron Arad 4Z4BR, editor of the organ. "The new ban on Arab states, as published in this issue, will certainly set up a far-reaching repercussion amongst us, and we hope that this sad order will be canceled. Just a short time ago, many members spoke of canceling the ban on the seven original Arab countries, and now they have 'generously' added more."

The Ministry of Communications, explained M. Shaked from the section which was responsible for the handling of amateur affairs, was only acting in accordance with instructions that it received from the Ministry of Security. While unwilling to state his personal opinion, Shaked implied that he was in favor of the amateurs' position.

Although the notion of the ban being justified for security reasons was termed "ludicrous" by the amateurs, the decision to broaden the ban was apparently made at a high level in the Ministry of Security — "probably by misinformed people who mean well," noted Ricky. He said that there were presently efforts being made through "quiet diplomacy" to have the decision rescinded. "We don't want to force anyone to make a case they can't back out of."

In spite of the ban, contacts with Arab countries take place. They usually occur during contests and are of short duration. One of Israel's most competent hams, who proudly displayed an aging QSL from Jordan on his wall, worriedly requested to remain anonymous. The ban is taken quite seriously by the amateurs, and there was a great hesitancy to confirm the existence of such contacts. The Ministry of

Secretary of the IARC, David Ben-Basat 4X4WH, places a call on a telephone, with a memory dialing circuit and loudspeaker produced by his electronics firm. He felt that "there is not another country that compares with us in the friendship among Israel's fraternity."

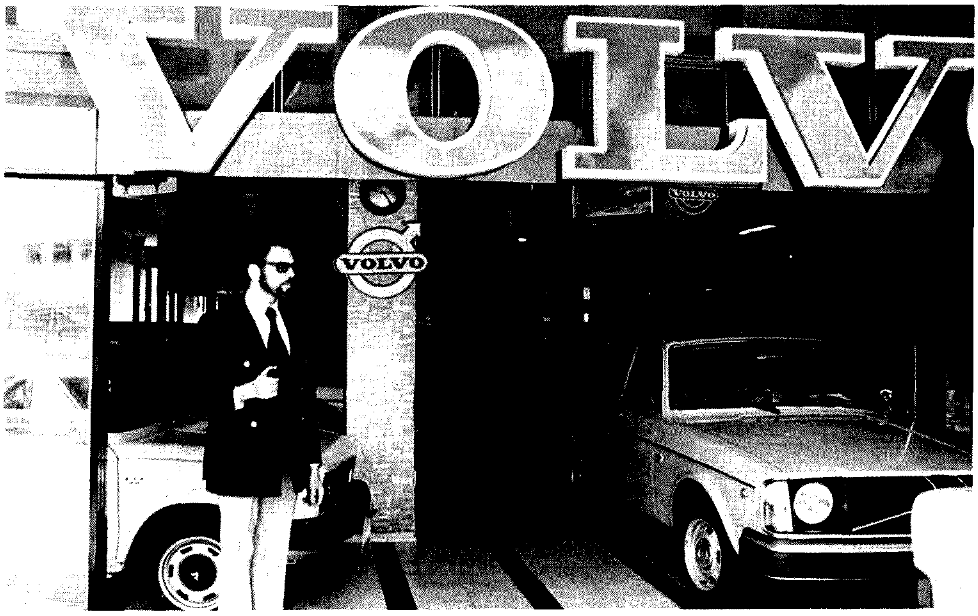

Israel Kass 4Z4IK stands outside the Tel Aviv showrooms of his Volvo distributorship. Israel is the president of the IARC and has his staff take care of much of the club's bulk work, such as the mailing of its magazine and handling shipments of donated surplus equipment.

Communications is ready to enforce the ban with a violation report, three of which lead to license revocation.

Russian amateurs are forbidden by their government to talk with Israeli amateurs, a situation which the secretary of the IARC, David Ben-Basat 4X4WH, indignantly termed "a real scandal, for we are not in a state of war with them." There are, however, Russian amateurs who are willing to risk reprisals from the authorities and make contact with Israelis. Ricky 4X4NJ showed me a letter he received from a young Russian amateur with whom he had talked. "Band conditions here are very bad," read part of the letter, "especially on 40 and 20 meters because of jamming broadcast stations a mile away from us." Many such venturesome amateurs are Jews who have been sent to Siberia. One such amateur used to contact Israel every day for months on 20 meters. Suddenly, he disappeared from the air, and it was assumed that the authorities had finally caught up with him. Several months later, he surfaced in Israel as a new immigrant, and, soon after, he received his 4X4 callsign.

Generally, there is mutual cooperation and respect between Israeli amateurs and the Ministry of Communications. Israelis have a high degree of sensitivity to the concept of things being "good for the country" and amateur radio is so considered. Both from the IARC and the Ministry of Communications, I heard the identically expressed sentiment that the measuring rod for the level of technological development of a country is its relative number of amateur radio operators.

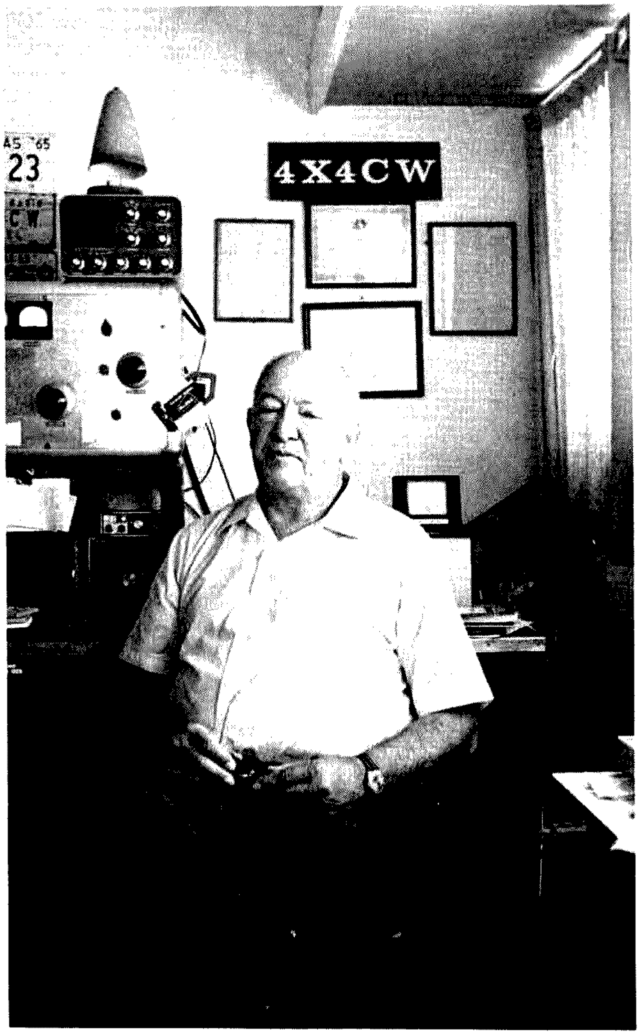

Ozzie Osrin 4X4CW received his call in 1948 and is the holder of the first amateur radio license issued by Israel. He recently founded an old-timers' club and hopes to enlist eligible members in the Quarter Century Wireless Association.

Licensing examinations are given twice a year. The Ministry allows an observer from the IARC to sit in on the tests for each of the three license levels. The observers check the questions on the exams, and, if something appears unclear, they ask the examiner to explain the question more completely. On occasion, a question is removed from the examination if it is pointed out as unsuitable.

The lowest level of license, class C, is presently held by eighty amateurs. Operation is severely restricted, with an output of ten Watts allowed and transmission confined to CW on portions of the 15 and 40 meter bands. However, the license is renewable. The class B license is held by 300 amateurs and permits 200-Watt output transmission on slightly more frequencies than the American General class license. The highest class license, class A, is obtained after a code test and a demanding verbal theory test that causes a high rate of failure each time the test is given. One hundred and eighty Israeli amateurs hold class A licenses.

The Ministry of Communications is strikingly cooperative with tourists and new immigrants. Tourists from one of the six countries with whom Israel has a reciprocal licensing agreement, including the United States, who arrive at the Ministry's office with all the required information, are granted a temporary license on the spot. Tourists who arrive from most other friendly countries receive the same treatment. New immigrants may have a wait of several weeks before receiving their permanent new call. I remarked to David 4X4WH that, in the United States, the process is more complex. "You're telling me!" he exploded and pulled out a carefully worded request that he had sent to the FCC far in advance of his intended trip to the States, and, several days before setting out, he was still unsure if he would receive a positive response.

The Ministry of Communications provides another "extra" to the amateurs by channeling surplus equipment to them through the IARC. The army and police are large sources for such equipment, as in Motorola of Israel. The equipment is distributed by the IARC to its members through raffles. Much of such equipment is dated two meter equipment.

The first shipment of surplus equipment was received in late 1972 and consisted of one-Watt walkie-talkie police radios. Their distribution served to open up the two meter band in Israel, a movement that has continued until today when virtually all eligible hams have two meter capability, and the band has assumed the character of the local corner meeting place. It provided an easy way for making domestic contacts, a capability that served to unite the amateur fraternity in the country. The operating practice of many of the hams on the band, however, draws comparisons to the notoriously bad traffic on the highways.

Two meters has also become the focal point of local development work. There are several groups that meet regularly and work on modification plans or the design for some new component, and there is hardly an issue of *The Wave* that does not appear with some of the fruits of their labor.

The IARC has actively participated in the development of the band by erecting and maintaining five

repeaters scattered throughout the country, from Beer Sheva in the south to Safed in the north. The coastal repeaters at Haifa and Tel Aviv have opened them up to two meter DX. With favorable conditions, Cyprus can be contacted.

Most of Israel's active hams, and some who are not, are members of the IARC, according to the club's president Israel Kass 4Z41K. Their ranks are swelled by 100 SWLs, often youngsters who are in the process of studying for their licenses. The club members meet each other in person at the annual meeting, which is attended by virtually all of the members. The close-knit fraternity, most of whom know each other, also gathers for field days sponsored by the club.

Israel Kass enlists the services of his Volvo distributorship to aid in the distribution of the club's bimonthly magazine, *The Wave*. When the magazines arrive from the printers, he sets the entire staff to work stuffing them into envelopes and attaching computer-printed postal stickers, an operation that lasts several hours. He will also soon add Kenwood amateur equipment to his posh Tel Aviv showrooms, establishing one of the very few organized distributorships of amateur equipment in Israel.

Amateurs generally have to rely on friends coming from abroad or business trips which have taken them out of the country in order to obtain equipment. A thirty-percent tax is levied on amateur gear being brought into the country, which, steep as it may sound, is in sharp contrast to the usual two-hundred-percent tax on electronic equipment.

Friends are also used to circumvent the difficulties in obtaining equipment. There is a tremendous willingness among the Israeli amateurs to help one another, and a great amount of equipment is lent or just given as an outright gift. "When I go out and take something from somebody, I do it because I feel better, not because I can't buy it," explained David 4X4WH. "A friend will hear that I want to buy a certain piece of equipment and he'll say, 'Why waste good money? Come over to my place and I'll give it to you.' " He pointed out his teleprinter as a gift he received, while he himself had lent out thousands of dollars of equipment before leaving on an extended trip abroad.

There are two primary sources of Israeli amateur radio operators. Many are high school students studying in technical programs. They join one of the many clubs (one hundred clubs have valid licenses, although not all are active), and, by the time they are in the tenth grade, they have the theoretical knowledge to pass the licensing test. Even the most critical observer of the Israeli ham scene had words of praise for the level of technical knowledge among such youths. Many other amateurs join the ranks after serving in the army's communication corps. The

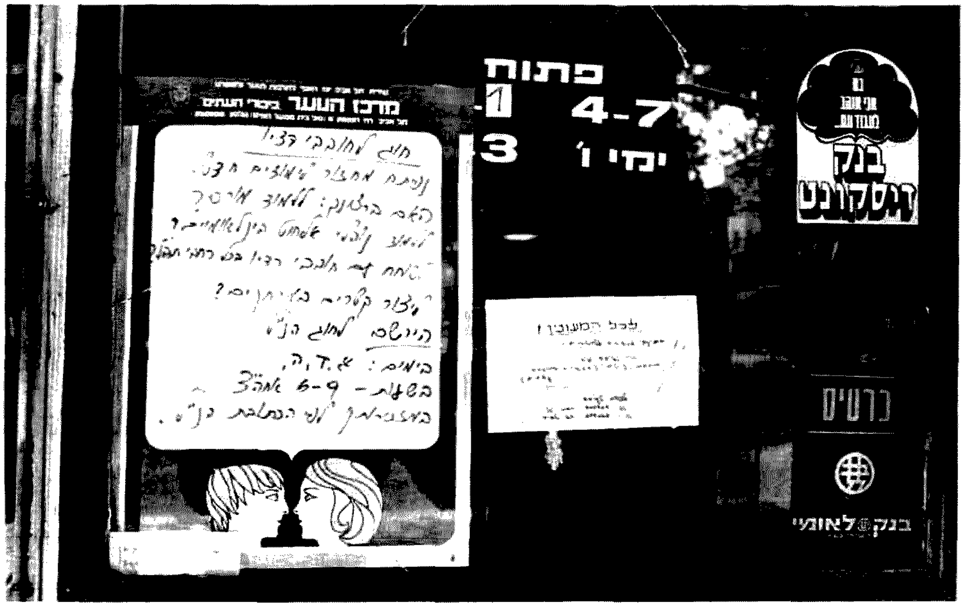

"Do you want to learn Morse? To learn international wireless procedures?" asks the Youth Center poster. The announcement was posted by brother and sister, Oded 4Z4RL and Irit 4Z4UE in the family's shoe store in North Tel Aviv.


Numero Uno — the lively meeting place of Israeli and foreign hams just off the bustling Dizengoff Circle in Tel Aviv. In the background, visiting Maurice Kiek PAØCI and Jack Izhaki 4X4AH are seated at Jack's habitual table.

army fosters the hobby and sponsors several clubs that have stations and offer instruction for passing the licensing tests.

Israeli amateurs may be contacted via the 4X4 net. The net, located at 14.320 MHz, grew out of the consistent contact between Hal Crystal K2BYB and 4X4 amateurs. Hal also formed a group of Jewish amateurs called Chaverim ("friends," in Hebrew), which has as its aim, according to its monthly newsletter, "to promote a closer association between Jewish amateur radio operators the world over." While most members of the group must pay a five-dollar subscription fee in order to receive the newsletter, all members of the IARC receive it free of charge. The newsletter is mailed bulk to Israel 4X4IK, who simply has his staff include it in his mailings of *The Wave*.

Amateurs coming to Israel for a visit also have a fixed place where they can meet up with Israeli amateurs. In the center of Tel Aviv, just off Dizengoff Circle, Jack Izhaki 4X4AH has set up an unofficial reception center in a sidewalk cafe called Numero Uno. Taking regularly scheduled breaks from his nearby electronics store, he stations himself at what he calls "my reserved table," just off the sidewalk, and, almost daily, is joined by amateurs visiting from abroad.

The cafe is usually only the starting point of the tour, as Jack often invites his guests home or puts them in touch with other amateurs in the area. Aided by the liberal rules concerning tourist operation and the hospitality of the hosts, the visits are usually quite successful, as warmly confirmed by Maurice Kiek PA0CI as he chatted with Jack at the cafe. "Words can't describe my reception here," he said. "I feel like the prince of the royal family." ■

Joe Magee K5OM
Box 5444
Austin TX 78763

A Darn Good IDer

—repeaters get smarter every day

Did you ever feel that if someone else could do something, then you could, too, and, if not better, then at least in your own way? Ever since putting together a diode matrix CW identifier, I felt there must be a better (or at least different) way of doing things. The area that needed the most attention was programming the call and later changing the program or perhaps just correcting an error made in the "R" of WR5 . . .

So, I sat down with a box of CMOS and decided to do something. The final result is depicted in Fig. 1. I thought of using a shift register first, but the junk box did not have any. All I could find were some memory chips I had been hoarding for a computer project. I tried several memory chips, and an MM2102 1024-bit RAM (Random Access Memory) worked best.

The resulting design is a programmable CW identifier which can hold a varying length message of up to more than 1000 bits. The circuit has the following features: 1) low power, 2) low parts count, 3) variable length message, 4) end-of-message detector, 5) easy programming, 6) easy modification for holding several messages, and 7) can be used as memory in a programmable CW keyer.

The identifier requires a negative-going pulse to start and provides a voltage level out when operating. When the end of message is detected, the IDer stops and resets.

How Does It Work?

The heart of the system is the clock oscillator. In order to use CMOS wherever possible, I decided to forego the urge to build a simple 555-type clock and instead used a simpler Schmitt trigger inverter. Due to the fact that a Schmitt trigger has a certain voltage at which it detects a logic high and another at which it detects a logic low, an oscillator can easily be made out of one. Referring to Fig. 2, you can see that as the output switches, the input drifts between these two voltage levels. The rate of drift, or frequency of oscillation, is then determined by the values of the resistor and capacitor. A pot is included to allow changing the clock speed. This oscillator is fed into a series of gates used to select either the free-running

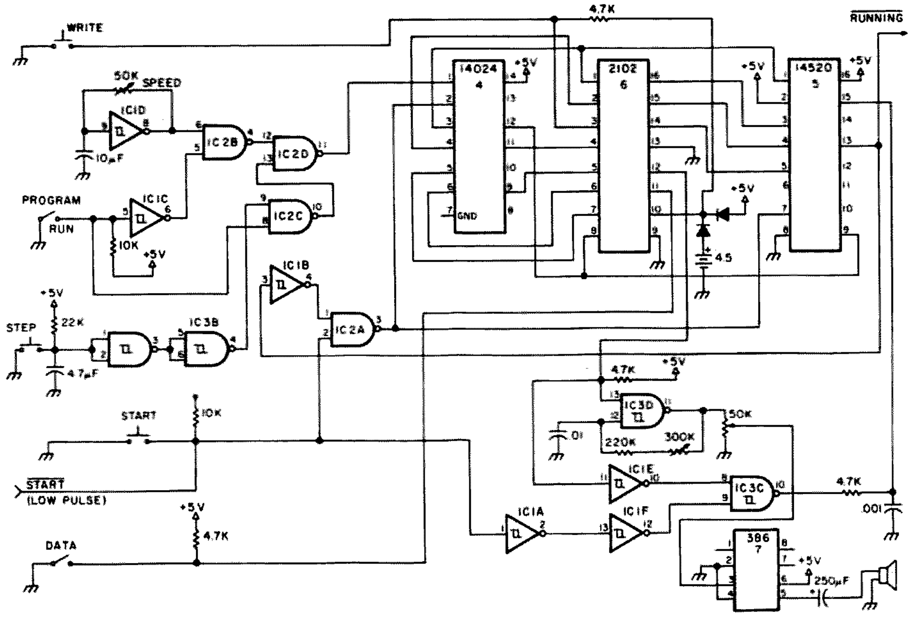

Fig. 1. IC1: MC14584; IC2: MC14011; IC3: MC14093; IC4: MC14024; IC5: MC14520; IC6: MM2102; IC7: LM386.

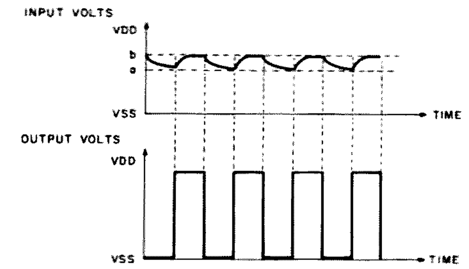

Fig. 2. Diagram of input and output waveforms on Schmitt trigger oscillator. Voltage a is the point where the inverter output goes high, while b is where the output goes low. This is a characteristic of all Schmitt triggers and is called hysteresis.

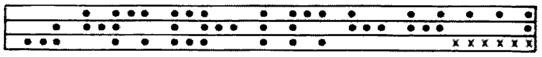

Fig. 3. This is a sample chart showing how WR5ALM AUS looks on a preloading graph. The Xs at the end are "don't cares," that is, it doesn't matter what is there.

clock or a pulse from a one-shot triggered by a button on the front panel.

The one-shot is also made from a Schmitt trigger. In this case, the input normally sits high. The button discharges the capacitor and causes the output to go high. As the capacitor slowly recharges through the resistor, the output will eventually switch back to low. Thus a single pulse is generated, and its length is determined by the values of R and C. Also note that as long as the button is held down, the output stays high, so the length of the pulse is the length of time the button is down plus the time provided by R and C. Another reason to use a Schmitt trigger in this application is that the input does not have an active or linear region. In most ordinary CMOS gates, as the inputs slowly drift from high to low, or vice versa, a point will be reached when the output will try to be high and low at the same time. Nearly all current drawn by CMOS logic occurs during this output transition, so it is best to make the inputs go from high to low or low to high as fast as possible (unless you are using a Schmitt trigger).

The pulse from the one-shot is used during programming to step through the memory. The low order (least significant) address bits are generated by an MC14024B (IC4) 7-stage binary counter. This provides the first seven address lines to the 2102 memory. The remaining three come from one half of an MC14520B (IC5) dual binary counter. The other half of the counter is used to generate the stop/reset signal. I considered some type of bit pattern as a stop signal, but that is much too complex to decode. I also thought of a retriggerable one-shot which would time out after the last "1" had been clocked out of the memory. Such an approach would be easy to implement, since a one-shot could be available on another Schmitt trigger IC, but, as code speed is increased, the number of "0" bits needed to fill the time until the one-shot times out increases. Certain indecision then arises at programming time and complicates the task. So, the MC14520 divider was chosen.

The divider is set to count clock pulses. Any time 8 clocks go by without a "1" coming from the memory, a stop/reset signal is generated. That way, no matter at what speed the IDer is running, after 8 "0"s are detected, everything stops. "Why?" you ask. The counter is hooked up so that each time a "1" is sent from the memory, the counter is reset. The stop/reset signal is simply the Q2 output of the MC14520, which stays low until the eighth count. Then it goes high and resets IC4 and the other half of IC5. This also stops the reset counter, so the line stays high until reset by the next start pulse. The free-running clock is still on IC4, but the divider will not respond as long as its reset line is being held high.

The reset signal doesn't go directly to the address counters, but is sent through a series of NAND gates, which allows the start pulse to reset the end-of-message counter, as well. This allows the operator to reset the memory to location 0 (the beginning) during programming.

The memory itself (IC6), as mentioned earlier, is an MM2102 MOS static RAM. The data-out line is tied to one input of a NAND gate Schmitt trigger oscillator (IC3D). Thus a zero (or low) level from the memory keeps the oscillator from operating. A "1" (or high) from the memory starts the tone, and it will continue as long as this voltage is present. This line is also sent through an OR gate, made up of two inverters and a NAND gate, to the reset line of the stop/reset counter, as explained before.

Programming the memory is done by first selecting "program" on the program/run switch. This action disables the free-running oscillator and enables the one-shot. Then the "start" button is pressed to ensure that we are at the first location of the memory. The "step" button is pushed a few times to make sure the message does not start instantly. By starting a message in the first location, the first character will reset the end-of-message counter just as if it were a start pulse, and the IDer will go into a loop, resending the same message.

The step button should be pushed staccato fashion, as the one-shot is not a perfect debouncer, and its time constant is very short. (A debouncer is necessary on this switch, as the CMOS logic is fast enough to respond to the noise generated by this, as well as any mechanical switch.) If the button is pushed slowly, extra clock pulses may be generated, causing you to lose your place in the loading sequence.

By first laying out the message on graph paper (Fig. 3), proceeding with loading is simple. As each memory location (corresponding to each successive square on the graph) is accessed, the proper data must be entered. In some cases, the proper data will be present and you can step on. But, if a one is where a zero should be, or a zero is where a one should be, we must use the "write" button. The write button will deposit whatever data is selected by the "data" button. The data button will normally produce ones, but, by depressing it and then working the write button, a zero will be deposited in memory. When done, be sure there are at least 8 zeros at the end, in order to make the reset logic work.

Options

1024 bits is far more space than nearly all repeater IDers will ever need. By adding two switches and two resistors, you can create 4 pages of memory. Each page will be 256 bits long. 256 bits is still more than most repeaters will need, but it does allow some flexibility, and four IDs can be programmed. The way to do this is to disconnect pin 4 on IC5 from pin 15 on IC6 and pin 5 on IC5 from pin 14 on IC6. Next, put a 4.7k pull-up resistor on pin 14 of IC6 and another on pin 15 of IC6. Now run each line to a separate SPST switch. These switches have 4 combinations of positions: both down, both up, one down and the other up, and the first up and the second down. Each com-

bination corresponds to one of the four pages, and each page may be loaded and used separately.

An optional extra included in this circuit is an audio monitor. For simplicity, I went over to the nearby Radio Shack store and purchased an LM386N 1-Watt audio amp IC. It works very well, but it does load the audio oscillator slightly, and changing the volume level will affect the pitch a little.

Another option is a standby battery for the memory. The solid state memory will forget all it knows if power is removed. The two diodes are included to allow the battery to power only the memory and not the rest of the circuit. The pull-up resistor for the write line is also tied in here to keep a false write pulse from occurring during system power up.

The prototype circuit I built draws about 20 mA in standby. The drain on the memory battery during power off is about 11 mA. (I used a 2102, not a low power 21L02. I don't know what the current requirement will be for a 21L02 in this application.) Without the audio chip, standby current is about 17 mA.

Several of these IDers are in use here in Texas — one locally. A few bugs were found before writing this article. A few problems persisted, but, by trying several different 2102s in the circuit, they went away. We feel that all the problems were related to the bargain 2102s we used. A double-sided, plated-through circuit board will be made available if sufficient interest is generated.

While this article purports this to be an identifier, it could very easily be made into the memory portion of an electronic keyer. But knowing that my way may not be your way, I leave it up to you to take this circuit and use it the best way. ■

Social Events

from page 133

eat; 2:30 pm—drawing. Tickets are $2.00 in advance, $2.50 at the door. For information and tickets, write James H. Little WD0BPG, 405 East Rosehill, Marshall, Missouri 65340. Talk-in on 52, 28/88.

MCKEESPORT PA
JUL 23

The Two Rivers Amateur Radio Club of McKeesport PA will hold its 14th annual hamfest on Sunday, July 23, at the Green Valley Volunteer Fire Company grounds in North Versailles, just off Route 30. Talk-in on 22/82. Free parking. Registration required for setup in swap and shop. Home-style food and refreshments. For more info, write to Andrew Salitros W3OFM, 2901 Stewart St., McKeesport PA 15132.

GOLDEN CO
JUL 23

The RMRL picnic will be held at the QTH of WA0HJZ (Rt. 6) on July 23, starting at noon. Please bring food, swapping goodies, and the kids. Talk-in on 34/94. For further info, contact Charles Kaufman WA0GUN, 3734 South Poplar St., Denver CO 80237.

SALEM OH
JUL 23

The Kent State Salem Amateur Radio Club will hold a hamfest on July 23, 1978. The door prize will be a Ten-Tec #540 transceiver, courtesy of KenMar Industries; there will be many others for the whole family as well as a hot air balloon, a ramp for wheel chairs, and plenty of free parking. Wives and kids under 12 free. XYL drawing and recreation facilities available on beautiful campus. Open at 9 am; main drawing at 3 pm. Admission: $2.00; flea market: $1.00; tables: $5.00. Talk-in on 146.10-.70. For information, write W8JPG 147.27, Milhoan Electronics, 1128 West State Street, Salem OH 44460; (216)-337-9275.

INDIANAPOLIS IN
JUL 26

The IEEE Computer Society of Central Indiana and the Central Indiana section of IEEE will sponsor the third annual Indy Microcomputer Show on Wednesday, July 26, 1978, from 11:00 am to 9:00 pm at the Holiday Inn located at I-70 and Shadeland Avenue in Indianapolis. There will be exhibits, demonstrations, and technical seminars addressing the engineering, industrial, scientific, business, and personal applications of microcomputer systems.

OKLAHOMA CITY OK
JUL 28-30

Central Oklahoma Radio Amateurs will present Ham Holiday '78 on July 28, 29, and 30, in the Lincoln Plaza Forum, 4345 North Lincoln Boulevard, Oklahoma City. Preregistration closes July 14 with a fee of $3.00; $4.00 at the door. Noncommercial flea market tables are free in the ten-thousand-square-foot flea market area. Commercial exhibitors contact K5MB at (405)-787-9545 or 787-9292. Technical programs are scheduled throughout the hamfest. Many prizes will be given away, including a special preregistration prize. Mail preregistrations to Ham Holiday '78, PO Box 14604, Oklahoma City OK 73113.

FT TUTHILL AZ
JUL 28-30

The Amateur Radio Council of Arizona will present the annual Ft. Tuthill Hamfest on July 28, 29, and 30, 1978. Come on out in the cool pine country of Arizona, and join our western barbeque, prize drawings, and tech sessions. For further details or preregistration forms, contact PO Box 11642, Phoenix AZ 85061.

KINGSFORD MI
JUL 29-30

The 30th annual U.P. hamfest, cosponsored by the Great Northern Repeater Association and the Mich-A-Con ARC of Iron Mountain-Kingsford, Michigan, will be held on Saturday, July 29, and Sunday, July 30, 1978, at the Dickinson County Armory on M-95 in Kingsford, Michigan. Registration will begin at 9:00 am on both days. Tickets are $2.50 in advance and $3.00 at the door. Saturday night banquet tickets are $6.50, and reservations should be received by July 1. Daily activities include: U.P. net meeting, U.P.R.A. meeting, YL net meeting, ARRL directors' meeting, computers, DX and contests, slow scan, satellite, RTTY, moonbounce, FAX, 2m SSB, a swap and shop, and a special discussion on "Antennas—Legal Aspects" by George Goldstone W8AP, vice-director of the Great Lakes Division. Planned family activities will be held both days. Plenty of parking is available. Prizes galore! Talk-in on 146.25/.85 and 3922. For information, write UPHAMFEST 78, Box 2056, Kingsford, Michigan 49801.

BALTIMORE MD
JUL 30

The Baltimore Radio Amateur Television Society will hold its annual Maryland hamfest on Sunday, July 30, 1978, from 8 am to 4 pm at the Howard County Fairgrounds off Interstate 70, 12 miles west of I-695 (exit 16). Talk-in on 146.52 MHz, and on 63/03, 16/76, and 52.76/52.525. Admission is $2 in advance and $4 at the door. Tailgating space is $2. There will be door prizes, and refreshments will be available. ATV and computers will be demonstrated. Checks should be made payable to the club. For table reservations or further information, contact Mayer Zimmerman W3GXK, c/o BRATS, PO Box 5915, Baltimore, Maryland 21208.

HOUSTON TX
AUG 4-6

On August 4, 5, and 6, 1978, the Houston Echo Society will host the annual Texas VHF-FM Society Summer Convention in the Galleria Plaza Hotel, just off interstate loop 610 at Westheimer Rd. While primarily devoted to the VHF-FM spectrum, attractions will also include microprocessors/microcomputers, the annual Texas champion hidden transmitter hunt, OSCAR communications, and much more, covering all phases of amateur radio. There will be forums conducted by both the ARRL and the FCC. A banquet/dance is planned for Saturday night. The featured speaker will be William A. Tynan W3XO, editor of "The World Above 50 MHz" column in *QST*. Exhibitors will be displaying their wares all day Saturday and Sunday. Several excellent prizes will also be given away. The main prize will be the choice of an HF rig or an allmode VHF rig, with the second prize being the rig which is not given away as the main prize. There will also be a preregistration prize as well as hourly door prizes. More information can be obtained by writing to: FM Society Summer Convention, PO Box 717, Tomball, Texas 77375.

MACKS INN ID
AUG 4-6

The 46th Annual WIMU (Wyoming, Idaho, Montana,

Continued on page 214

Karl T. Thurber, Jr. W8FX/4
233 Newcastle Lane
Montgomery AL 36117

Pick A Frequency . . . Any Frequency

—ultra-flexible crystal calibrator

While making the rounds at the Dayton Hamvention, pockets lined with moderate amounts of ready cash for those once-in-a-lifetime good deals, I came upon a very unique crystal calibrator manufactured and sold by Rainbow Industries (P.O. Box 2366, Indianapolis IN 46206), which was on display and available for immediate sale. Being presold on the unit, having previously read an advertisement extolling its virtues, I grabbed one for the W8FX/4 shack.

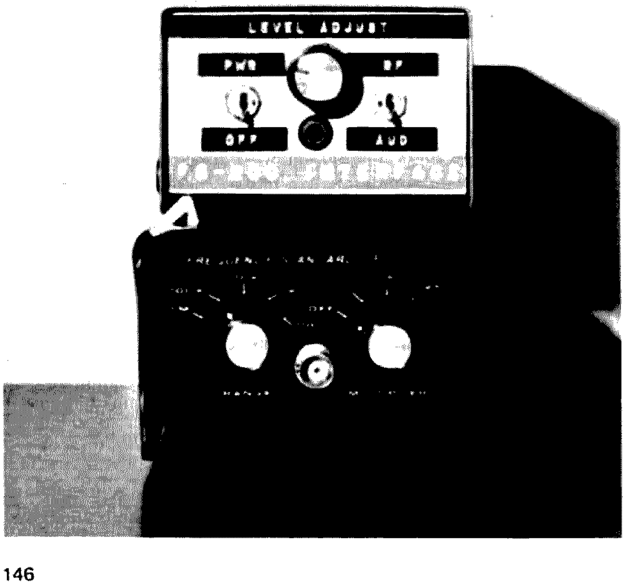

What makes the Rainbow FS-200 calibrator so different from the usual circuit providing calibration markers down to every 1000, 100, and sometimes 25 or 10 kHz is that it does all this and goes much further. It provides strong switch-selected, square wave markers every 1 MHz, 500, 250, 100, 50, 25, 10, 5, 2.5, and 1 kHz, as well as every 500, 250, 100, 50, and 25 Hertz! Thus, it can be used for a number of additional applications, such as an oscilloscope timebase calibrator, audio generator, frequency counter timebase, accurate signal source for analog and digital projects, hi-fi response testing, and, yes, even code practice. It features CMOS (complementary metal oxide semiconductor) integrated circuitry, constructed on a 3¼" x 2½" board, and has a trimmer capacitor for precise frequency adjustment. It will operate on any power source from 6.5 V dc to 15 V dc at about 15 mA. A front-panel BNC connector is provided for connecting to the output stage directly or for using a short piece of wire as an "antenna." Desired output frequency is switch-selectable from the front-panel "range" and "multiplier" switches.

The calibrator is available either fully wired and tested (Model FS-200C, for $34.95) in a minibox enclosure or as a prewired printed circuit board (Model FS-200B, for $19.95) less controls, switch, connectors, and cabinet. I bought one of the fully-assembled units and, upon hooking it up to a 9-volt battery, was pleasantly surprised to discover that it worked just as advertised, providing strong markers at practically any desired internal frequency well into the VHF region (over 100 MHz for my unit). The unit was easily calibrated against WWV by adjustment of a trimmer capacitor on the PC board. You could also calibrate and cross-check against a frequency counter of known accuracy. If you calibrate by zero-beating against WWV,

it's best to use the highest frequency receivable so that you would be using a high-order harmonic of the basic oscillator in the calibrator, for highest accuracy. One point to remember is that, as you approach zero-beat, the audio "beat note" becomes lower and lower, so it may be difficult to detect true zero-beat. Try using the receiver's S-meter; it will usually try to "track" the swing through zero-beat and can generally be relied on to get down to within a few cycles accuracy.

The fact that the FS-200 can produce markers down to 25 Hz suggests other uses for it – perhaps as an oscilloscope calibrator/timebase and audio signal generator. By interrupting its supply voltage, it could even be used as a code practice oscillator (making an interesting initial dual investment for the serious SWL who's about to become a Novice).

As fine an instrument as the FS-200 is, it did present a minor problem. It was another little convenience gadget for the shack that needed another 9-volt transistor radio battery. Though they're inexpensive and easily available free at Radio Shack (using their "Battery Club" card, of course), each time one poops out, I have to open up the cabinet and replace the battery, a slightly inconvenient task when done repeatedly. The addition of the FS-200 brought into focus the need for a small "cheapie" power supply, providing a source of multiple low-voltage outputs. The FS-200 could provide the "piggyback" vehicle for it, along with some simple interface circuitry for the calibrator. The only modifications required on the calibrator were mounting two rear-apron miniature phone jacks (external power and key), running leads to the battery clips, and mounting an RCA phono jack on the rear apron for rf output (wired in parallel with the front-panel BNC jack). Be sure to remove the PC board while drilling to prevent possible damage to the components.

The circuit in Fig. 1 is what evolved. Mounted in a 3-1/4" x 2-3/16" x 4" minibox (Radio Shack #270-251 or equivalent) and connected to the FS-200 by a short length of cable, it provides interface circuitry for the calibrator and a means of low-voltage power distribution. The circuit provides direct receiver rf output coupling for the FS-200, a small antenna or auxiliary rf output, and adjustable rf and audio outputs. Also provided are nonregulated 6- and 12-volt outputs, as well as regulated 9-volt outputs to power various and sundry gadgets; regulated power for the FS-200 is simply routed back to it through a short length of cable. Using a closed-circuit jack on the FS-200 rear apron allows internal 9-volt battery operation when external power is removed. An LED provides power-on indication for the interface/distribution box. Wiring follows conventional point-to-point practice.

The power source used for the unit is simple. I located two junk box ac adapters (battery eliminators). One provides about 12 V dc (no load) at 300 mA, and the other supplies about 6.2 V dc at 300 mA. The 12-, 9-, and 6-volt circuits are kept separate to keep interaction down and regulation simple. Zener diodes in the 9-volt circuit provide a small degree of voltage regulation. Though the output of the battery eliminator (ac adapter) doesn't have enough real current reserve for good regulation under heavy loads, it can easily power most of the small low-current accessory devices which require four penlight cells or 9-volt transistor radio batteries as power sources. A 9-volt adapter can be used if a 12-volt unit can't be located, with the dropping resistor values changed accordingly. Voltage regulation would, of course, be minimal. No attempt was made to regulate the 6-volt circuit, though this could be done if necessary for your purposes.

In any case, ensure that the adapters used are not cheapies having a direct connection to the ac line, which would present shock and grounding-out problems. Also, most adapters are not adequately filtered to provide good dc output. High-value electrolytics (1000-3000 uF) across the supply lines will do much to filter out any trace of hum or ripple.

Various types of connectors can be used on the piggyback box for audio, rf, and power connections, whichever meet your needs. I used RCA-type phono jacks for rf (routing the receiver coax antenna lead through the unit for signal injection), RCA-type phone jacks and miniature Amphenol-type mike connectors for audio, and miniature phone jacks for dc

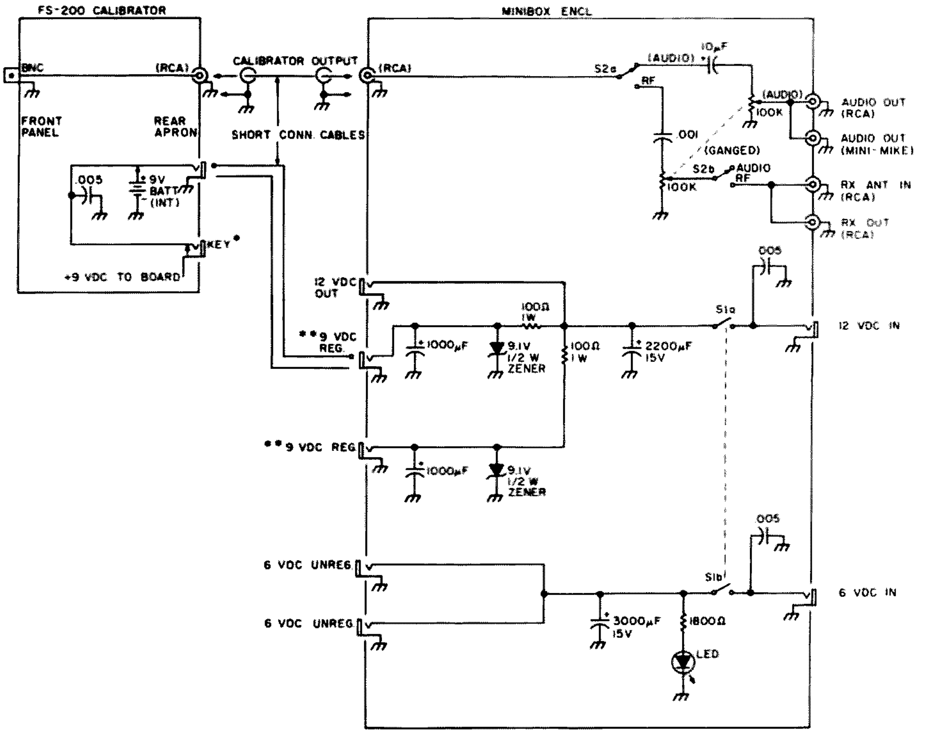

*Fig. 1. Interface diagram. Additional 6-, 9-, and 12-volt outputs may be added as desired. All values are nominal. You may have to experiment with zener and LED dropping resistors for best performance. *Insulated from the chassis (mounted on the plastic rear apron of the FS-200). **Low-current drain (20-30 mA). Use high-wattage zeners and dropping resistors for higher current capacity. Use separate zener circuitry for each regulated device.*

power input and output. (Note that if you use the calibrator with a transceiver, you will have to provide some means of switching it out of the circuit on transmit to prevent transmitter output from damaging the unit. If your transceiver has an "external receiving antenna" input, you can usually route the output there – check your transceiver's schematic first!)

Suggested application notes and circuitry are furnished by the manufacturer or can be found in good texts, such as the ARRL *Radio Amateur's Handbook*, Bill Orr's *Radio Handbook*, and 73's *Radio Frequency Testers* or *Audio Frequency Testers*. These can be consulted for interface ideas for your particular purposes.

For code practice, it's easiest to simply run the rf output directly into the receiver. The FS-200 is acting, in effect, as a mini CW oscillator. The receiver doesn't even need a bfo. By playing around with the "range" and "multiplier" switches, you can come up with MCW (modulated CW). Try it for code practice – it really works.

Don't try to use the piggyback supply for IC circuits requiring good regulation under heavy load; it isn't designed for such use. But, for the multitude of simple projects and gadgets (audio filters, compressors, preamps, signal generators, etc.) requiring but a nominal source of low-voltage dc, it fills a real need at a minimum investment, not tying up an expensive, heavy-duty regulated dc supply. If you don't own an FS-200, try building the power distribution box anyway. You'll find it will interface well with other less versatile calibrators, signal and marker generators, and audio generators, and the power supply will indeed come in very handy when the battery in your speech compressor or keyer fails! ■

Sometimes A Kit Is Best

—*Bullet power supply kit exposed*

A. A. Wicks W6SWZ
30646 Rigger Road
Agoura CA 91301

As more and more amateurs upgrade their 2 meter transceivers to 20- to 35-Watt output units, there has been a corresponding increase in interest in higher-current power supplies for base station use of this mobile equipment.

Unless your junk box is stocked with late-model parts, it is usually necessary to purchase expensive components, in addition to designing or researching a proven supply circuit. The job of assembling a suitable power supply has been simplified by some firms offering kits of parts, but in only a few instances have these suppliers come up with adequate kits for the higher current needs with amateur transmitter applications in mind.

Aware of this problem, Bullet Electronics is now offering a new kit which meets the essential needs of tested design, quality parts, and low cost. In fact, I was amazed, upon receiving this very complete kit, to see the careful attention that has been given to the preparation of it – especially as it would benefit the person who has few facilities at his disposal. As an example, even the mica insulators for the power transistors are supplied precoated with silicone grease and in leakproof envelopes. This, at first, caused me to think that the insulators were missing and that the envelopes contained only compound; however, I was happy to discover that all of the "dirty work" had also been done for me.

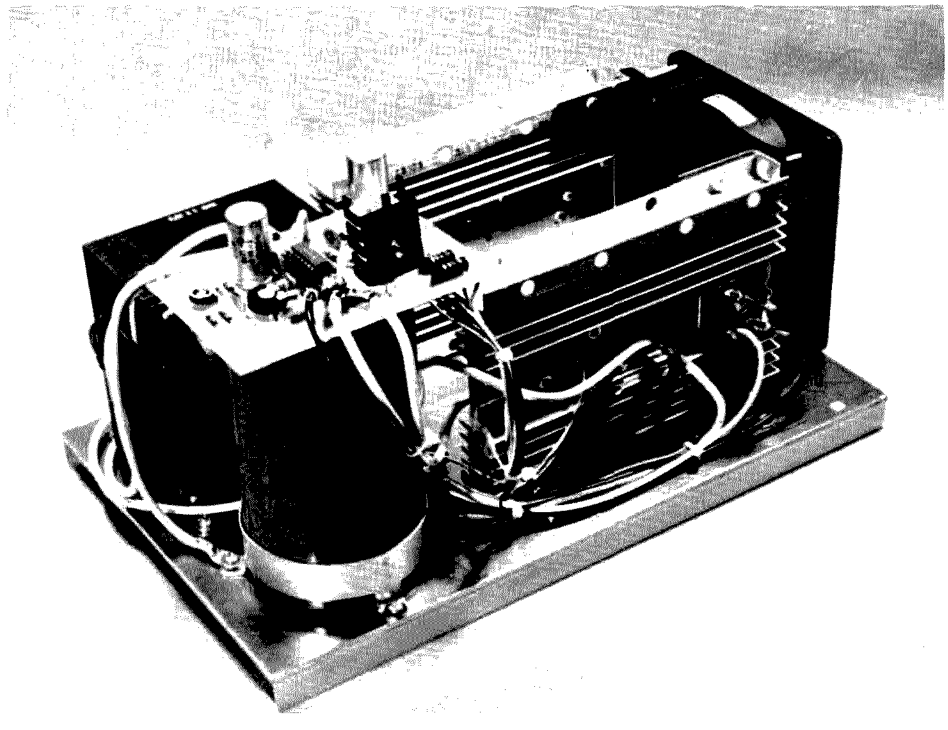

Bullet Electronics PS-14 power supply assembled. All parts shown are supplied with the kit, except the fan and base.

Nothing, including miscellaneous hardware, has been omitted from the kit. But the user must provide his own chassis (which may be anything from a board to a chassis-cabinet combination) and any optional items which may enhance the user's needs, such as meters, switches, etc.

The electronic parts are premium brand-name units, and, probably as a result of this, Bullet provides a 90-day warranty on all of them, including the heavy-duty power transformer. An excellent quality fiberglass printed circuit board is used for all of the control and regulation component circuitry. Plating is smooth and even, and all traces are sharply etched. Bullet has certainly overcome some of the problems in this respect that were evident two years ago.

The technical manual provided with the PS-14 is very complete, comprising 12 pages of theory, parts list, tools required, constructional details, testing information, and a troubleshooting guide. The latter section, contrary to the usual kit manuals, provides not only information regarding difficulties caused by improper assembly, but also extensive information in the event of component failures at some time in the future. Eight line illustrations are included in the manual, as well as one printed circuit board layout drawing and a total schematic containing all necessary test point voltage references. One additional general information sheet provides valuable information to guide the constructor in installing parts (good for any kit), handling integrated circuit devices, soldering techniques, and component color coding.

As will be noted in the

schematic, the heart of this closely-regulated power supply is a type-723 integrated circuit precision voltage regulator. The term "regulated" is really significant here — with 200 millivolts being the variation between no-load and full-load conditions. The 723 is a silicon monolithic device, which can provide voltage regulation at any voltage between 2 and 37 volts. However, this supply is designed to provide voltages between 11.6 and 13.5 volts, specifically. This useful IC includes within its circuitry a temperature-compensated reference amplifier, an error amplifier, a power series transistor, and a current-limiting circuit. In addition, a 723 provides independently accessible inputs for adjustable current limiting and remote shutdown. Low-temperature drift and high-ripple rejection are other features of this device.

Bullet has taken advantage of these attributes and has put it all together in this power supply. Their specifications for the PS-14 power supply are shown in Table 1.

Briefly, the operational theory of this supply is described in the following (refer to Fig. 1).

A reference voltage is obtained at the 723 pin terminal 6, V_{ref}, which is used to provide a stable voltage to the noninverting input, N_i, at pin 5, The latter is an input error amplifier within the IC. R4 and C4 provide noise filtering for this reference voltage.

A voltage divider (R14, R15, R16), permits the inverting input, I_{nv}, pin 4 of the error amplifier, to "look at" some percentage of the output voltage. Variable potentiometer R15 allows the voltage to be adjusted approximately 20%.

The result is that the voltage at I_{nv} matches the voltage at N_i as long as the voltage remains at a constant value. However, should the output voltage commence to increase, the voltage at I_{nv} increases, and the internal drive transistor starts to shut down. In turn, the drive is reduced to the series-pass regulators Q1, Q2, and Q3, thus reducing the output voltage. Conversely, the output voltage will be increased if it has commenced to fall.

Q3, Q1, and Q2, mentioned above, form a Darlington circuit that acts as a single PNP transistor. R6 and R7 assist in controlling current "hogging." C5 prevents the high-gain series pass circuitry from oscillating.

Usually in voltage-regulated supplies that use a 723, the current limiting on the 723 is provided by a resistor in series with the output, which develops 0.65 volts at the desired maximum current. This current switches on the current-limit transistor to reduce the output. Bullet concluded that this would have two disadvantages — one, at 17 Amperes the calculated resistor would be 0.038 Ohms at 12 Watts, which is not exactly your corner-store

Output voltage:	11.6 to 13.5 dc volts
Output current.	15 Amperes (continuous) 20 Amperes (intermittent)
Current limit:	10-20 Amperes (guaranteed range)
Regulation:	200 millivolts no load to full load
Short-circuit current:	10 Amperes maximum, 3 Amperes typical
Ripple:	Less than 1% at full load
Thermal shutdown:	Variable from ambient temperature to greater than 200° Celsius (392° F)

Table 1.

resistor; two, the total dissipation of the pass transistors would reach 300 Watts in a short-circuit condition. The circuitry selected for the PS-14, then, uses a unique foldback current-limiting design which uses the output fuses as the series current-limit "resistors," with a current adder circuit.

Once again referring to Fig. 1, note that R5 is across the base-emitter junction of Q3. This provides a fairly constant voltage drop of 0.6 volts. Inversely proportioned to the value of R5, a current flows into V_C (pin 11) of the 723. Additionally, a current that has a value of I_{out} divided by the gain (H_{fe}) of the Q3-Q2-Q1 configuration is present at the base of Q3. Since this total current enters V_C, it will exit via V_O (pin 10) and go into the current-limit transistor at C_i, pin 2.

The component values in the PS-14 allow the current flowing out of V_O to be approximately 25 mA (R5 plus Q3 current). This current then flows into the junction of R10 and R11, causing a voltage to appear across these two resistors. This will make the junction about 0.6 volts greater than V and C_S. Normal turn-on voltage required is 0.65 to 0.7 volts.

As the current increases, the additional voltage drop across fuses F1 and F2 is required to activate the current limit — the closer the

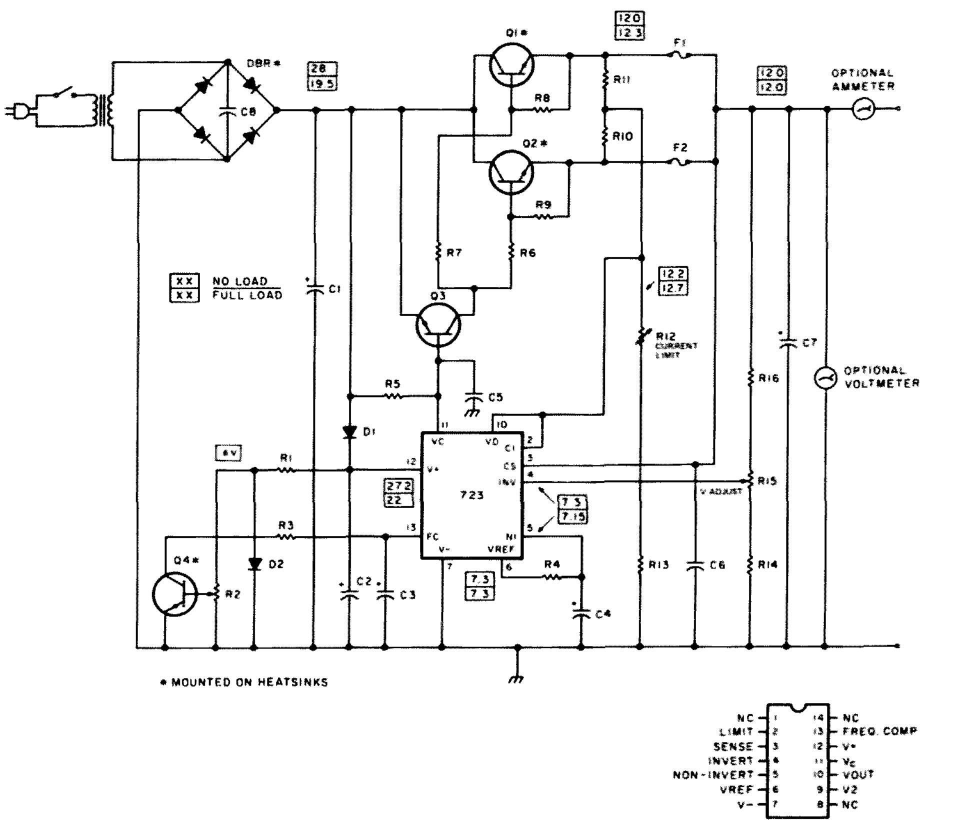

Fig. 1. Schematic of Bullet Electronics' P-14 high-current regulated power supply.

wiper of R12 to R13, the higher the current limit will be.

In addition to the foregoing, R10, R11, R12, and R13 also function as part of the foldback current circuit. A fraction of the output voltage is used to oppose the voltage across the current-limiting fuses and the voltage generated by the circuit described in the preceding paragraph. Current limiting does not occur until the voltage across the sense resistor is higher than this opposing voltage. When the output is shorted to ground, the opposing voltage is no longer present; therefore, current limiting occurs at a lower level.

The thermal shutdown circuitry is standard. Theoretically, the base-to-emitter voltage (V_{be}) of a transistor decreases with temperature. For instance, turn-on for a silicon transistor at room temperature may be about 0.6 volts. As the temperature proximate to the transistor increases, this turn-on value decreases because of electron-hole breakdown. Now the turn-on voltage of the transistor at, let us say, 100° C. (212° F.) may be 0.4 volts.

In this configuration, D2, acting as a zener diode, provides 0.65 volts of regulated voltage to the upper point of potentiometer R2. The latter bias is adjusted below the turn-on point of Q4, for normal ambient temperature. Q4 turns on at approximately 4.8 volts, and this point is reached at 75° C. (167° F.). As Q4 conducts, the 723 at pin 13 shunts current from the base of Q4 via the collector, which in turn causes the 723 to operate, and the output voltage of the supply goes to zero.

Assembly of the power supply was very straightforward and was completed in six hours. Testing took another two hours, but this included some troubleshooting time because I had inadvertently connected the wires between the circuit board and the thermal shutdown transistor incorrectly. A very minor "operation" is required on the power transformer and takes about five minutes. The transformer was originally manufactured for another purpose, and this modification provides a winding configuration that produces 20 volts ac.

The PCB was a pleasure to assemble, due to the excellent soldering characteristics of the board, as mentioned. In my installation, I included a cooling fan, even though my present requirements will not exceed a 10-Ampere load. But, by building for possible future needs, I was able to do the necessary hardware and packaging at this time. Open-frame construction was used, which permits the aluminum "breadboard," as shown in the photograph, to be installed in a cabinet with a slip-on cover. The "optional meter" positions, as shown on the schematic, will be used with the meters installed on the front panel of the cover, together with switches for ac and the fan. (It would be very simple to arrange it so that the fan starts at some predetermined thermal point.) Incidentally, Bullet has meters available for this power supply, if desired. They also sell an overvoltage-protection kit that is directly compatible with the PS-14. Although not installed at this time, one of these will become part of my PS-14 very shortly, as it is very desirable to limit potentially dangerous voltages to expensive equipment. Incidentally, the PS-14 may also be used as a battery charger — with suitable diode protection, of course.

The PS-14 is priced at $39.95, including UPS charges (foreign orders should add $10 for shipping and insurance). It's available from Bullet Electronics, PO Box 19442H, Dallas TX 75219. ■

Coming In Out Of the Cold

—power supply for your mobile rig

Henry Olson W6GXN
P.O. Box 339
Menlo Park CA 94025

One of the largest areas of growth in the amateur radio and CB market in recent years is that of small transceivers for automobile use. Some of these have built-in 117 volt ac supplies, and some have them as options in a separate package. But there are certainly many around which either were never meant to operate on the ac mains or for which the ac supply was not bought at the time of initial purchase and is no longer available.

The regulated supply described here will provide a substitute for your car's +12.6 volt dc battery system for equipment that draws up to 3 Amps. This will enable you to bring the rig in the house and continue operation, if you don't have a separate home station. In fact, such a supply is even worth having around only for those moments when the mobile rig is "sick" and needs repair, so it's on the workbench, in the house. It's also handy when the other types of auto electronics (radios, tape players, etc.) go on the fritz.

The main things that this supply has that many simpler commercial transceiver supplies do not have are good electronically-regulated output and current limiting. The output voltage is adjustable from 11 to 15 volts, so low, normal, and high battery voltages can be simulated. At currents over 3 Amps, the supply drops out of regulation, and no more current can be drawn from it.

The circuit of the supply is shown in Fig. 1. Note that the power transformer (one of the most expensive items in most supplies) is made up of three old filament transformers. This technique is not as neat and compact as having a special transformer that delivers just the right voltage and current for the job, but most hams and experimenters have lots of old transformers around from the tube era. The three transformers, when connected in phase, produce about 15 volts ac, which gives more than +21 volts dc using a full-wave bridge rectifier and capacitor-input filtering.

The regulator is the old reliable National LM305H with 2N4037 and 2N3055 added to increase the current capability. The 2N3055 is still the cheapest high-current silicon power transistor around, and thus it has been chosen here. The 2N3055 must be well heat sink mounted, of course, since, at the worst thermal case (11 volts out at 3 Amps), it must dissipate nearly 20 Watts! For this reason, the 2N3055 has been mounted on a large finned aluminum heat dissipator. Just heat sinking it to the chassis or a small plate for dissipation is probably asking for thermal runaway problems to develop.

The regulator circuitry, excluding the 2N3055, is built on a small PC board which I use as a sort of

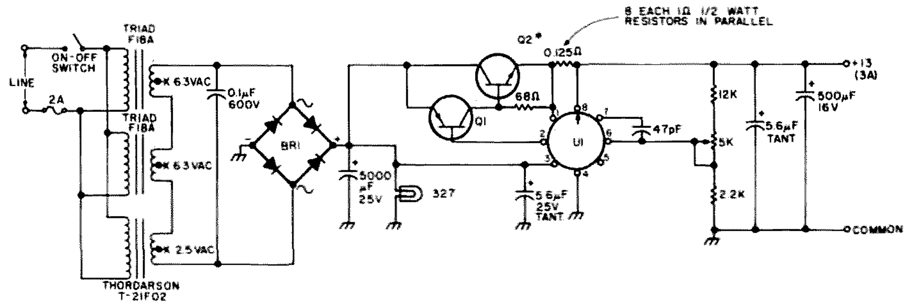

*Fig. 1. Regulated supply for small transceiver (with current limiting). *Heat sink Q2 to adequate finned aluminum dissipator.*

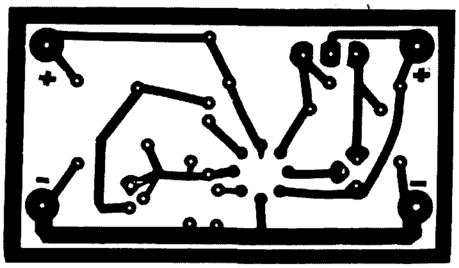

Fig. 2(a). Regulator board.

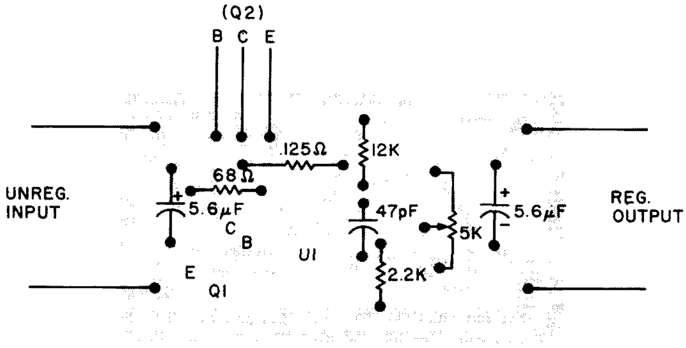

Fig. 2(b). Parts placement.

general purpose regulator card. I have these made up for my own experimental use, at a quantity price, and use them as needed. The layout of this PC board and the parts placement on it are shown in Fig. 2. This board is useful with an NPN-PNP pair of transistors, as in Fig. 1, a single PNP transistor, as in Fig. 3, or with the LM305H alone, as in Fig. 4. These three cases reflect decreasing magnitudes of output current. The details of how to design for the three cases are discussed in detail in references 1, 2, and 3. Note that the PC board is laid out so that a multiturn linear trimpot (such as a Beckman 78PR5K) can be put directly on it. A single-turn trimpot (such as a Beckman 62PR5K) can also be mounted directly on the board. If a standard pot is used off the PC board, care should be taken to mount it only a few inches away to prevent the regulator from becoming unstable.

There is, of course, some flexibility in the types of power transformer you use for this supply. You might use one 6.3-volt and one 10-volt transformer (16.3 V ac total) or one 10-volt and one 5-volt transformer (15 V ac total), but whatever you use, the dc output voltage across the filter capacitor *must not drop below about 17 volts*. By this I mean *absolutely* not below 17 volts, even at the bottom points of the ripple, or the regulator will drop out of regulation.

If you're in doubt as to whether your particular transformer(s) will work, haywire up transformers, bridge rectifier, and filter capacitor and put a resistive 3-Amp load on this rectifier-filter combination. A dc scope on the load should look like Fig. 5, and the minimum voltage, as shown, should not drop below about 17 volts. You ought to consider using one of the older TV power transformers, which have a high current 6.3-volt winding plus a 5-volt winding (usually 3 Amps, to operate a 5U4G), as one source of part of the series ac voltage. The high-voltage windings would be carefully taped up in this usage.

On the semiconductor list, there are a number of substitutes, including the widely-available Motorola HEP types for the discrete components. The one IC originated by National Semiconductor is second-sourced by Advanced Micro Devices, Fairchild, Intersil, Motorola, Raytheon, Silicon General, and Texas Instruments.

The supply was built on a 7" x 9" x 2" aluminum chassis with the three transformers to the rear. The wiring of the ac primary switch and fuse and the wiring of the rectifier-filter section are underneath the chassis. The regulator board and heat sink with the 2N3055 are on top of the chassis (for ease of voltage trimpot adjustment and air convection, respectively). No meters or enclosed cabinet were used in this supply, because they would increase the cost considerably. Judicious choice of meters from surplus emporiums and similar cabinet procurement could allow you to have a nicely-finished bench supply. This detail is, of course, up to the builder. ■

References

1. National Semiconductor, *Linear Data Book,* June, 1976, pages 1-7 to 1-11.
2. National Semiconductor, *Voltage Regulator Handbook,* May, 1975.
3. National Semiconductor, *Linear Applications,* Feb., 1973, pages AN-23, LB-7, LB-10.

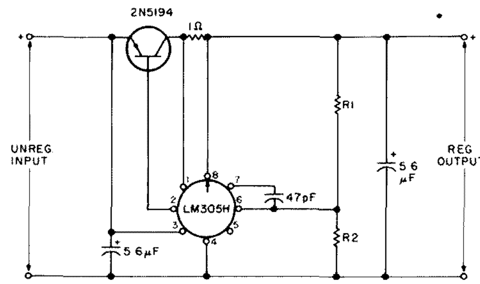

Fig. 3. LM305H with PNP medium-power transistor used as medium-current regulator.

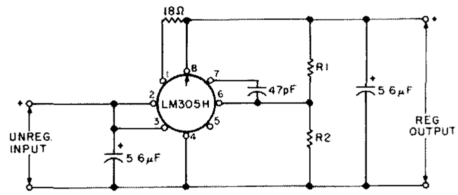

Fig. 4. LM305H without external transistor used as low-current regulator.

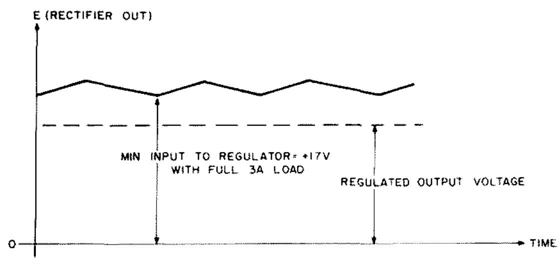

Fig. 5.

Parts List

BR1	3-Amp bridge rectifier, Motorola MDA970-2 or HEPR0876, or 4 each 1N4720 or HEPR0091 (wired as bridge)
Q1	2N4037 or HEPS3012 (Motorola)
Q2	2N3055, MJE3055, or HEPS7004 (Motorola)
U1	LM305H (National) or MLM305G (Motorola)

Bob Renaud
39 Ontario Street
Pittsfield MA 01201

Roy Rogers Special: Triggered Sweep

—*lab scope performance for less than a gigabuck*

In any shack, lab, or shop, the most important test instrument is the oscilloscope. However, most scopes used by the home experimenter, unless funded by grants from the Rockefeller Foundation, are the "service" type – not too fast, and cursed with recurrent sweep. For that problem, this article offers a solution.

Before going further, let's look at the two types of sweep used in scopes. The most common is called the "recurrent" sweep and is, when all is said and done, a glorified sawtooth oscillator with provisions for injecting sync pulses to warp its free-running frequency slightly. To achieve a stable display, the input frequency must be equal to or a multiple of the sweep's frequency, and drift in either will result in the familiar swirling miasma of traces.

The "triggered" sweep, used in lab-type scopes, is also a sawtooth-generating circuit, but is not an oscillator. It might be compared to a one-shot, initiated by a pulse that represents a particular point on the input signal. When the sweep is complete, it retraces and waits for the next pulse, however long it might take.

It can be seen, then, that the input frequency or rep rate is irrelevant because the sweep is locked to it at all times, and the display is rock steady. Interestingly, the period of the input may be far longer than the actual sweep, which is impossible with the recurrent sweep.

For digital work, the triggered sweep is just about imperative for any serious observation, and, in any case, it's the way to go. Unfortunately, modifying a service scope's internal circuitry to achieve it is apt to evince the omnipotence of Mr. Murphy's famous law, in spades.

The QD-1 triggered sweep adapter (short for Quick and Dirty) is designed to avoid that hassle. It plugs into the scope's horizontal input jack and uses its X-amplifier to drive the trace. The internal sweep circuits are unaffected.

Offered by this plug-in are such niceties as ac/dc input coupling, selectable slope (rising or falling), trigger point selectable by switch to either ground or a variable level, a very linear ramp, excellent stability, dc-coupled sweep voltage output, a blanking output, and a mini-sized price tag (practically zip if your goodies box is fat and happy).

You won't wind up with a Tektronix or a Hewlett-Packard, but your wallet will thank you.

Circuit Description

The operation of the sweep is straightforward, with no cute little subtleties hidden amongst the resistors. The input signal is coupled via C1 (S1 for dc), through sensitivity pot R1 and resistor R2, to one common of S2. The trigger level signal, either ground or a voltage from level pot R5, is selected by S3 and applied to the other common of S2. When R2 is connected to IC1A, pin 3, the circuit is set to positive slope; it's negative when tied to pin 4.

In either position, when the "+" input becomes more positive than the "-" input, the output of the comparator goes high (note the absence of a pull-up resistor to pin 1; the circuit operates more stably without it), and the one-shot, IC2, pulses. Its $\overline{Q}$ output emits a 25-30-nanosecond negative pulse, which sets latch IC3A, B.

When set, IC3B's output goes low, turning off Q2, Q4, and Q5. In order: Q2 releases the ramp line from ground, and the timing capacitor begins to charge through constant current source Q3; Q4 allows divider R10-R11 to set a 13-volt reference to the "+" input of IC1B; and Q5 collector voltage rises to 15 volts, unblanking the scope.

When the ramp voltage rises sufficiently, it forward biases D1, and the "-" input becomes more positive than the "+" (reverse of IC1A). IC1B's output goes low. This resets the bistable latch and turns on Q2, Q4, and Q5. Again, in order: Q2 shorts out C_T and the sweep voltage plunges toward ground, retracing the sweep; Q4 grounds the reference voltage, the purpose being to assure that the comparator output remains low until the retrace is fully completed (without Q4, as soon as the ramp voltage became less than V_{ref}, the comparator output would go high, making the latch susceptible to re-triggering pulses before the sweep has time to retrace, resulting in erratic fore-shortened sweeps); and Q5 goes to ground, and the 15-volt negative change, coupled by the scope's Z-axis capacitor, would blank the scope as though the cathode itself were made that much more negative.

Once the ramp-line voltage becomes lower than the forward voltage of D1, with respect to the "+" input, the comparator output goes high, the latch is opened to the next trigger pulse, and the cycle repeats.

The sweep output is coupled via emitter-follower Q1 and is of low enough impedance to resist loading by most scope X-axis inputs.

The 13-volt ramp is more than adequate for full-screen sweeping at a moderate setting of the horizontal gain control.

Miscellaneous Information

The ramp voltage is positive going, and your scope may well trace from right to left as a result. This is cured by a DPDT switch to reverse the CRT's horizontal plates when using the QD-1.

If your scope is not equipped with a Z-axis input, locate the lead tied to the cathode of the CRT and connect it via a .1 microfarad capacitor to a jack for the blanking input. Be sure the capacitor is rated for the cathode voltage, which can reach positively transistor-frying levels.

On ac-coupled scopes, a lateral drift of the trace will be noticed as the sweep rate or input frequency/period is changed. This is due to the variable duty cycle of the triggered sweep (the ramp is constant, but the rest time varies) and is unavoidable. It's a minor nuisance and can be lived with in view of the superiority of the triggered sweep. Dc-coupled scopes have no such problems, of course.

If the bandwidth of the X-axis amplifier in your scope is limited, you'll notice shortening and distortion of the trace at very fast sweep rates, typically less than about 2 microseconds per centimeter. This is a minor problem, and you'll learn at what point your scope can't hack it any more. Rest assured, though, that your QD-1 is putting out the correct sweep waveform even up at those whiz-bang speeds, as a faster scope will verify.

In ac-coupled scopes, very slow ramp speeds will distort due to the inability of the internal coupling capacitors to pass the signal without differentiating it. If you want to use yours for a medical monitor, get a dc scope and go as slowly as you please.

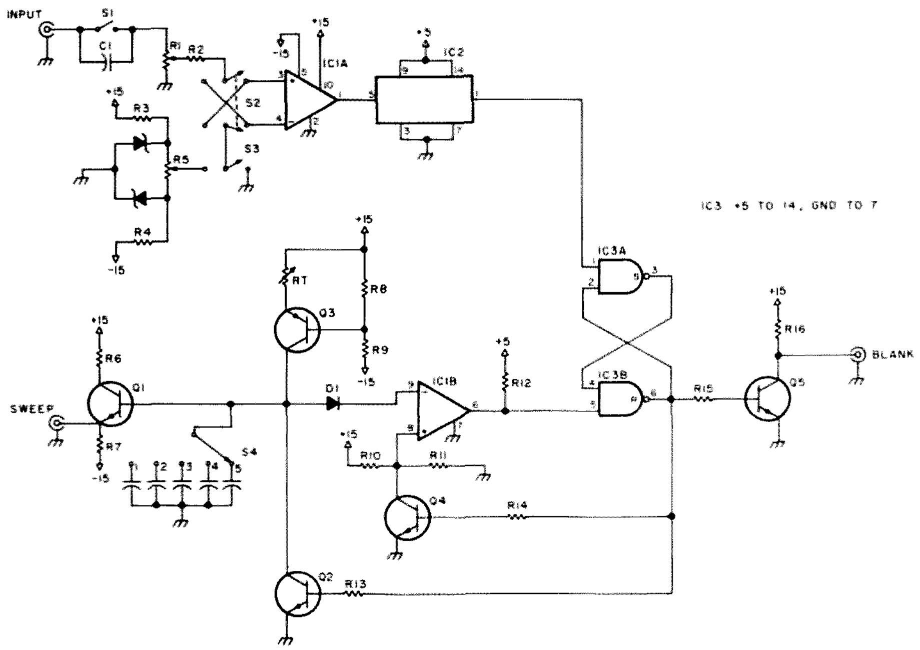

Fig. 1.

The value of the timing resistor, R_T, is given as a 220-Ohm resistor plus a 2k pot. If you're of an ambitious bent, you can set up a series of R_T/C_T combinations, each set to a calibrated sweep rate such as found on the better scopes. The values of C_T given in the parts list will cover the usable range that can be passed by the typical service scope.

If you elect to use different voltages than the plus/minus 15 of the schematic, dividers R8-R9 and R10-R11 will require tweaking to establish operating points at the new voltages.

The zener diodes used in the reference circuits for the level pot are from 3 to 5 volts, whatever you have handy. Don't go too much higher, though, because the allowable operating differential voltage between LM319 inputs is ±5 volts. (This is the other function of D1, by the way. It keeps destructive differential voltages off the inputs of IC1B.)

Construction can be by any suitable technique. I used wire-wrapping for ease of modification and assembly, but, if you wish to whip up a PC board, go to it. The only high-speed stuff in the circuit is the pulse from the one-shot, and whether or not it's capacitively coupled to something else is of no particular importance.

Although a pull-up resistor is omitted at the output of IC1A (pin 1) for stability, it is required at the output of IC1B (pin 6) if proper operation is desired. Hours of hair-yanking and spasms of voluminous purple prose preceded both of these discoveries.

As the input frequency/rep rate rises, it will be seen that the leading edge of the displayed signal is clipped or truncated. This is due to the inevitable response delays in the sweep circuitry and the horizontal amplifier.

In expensive scopes, a delay line is inserted in the vertical signal circuitry, which, as the frequency increases and the sweep rate in use goes faster, effectively delays the input to the Y-plates until the sweep has time to react to the trigger

Parts List

IC1	LM319 dual comparator
IC2	SN74121 one-shot
IC3	SN7400 quad 2-input NAND
Q1, Q2, Q4, Q5	2N2222 NPN transistors
Q3	2N2907 PNP transistor
R1	100k pot
R2	100k, ¼-Watt resistor
R3, R4, R13, R14, R15	2.2k, ¼-Watt resistor
R5	10k pot
R6	510-Ohm, ¼-Watt resistor
R7, R9, R11	10k, ¼-Watt resistor
R8	390-Ohm, ¼-Watt resistor
R10	1.5k, ¼-Watt resistor
R12	1k, ¼-Watt resistor
R16	5.1k, ¼-Watt resistor
C1	1 uF, 50 V ceramic capacitor
Zeners	See text
D1	Silicon switching diode, e.g., 1N914
R_T	220-Ohm, ¼-Watt plus 2k pot.
C_T	0.001, 0.01, 0.1, 1, 10 uF
S1	SPST switch
S2	DPDT switch
S3	SPDT switch
S4	5-position rotary switch

Input/output jacks, ±15-volt and 5-volt supplies, etc.

pulse. The delay itself is fixed, but it can be seen that it is needed less as the frequency goes down, more as it increases, and it's sufficient to display the trigger point of the input at any frequency.

If you'd like to try it, get a reel of coax, such as RG-58/U, and put a connector on each end. Take the trigger point from the INPUT and the feed to the vertical from the OUTPUT. If you know the length of the coax and the propagation speed, you can calculate the approximate delay.

Operation

The input signal to the sweep may be obtained by teeing from the vertical input of the scope, or by a separate lead tied to whatever trigger signal is required. Begin with the sensitivity at minimum, the level select switch to ground for ac-type signals, or with the input switch to ac for TTL-type signals, for example, that are above true ground. Bring the sensitivity control up slowly until a trace appears, then advance it until a steady trace is seen. If it's a logic signal, for example, switch the input to dc, the level switch to variable, and adjust the level pot to obtain the trace again.

While overloading the input isn't recommended, don't be afraid to crank up the sensitivity until a solid image is obtained. At very low frequency inputs, some instability may be obtained when the input's period is a multiple of the sweep's, but adjusting the sweep rate should cure it.

Other than those points already noted, I haven't any particular precautions to offer, except maybe a reiteration of the warning about the CRT cathode voltage and the capacitor ratings. A thousand volts running amuck amongst ICs and transistors can create a lot of silicon refuse in micro-short order. ■

VHF Transverters and the FT-101

—quickie FM conversion

Glenn Malme W6OJF
9337 Gotham Street
Downey CA 90241

Converting the popular Yaesu FT-101 series of transceivers in order to provide FM for use with a two meter transverter is a relatively simple job. Similarly, the Yaesu FT-620B six meter SSB, CW, and AM transceiver may be put on FM with the addition of nothing more than a few wires and a single-pole double-throw switch.

The modification of the FT-101 series will allow the user to have NBFM on ten meters and, when coupled with a transverter, to supply drive from the FT-101 for use with 6, 2, 220 or 432 MHz transverters with FM output.

All that this amounts to is that you switch the output of the audio board between its normal position (driving the modulator board) and the clarifier circuit, thus causing the vfo to change frequency in accordance with the superimposed voice frequency.

The surgery consists of wiring in an SPDT switch, as shown in Fig. 1, with a wire going to pin eight on PB-1315 and switching the white wire from pin eight to pin nine on PB-1183. One leg of the switch will have a wire running to the "Clari" pin on PN-1344 on the top of the set. The wire jumpers are accessed from the bottom of the radio.

The switch may be mounted at any convenient location, so don't drill a hole in the front panel. In one position, you have NBFM, and in the other, things are back to normal. When operating FM, you drive your transverter from the ten meter position, and you slope detect in receiving FM on the ten meter position. An AM filter in the FT-101 makes this quite acceptable.

The same basic scheme will allow the six meter FT-620B to generate good quality FM. Again, it consists of coupling the speech amplifier output to the clarifier circuit, so that the vfo is modulated. The mike gain control has to be properly set in both cases to provide anywhere from 3 to 7 kHz deviation.

First you mount a small SPDT switch on the rear apron of the transceiver. In looking at the bottom of the relay socket, the center pin (green wire) is the line that goes to the clarifier. Then lift the center conductor of the red shielded wire from pin 7 of PJ-301. Run two shielded wires to the SPDT switch, as shown in the diagram. Ground the shields, replace the covers, and test. In "normal," the AM, CW, and SSB are unaffected; however, switching to FM on the rear and AM on the front panel will give you 3 to 7 kHz deviation. This mode affects transmit only. Reception must be by slope detection, of course.

By following the diagrams, these simple changes should not present any problem. Be sure to use a small soldering iron in order to do the job properly. FM reception can be achieved by connecting a Signetics 5111A chip to the output of the last i-f stage and feeding it to the audio stage. The use of this chip eliminates slope detection. Instructions come with the chip when it is purchased and can be adapted to any type of AM receiver. ■

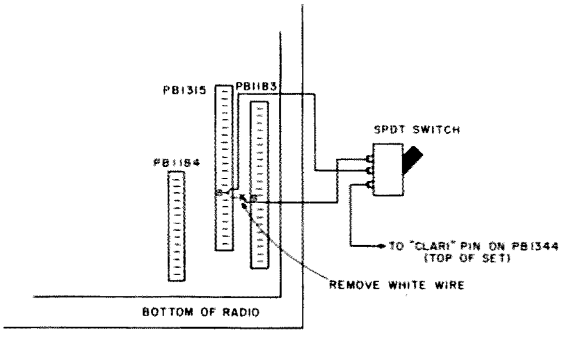

Fig. 1.

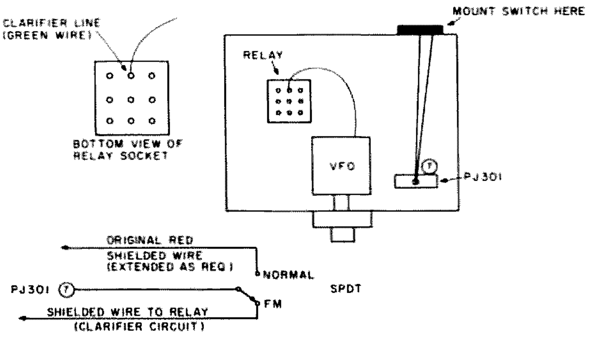

Fig. 2.

Leonard Hardland W3IHA
1012 Orchard Way
Silver Spring MD 20904

Instant Paddle

—cheap, too

If you can drill a few holes in some junk box materials, that is all the skill you need to fabricate an adjustable keyer paddle. In fact, even drilling can almost be eliminated by some alternative construction methods, if you do not have a well-equipped shop or if your junk box does not contain all the needed items.

The materials you will need for this economy paddle are two pieces of one-sixteenth-inch brazing rod about 4 inches long, 3 one-quarter-inch-diameter by three-quarter-inch-long brass spacer rods that are tapped for machine screws, and whatever pieces of Masonite™, Lucite™, Bakelite™, etc., you choose for the base and the paddles.

Shape the material you have selected for the paddles into a design that is appealing to your eye. A #51 hole should be drilled in the rear edge of the paddles, so they can be glued to the brazing rods. If edge drilling the paddles is too much of a challenge for your limited shop equipment, make the paddles from scraps of copperclad circuit board, and solder the rods to the foil.

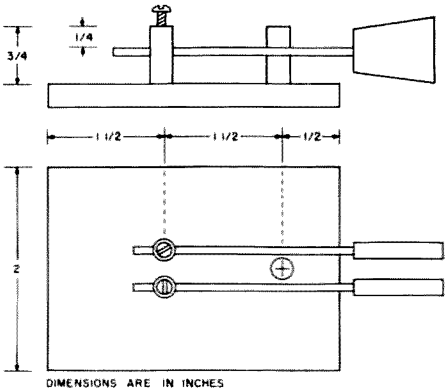

Fig. 1.

The supports for the paddle rods are made by drilling #51 holes about one-quarter inch from one end of two of the brass spacers. A simplified alternative to the drilled spacers is to utilize binding posts that already have a hole drilled for holding wires by turning down a thumbscrew.

The base dimensions are shown in the sketch, but none is critical. Mark a centerline on the base and a spot for the ground post mounting screw about a half inch from the front edge. Locate the paddle rod mounting posts about 1½ inches back from the ground post and to each side of the centerline a distance of one-eighth inch plus the gap you expect to leave between the paddle arms and the ground post. This means that, when the holes are drilled and the components mounted, the paddle arms will be parallel to each other.

If you are using binding posts instead of the brass spacers and you want the paddle arms parallel, you may have to stagger the positions of the fatter posts so they do not touch each other. This, however, should not cause an appreciable difference in sensitivity between the two paddles.

Drill the three holes for the post mounting screws and attach the posts, using a solder lug on each screw for convenience in attaching wires. Insert the paddle rods into the two posts, and tighten the top holding screws. Your paddle is now complete, except for adjusting the contact gap by rotating the paddle posts and obtaining the desired sensitivity by sliding the paddle rods back and forth in the posts. If the desired sensitivity cannot be achieved with the dimensions shown, drill a new hole for the ground post mounting screw about one-quarter inch backward or forward from the original position, depending on whether you want a stiff or pliant action.

Obviously this quickie prototype paddle takes no great prize for aesthetics, and you may want to convert it to a more permanent fixture in your shack. Once you have used it for awhile and determined the length of paddle rods for the preferred sensitivity, solder the rods in the posts and clip off the excess. You can also make adjustment of the paddle rods somewhat easier by soldering a screw head or sawing a screwdriver slot on the top of each of the two paddle posts. If you are concerned about contact resistance, go one step further and silver plate the contact area of the paddle rods and the paddle post. Polish these components and remount them on a heavy steel base finished with wrinkle or hammertone paint and you will have a paddle that has good performance characteristics and is pleasing to the eye as well. ■

Ross Thompson WA4FWR/5
1000 Mary Jane Circle
Killeen TX 76541

Watch the Wind!

—with this junk box anemometer

While most hams are worrying about their antennas, my concern is my newly hewn wind generator propeller. Since my garage doesn't come close to a machine shop, and my frugal nature abhors expenditure for an air brake or complex feathering device, the natural thing to do is crank down the tower or immobilize the prop for the high winds. But, when you can't spend all of your time in the yard watching the weather or stay awake all night listening, the first step is a wind indicator. Then, if you have a counter and an alarm circuit, you've got the system down pat. Well, the counter alarm comes next, but here's my answer to the indicator. This is an adaptation of one by Hank Olson W6GXN. Almost any small signal NPN transistors will do, and Olson's Electronics (Akron, Ohio) has the Fairchild µL914 for $1.39 (part TR 297). The RTL circuit is a little antiquated but very effective. It is easily mounted on the small printed circuit board from Radio Shack that accommodates the 914 and most of the smaller parts nicely. In case you are thinking of adapting to TTL, the circuit for the µL914 is in Fig. 2.

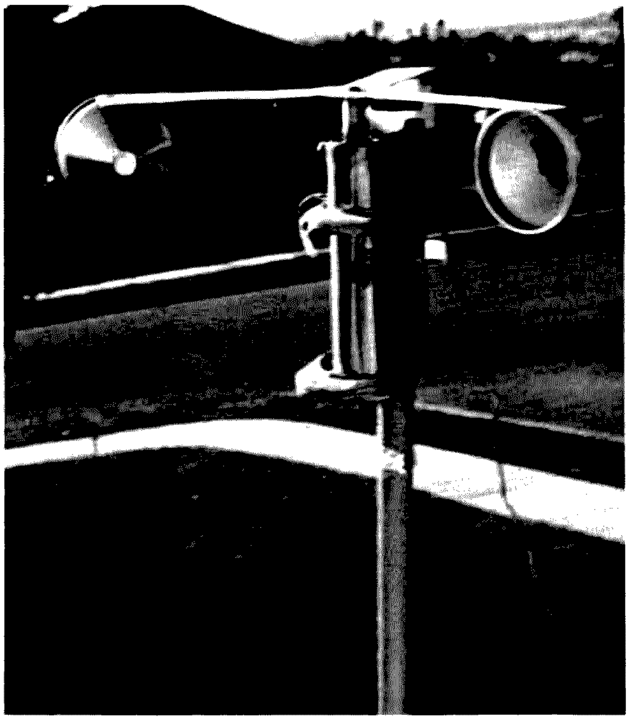

The wind spinner is made from three small kitchen funnels (49¢ each) attached using a pop-rivet tool. The spinner plate may be cut from 1/16" aluminum plate. A layout drawing (NTS) is in Fig. 3.

The mast can be any type you choose, but aluminum is best since it will not affect the field of the small magnets that pulse the reed switch. This was a small worry for me, however.

The reed switch was mounted in a hole through an expired felt-tip pen. It is offset mounted from the spinner pipe shaft by a bracket to be under and ¼" below the magnets.

Silicone compound from the hardware store filled the holes in the funnels (tips cut off) and weatherproofed the reed switch in its pen mounting. Silicone was found to be better than epoxy for holding the magnets to the aluminum spinner. Epoxy kept weathering loose no matter how clean the aluminum spinner was. An overall mounting detail is provided in Fig. 4.

Try several NPN transistors from your junk box,

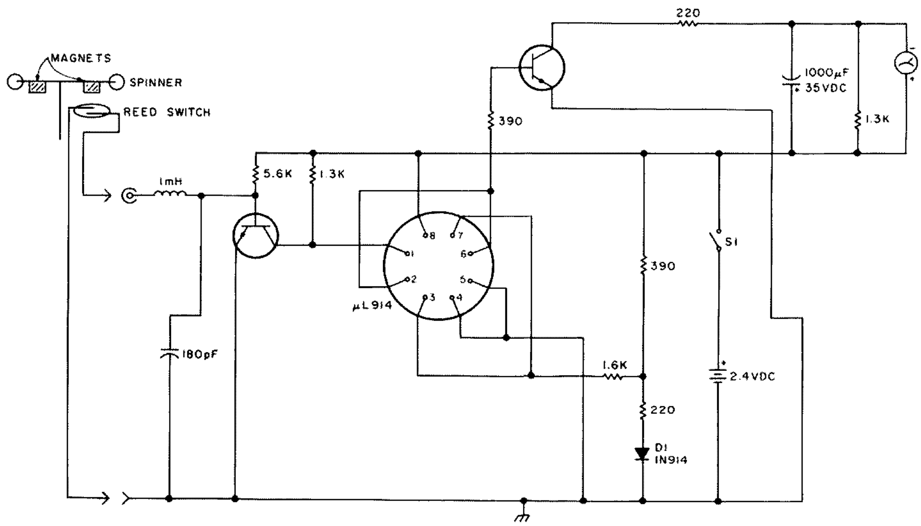

Fig. 1. Adapted from Ham Radio, *June, 1968, p. 52.*

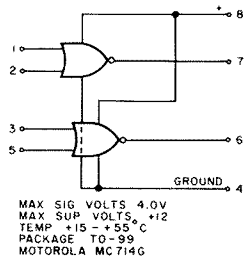

Fig. 2. μL914 detail (or Motorola HEP584).

since some are more responsive than others. The wire connecting the reed switch is your own choice, though coax is probably best. I used speaker wire, expecting to replace it every year or so. Rf induction did not appear to be a problem with the choke inside a 4" x 4" x 5" minibox along with the circuit.

Parts and Assembly

The single greatest problem in this design is the bearing. The original concept was to use a simple teflon bearing similar to the drill stop used for ¼-inch drills. This idea was not satisfactory. A perfect solution was the discovery that a standard (1¼") thin-wall chrome-plated drop pipe for a bathroom sink drain (about 6" long) would accept the standard roller bearing used in the bottom of sliding glass patio doors. Two of these bearings with ¼" center holes fit exactly into the drop pipe. The bottom one stops inside about 3½" down. The top one is held in place with a stainless pipe clamp tightened to hold. These bearings come in a brass version and an aluminum-teflon version. I used the teflon at the bottom and the brass one at the top. A ¼" shaft for the spinner was attached with a sheet-metal screw and "Lock Tite" compound. You may want to use a hole and cotter pin in the bottom of the spinner shaft to keep the spinner from crawling out of the bearing holes at higher speeds. The drop pipe was $1.67, and the bearings were $1.00 each, plus tax. My total investment was less than $6.00, not counting parts from my junk box.

Calibration

I used Hank's technique of a calm Sunday morning, family in auto, father with anemometer protruding over the top of the car from the rear of the station wagon, pencil and paper in hand, and mother driving and calling mph at speeds of 10, 20, 30, 40, 50, and 60. I stopped at 55 and found the relationship linear, and, with the plots for the five points, I extrapolated a curve on some of my daughter's school graph paper. I use the graph, but a scale could be drawn and glued to the meter face.

I'm really pleased with my creation and use it quite often, since the meter sits on top of my antenna coupler. To read it, I just flip the switch, read the meter, and turn off the switch to conserve batteries. It's been in service for more than a year now. ■

References

1. *Ham Radio Magazine*, "An Amateur Anemometer," June, 1968, p. 52.
2. *Ham Radio Magazine*, "An Experimenter's Guide to IC Substitution," September, 1971, p. 28.

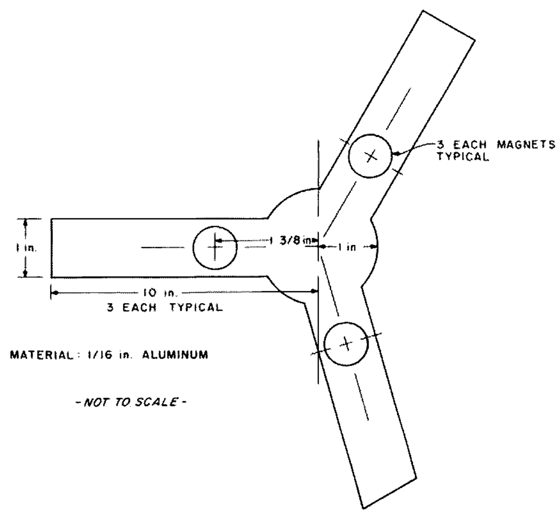

Fig. 3. Spinner details layout.

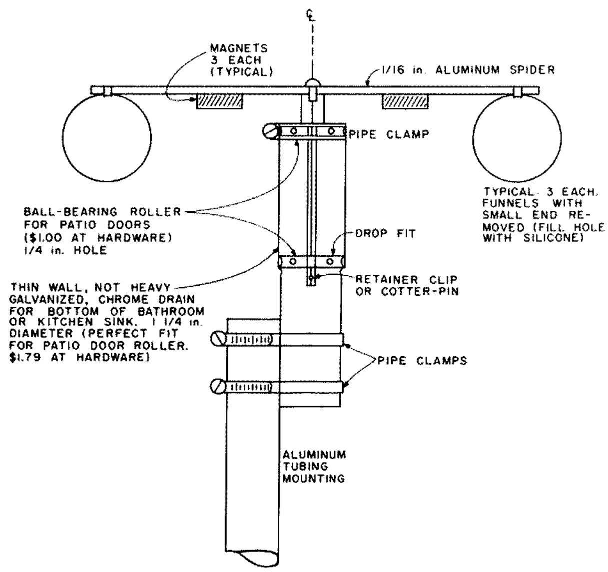

Fig. 4. Anemometer assembly detail.

J. Tom Badgett K8AO
1917 Washington Street
Bluefield WV 24701

The War Against Rust

—some good news for radio towers

Hams always are on the lookout for new products or new uses for old ones. That's why I was so interested in a recent West Virginia exhibition for coal miners. There were many interesting product exhibits, but one in particular was truly showstopping.

Bruce Weeber, president of Totally Dependable Products, Incorporated, was demonstrating the company's line of lubricants, penetrants, and protectors. Two beautifully finished pistols were installed on a revolving mount, so they could be dipped automatically in a salt water solution about twice a minute. Both weapons had been treated with TDP's "SS 2" Lubricant "Plus." Going around with the pistols were two untreated metal plates. I attended the exhibit on the second of three days, and the untreated plates were well rusted. Neither of the pistols showed any sign of rust or corrosion.

Weeber told me that even after days of such abuse, "SS 2"-treated metal isn't rusted or damaged. He showed me a variety of products with slightly different chemistry for different applications. I carried home sample cans of the "SS 2" Lubricant "Plus" and "SS P" Super Penetrant ("If you put that on a frozen nut, stand back so you won't be hit by flying metal," Weeber jokes) for some tough tests other sprays had failed.

First I tried a little experiment. I used a sander on my electric drill to buff clean four high-carbon hex-head cap screws, and I arranged them on a piece of ½-inch Styrofoam®, as in Photo A. I treated the first with "SS 2," the next one with "WD-40," the third with General Electric Silicone Lubricant, and left the fourth one untreated. The whole arrangement went outside in a drizzling rain. After only three hours, the untreated screw head was almost completely rusted over. The GE Silicone-treated screw was showing signs of rust. The other two still were bright and shiny. At five hours, the silicone-treated screw head was definitely rusting, but the "WD-40" and "SS 2" had maintained their protective coatings.

After 48 hours, it was still raining. Both the untreated and silicone-treated screw heads were solidly rusted. Rust spots had appeared on the "WD-40" screw, but the "SS 2"-treated screw head still was clear. Rust spots finally were visible on the "SS 2" screw after 72 hours.

Next I wiped the "SS 2" and "WD-40" screw heads clear of moisture and reapplied coatings of protective film. Eight days later there had been no noticeable change in either screw (see Photo B), so, apparently, both "WD-40" and "SS 2" give pretty good static moisture protection with maybe a slight edge going to the "SS 2" in light of the few hours of extra protection it gave in the beginning.

Next I tried some more practical tests. I've been looking for years for an all-weather, long-lasting, non-gumming lubricant for my bicycle chain. I had tried 'WD-40" and "LPS-3," but, in damp weather, daily applications were a must. The "SS 2," however, soon proved itself. I ride through rain, mud, and grime, making frequent cleaning necessary. But with the TDP lubricant, I don't

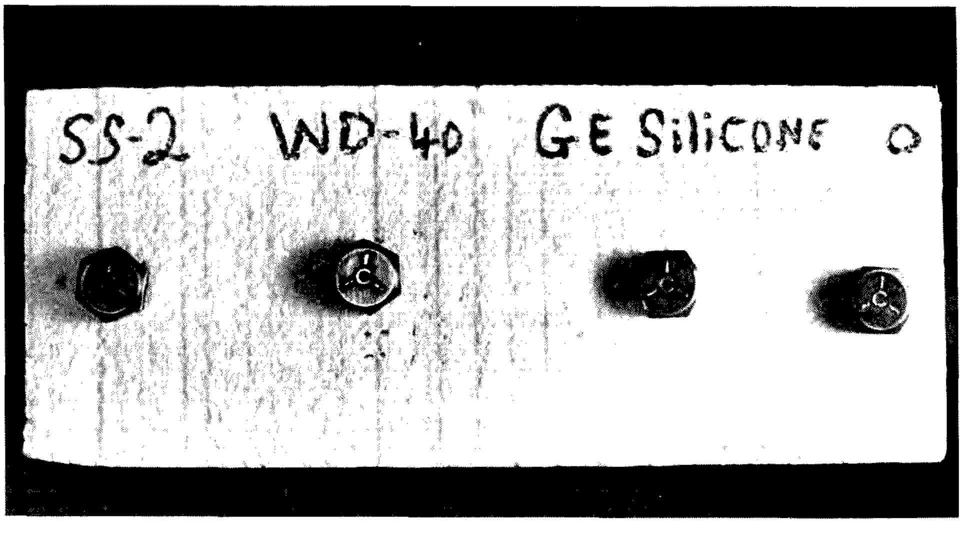

Photo A. The screw heads after cleaning but before treatment with any lubricant/protective film.

have to worry about rust, and the time between cleanings is longer.

I've carried a pocketknife for years, and I've always believed in nonstainless steel blades. But that presents another problem: rust due to pocket moisture. Regular cleanings at short intervals have been my practice. I've found that treating the knife first with "SS P" to clean off everything and then spraying on "SS 2" about once a month will keep my knife blades clean and bright.

I'm finding many ham shack applications for "SS 2," which seems to be the best general-purpose product. Feeler gauges, pliers, wrenches, and other tools prone to rust stay clean a lot longer, even under heavy use, with an "SS 2" coating. It keeps nails, screws, and other hardware bright and clean before and after use and prevents fingerprint tarnish on equipment chassis and circuit boards. The darn stuff seems to fill about any lubricating/protecting need you can think of.

The TDP line is varied, each formula slightly different for specific needs. For example, "SS 1" is primarily a penetrant, designed to loosen frozen parts and dislodge grease, dirt, light rust, and tar. It has the "plus" of leaving a light (0.04 mil) dry lubricating and protective film. "SS 2," on the other hand, is primarily a lubricant. It still has penetrating power, but it has four times the lubrication and protection of "SS 1." Both products are nonconductive and are harmless to metals, wood, rubber, painted surfaces, and "most plastics." So far I haven't noticed that the "SS 2" has harmed any plastics. And there's "SS P" which has even more penetrating power than "SS 1."

I've noted a few of the TDP products in Table 1. My personal experience is limited to "SS P" and "SS 2," but reports from other users tell me the various preparations are equally reliable. Everyone who uses the products becomes an immediate convert, as did Bruce Weeber. He is an accountant by training and trade, but jumped on the bandwagon when chemist Earle Bidgood, developer of the original formula, first showed him the product. TDP apparently is a new company, and the products may not be widely distributed through retail outlets. You can get more information from Totally Dependable Products, 513 High Street, Pottstown, Pennsylvania 19464. ■

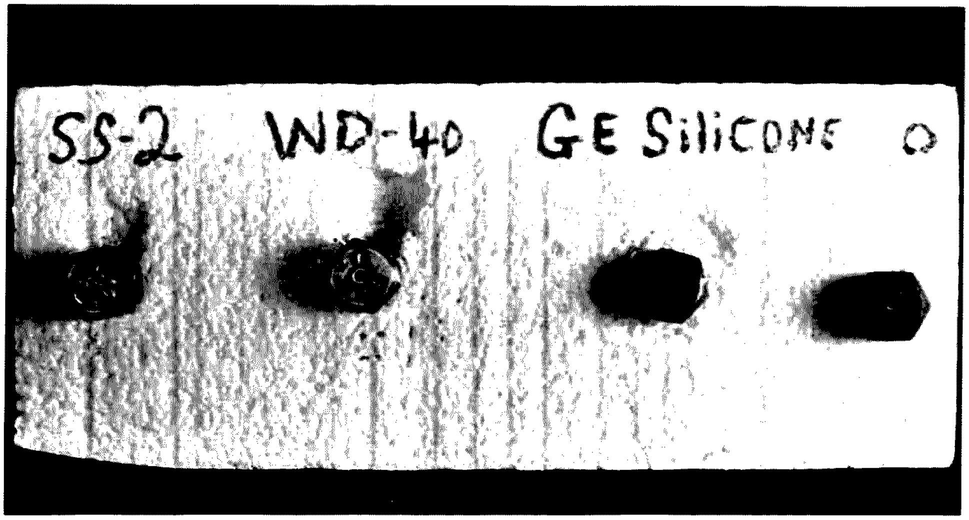

Photo B. The experiment after 11 days. Rust spotting is evident on both "SS 2"-and "WD-40"-treated screw heads, but the spots showed up under the "SS 2" coating at least 24 hours later than on the "WD-40" treated screw. Both products appear to offer adequate protection against spreading rust. I stepped on the experiment on the last day, causing the impressions under the "SS 2" and "WD-40" screws. The dimpling around the silicone-treated screw, however, was caused by the spray itself; it "melted" the Styrofoam®.

"SS 1"	Penetrant "Plus"
"SS 2"	Lubricant "Plus"
"SS P"	Super penetrant
"OR 1"	Rust remover
"RS 2"	Rust stopper
"PE 1"	Precision electrical cleaner (volume controls, tape heads, relays, etc.)
"PE 2"	Special electrical cleaner for use with Polycarbonate plastics
"MP 1"	Dry-formula machinery parts cleaner
"MP 2"	Wet-formula machinery parts cleaner
Stock Slick	Wood cleaner and preservative, primarily intended for gun stocks

Table 1. Most TDP products come as aerosol sprays at about $2.25 for 6 ounces. Twelve-ounce, gallon, five-gallon, and 55-gallon sizes also are available. All products are nonconductive and generally safe to use on electrical circuits.

Photo C. Handy 2-ounce spray cans of TDP chemicals also are available. This size fits nicely in a tool box, bicycle bag, or glove compartment. A plus for many applications, these sprays don't produce the usual fine mist, but rather a powerful stream of lubricant which gets where it's needed in a hurry.

FCC

Reprinted from the Federal Register.

PART 97—AMATEUR RADIO SERVICE

Increase in the Frequencies Available for Use by General Class Amateur Radio Operators

AGENCY: Federal Communications Commission.

ACTION: Final rules.

SUMMARY: The FCC is amending its amateur radio rules to permit Oeneral Class operators to operate their stations between 50.0 MHz and 50.1 MHz. We are taking this action in order to give General Class operators the same privileges as Technician Class operators in the very high and ultra high frequency bands.

EFFECTIVE DATE: May 15, 1978.

ADDRESS: Federal Communications Commission, 1919 M Street NW., Washington, D.C. 20554.

FOR FURTHER INFORMATION CONTACT:

Mr. Gregory M. Jones, Personal Radio Division, 202-634-6819 (Not a toll-free telephone number).

SUPPLEMENTARY INFORMATION:

ADOPTED: April 20, 1978.

RELEASED: May 3, 1978.

Order. In the matter of increase in the frequencies available for use by Oeneral Class amateur radio operators.

1. This Order makes all authorized amateur operating privileges available to General Class amateur radio operators between 50.0 MHz and 50.1 MHz.

2. On March 22, 1978 the Commission adopted a Second Report and Order in Docket 20282. The Second Report and Order (1) Made the Novice Class amateur operator license valid for a period of five years and renewable [1] and (2) extended full amateur operating privileges to Technician Class amateur operators above 50.0 MHz. The new rule amendments were given an effective date of May 15, 1978.

3. It has come to our attention that in making 50.0 MHz to 50.1 MHz available to Technician Class licensees, we may have acted unfairly towards General Class licensees, who are prohibited from operating their amateur stations between 50.0 MHz and 50.1 MHz.[2] Since the General Class license is more difficult to obtain than the Technician Class license, it does not appear reasonable to afford Technician Class licensees greater operating privileges than General Class licensees. Indeed, one of the principles upon which the current amateur licensing system is based is that each successively "higher" amateur operator license conveys all operating privileges of all "lower" class operator licenses. The Rules as amended by the Second Report and Order in Docket 20282, are anomalous: a licensee "upgrading" the class of his operator license from Technician to Oeneral would lose the privilege of operating between 50.0 MHz and 50.1 MHz.

4. We believe General Class licensees should have all privileges afforded Technician Class licensees. Accordingly, we are amending Section 97.7 of the rules to make 50.0 MHz to 50.1 MHz available to General Class licensees.

5. Authority for this action, which we believe to be in the public interest, is contained in sections 4(i) and 303 of the Communications Act of 1934, as amended. Because the amendment we are adopting is minor in character, merely increasing slightly the frequencies available for the use of General Class amateur radio operators, we find, for good cause, that the prior notice and public procedure provisions of the Administrative Procedures Act, 5 U.S.C. 553, are unnecessary.

8. For the foregoing reasons, the Commission orders amendment of Part 97 of its rules, as such attached below effective May 15, 1978.

(Secs. 4, 303, 48 Stat., as amended, 1066, 1082; (47 U.S.C. 154, 303).)

FEDERAL COMMUNICATIONS COMMISSION,
WILLIAM J. TRICARICO,
Secretary.

The FCC is amending Part 97 of Chapter 1 of Title 47 of the Code of Federal Regulations, as follows:

1. Section 97.7(a) is amended to read, as follows:

§ 97.7 Privileges of operator licenses.

(a) *Amateur Extra Class and Advanced Class.* All authorized amateur privileges including exclusive frequency operating authority in accordance with the following table:

Frequencies	Class of license authorized
3500-3525 kHz	Amateur extra only.
3775-3800 kHz	Do.
7000-7025	Do.
14,000-14,025 kHz	Do.
21,000-21,025 kHz	Do.
21,250-21,270 kHz	Do.
3800-3890 kHz	Do.
7150-7225 kHz	Amateur extra and advanced.
14,200-14,275 kHz	Do.
21,270-21,350 kHz	Do.

[1] The Novice Class operator license had been valid for a period of two years and was not renewable.

[2] Section 97.7(a) of the Commission's Rules limits operation between 50.0 MHz and 50.1 MHz to Amateur Extra Class and Advanced Class operators.

PART 97—AMATEUR RADIO SERVICE

Editorial Amendments Concerning Novice Class Amateur Radio Operators

AGENCY: Federal Communications Commission.

ACTION: Editorial rule amendments.

SUMMARY: The FCC is amending its amateur radio rules to bring them into conformity with action the FCC took in March 1978. In a report and order adopted in March 1978 the FCC made the novice class amateur radio operator license valid for a 5-year term and renewable. At that time only the rule about renewability was amended, however. This order amends the rule about the term of the novice class license.

EFFECTIVE DATE: May 15, 1978.

ADDRESS: Federal Communications Commission, 1919 M Street NW., Washington, D.C. 20554.

FOR FURTHER INFORMATION CONTACT:

Mr. Gregory M. Jones, Personal Radio Division, 202-634-6619.

SUPPLEMENTARY INFORMATION:

Adopted: April 11, 1978.

Released: April 12, 1978.

1. On March 22, 1978, the Commission adopted a second report and order in Docket 20282. In the second report and order the Commission, among other things, said it was amending its rules to make the novice class amateur operator license valid for a period of 5 years and renewable. The novice class operator license had previously been valid for a period of 2 years and was not renewable. The new rules were given an effective date of May 15, 1978.

2. The second report and order in Docket 20282 amended § 97.13 of the rules to state that all amateur operator licenses could be renewed upon proper application. Regulations concerning the license terms of amateur licenses are contained in § 97.59 of the rules, however. This order amends § 97.59 of the rules to implement the Commission's express intention in Docket 20282; namely, that all amateur licenses, including those issued to novice class operators, are normally to be valid for 5 years from the date of issuance or renewal.

3. Since the amendment we are adopting is editorial in character, merely amending the rules to ensure their conformity with prior Commission action, the prior notice and public procedure provisions of the Administrative Procedures Act, 5 U.S.C. 553, are not applicable. Authority for this action appears in sections 4(i), 5(d), and 303 of the Communications Act of 1934, as amended.

4. Accordingly, it is ordered that § 97.59 of the Commission's rules is amended as set forth below effective May 15, 1978.

(Secs. 4, 5, 303, 48 Stat., as amended, 1066, 1068, 1082; 47 U.S.C. 154, 155, 303.)

FEDERAL COMMUNICATIONS COMMISSION,
RICHARD D. LICHTWARDT,
Executive Director.

Part 97 of chapter I of Title 47 of the Code of Federal Regulations is amended, as follows:

1. § 97.59 (a) and (b) are amended to read, as follows:

§ 97.59 License term.

(a) Amateur operator licenses are normally valid for a period of 5 years from the date of issuance of a new or renewed license.

(b) Amateur station licenses are normally valid for a period of 5 years from the date of issuance of a new or renewed license. All amateur station licenses, regardless of when issued, will expire on the same date as the licensee's amateur operator license.

PART 97—AMATEUR RADIO SERVICE

Operator Classes, Privileges, and Requirements in the Amateur Radio Sarvica

AGENCY: Federal Communications Commission.

ACTION: Final rules.

SUMMARY: The FCC is amending its Amateur Radio Service rules to make all amateur frequencies above 50 MHz available to Technician Class amateur operators and to make the Novice Class amateur operator license renewable and valid for five years. We are taking this action to give Technician Class operators more flexibility in their operations and to make it easier for Novice Class operators to remain licensed amateur operators. We expect our action will result in both more efficient use of the spectrum above 50 MHz by amateur operators and an increase in the number of Novice Class amateur operators.

EFFECTIVE DATE: May 15, 1978.

ADDRESSES: Federal Communications Commission, Washington, D.C. 20554.

FOR FURTHER INFORMATION CONTACT:

Joseph M. Johnson, Personal Radio Division, Safety and Special Radio Services Bureau, 202-832-7250 (This is not a toll-free telephone number.)

SUPPLEMENTARY INFORMATION:

Adopted: March 22, 1978.

Released: April 6, 1978.

By the Commission: Commissioner White dissenting.

In the matter of amendment of Part 97 of the Commission's Rules concerning operator classes, privileges, and requirements in the Amateur Radio Service (41 FR 25013).

Docket No. 20282; RM-1016, 1363, 1454, 1456, 1516, 1521, 1526, 1535, 1568, 1572, 1602, 1615, 1629, 1633, 1656, 1724, 1793, 1805, 1841, 1920, 1947, 1976, 1991, 2030, 2043, 2053, 2149, 2150, 2162, 2168, 2216, 2219, 2256, 2284, 2449; FC 78-212.

1. On December 16, 1974, the Commission released a Notice of Proposed Rulemaking in this proceeding which was published in the FEDERAL REGISTER on December 20, 1974 (39 FR 44042). A First Report and Order was released on June 15, 1976 (41 FR 25013). This Second Report and Order is a further step in the resolution of the very complex and far reaching proposals of the Notice.

2. In the Notice, the Commission proposed to expand the frequencies available to Technician Class licensees. Presently, Technicians may operate in the bands 50.1-54.0 MHz, 145-148 MHz, and on all amateur frequencies above 220 MHz. The proposed rules would have permitted operation on all amateur frequencies above 50 MHz. This proposal was supported by the American Radio Relay League (ARRL) in its comments, and by numerous individual amateurs.

3. In light of actions now being taken in Docket 21033 concerning frequencies available for repeater station use, we believe the time has come to grant expanded frequency privileges to Technicians. Specifically, we will amend Section 97.7(d) of the Amateur Radio Service Rules to permit Technician Class licensees to operate on all frequencies above 50 MHz. We believe this action will give greater flexibility to such licensees who wish to do experimental and weak-signal work in the 50 MHz and 144 MHz bands.

4. In Docket 20282 the Commission also proposed to make the Novice Class operator license, which is currently a two year non-renewable license, a five year renewable license. There was strong support for this proposal in the comments, and we are adopting it as proposed. We are amending Section 97.13 of the Rules accordingly. Licensees now holding Novice Class licenses may renew them upon proper application.

5. In view of the foregoing, we believe that the amended rules, as discussed above, are in the public interest. Accordingly, pursuant to authority contained in Sections 4(i) and 303 of the Communications Act of 1934, as amended, it is ordered that Part 97 of the Commission's Rules is amended as set forth in the attached Appendix. It is further ordered that this proceeding is continued. The rule amendments adopted herein become effective May 15, 1978.

(Secs. 4, 303, 48 Stat., as amended, 1066, 1082; 47 U.S.C. 154, 303.)

FEDERAL COMMUNICATIONS COMMISSION,
WILLIAM J. TRICARICO,
Secretary.

Part 97 of Chapter 1 of Title 47 of the Code of Federal Regulations is amended, as follows:

1. § 97.7(d) is amended to read, as follows:

§ 97.7 Privileges of operator licenses.

* * * * *

(d) *Technician Class.* All authorized amateur privileges on the frequencies 50.0 MHz and above. Technician Class licenses also convey the full privileges of Novice Class licenses.

* * * * *

2. In § 97.13, paragraph (b) is deleted, paragraphs (c) through (f) are redesignated paragraphs (b) through (e), and paragraph (a) is amended, as follows:

§ 97.13 Renewal or modification of operator license.

(a) An amateur radio operator license may be renewed upon proper application.

PART 97—AMATEUR RADIO SERVICE

Simplification of the Licensing and Call Sign Assignment Systems in tha Amateur Radio Service

AGENCY: Federal Communications Commission.

ACTION: Final rules.

SUMMARY: The FCC is eliminating the availability of special call signs prefixed by the letters "WR" for stations in repeater operation in the Amateur Radio Service. We think each amateur radio operator should have one station license and one call sign.

"WR" call signs are unnecessary. We expect the elimination of "WR" call signs for stations in repeater operation will have no significant effect on operations conducted in the Amateur Radio Service.

EFFECTIVE DATE: Non-Applicable.

ADDRESSES: Federal Communications Commission, Washington, D.C. 20554.

FOR FURTHER INFORMATION CONTACT:

Gregory M. Jones, Personal Radio Division, Safety and Special Radio Services Bureau, 202-634-6619. (This is not a toll-free telephone number.)

SUPPLEMENTARY INFORMATION:

Adopted: March 22, 1978.

Released: April 6, 1978.

By the Commission: Commissioner White dissenting.

In the matter of the simplification of the licensing and call sign assignment systems in the Amateur Radio Service (43 FR 7332).

What Is the Background of This Proceeding?

1. In a Notice of Proposed Rulemaking in Docket 21135, released March 11, 1977, 42 FR 15438 (1977), the Commission acted on its own initiative and proposed several major revisions of its Amateur Radio Service regulations, 47 CFR § 97.1, et seq. Comments on our proposals were due no later than June 2, 1977. Reply comments were due no later than June 30, 1977. The American Radio Relay League, Incorporated (ARRL) petitioned for an additional thirty days in which to submit comments and reply comments. On May 19, 1977 the Chief, Safety and Special Radio Services Bureau, acting under delegated authority, denied the ARRL's petition, stating that the eighty-three day comment period the Commission provided was adequate, and that rapid resolution of the issues raised in the Notice of Proposed Rulemaking in Docket 21135 was essential.

2. In the Notice of Proposed Rulemaking in Docket 21135 we proposed to simplify greatly the licensing and call sign assignment systems in the Amateur Radio Service. We proposed to discontinue the issuance of all amateur station licenses, except primary station licenses and space station licenses. Specifically, we proposed to eliminate Radio Amateur Civil Emergency Service (RACES) stations, special event stations, club stations, military recreation stations, secondary stations, repeater stations, auxiliary link stations and control stations. We also proposed to amend the Amateur Service rules to state that all amateur station call signs would be assigned on a systematic basis. As part of our call sign proposal, we proposed to eliminate the availability of distinctive call signs for repeater stations (call signs prefixed by the letters "WR") and RACES stations (call signs prefixed by the letters "WC").

3. The Commission adopted a First Report and Order in Docket 21135 on February 8, 1978. In the First Report and Order the Commission eliminated the availability of secondary stations and special event stations. We also amended the amateur rules to eliminate existing special call sign programs. We did not adopt our proposal to eliminate separate club, military recreation and RACES station licenses. Instead, we proposed to adopt new rules restricting the eligibility for such licenses. We did not act at all on our proposals to eliminate repeater, auxiliary link and control stations licenses or to eliminate the availability of distinctive call signs for repeater stations.

4. Our proposals to eliminate separate repeater, auxiliary link and control station licenses duplicated a proposal we made in a Notice of Inquiry and Notice of Proposed Rulemaking in Docket 21033, 42 FR 2089 (1977). In a Report and Order in Docket 21033, released September 27, 1977, FCC 77-651, the Commission amended its rules to eliminate the availability of repeater, auxiliary link and control station licenses. On November 4, 1977 these regulations were stayed pending disposition of several petitions requesting reconsideration of our action in Docket 21033. In a Memorandum Opinion and Order in Docket 21033, also adopted today, we are affirming our original decision to delete the availability of repeater, auxiliary link and control station licenses. Further discussion of these issues in connection with this proceeding is therefore not necessary. Rather, we will consider the one remaining unaddressed issue in Docket 21135, namely, "WR" call signs for stations in repeater operation.

What Were Our Specific Proposals and Why Did We Make Them?

5. In our Notice of Proposed Rulemaking in Docket 21135 we proposed to eliminate the availability of station call signs prefixed by the letters "WR" for stations in repeater operation. We made this proposal, which involves a change in Commission policy rather than an amendment to a specific rule, to bring our regulatory programs into closer alignment with our existing resources. We said we could discern no compelling reason to continue our complex system of call sign assignment in the Amateur Service, a system which requires an allocation of our limited resources sufficient to degrade significantly the services we offer to amateur licensees in other areas. We indicated that we were aware that our proposal in Docket 21135 to eliminate the availability of "WR" call signs entirely conflicted with a proposal we made in Docket 21033 to make "WR" call signs available in certain instances to stations in repeater operation.[1] We concluded that our proposal to eliminate "WR" call signs, when taken with our other call sign proposals, would, if adopted, "result in a simpler and fairer call sign assignment system and would permit us to concentrate our * * * resources on areas more productive for the Amateur Radio Service."

What Did the Comments Say?

6. The majority of those commenting on our proposed simplification of the amateur station call sign system did not address the question of the elimination of "WR" call signs for stations in repeater operation. Rather, most respondents focused their comments on other aspects of the call sign proposals, such as the proposals to eliminate the provisions of the rules which permitted former holders of specific call signs to reacquire those call signs and which permitted licensees holding so-called "preferred" call signs (i.e., call signs consisting of one or two letters, followed by one digit, followed by two letters, or call signs consisting of one letter, followed by one digit, followed by three letters) to retain preferred call signs when changing their station locations from one call sign region to another call sign region.

7. The comments about the proposed elimination of "WR" call signs were, for the most part, negative. Although we cannot discuss each comment individually, because of the number we received, the following were representative of the arguments advanced against the elimination of "WR" call signs:

a. Programming of automatic identification equipment to transmit the call sign of a station in repeater operation would be difficult, particularly if the call signs of more than one amateur stations are to be used for identifying the station placed in repeater operation.

b. No one would be willing to "lend" his primary station call sign to a station in repeater operation, since to do so would make the person "lending" his call sign responsible for the transmissions of all users of the station in repeater operation, including those transmissions which violate the Commission's rules.

c. Many amateur licensees travel extensively around the United States. In order to make effective use of existing repeater stations, amateur licensees who travel must use published directories listing repeater stations in operation. Elimination of "WR" call signs would diminish the utility of such directories and make operation away from home more difficult for amateur licensees.

d. The call signs of existing repeater stations are well known. To eliminate distinctive call signs for repeater stations would unnecessarily complicate repeater operation.

e. It is important in situations involving interference to or from a station in repeater operation that the station in repeater operation be readily identifiable. To eliminate "WR" call signs should make identification and location of stations in repeater operation more difficult than it is today.

What Action Are We Taking and Why?

8. We have carefully reviewed all the comments we received addressing the issue of "WR" call signs for stations in repeater operation, and have concluded that the arguments against elimination of "WR" call signs, although far from frivolous, are outweighed by other, more compelling considerations, namely, the extension of the principle adopted in the First Report and Order that each amateur operator should have *one* station license and *one* station call sign. Accordingly, we will no longer issue "WR" call signs to stations in repeater operations.[2] Licensees of stations with "WR" call signs will not be permitted to retain those call signs after the expiration of their station licenses.

9. In eliminating the availability of "WR" call signs for stations in repeater operation, we emphasize our firm belief that our action will not adversely affect operations conducted in the Amateur Service. The elimination of "WR" call signs, taken in connection with our simultaneous elimination of separate licenses for repeater stations in Docket 21033, means that any station may be placed in repeater operation, using its existing call sign, without prior Commission authorization. Amateur stations were operated as repeater stations for many years before the Commission adopted regulations governing the licensing and operation of repeater and associated stations in Docket 18803, 37 FCC 2d 225 (1972). Thus, until little more than five years ago, the Commission had issued no "WR" call signs whatsoever. Moreover, the Commission's decision in 1972 to require separate licenses and call signs for stations in repeater operation was not particularly well received by the amateur community at that time. We found it odd, to say the least, that there is now so much opposition to action which just five years ago would have been overwhelmingly approved by amateur licensees. In sum, what we are doing in this proceeding and in Docket 21033 is to relieve unnecessary restrictions on amateur licensees, to make it easier for amateurs to place stations in repeater operation, and to relieve the Commission of an administrative burden which has proven to be unnecessary.[3]

10. We do not think the arguments against eliminating the availability of "WR" call signs are persuasive.

a. Programming of automatic identification equipment to transmit primary, secondary or club station call signs, instead of "WR" call signs, should not present licensees with a significant problem. Indeed, after the Commission adopted new repeater operations regulations on September 1977, but before those regulations were stayed in November 1977, many amateurs prepared to place new stations in repeater operation. We are not aware of such substantial difficulty encountered by the licensees of such stations in programming their automatic identifiers to transmit non-"WR" call signs, although it has been brought to our attention that some automatic programming equipment cannot retain all the characters (e.g., WB6XXX/RPT) our rules require to be transmitted as station identifying by stations in repeater operation.[4]

b. We believe the contention that no one would be willing to permit his primary station call sign to be used by a station in repeater operation has no merit. It is true that the licensee of such a station would be responsible for all transmissions of the station, including those in violation of our rules; however, the licensee is always responsible for the proper operation of his station, whether or not it has a "WR" call sign. If an existing repeater station is affiliated with a club, the station trustee is legally responsible for the station's transmissions. If a repeater station is licensed to an individual amateur, he is as responsible for the proper operation of the repeater station as he is for the proper operation of his primary station. In this regard, whether a station is assigned a "WR" call sign or not makes no legal difference whatsoever. The licensee is *always* responsible for the proper operation of his station.

c. We are aware that many amateurs travelling around the United States make use of open-access repeater stations when they are away from home. We are also aware that amateurs who are away from home rely frequently on published repeater directories to determine the frequencies and call signs of repeater stations in various parts of the country. We do not believe, however, that elimination of the availability of "WR" call signs will significantly affect the utility or reliability of repeater directories. Nor do we believe that elimination of "WR" call signs will make it more difficult for amateurs travelling away from home to make use of stations in repeater operation. We presume that the frequencies used by new stations placed in repeater operation, without "WR" call signs, will be coordinated as they have been in the past, with amateur repeater councils. We further presume that most new stations placed in repeater operation will, upon successful frequency coordination, be listed in the various published repeater directories, in the same way a station with a "WR" call sign is listed. The absence of a "WR" call sign simply makes no difference from an operational standpoint.

d. It may be true that the call signs of some existing repeater stations are well known. We do not believe, however, that elimination of "WR" call signs for stations in repeater operation would cause much, if any, confusion. Firstly, most amateur operators are accustomed to dealing with many different call signs in their everyday operations. Amateur operators will, we believe, experience no difficulty adapting to new call signs for stations in repeater operation. Secondly, and more importantly, it has been our experience that many amateurs are, for the most part, unaware of repeater station call signs, or, if they are aware, tend to downplay their significance. That is, most amateurs place much greater importance on the frequencies on which a repeater station operates than on the call sign of a repeater station. For example, most amateur operators would refer to WR3XXX, operating on 146.31 MHz/146.91 MHz, not as WR3XXX, but as the "31/91 machine." Our respondents in this proceeding therefore appear to have greatly overemphasized the importance of "WR" call signs for stations in repeater operation.

e. We agree that it is very important in cases in which a station in repeater operation causes radio frequency interference that it be easy to identify and locate the station in repeater operation. We do not believe, however, that a "WR" call sign makes any perceptible difference one way or the other in the resolution of interference complaints. If a station is in repeater operation with a non-"WR" call sign and is causing interference, it should be no more difficult to contact the licensee than if a station with a "WR" call sign were causing the interference.

---

[1] In both our Notice of Proposed Rulemaking and Report and Order in Docket 21033 we recognized the desirability, both from the user's standpoint and the enforcement standpoint, of providing a mechanism by which one monitoring a frequency knows whether or not he is listening to a station in repeater operation. We adopted a rule requiring a station in repeater operation to transmit either the letters "RPT" or the word "repeater" after the station call sign when identifying.

[2] The processing of repeater station licenses has been "frozen" since September 21, 1977. The last "WR" call sign has, therefore, already been issued.

[3] In this connection, we refer the reader to paragraphs 7-9 of our First Report and Order in this proceeding, in which we indicate that elimination of all special call sign programs will have a substantial beneficial effect on the efficiency of our amateur processing system.

[4] In Docket 21033 we are amending our identification rule to permit licensees employing telegraphy for identification to append *either* "R" *or* "RPT" to their station call signs.

The mailing address of the licensee and the station's location are contained in Commission records both for stations with "WR" call signs and stations without "WR" call signs. Resolution of interference complaints would, therefore, not be made any more difficult by permitting stations in repeater operation to use non-"WR" call signs.

CONCLUSION

11. In conclusion, we have shown that the issuance of "WR" call signs constitutes an unnecessary drain on our limited resources, that elimination of "WR" call signs will have no significant effect on amateur repeater operations, and that the arguments of those objecting to the elimination of "WR" call signs are without merit. Accordingly, we order that no new "WR" are to be issued. Licensees now assigned "WR" call signs may continue to use those call signs until the expiration dates of their station licenses. (We note that stations assigned "WR" call signs are exempt from the station identification requirements of Section 97.84(d)(1) of the Rules.)

12. We are continuing Docket 21135.

FEDERAL COMMUNICATIONS COMMISSION,
WILLIAM J. TRICARICO,
Secretary.

PART 97—AMATEUR RADIO SERVICE

Deregulation of Rules To Simplify the Licensing and Operation of Complex Systems of Stations and Modify Repeater Subbands in the Amateur Radio Service

AGENCY: Federal Communications Commission.

ACTION: Final rules.

SUMMARY: The FCC is amending its Amateur Radio Service rules to eliminate the availability of repeater, auxiliary link, and control station licenses. We are also making several other changes in the rules governing the operation of repeater and associated stations. We are taking this action in response to several petitions requesting that we reconsider action we had originally taken in September 1977. We expect our action will make it much easier for amateur operators wishing to place their stations in repeater operation to do so.

EFFECTIVE DATE: May 15, 1978.

ADDRESS: Federal Communications Commission, Washington, D.C. 20554.

FOR FURTHER INFORMATION CONTACT:

Robert Cassler, Personal Radio Division, Safety and Special Radio Services Bureau, 202-634-6620. (This is not a toll-free number.)

SUPPLEMENTARY INFORMATION:

Adopted: March 22, 1978.

Released: April 6, 1978.

By the Commission: Commissioner White dissenting.

In the matter of deregulation of part 97 of the Commission's rules to simplify the licensing and operation of complex systems of stations and modify repeater subbands in the Amateur Radio Service.

1. The Commission has before it eight petitions for reconsideration of the action it took in Docket 21033 on September 21, 1977. These petitions were filed by the American Radio Relay League, Newington, Conn.; Robert Bingham, Elgin, Ill.; Laurent J. Blouin, Derry, N.H.; The Chicago FM Club, Arlington Heights, Ill.; Corwin D. Moore, Jr., on behalf of the Michigan Area Repeater Council, Ann Arbor, Mich.; Jospeh H. Reisert, Jr., of Chelmsford, Mass.; The San Antonio Repeater Organization (SARO), San Antonio, Tex.; and Paul Wade, Somerville, N.J., all according to section 1.429 of the Commission's rules.

BACKGROUND

2. The Commission proposed in a notice of inquiry and notice of proposed rulemaking in Docket 21033, released January 6, 1977 (42 FR 2089), to substantially change many of the rules governing the licensing and operation of repeater stations and associated stations in the Amateur Radio Service. We proposed at that time to end the separate licensing of repeater, auxiliary link, and control stations, to open up nearly all amateur bands for repeater operations and to reduce the station identification and logging requirements for repeater operation. These proposals were in furtherance of the Commission's policy of deregulation of the Amateur Radio Service, and simplification of licensing of Amateur radio stations. The Commission also cited progress amateurs had made toward self-regulation in the operation and development of complex systems of stations.

3. Final regulations in Docket 21033 were adopted by the Commission, and released September 27, 1977 (42 FR 52418). In this action, the Commission changed the amateur rules to allow amateurs to operate repeaters without requiring a separate license. It opened all frequencies above 220 MHz to repeater operation (except for 435-438 MHz) and added 144.5 to 145.5 MHz as a repeater subband in the 144-148 MHz amateur band. The Commission increased Technician Class operating privileges to include this new repeater subband. Logging and station identification requirements were relaxed. The Commission said that elimination of separate repeater, auxiliary link and control stations will enable it to provide the public with better service in processing primary station and operator license applications.

4. The Commission received eight petitions to reconsider the rule changes adopted in Docket 21033. The rule changes were to have taken effect on November 4, 1977. However, the American Radio Relay League filed a petition for stay of the effective date of the rule changes, citing the possibility of irreparable harm if the rules were to take effect before the Commission had an opportunity to consider the eight petitions for reconsideration. Therefore, by action of the Commission the effective date of the regulations adopted in the report and order in Docket 21033 was stayed until further order of the Commission.

5. The American Radio Relay League subsequently filed a petition to modify the stay order on November 23, 1977. In the petition it states that it had become clear that the content of the petitions for reconsideration indicated only three areas of controversy, and that the public interest would be served by modifying the stay order so that the noncontroversial changes in the rules can become effective at an early date. On February 9, 1978, the Chief, Safety and Special Radio Services Bureau, acting under delegated authority, waived sections, 97.40, 97.43, 97.88, and 97.126 of the Commission's rules to permit licensed amateurs to operate repeater, auxiliary link, control or remotely controlled stations without prior Commission approval.

THE PETITIONS

6. There were three areas of controversy raised by the petitions for reconsideration: The licensing of repeater stations and "WR" call signs; the expansion of the repeater subbands; and the effect of the rule changes on the operating privileges of the Technician Class license holder.

7. *Repeater licensing.* Five petitioners urged the Commission to reconsider its decision which ended separate licensing for repeater, auxiliary link, and control stations and discontinued the issuance of "WR" call signs for repeater stations. The American Radio Relay League argues that repeater stations, by their nature, must operate on fixed frequencies, and that these fixed frequencies must be coordinated. Voluntary frequency coordination has been extremely effective under the present system where an amateur must get a separate repeater license and call sign. The ARRL feels that by removing the requirement of a repeater license it will "substantially decrease the possibility that voluntary cooperation and coordination by amateurs will continue to be effective and practical." The Michigan Area Repeater Council agrees with the ARRL that coordination is important and asserts that the Commission's contention in its report and order in Docket 21033 that "fly-by-night" operations will not occur because of the expense and planning involved in setting up a repeater station is "unfortunate and mistaken." "Very inexpensive repeaters could be built out of junk-box parts * * * a transmitter and receiver strip * * * and a moderate dose of that infamous Amateur home-brew ingenuity." The Michigan Area Repeater Council is concerned that without the identifying factor of a license or a "WR" call sign, the amateur community's capability of self-enforcement will be impaired.

8. Similar fears of disorderly use of the frequencies by amateurs are expressed by petitioners Laurent Blouin, Robert Bingham, and Joseph Reisart, Jr. All three point to the increased risk of interference from unlicensed repeater operation.

9. The ARRL also asserts that ending "WR" call signs for currently licensed repeater stations was not within the scope of our original proposal. It cites the notice of proposed rulemaking in which we said, "We propose to discontinue our policy of assigning call signs prefixed with the letters "WR". Stations presently assigned such call signs would be permitted to retain them indefinitely. A licensee wishing to engage in repeater operation and wishing to obtain a "WR" call sign would be required to request the prefix." In the final draft of the rules, the Commission stated that those holding "WR" call signs would not be able to renew them, nor could anyone get one on request. The ARRL petition states that this action was contrary to the Administrative Procedure Act by failing to give notice to the public that "WR" call signs would be discontinued entirely.

10. *Repeater subbands.* Five petitioners requested reconsideration of the Commission's expansion of the repeater subbands. The major thrust of the arguments was that allowing repeater operation on all amateur frequencies above 220 MHz would significantly interfere with a number of amateur activities in the VHF and UHF bands. According to petitioner Joseph Reisert, Jr., the amateur frequencies 144 through 450 MHz are all used for weak signal reception, experimental communications systems, EME (Earth Moon Earth, or moon bounce) communications, tropospheric propagation and state-of-the-art equipment design. All these activities, he says are examples of amateurs contributing "to the advancement of the radio art," one of the bases and purposes of amateur radio as stated in section 97.1(b). Petitioner Paul Wade adds that "the weak-signal communications are obviously subject to interference by strong signals; the capability of a well-located repeater to unwittingly disturb weak-signal communications at distances far removed from its normal service area illustrates the incompatibility of the two modes." Laurent Blouin states that it is impossible to do "any serious work on weak signal detection if high power FM operations were within 1 MHz of the serious operator."

11. The ARRL, Laurent Blouin, Joseph Reisert, Jr., and Paul Wade mentioned specific subbands they would like to see protected. All four argued that 220.0 to 220.5 MHz, and 431-433 MHz should be set aside (432 MHz is the frequency currently being used for satellite and moon bounce communications), and protected from repeater operation. The ARRL, Joseph Reisert, Jr., and Laurent Blouin also want protection for 222.0 to 222.5 MHz. Paul Wade and the ARRL want 1290 to 1300 MHz protected for future amateur satellite use.[1]

12. The ARRL further argues that when the Commission added 144.5 to 145.5 as a repeater subband, it had done so without adequate notice to the public. The ARRL states that because the notice of proposed rulemaking invited comments only on the proposal to make all frequencies allocated to the Amateur Radio Service except 435 to 438 MHz available for repeater and auxiliary operation, alternatives, such as additional subbands, could not be considered.

13. *Technician class privileges.* Four petitioners are concerned with how the expansion of the repeater subbands to include 144.5 to 145.5 MHz will affect Technician Class operators. Traditionally, 145 MHz has been used by Technician Class operators for single sideband (SSB) and telegraphy operation. Joseph Reisert, Jr. states that the report and order in Docket 21033 "actually takes away rather than gives the technicians any extra privileges since the present c.w. area of 145 to 145.3 MHz will now be open to repeaters and FM." The Chicago FM Club states that "repeater councils across the country are working on a band plan that would provide 'protected' space on a voluntary basis from 144.9-145.1 MHz for SSB/CW operation. But the voluntary plan has some limitations." They go on to state that the only effective solution would be to allow Technician Class operators to operate from 144.2-148.0 MHz.

14. The San Antonio Repeater Organization (SARO) argues that FM repeater use of 144.5 to 145.5 MHz "displaces established SSB use by Technicians without providing new spectrum where they may relocate along with higher class licensees." SARO would extend radiotelephone privileges for Technician Class operators downward to 144.1 MHz. Laurent Blouin argues that if Technician Class operators must share 144.5 to 145.5 MHz with FM repeater operation, there would be no incentive for the holder of the Technician Class license to upgrade. He would allow Technician Class operators telegraphy privileges from 144.0-148.0 MHz and radio telephony privileges from 144.2 to 148.0 MHz.

15. *Comments.* There were 18 comments filed in response to the 8 petitions for reconsideration. Three of the comments opposed the petitions. Fifteen of the comments supported the petitions on at least one of the three issues they raised. The breakdown of support was as follows: Eight commenters were for protection of weak-signal activities, nine commenters wanted to retain separate licensing for repeater stations and "WR" call signs, seven commenters were for added operating privileges for Technician Class license holders. The total adds to more than 15 because many commenters commented on more than one issue.

DISCUSSION

16. *Repeater licensing.* The requirement that amateurs who want to operate a repeater station first obtain a separate repeater license from the Commission was imposed originally in 1972 in Docket 18803. 37 FCC 2d 225 (1972). Before 1972, repeaters were not specifically mentioned in the amateur rules. Amateurs who operated repeaters before 1972 did so under the general guidance of the rules which applied to amateur operation and without a separate repeater license. The Commission, in Docket 18803, sought to emphasize that repeater operation required special rules. To ensure that these new rules were adhered to, the Commission required a separate license based on a substantial showing by the amateur applicant. The information required by the Commission from an applicant included a system network diagram, antenna radiation patterns, certain calculations for effective radiated power and height above average terrain, and technical data relating to remotely controlled stations, control stations, and auxiliary link stations. The requirements for these showings were intended "to verify that the applicant has given careful consideration to the planning and design of his repeater station, addressing particular attention to the geographical area to be covered." 37 FCC 2d 225, 228 (1972).

17. In a long line of rulemaking proceedings beginning in 1974, the extensive showings required by the Commission and several of the more restrictive rules governing repeater operation were gradually dropped. For example, in an Order adopted January 10, 1974, we deleted the requirement that the applicant supply the Commission with his calculations of the effective radiated power and antenna height above average terrain of his proposed station. In Docket 20073, adopted May 28, 1975, the Commission permitted the linking of amateur repeater stations. In Docket 20112, adopted June 11, 1975, the Commission authorized the automatic control of repeater stations under certain conditions. In Docket 20113, adopted October 29, 1975, the Commission permitted crossband oper-

[1] Neither 432 MHz nor 1290 MHz-1300 MHz is available to the Amateur satellite Service.

ation of repeater stations. In addition, by Order of the Commission on November 17, 1975, we removed the requirement that the repeater applicant file certain technical data relating to remotely controlled stations, control stations, and auxiliary link stations, and we allowed portable/mobile operation of remotely controlled stations.

18. This policy of deregulation has brought us to the point where, at present, an applicant for a repeater station need show no more than he is an amateur, and holds at least a Technician Class license. This tremendous shift in regulatory policy has been based on conditions in amateur radio as the Commission has perceived them. Before 1972, the privilege of operating through a repeater was abused by some amateurs, partially out of an unfamiliarity with what new ground rules should apply to this type of operation. Gradually, as conditions stabilized, and as the amateurs learned more about self-regulation and local frequency selection, the Commission deregulated by relieving rule restrictions, and simplifying application procedures. The cooperation amateurs have shown in the use of the amateur frequencies was recognized by the ARRL in comments it filed to the Notice of Proposed Rule Making in this proceeding. In respose to our proposal to establish principles of priority of use of amateur frequencies, it argued that the number of troublesome situations in amateur radio were infinitesimal. The ARRL went on to say that all but a few of the "disagreements over repeater frequencies have been effectively resolved by voluntary frequency coordination." Comments, ARRL at 30.

19. In Docket 21033 we proposed to take the next logical step and end the requirement for a separate license for repeaters. This was done in recognition that the original function of repeater licensing, namely, the stabilization of a new situation, had been served. However, the petitioners in this docket argue that a repeater license is still necessary and still serves a function. The expressed fear is that the situation will become chaotic if any amateur, Technician Class or above, can set up a repeater. However, the state of affairs at present is that any amateur, Technician Class or above, can set up a repeater simply by checking off the appropriate box on the Form 610 and waiting for a repeater license. There is simply no longer any practical purpose served by the licensing process. We should also note that some amateurs have also expressed the fear that, without separate repeater licenses, amateurs who operate their primary stations as repeaters might place their primary station licenses in jeopardy for rule violations committed by users of the repeater. In this regard, the Commission intends to treat the repeater users as being primarily liable for operational rule violations, and will look to the repeater licensee only to the extent that he fails to meet his obligation to provide adequate control of his repeater. As a practical matter, our enforcement efforts in the past have proceeded on this basis. In many instances, we have worked with repeater licensees in tracking down users who commit rule violations through repeaters.

20. To do away with repeater licensing is to do more than relieve the amateur of an exercise he has shown he can do without. It also means the Commission will be able to allocate its resources more efficiently and process other applications in a timely manner. When the Commission announced its freeze on new repeater applications in September, 1977, the Commission had over 3,000 unprocessed repeater license applications on hand. Each application would have required special processing apart from the normal handling given an amateur application, and represented a sizable diversion of Commission manpower from the processing of primary station and operator licenses. Yet, even when the repeater application is finally processed, a large number of these new repeater licenses go unused. We estimate that some 1,500 of the repeater licenses granted by the Commission in the past 5 years were for stations that were never built. Clearly, this amounts to a waste of valuable manpower which could be used much more profitably in other areas.

21. However, the ARRL and others argue that regardless of whether licensing serves a practical function, it does serve a psychological function in that it makes the amateur aware that he is responsible for the proper operation of his repeater. We believe, though, that an amateur is psychologically aware of his responsibilities when he becomes an amateur, and it is not necessary for the Commission to remind the amateur of his responsibilities each time he enters a new field of operation. Would this type of psychological reminder be necessary for sending radio teleprinter signals? slow-scan television signals? or communicating through the amateur satellites?

22. We are therefore affirming the decision made by the Commission in the First Report and Order in Docket 21033 to end the requirement of a separate license for repeater, auxiliary link and control stations.

23. *"WR" call signs.* We agree with the ARRL's contention that adequate notice was not given in the Notice of Proposed Rule Making in Docket 21033 that "WR" call signs for repeaters stations might be discontinued. That proposal was made in Docket 21135, not Docket 21033. The Commission today is adopting a Second Report and Order in Docket 21135 specifically on the issue of "WR" call signs, which deletes the availability of "WR" call signs for repeater operation. For a discussion of that issue, the reader is referred to the Second Report and Order in Docket 21135. The station identification rules adopted in the First Report and Order in Docket 21033 in lieu of "WR" call signs have been modified in response to the petition filed by the Chicago FM Club. The rules, as orginally adopted, required that a station, when identifying by telegraphy, transmit the amateur's call sign followed by "RPT" if in repeater operation, or "AUX" if in auxiliary operation. The Chicago FM Club argues that this method of station identification "constitutes an excessive number of characters" and that the "majority of repeater identification devices lack the capacity to add the characters "RPT" without extensive rebuilding." We agree with the Chicago FM Club. The new rules will give amateurs a choice. They may add either the suffix "R" or the suffix "RPT" when identifying a repeater operation by telegraphy. Similarly, amateurs will be given the choice of "A" or "AUX" when identifying an auxiliary operation.

24. In addition, in response to requests from two petitioners, the Chicago FM Club and the Michigan Area Repeater Council, we are making clear exactly when the repeater identifier is to be used. If an amateur is operating a repeater under the remaining term of his repeater license, he may identify his station either under his "WR" call sign, or he may identify under his primary station call sign followed by the repeater identifier ("R" or "RPT", if telegraphy, "repeater", if telephony). There is no requirement to add the repeater identifier to a "WR" call sign. Of course, amateurs operating new repeaters must use the new repeater identification, because "WR" call signs are no longer available.

25. *Repeater subbands.* Before the question of repeater subbands can be resolved, there is the issue of notice raised by the ARRL: did the Commission give adequate notice to the public that new repeater subbands might be created when it proposed to make all amateur frequencies available to repeater operation? The Administrative Procedure Act requires that the notice of the proposed rule include, "either the terms or substance of the proposed rule, or a description of the subject and issued involved." 5 U.S.C. 553(b)(3). In the Notice of Proposed Rulemaking in this proceeding, the Commission proposed to make all amateur frequency bands, except 435-438 MHz, available for repeater operation. The comments which the Commission received indicated that problems existed with the proposed rule because it would create the danger of incompatibility with other amateur activities. Accordingly, the Commission, in its First Report and Order in Docket 21033, adopted a partial expansion of the repeater subbands, limiting it to amateur frequencies above 220 MHz and adding a one megahertz repeater subband in the two meter band, 144.5-145.5 MHz.

26. The ARRL argues that the creation of a one megahertz repeater subband at 144.5-145.5 MHz was not proposed originally. It contends that rules setting aside repeater subbands can not be adopted when the public is only given notice that the Commission is considering making all amateur frequencies available to repeaters. Yet, it is well established that "a notice of rulemaking is sufficient if it provides a description of the subjects and issues involved." *California Citizens Band Ass'n* v. *United States*, 375 F. 2d 43, 49, certiorari denied, 369 U.S. 844 (1967). See also, *Mt. Mansfield Television, Inc.* v. *FCC*, 442 F. 2d 470 (1971), and *Buckeye Cablevision, Inc.* v. *FCC*, 128 U.S. App. D.C. 262, 387 F. 2d 220 (1967). Further, the Administrative Procedure Act "does not require an agency to publish in advance every precise proposal which it may ultimately adopt as a rule." *California Citizens Band Ass'n*, supra, at 48. The position taken by the ARRL denies the purpose of a rulemaking proceeding—to allow an agency the flexibility it needs to shape the final rule on the basis of the comments it receives. The Administrative Procedure Act does not require an agency to either adopt or reject a proposal in total. This would be too rigid a restriction on the capability of an agency to act. The public comments indicated that in the two meter band, 144.0-144.5 MHz and 145.5-146.0 MHz were not appropriate for repeater activity, and therefore we declined to make those frequency ranges available to repeater operation. It seems clear that the public was on notice as to our proposed actions, and wanted us to consider alternative solutions, short of a total expansion of the repeater bands. We therefore find that proper notice was given the public on the issue of repeater subbands.

27. We turn now to the arguments of the petitioners on repeater subbands. In our First Report and Order in Docket 21033, we stated that we believed that weak signal work and other amateur activities should be afforded protection from repeater transmissions, and accordingly set out the 144.0-144.5 and 145.5-146.0 MHz ranges as ranges which would not be available to repeater operation. It has become apparent from the several Petitions for Reconsideration that we should set aside additional frequency ranges that would be free from repeater operation. We will therefore not allow repeater or auxiliary operation in the 220.0-220.5 MHz and 431-433 MHz ranges. According to the petitioners, these subbands contain the bulk of the experimentation with moon bounce and satellite transmissions being carried out today.

28. At the same time, we do not feel that the other two subbands mentioned by the petitioners require protection. 222.0-222.5 MHz was a part of the original repeater subband of 222-225 MHz when repeater subbands were established in 1972, and we can see no reason to afford it any protection now. 1290-1300 MHz was cited by two petitioners as requiring protection for future satellite activity. To the best of our knowledge, there are no repeaters in the United States in that band, nor is there any satellite activity. We would prefer, given these circumstances, to await future development of the band by amateurs, fully expectant that the band is wide enough to accommodate many amateur activities.[1]

29. *Technician Class privileges.* The Commission has proposed in Docket 20282 to give Technician Class operators full privileges in the two meter band, 144-148 MHz. This would, in effect, give to Technician Class amateurs the privileges sought by the petitioners in this docket. Therefore, the Commission today is adopting a Second Report and Order in Docket 20282 granting, among other things, full privileges to Technician Class operators in the 144-148 MHz band.

30. Accordingly, in view of the foregoing: *It is ordered,* That the Petitions for Reconsideration of the Commission's action in Docket 21033 submitted by the American Radio Relay League, Robert Bingham, Laurent J. Blouin, the Chicago FM Club, the Michigan Area Repeater Council, Joseph H. Reisert, Jr., the San Antonio Repeater Organization, and Paul Wade are granted to the extent indicated in paragraphs 23, 27, and 29, supra, and are otherwise denied. *It is further ordered,* That the Petition to Modify the Stay Order filed by the American Radio Relay League is dismissed as moot. *It is further ordered,* That pursuant to authority contained in Sections 4(i) and 303 of the Communications Act of 1934, as amended, Part 97 of the Commission's Rules IS AMENDED as set forth in the attached Appendix, effective May 15, 1978. *It is further ordered,* That the Stay Order in Docket 21033, adopted November 4, 1977, and the "freeze" announced in that Stay Order on the filing of applications for new repeater, auxiliary link and control station licenses are continued until the effective date of these regulations.

(Secs. 4, 303, 307, 48 Stat., as amended, 1066, 1082, 1083; 47 U.S.C. 154, 303, 307.)

FEDERAL COMMUNICATIONS COMMISSION,
WILLIAM J. TRICARICO,
Secretary.

Part 97 of Chapter 1 of Title 47 of the Code of Federal Regulations is amended, as follows:

1. In § 97.3, paragraph (i) is deleted, paragraphs (j), (k), and (l) are redesignated (i), (j), and (k), respectively, paragraph (m) is redesignated paragraph (l) and in that paragraph, the definition of amateur radio operation is amended, and new definitions of repeater operation and auxiliary operation are added, paragraph (n) is redesignated paragraph (m) and in that paragraph, the definitions of control and automatic control are amended, and paragraphs (o), (p), (q), (r), (s), (t), (u), (v), (w), (x), (y), (z), and (aa), are redesignated (o), (p), (q), (r), (s), (t), (u), (v), (w), (x), (y), and (z) respectively.

§ 97.3 Definitions.

* * * * * *

(l) *Amateur radio operation.* Amateur radio communication conducted by amateur radio operators from amateur radio stations, including the following:

* * * * * *

Mobile operation. Radiocommunication conducted while in motion or during halts at unspecified locations.

Repeater operations. Radiocommunication, other than auxiliary operation, for retransmitting automatically the radio signals of other amateur radio stations.

Auxiliary operations. Radiocommunication for remotely controlling other amateur radio stations, for automatically relaying the radio signals of other amateur radio stations in a system of stations, or for intercommunicating with other amateur radio stations in a system of amateur radio stations.

(m) *Control* means techniques used for accomplishing the immediate operation of an amateur radio station. Control includes one or more of the following:

* * * * * *

(3) *Automatic control* means the use of devices and procedures for control so that the control operator does not have to be present at the control point at all times. (Only rules for automatic control of stations in repeater operation have been adopted.

* * * * * *

§ 97.40 [Amended]

2. In § 97.40, paragraphs, (c), (d), and (e), are deleted.

§ 97.41 [Amended]

3. In § 97.41, paragraphs (b) and (c) are deleted, and paragraph (d) and and (e) are redesignated paragraphs (b) and (c) respectively.

4. § 97.43 is revised to read, as follows:

§ 97.43 Location of station.

Every amateur radio station shall

[1] See n. 1, supra at 4.

have one land location, the address of which appears in the station license, and at least one control point.

5. In § 97.61, paragraphs (a) and (c) are revised and a new paragraph (d) is added, as follows:

§ 97.61 Authorized frequencies and emissions.

(a) The following frequency bands and associated emission are available to amateur radio stations for amateur radio operation, other than repeater and auxiliary operation, subject to the limitations of Section 97.65 and paragraph (b) of this section. * * *

* * * * *

(c) All amateur frequency bands above 29.5 MHz are available for repeater operation, except 50.0-52.0 MHz, 144.0-144.5 MHz, 145.5-146.0 MHz, 220.0-220.5 MHz, 431.0-433.0 MHz, and 435.0-438.0 MHz. Both the input (receiving) and output (transmitting) frequencies of a station in repeater operation shall be frequencies available for repeater operation.

(d) All amateur frequency bands above 220.5 MHz, except 431-433 MHz, and 435-438 MHz, are available for auxiliary operation.

6. In § 97.63, the headnote is revised and the text amended, as follows:

§ 97.63 Selection and use of frequencies.

(a) An amateur station may transmit on any frequency within any authorized amateur frequency band.

(b) Sideband frequencies resulting from keying or modulating a carrier wave shall be confined within the authorized amateur band.

(c) The frequencies available for use by a control operator of an amateur station are dependent on the operator license classification of the control operator and are listed in § 97.7.

7. In § 97.67, paragraph (c) is revised to read, as follows:

§ 97.67 Maximum authorized power.

* * * * *

(c) Within the limitations of paragraphs (a) and (b) of this section, the effective radiated power of an amateur radio station in repeater operation shall not exceed the power specified for the antenna height above average terrain in the following table:

Antenna height above average terrain	Maximum effective radiated power for frequency bands above			
	52 MHz	144.5 MHz	420 MHz	1215 MHz
	Watts	*Watts*		
Below 50 ft	100	800	Paragraphs (a) and (b).	Paragraphs (a) and (b).
50-99 ft	100	400	......do	Do.
100-499 ft	50	400	800 W	Do.
500-999 ft	25	200	......do	Do.
Above 1,000 ft	25	100	400 W	Do.

8. § 97.83 is redesignated § 97.82, as follows:

§ 97.82 Availability of operator license.

* * * * *

9. § 97.85 is redesignated § 97.83, as follows:

§ 97.83 Availability of station license.

* * * * *

10. § 97.87 is redesignated § 97.84, and paragraphs (c), (d), and (e) are revised, as follows:

§ 97.84 Station identification.

* * * * *

(c) An amateur radio station in repeater operation or a station in auxiliary operation used to relay automatically the signals of other stations in a system of stations shall be identified by radiotelephony or radiotelegraphy at a level of modulation sufficient to be intelligible through the repeated transmission at intervals not to exceed ten minutes.

(d) When an amateur radio station is in repeater or auxiliary operation, the following additional identifying information shall be transmitted:

(1) When identifying by radiotelephony, a station in repeater operation shall transmit the word "repeater" at the end of the station call sign. When identifying by radiotelegraphy, a station in repeater operation shall transmit the fraction bar DN followed by the letters "RPT" or "R" at the end of the station call sign. (The requirements of this subparagraph do not apply to stations having call signs prefixed by the letters "WR".)

(2) When identifying by radiotelephony, a station in auxiliary operation shall transmit the word "auxiliary" at the end of the station call sign. When identifying by radiotelegraphy, a station in auxiliary operation shall transmit the fraction bar DN followed by the letters "AUX" or "A" at the end of the station call sign.

(e) A station in auxiliary operation may be identified by the call sign of its associated station.

* * * * *

11. A new § 97.85 is added, as follows:

§ 97.85 Repeater operation.

(a) Emissions from a station in repeater operation shall be discontinued within five seconds after cessation of radiocommunications by the user station. Provisions to limit automatically the access to a station in repeater operation may be incorporated but are not mandatory.

(b) Except for operation under automatic control, as provided in paragraph (e) of this section, the transmitting and receiving frequencies used by a station in repeater operation shall be continuously monitored by a control operator immediately before and during periods of operation.

(c) A station in repeater operation shall not concurrently retransmit amateur radio signals on more than one frequency in the same amateur frequency band, from the same location.

(d) A station in repeater operation shall be operated in a manner ensuring that it is not used for one-way communications, except as provided in § 97.91.

(e) A station in repeater operation, either locally controlled or remotely controlled, may also be operated by automatic control when devices have been installed and procedures have been implemented to ensure compliance with the rules when a duty control operator is not present at a control point of the station. Upon notification by the Commission of improper operation of a station under automatic control, operation under automatic control shall be immediately discontinued until all deficiencies have been corrected.

12. A new § 97.86 is added, as follows:

§ 97.86 Auxiliary operation.

(a) A station in auxiliary operation, either locally controlled or remotely controlled, may also be operated by automatic control when it is operated as part of a system of stations in repeater operation operated under automatic control.

(b) If a station in auxiliary operation is relaying signals of another amateur radio station(s) to a station in repeater operation, the station in auxiliary operation may use an input (receiving) frequency in frequency bands reserved for auxiliary operation, repeater operation, or both.

(c) A station in auxiliary operation shall be used only to communicate with stations shown in the system network diagram.

13. In Section 97.88, the headnote, introductory paragraph, paragraphs (a), (b), (c), and (e) are amended to read as follows:

§ 97.88 Operation of a station by remote control.

An amateur radio station may be operated by remote control only if there is compliance with the following:

(a) A photocopy of the remotely controlled station license shall be—

(1) Posted in a conspicuous place at the remotely controlled transmitter location, and

(2) Placed in the station log of each authorized control operator.

(b) The name, address, and telephone number of the remotely controlled station licensee and at least one control operator shall be posted in a conspicuous place at the remotely controlled transmitter location.

(c) Except for operation under automatic control, a control operator shall be on duty when the station is being remotely controlled. Immediately before and during the periods the remotely controlled station is in operation, the frequencies used for emission by the remotely controlled station shall be monitored by the control operator. The control operator shall terminate all transmissions upon any deviation from the rules.

* * * * *

(e) A station in repeater operation shall be operated by radio remote control only when the control link uses frequencies other than the input (receiving) frequencies of the station in repeater operation.

§ 97.89 [Amended].

14. In § 97.89, paragraphs (c) and (d) are deleted.

15. Section 97.95(a)(1) is revised to read, as follows:

§ 97.95 Operation away from the authorized fixed station location.

(a) * * *

(1) When there is no change in the authorized fixed operation station location, an amateur radio station, other than a military recreation station, may be operated portable or mobile under its station license anywhere in the United States, its territories or possessions, subject to Section 97.61.

* * * * *

16. In Section 97.103, paragraph (c)(5) is deleted, paragraphs (c), (c)(1), (c)(2), (c)(3), (c)(4), (d), (e), (e)(1), (e)(2), (e)(3), (e)(4), (e)(5) are amended, and (e)(6) and (e)(7) are added; paragraph (f) as amended, is redesignated as paragraph (g), and a new paragraph (f) is added to read as follows:

§ 97.103 Station log requirements.

* * * * *

(c) In addition to the other information required by this section, the log of a remotely controlled station shall have entered the names, addresses, and call signs of all authorized control operators and a functional block diagram of, and a technical explanation sufficient to describe the operation of the control link. Additionally, the following information shall be entered:

(1) A description of the measures taken for protection against access to the remotely controlled station by unauthorized persons;

(2) A description of the measures taken for protection against unauthorized station operation, either through activation of the central link, or otherwise;

(3) A description of the provisions for shutting down the station in the case of control link malfunction; and

(4) A description of the means used for monitoring the transmitting frequencies.

(d) When a station has one or more associated stations, that is, stations in repeater or auxiliary operation, a system network diagram shall be entered in the station log.

(e) In addition to the other information required by this section, the log of a station in repeater operation transmitting with an effective radiated power greater than the minimum effective radiated power listed in § 97.67(c) for the frequency band in use shall contain the following:

(1) The location of the station transmitting antenna, marked upon a topographic map having a scale of 1:250,000 and contour intervals[1];

(2) The antenna transmitting height above average terrain[2];

(3) The effective radiated power in the horizontal plane for the main lobe of the antenna pattern, calculated for maximum transmitter output power;

(4) The transmitter output power;

(5) The loss in the transmission line between the transmitter and the antenna, expressed in decibels;

(6) The relative gain in the horizontal plane of the transmitting antenna; and

(7) The horizontal and vertical radiation patterns of the transmitting antenna, with reference to true north (for horizontal pattern only), expressed as relative field strength (voltage) or in decibels, drawn upon polar coordinate graph paper, and the method used in determining these patterns.

(f) In addition to the other information required by this section, the log of a station in auxiliary operation shall have the following information entered:

(1) A system network diagram for each system with which the station is associated;

(2) The station transmitting band(s);

(3) The transmitter input power; and

(4) If operated by remote control, the information required by paragraph (c) of this section.

(g) Notwithstanding the provisions of § 97.105, the log entries required by paragraphs (c), (d), (e), and (f) of this section shall be retained in the station log as long as the information contained in those entries is accurate.

§ 97.109 [Deleted]

17. § 97.109 is deleted.

§ 97.110 [Deleted]

18. § 97.110 is deleted.

§ 97.111 [Deleted]

19. § 97.111 is deleted.

20. § 97.126 is revised to read, as follows:

§ 97.126 Retransmitting radio signals.

(a) An amateur radio station, except a station in repeater operation or auxiliary operation, shall not automatically retransmit the radio signals of other amateur radio stations.

(b) A remotely controlled station, other than a remotely controlled station in repeater operation or auxiliary operation, shall automatically retransmit only the radio signals of stations in auxiliary operation shown on the remotely controlled station's system network diagram.

21. § 97.181(b) is amended to read as follows:

§ 97.181 Availability of RACES station license and operator licenses.

* * * * *

(b) In addition to the operator license availability requirements of § 97.82, a photocopy of the control operator's amateur radio operator license shall be posted in a conspicuous place at the control point of the RACES station.

AMATEUR RADIO SERVICE

Amateur Station Call Sign Assignment System

MARCH 30, 1978.

Effective March 24, 1978, section 97.51 of the Amateur Radio Service regulations requires amateur station call signs to be issued systematically, with details of the system to be made public. The following system will be effective until further notice.

WHICH PAST POLICIES AND RULES HAVE BEEN ELIMINATED?

(a) All prior call sign policies and procedures, written or unwritten, are cancelled and are hereby replaced.

(b) No requests for specific call signs will be honored.

WHAT WILL HAPPEN TO EXISTING STATIONS?

[1]Indexes and ordering information for suitable maps are available from the U.S. Geologic Survey, Washington, D.C. 20242, or from the Federal Center, Denver, Colo. 80255.

[2]See Appendix 5.

(c) All amateurs may continue to hold their existing primary station call signs unless they request a change, even if they are moving to new call sign areas.

(d) Section 97.40 of the Commission's Rules permits only one primary station per operator. Although this is not a new limitation, licensees may have received more than one primary call sign due to processing erros. Any such licensees must choose one of the primary call signs for their sole primary station, and submit the other license for cancellation by October 1, 1978.

(e) No new secondary or special event station licenses will be issued. Existing licenses will not be renewed or modified, but may continue to operate until their expiration dates. We will permit a holder to transfer an existing secondary station call sign to the primary station anytime prior to expiration. The secondary station license will be cancelled at that time.

How Will Future Call Signs Be Assigned?

(f) (1) Initial assignment of call sign digits will conform to Table A in the contiguous 48 states and the District of Columbia:

Table A

Digit	Location
1	Maine, New Hampshire, Vermont, Massachusetts, Rhode Island, Connecticut.
2	New York, New Jersey.
3	Pennsylvania, Delaware, Maryland, District of Columbia.
4	Virginia, North Carolina, South Carolina, Georgia, Florida, Alabama, Tennessee, Kentucky.
5	Mississippi, Louisiana, Arkansas, Oklahoma, Texas, New Mexico.
6	California.
7	Oregon, Washington, Idaho, Montana, Wyoming, Arizona, Nevada, Utah.
8	Michigan, Ohio, West Virginia.
9	Illinois, Indiana, Wisconsin.
10	Colorado, Nebraska, North Dakota, South Dakota, Minnesota, Iowa, Missouri.

(2) Initial assignment of call sign prefixes will conform to Table B outside the contiguous 48 states:

Table B

Prefix	Location
AH1, KH1, NH1, WH1	Baker, Canton, Enderbury, Howland Islands.
AH2, KH2, NH2, WH2	Guam.
AH3, KH3, NH3, WH3	Johnston Island.
AH4, KH4, NH4, WH4	Midway Island.
AH5K, KH5K, NH5K, WH5K	Kingman Reef.
AH5, KH5, NH5, WH5	(Except K suffix) Palmyra, Jarvis Islands.
AH6, KH6, NH6, WH6	Hawaii.
AH7, KH7, NH7, WH7	Kure Island.
AH8, KH8, NH8, WH8	American Samoa.
AH9, KH9, NH9, WH9	Wake, Wilkes, Peale Islands.
AL7, KL7, NL7, WL7	Alaska.
KP1, NP1, WP1	Navassa Island.
KP2, NP2, WP2	Virgin Island.
KP3, NP3, WP3	Rancador Key, Quita Sueno Bank, Serrana Bank, Serranilla Bank.
KP4, NP4, WP4	Puerto Rico.

The digit or prefix from the Tables will be determined by the location of the licensee's bona fide mailing address. When the mailing address is modified, the station will automatically retain the current call sign even if the new address no longer conforms to the digit or prefix for that location. However, a licensee may request a new systematically assigned call sign conforming to the Tables. Counterpart call signs will not be issued.

Although some call sign prefixes in Table B may not be assigned for lack of a bone fide mailing address, the entries are provided for future reference, and to enable amateurs to have a distinct identifier when operating a portable station from these locations.

What Types of Call Signs Will Be Available?

(g) Amateur call sign blocks will be categorized into five major groups.

For the contiguous United States:

(1) Group A contains all 1 x 2, most 2 x 1, and most "A" prefixed 2 x 2 call signs;

(2) Group B contains most "K", "N", and "W" prefixed 2 x 2 call signs;

(3) Group C contains all 1 x 3 call signs;

(4) Group D contains most "K" and "W" prefixed 2 x 3 call signs; and

(5) Group X contains "WC", "WK", "WM", "WR", and "WT" prefixed 2 x 3 call signs.

For the noncontinguous United States:

(1) Group A contains "AH", "KH", "NH", "WH", "AL7", "KL7", "NL7", "WL7", "KP", "NP", and "WP" prefixed 2 x 1 call signs;

(2) Group B contains "AH", "AL7", and "KP" prefixed 2 x 2 call signs;

(3) Group C contains "KH", "NH", "WH", "KL7", "NL7", "WL7", "NP", and "WP" prefixed 2 x 2 call signs;

(4) Group D contains "KH", "WH", "KL7", "WL7", "KP", and "WP" prefixed 2 x 3 call signs; and

(5) Group X contains "WC", "WK", "WM", "WR", and "WT" prefixed 2 x 3 call signs.

(See Appendix attached to this release which lists all Groups and the call sign blocks which are contained within each Group.)

Who Is Eligible to Request a New Call Sign March 24?

(h) To apportion workload to a manageable level and to gain experience in implementing the new system, we will accept requests for call sign changes only from the following four groups:

(1) Newly licensed operators;

(2) Amateur Extra Class licensees;

(3) Licensees who upgrade their operator privileges; and

(4) Licensees who change their mailing addresses to new call sign areas.

In future phases, we anticipate permitting Advanced Class licensees to request Group B or Group C call signs, and General and Technician Class, Group C call signs.

What About Amateur Extra Class Licensees?

(i) Amateur Extra Class licensees holding Group B call signs may request Group A call signs; Amateur Extra Class licensees holding Group C call signs may request Group B or Group A call signs; and Amateur Extra Class licensees holding Group D call signs may request Group C, Group B, or Group A call signs.

(j) Amateur Extra Class licensees who now hold Group A 2 x 2 call signs beginning with "AA" may request a change within Group A. Such requests must be submitted by October 1, 1978. A 2 x 1 call sign will be issued in exchange for the 2 x 2 "AA" call sign.

What About Licensees Who Upgrade?

(k) A licensee who upgrades his license to a higher operator class may request a new call sign according to the following. If no request is made, his station will retain its present call sign.

(1) Upgrades to Amateur Extra:

(a) Now holding Group B may request Group A;

(b) Now holding Group C may request Group A, or Group B; and

(c) Now holding Group D may request Group A, or Group B; or Group C.

(2) Upgrades to Advanced:

(a) Now holding Group C may request Group B; and

(b) Now holding Group D may request Group C or Group B.

(3) Upgrades to General and Technician Class now holding Group D may request Group C.

What About Newly Licensed Operators?

(l) Newly licensed operators who do not presently have a station call sign will have no choice of format. Their stations will automatically be assigned call signs per Table C.

Table C

(1) Amateur Extra Class operators receive Group A call signs;

(2) Advanced Class operators receive Group B call signs;

(3) General Class operators receive Group C call signs;

(4) Technician Class operators receive Group C call signs; and

(5) Novice Class operators receive Group D call signs;

What About A Licensee Moving to a New Call Sign Area?

(m) A licensee who changes his permanent mailing address to a new call sign area may request a call sign change. In these cases, a station will be assigned a call sign from the same Group (A, B, C, or D) as the call sign now held. The only exceptions are the following:

(1) Advanced Class operators holding Group A may request only Group B; and

(2) General or Technician Class operators holding Group A or Group B may request only Group C.

What About Licensees Who Renew?

(n) Upon renewal, the station will retain the same call sign, unless the li-

GROUP A

AMATEUR RADIO SERVICE—CALL SIGN ASSIGNMENT ORDER

Block No.	CONTIGUOUS USA	PACIFIC AREA	ALASKA AREA	ATLANTIC AREA
1.	K # ee	AH # e	AL 7 e	KP # e
2.	N # ee	KH # e	KL 7 e	NP # e
3.	W # ee	NH # e	NL 7 e	WP # e
4.	AA # e	WH # e	WL 7 e	GROUP B
5.	AB # e	GROUP B	GROUP B	
6.	AC # e			
7.	AD # e			
8.	AE # e			
9.	AF # e			
10.	AG # e			
11.	AI # e			
12.	AJ # e			
13.	AK # e			
14.	KA # e			
15.	KB # e			
16.	KC # e			
17.	KD # e			
18.	KE # e			
19.	KF # e			
20.	KG # e			
21.	KI # e			
22.	KJ # e			
23.	KK # e			
24.	KM # e			
25.	KN # e			
26.	KO # e			
27.	KQ # e			
28.	KR # e			
29.	KS # e			
30.	KT # e			
31.	KU # e			
32.	KV # e			
33.	KW # e			
34.	KX # e			
35.	KY # e			
36.	KZ # e			
37.	NA # e			
38.	NB # e			
39.	NC # e			
40.	ND # e			
41.	NE # e			
42.	NF # e			
43.	NG # e			
44.	NI # e			
45.	NJ # e			
46.	NK # e			
47.	NM # e			
48.	NN # e			
49.	NO # e			
50.	NQ # e			

Block No.	CONTIGUOUS USA
51.	NR # e
52.	NS # e
53.	NT # e
54.	NU # e
55.	NV # e
56.	NW # e
57.	NX # e
58.	NY # e
59.	NZ # e
60.	WA # e
61.	WB # e
62.	WC # e
63.	WD # e
64.	WE # e
65.	WF # e
66.	WG # e
67.	WI # e
68.	WJ # e
69.	WK # e
70.	WM # e
71.	WN # e
72.	WO # e
73.	WQ # e
74.	WR # e
75.	WS # e
76.	WT # e
77.	WU # e
78.	WV # e
79.	WW # e
80.	WX # e
81.	WY # e
82.	WZ # e
83.	AA # ee
84.	AB # ee
85.	AC # ee
86.	AD # ee
87.	AE # ee
88.	AF # ee
89.	AG # ee
90.	AI # ee
91.	AJ # ee
92.	AK # ee
93.	GROUP B

GROUP B

AMATEUR RADIO SERVICE—CALL SIGN ASSIGNMENT ORDER

Block No.	CONTIGUOUS USA	PACIFIC AREA	ALASKA AREA	ATLANTIC AREA
1.	KA 1 ee	AH # ee	AL 7 ee	KP # ee
2.	KB # ee	GROUP C	GROUP C	GROUP C
3.	KC # ee (EXCEPT KC6)			
4.	KD # ee			
5.	KE # ee			
6.	KF # ee			
7.	KG # ee (EXCEPT KG4, KG6R, KG6S)			
8.	KI # ee			
9.	KJ # ee			
10.	KK # ee			
11.	KM # ee			
12.	KN # ee			
13.	KO # ee			
14.	KQ # ee			
15.	KR # ee (EXCEPT KR6)			
16.	KS # ee			
17.	KT # ee			
18.	KU # ee			
19.	KV # ee			
20.	KW # ee			
21.	KX # ee (EXCEPT KX6)			
22.	KY # ee			
23.	KZ # ee (EXCEPT KZ5)			
24.	NA # ee			
25.	NB # ee			
26.	NC # ee			
27.	ND # ee			
28.	NE # ee			
29.	NF # ee			
30.	NG # ee			
31.	NI # ee			
32.	NJ # ee			
33.	NK # ee			
34.	NM # ee			
35.	NN # ee			
36.	NO # ee			
37.	NQ # ee			
38.	NR # ee			
39.	NS # ee			
40.	NT # ee			
41.	NU # ee			
42.	NV # ee			
43.	NW # ee			
44.	NX # ee			
45.	NY # ee			
46.	NZ # ee			
47.	WA # ee			
48.	WB # ee			
49.	WC # ee			
50.	WD # ee			

Block No.	CONTIGUOUS USA
51.	WE # ee
52.	WF # ee
53.	WG # ee
54.	WI # ee
55.	WJ # ee
56.	WK # ee
57.	WM # ee
58.	WN # ee
59.	WO # ee
60.	WQ # ee
61.	WR # ee
62.	WS # ee
63.	WT # ee
64.	WU # ee
65.	WV # ee
66.	WW # ee
67.	WX # ee
68.	WY # ee
69.	WZ # ee
70	GROUP C

July 1978

censee qualifies for and requests a call sign change.

Which Call Signs Will Be Assigned?

(o) Call sign assignments will begin as follows:

	Contiguous U.S.	Non-contiguous U.S.
Group:		
A	Block 4	Block 1.
B	Block 1	Do.
C	Block 2	Do.
D	Block 1	Block 2.

(p) Available call sign suffixes will be assigned in alphabetical sequence; for 2x3 and 1x3 call signs, this would involve the sequences AAA, AAB, AAC, and so on, through ZZZ; for 2x2 and 1x2 call signs, the sequences AA through ZZ, for 2x1 call signs, the sequence A through Z

(q) When all assignments have been made from a particular block, the next assignment will be made from the next consecutive block within the group. Periodically, the licensee data base will be scanned to recover the unassigned call signs from prior blocks. These will be added to the lists of call signs available for immediate assignment.

How Do Amateurs Apply For Call Sign Changes?

(r) Licensees must request a call sign Group for which they are eligible on FCC Form 610, Item 13. The only request which may be made is for a particular Group. No request will be honored for specific call signs, call sign blocks, prefixes, or suffixes within a block. If a group preference is not indicated in Item 13 or the applicant is not eligible for the group he requests, the group will be assigned systematically according to Table C.

(s) When a licensee's permanent station location is changed, a Form 610 must be filed giving the new location. (Station location is no longer used in determining the selection of call sign digits; therefore, a change of station location may not be used as the basis for requesting a change of call sign.)

(t) Applicants requesting exchange of secondary call signs for primary call signs must attach a written request to their Forms 610.

Group X.—*Amateur radio service—call sign assignment order*

	All Areas
Races	WT # ƶƶƶ
Club	WK # ƶƶƶ
Military recreation	WM # ƶƶƶ
Repeaters	WR # ƶƶƶ
Temporary licenses	WT # ƶƶƶ

Federal Communications Commission,
William J. Tricarico,
Secretary.

PERMITTING SHIP RADIOTELEGRAPH STATIONS TO COMMUNICATE WITH AMATEUR STATIONS

AGENCY: Federal Communications Commission.

ACTION: Proposed rule making.

SUMMARY: This document proposes the deletion of certain sections of the Commission's rules and regulations relating to the granting of licenses, modification of licenses, renewal of license, or special temporary authorization permitting a ship radiotelegraph station to communicate with amateur stations. These rules no longer serve any useful purpose in the present regulatory scheme, consequently, the Commission is proposing to delete them from the regulations.

DATES: Comments must be received on or before June 12, 1978, and Reply Comments must be received on or before June 22, 1978.

ADDRESSES: Federal Communications Commission, Washington, D.C. 20654.

FOR FURTHER INFORMATION CONTACT:

John C. K. Hays, Safety and Special Radio Services Bureau, 202-632-7197.

SUPPLEMENTARY INFORMATION:

Adopted: April 26, 1978; Released: May 9, 1978. By the Commission:

1. Notice of Proposed Rulemaking in the above-entitled matter is hereby given.

2. Under sections 83.50 and 83.70 of the rules, the Commission may grant a license, modification of license, renewal of license, or special temporary authorization permitting a ship radiotelegraph station on board a vessel not engaged in commerce or a vessel used, or intended to be used, for scientific research or expedition, to transmit by means of Class A1 or A2 emission on authorized ship telegraph frequencies within the band 2000 kHz to 25,000 kHz, for the purpose of exchanging radiotelegraph communications directly with licensed amateur stations on land. This authorization may only be granted upon a showing that: (1) Unusual circumstances make direct communications with amateur stations extremely beneficial to persons on board or to persons responsible for the scientific expedition; (2) messages will not relate to commercial communications; and (3) no harmful inteference will result to stations in the maritime mobile service nor to stations in the radiolocation service.

3. It now appears that these rule sections, which were adopted in 1939, serve no useful purpose under the present regulatory scheme. A review of our license file disclosed that no ship station is presently authorized under these sections to communicate with amateur stations. Moreover, if communications between a vessel and amateur stations is desired, an amateur mobile station, which is a radio installation separate from the ship station, can be operated aboard the vessel provided the operator is a licensed amateur and the requirements of sections 97.101 and 97.114 of the Amateur Rules are observed. We, therefore, are proposing to delete sections 83.50 and 83.70, as shown in the attached Appendix.

4. The proposed amendments to the rules as set forth in the Appendix are issued pursuant to the authority contained in sections 4(i) and 303(r) of the Communications Act of 1934, as amended.

5. Pursuant to applicable procedures set forth in section 1.415 of the Commission's rules, interested persons may file comments on or before June 12, 1978, and reply comments on or before June 22, 1978. All relevant and timely comments and reply comments will be considered by the Commission before final action is taken in this proceeding. In reaching its decision in this proceeding, the Commission may also take into account other relevant information before it, in addition to the specific comments invited by this Notice.

6. In accordance with the provisions of Section 1.419 of the Commission's rules, an original and 5 copies of all statements, briefs or comments filed shall be furnished to the Commission. Responses will be available for public inspection during regular business hours in the Commission's Public Reference Room at its headquarters in Washington, D.C.

Federal Communications Commission,
William J. Tricarico,
Secretary.

Part 83 of Chapter I of Title 47 of the Code of Federal Regulations is amended as follows:

§ 83.50 [Deleted]

1. Section 83.50 is deleted and designated as [Reserved].

§ 83.70 [Deleted]

2. Section 83.70 is deleted and designated as [Reserved].

GROUP C

AMATEUR RADIO SERVICE—CALL SIGN ASSIGNMENT ORDER

Block No.	CONTIGUOUS USA	PACIFIC AREA	ALASKA AREA	ATLANTIC AREA
1.	K # ƶƶƶ	KH # ƶƶ	KL 7 ƶƶ	NP # ƶƶ
2.	N # ƶƶƶ	NH # ƶƶ	NL 7 ƶƶ	WP # ƶƶ
3.	W # ƶƶƶ	WH # ƶƶ	WL 7 ƶƶ	GROUP D
4.	GROUP D	GROUP D	GROUP D	

GROUP D

AMATEUR RADIO SERVICE—CALL SIGN ASSIGNMENT ORDER

Block No.	CONTIGUOUS USA	PACIFIC AREA	ALASKA AREA	ATLANTIC AREA
1.	KA # ƶƶƶ	KH # ƶƶƶ	KL7 ƶƶƶ	KP # ƶƶƶ
2.	KB # ƶƶƶ	WH # ƶƶƶ	WL7 ƶƶƶ	WP # ƶƶƶ
3.	KC # ƶƶƶ (*)			
4.	KD # ƶƶƶ			
5.	KE # ƶƶƶ	*EXCEPT KC4AAA-AAP, KC4USA-USZ		
6.	KF # ƶƶƶ			
7.	KG # ƶƶƶ			
8.	KI # ƶƶƶ			
9.	KJ # ƶƶƶ			
10.	KK # ƶƶƶ			
11.	KM # ƶƶƶ			
12.	KN # ƶƶƶ			
13.	KO # ƶƶƶ			
14.	KQ # ƶƶƶ			
15.	KR # ƶƶƶ			
16.	KS # ƶƶƶ			
17.	KT # ƶƶƶ			
18.	KU # ƶƶƶ			
19.	KV # ƶƶƶ			
20.	KW # ƶƶƶ			
21.	KX # ƶƶƶ			
22.	KY # ƶƶƶ			
23.	KZ # ƶƶƶ			
24.	WA # ƶƶƶ			
25.	WB # ƶƶƶ			
26.	WD # ƶƶƶ			
27.	WE # ƶƶƶ			
28.	WF # ƶƶƶ			
29.	WG # ƶƶƶ			
30.	WI # ƶƶƶ			
31.	WJ # ƶƶƶ			
32.	WN # ƶƶƶ			
33.	WO # ƶƶƶ			
34.	WQ # ƶƶƶ			
35.	WS # ƶƶƶ			
36.	WU # ƶƶƶ			
37.	WV # ƶƶƶ			
38.	WW # ƶƶƶ			
39.	WX # ƶƶƶ			
40.	WY # ƶƶƶ			
41.	WZ # ƶƶƶ			

Ham Help

I need some "Ham Help." Recently, I purchased a Johnson Viking Invader 2000 transmitter in mint condition, but without the manual. Does anyone have a manual for this rig that I could purchase outright? If not, I will pay the owner to make a photostatic copy for me. If a manual or copy of one isn't available, I'd still like to hear from past or present owners of this rig who might be able to give me the proper tune-up alignment procedure, and meter readings during operation.

Rod Robbins WA7IRY
14980 SW 96th
Tigard OR 97223

I have a Knight R-100A general coverage receiver that has a bad main tuning capacitor. The capacitor has (R/C) stamped on the rear, upper left-hand corner. Does anyone know who might have made this capacitor? Does anyone know where I might get parts for Knight radio equipment? I also need a schematic of the R-100A. Any information would help.

Frederick J. Erickson
105 G St.
Turners Falls MA 01376

I need an operating manual and schematic for the Phasemaster IIB transmitter made by Lakeshore Industries in 1959. Hi, Inc., doesn't have it in their catalog of old manuals. I will pay for photocopy and postage.

Frederick John Onucki WA2SKP
63 Highland Ave.
Metuchen NJ 08840

At a recent hamfest, I acquired a large, transistorized six-digit multimeter, Model 882, made by Electro Instruments, which is now out of business. The meter is autoranging and works fine, but I have no schematic or calibration information. If anyone can provide this info, I will be happy to pay the costs.

Fred Snow W2IFR
Big Look Trail
Medford NJ 08055

Social Events

from page 144

Utah) Hamfest will be held on August 4, 5, and 6, 1978, at Macks Inn, Idaho, 25 miles south of West Yellowstone, Montana. Talk-in on 146.34/94 and 3935. Advance registration is $6.00 for adults and $2.00 for children, before July 25th, 1978. Late/regular registration is $7.00 and $2.50. There will be a special prize drawing for preregistration. Please send preregistration to: WIMU Hamfest, 3645 Vaughn Street, Idaho Falls, Idaho 83401; phone (208)-522-9568.

PETOSKEY MI
AUG 5

The 3rd annual Straits Area Radio Club swap and shop will be held on Saturday, August 5, at the Emmet County Fairgrounds, Charlevoix Avenue, Petoskey, Michigan, from 9 am to 3 pm. Talk-In on 146.52. Food services, prizes. Tickets will be $1.50 at the door. Campsites nearby. For information, write to SARC in care of W8IZS, Box 416, Pellston MI 49769.

JACKSONVILLE FL
AUG 5-6

The Jacksonville Hamfest Association is happy to announce the 5th annual Jacksonville hamfest which will be held on August 5 and 6, at the Jacksonville Beach Municipal Auditorium. Activities will Include the usual swap tables and exhibitors' displays. Featured programs include a DX presentation by the North Florida DX Assn. on that group's recent DXpedition to Haiti at the invitation of the Haitian government. Shortly after the trip, amateur radio was legalized in Haiti after being outlawed for many years. NFDXA also has two *CQ Magazine* world championships to their credit. A complete seminar on microprocessors will also be featured, along with a "pileup" contest, hidden transmitter hunt, QLF contest, and ARRL meeting. Advanced tickets are now available for $2.50 per person ($3 at the door), with swap tables available for $5 per day. The hamfest site is only one block from the Atlantic Ocean, and those attending can bring their families for a weekend of fun on the beach. Door prizes and hourly drawings will be conducted. All inquiries should be directed to N4UF, Hamfest Chairman, 911 Rio St. Johns Dr., Jacksonville FL 32211. Phone is 744-9501.

SALINE MI
AUG 6

The Arrow Repeater will sponsor its 3rd Annual Swap and Shop on Sunday, August 6, 1978, at the Saline MI fairgrounds. Indoor and outdoor exhibits, refreshments, and prizes will be featured. Doors open at 8:00 am. Check-in on 146.37/97 and 146.52. Admission is $1.50 advance; $2.00 at the door. Display space is $.50/ft. For more info, advance tickets, or table reservations, write Arrow, Box 1572, Ann Arbor MI 48106.

UPPER ST. CLAIR TOWNSHIP PA
AUG 6

The 41st annual hamfest of the South Hills Brass Pounders and Modulators will be held on August 6, 1978, from noon to dusk, at St. Clair Beach on Route 19 south, Upper St. Clair Township. There will be a swap and shop, picnic area, and swimming for the family. Mobile check-In on 29.0 MHz and 146.52 simplex. Information and preregistration for $1.50 ($2.00 at the door) are available from Bruce Banister, 5954 Leprechaun Dr., Bethel Park PA 15102. Vendors must register.

LEVELLAND TX
AUG 6

The 13th annual Northwest Texas Emergency Net Picnic and Swapfest will be held Sunday, August 6, in the city park, Levelland TX. Registration begins at 8 am. Lunch at 12:30 pm. Bring your own picnic basket. Swapping all day with tables provided. This is a family event and is jointly sponsored by the Hockley County Amateur Radio Club and the Northwest Texas Emergency Net. Talk-In on 146.28/88. A $2.00 donation will be appreciated but not required.

DUTZOW MO
AUG 6

The annual Zero-Beaters Amateur Radio Club Hamfest will be held on Sunday, Aug. 6, at the Washington City Park. There is a large area for traders' row; no extra charge to exhibitors for displays. There is a picnic area, refreshments and lunches are available, and there are lots of prizes and activities for the ladies. Ham pilots can fly into our airport. Free transportation will be provided. For more info, write WAØFYA, Dutzow MO 63342.

CHARLOTTE VT
AUG 12-13

The International Field Days and Hamfest sponsored by the Burlington Amateur Radio Club will be held on August 12-13. Door prizes, raffles, contests, bingo for ladies, a two-day flea market, and much more. Chairman Bob W1DQO suggests early reservations for camping sites on site at Old Lantern, Charlotte VT 05445. Early bird registration at $3.00, with gate cost of $3.50. For other info, please write BARC, PO Box 312, Burlington VT 05402.

AMARILLO TX
AUG 11-13

The 1978 edition of the Golden Spread Amateur Radio Convention will be held at the Holiday Inn West Motor Hotel, 601 Amarillo Blvd. West, Amarillo, Texas, on Friday evening, Saturday, and Sunday, August 11, 12, and 13, 1978. It is sponsored by the Panhandle Amateur Radio Club of Amarillo. An area has been set aside for amateurs to display their trading and swapping gear. Two Hospitality Hours are slated: one for early arrivals the evening of Aug. 11 and the second for Saturday evening, Aug. 12. Six technical sessions will be held, featuring the very latest in communications expertise. Special activities for the ladies will be available so that there will be something for everyone. Preregistration will be $4.00 per person; registration at the door will be $6.00.

LEXINGTON KY
AUG 13

The Bluegrass Amateur Radio Club annual hamfest will be held at the National Guard Armory on August 13, starting at 8:00 am. There will be major prizes, forums, refreshments, a paved flea market area, a large indoor exhibit space, and plenty of free parking. Advance tickets are $2.50; $3.00 at the door. Flea market space is $1.00 extra. Talk-in on .16/.76. For more info, contact Paul Heflin WA4PAB, 434 Potomac Dr., Lexington KY 40503, (606)-278-0646.

CEDARTOWN GA
AUG 13

The Cedar Valley Amateur Radio Club of Cedartown, Georgia, will sponsor the Cedar Valley Hamfest, which will be held on August 13, 1978, from 9 am to 4 pm, at the Polk County Fairgrounds located one mile east of Cedartown on US 278. Talk-in frequency will be (WR4AZU) 147.72/.12. Food, drinks and lots of prizes! For more Information, please contact Jim T. Schliestett, Pres., W4IMQ, Cedar Valley ARC, PO Box 93, Cedartown GA 30125; telephone: (404)-748-5968.

POMONA CA
AUG 13

The Tri-County Amateur Radio Association will hold its annual hamfest on Sunday, August 13, 1978. Several prizes will be awarded including a Midland 220 MHz transceiver. Drawing tickets are 50¢ each. The winner need not be present. The hamfest/picnic will be at Westmont Park, West 9th Street, ½ mile west of Highway 71. For tickets or info, write to Box 142, Pomona CA 91769.

WILLOW SPRINGS IL
AUG 13

The Hamfesters 44th annual picnic and hamfest will be held on Sunday, August 13, 1978, at Santa Fe Park, 91st and Wolf Road, Willow Springs, Illinois, a southwest suburb of Chicago. There will be exhibits for OMs and XYLs and the famous swappers' row. Tickets at the gate will be $2.00; in advance, $1.50. For hamfest Information or advance tickets, send check or money order (SASE appreciated) to Bob Hayes, 18931 Cedar Ave., Country Club Hills, Illinois 60477.

ROCHESTER MN
AUG 18-20

The Central States VHF Society will hold its twelfth annual conference on August 18, 19, and 20, 1978, at the Midway Motor Lodge, Rochester MN. This conference is specifically oriented to operation above 50 MHz. An excellent technical program is planned. A dinner for the conferees and their families, an evening speaker, and prizes are included in the program. For further information, contact the Central States VHF Society, c/o Mr. Mel Larson, 2429 N.W. Viking Court, Rochester MN 55901.

Ham Help

I'm looking for a Heathkit TS-4 TV alignment generator schematic, alignment instructions, voltage chart, and circuit operation description.

Bill Mollenhauer N2FZ
Box 3 RD1
Glassboro NJ 08028

I would like to contact anyone who has successfully converted a Sears SSB CB, model 934 36771 500, to 10 meters.

Robin D. Huckaby WB4GKI
2855 Green Valley Rd.
Snellville GA 30278

propagation

by
J. H. Nelson

EASTERN UNITED STATES TO:

GMT:	00	02	04	06	08	10	12	14	16	18	20	22
ALASKA	14	14	7A	7	7	7	7	14	14	14	14	14
ARGENTINA	14	14	14	7	7	7	14	14	14	14	14A	14A
AUSTRALIA	14	14	7A	7	7	7	7	7	7	7	14	14
CANAL ZONE	14	14	7A	7	7	7	7A	14	14	14	14	14A
ENGLAND	14	7A	7	7	7	7	14	14	14	14A	14A	14
HAWAII	14	14	7A	7	7	7	7	7	14	14	14	14
INDIA	14	7A	7B	7B	7B	7B	14	14	14	14	14	14
JAPAN	14	14	7A	7	7	7	7	7	7A	14	14	14
MEXICO	14	14	7A	7	7	7	7	14	14	14	14	14
PHILIPPINES	14	14	7B	7B	7B	7B	7B	7	7A	14	14	14
PUERTO RICO	14	7A	7	7	7	7	7	14	14	14	14	14
SOUTH AFRICA	7B	7	3A	7	7B	14	14	14	14A	14A	14B	7B
U. S. S. R.	14	7A	7	7	7	7	14	14	14	14	14	14
WEST COAST	14	14	7A	7	7	7	7	14	14	14	14	14

CENTRAL UNITED STATES TO:

GMT:	00	02	04	06	08	10	12	14	16	18	20	22
ALASKA	14	14	7A	7	7	7	7	14	14	14	14	14
ARGENTINA	14	14	14	7A	7	7	7A	14	14	14	14A	14A
AUSTRALIA	14	14	14	7A	7	7	7	7	7	7	14	14
CANAL ZONE	14A	14	14	7	7	7	14	14	14	14	14	14A
ENGLAND	14	7A	7	7	7	7	7	14	14	14	14	14
HAWAII	14	14	14	7A	7	7	7	7	14	14	14	14
INDIA	14	7A	7B	7B	7B	7B	7B	7A	14	14	14	14
JAPAN	14	14	7A	7	7	7	7	7	7A	14	14	14
MEXICO	14	14	7	7	7	7	7	7	7A	14	14	14
PHILIPPINES	14	14	7B	7B	7B	7B	7	7	7A	14	14	14
PUERTO RICO	14	14	7A	7	7	7	7A	14	14	14	14	14
SOUTH AFRICA	7B	7	3A	7	7B	7B	14	14	14	14	14B	7B
U. S. S. R.	14	14	7A	7	7	7	7	14	14	14	14	14

WESTERN UNITED STATES TO:

GMT:	00	02	04	06	08	10	12	14	16	18	20	22
ALASKA	14	14	7A	7	7	7	7	7	7	7A	7A	14
ARGENTINA	14A	14	14	7A	7	7	7	14	14	14	14	14A
AUSTRALIA	14	21	21	14	14	7	7	7	7	7	14	14
CANAL ZONE	14	14	7A	7	7	7	7	14	14	14	14	14
ENGLAND	14	7A	7	7	7	7	7	14	14	14	14	14
HAWAII	14	14	14A	14	14	7	7	7	7A	14	14	14
INDIA	14	14	14	7B	7B	7B	7B	7A	14	14	14	14
JAPAN	14	14	14	7A	7	7	7	7	7A	14	14	14
MEXICO	14	14	7A	7	7	7	7	14	14	14	14	14
PHILIPPINES	14	14	14	14	7B	7B	7	7	7A	14	14	14
PUERTO RICO	14	14	7A	7	7	7	7	14	14	14	14	14
SOUTH AFRICA	7	7	3A	7	7B	7B	7B	14	14	14	14B	7B
U. S. S. R.	14	14	7A	7	7	7	7	14	14	14	14	14
EAST COAST	14	14	7A	7	7	7	7	14	14	14	14	14

A = Next higher frequency may also be useful
B = Difficult circuit this period
F = Fair
G = Good
P = Poor
SF = Solar Flares

july

sun	mon	tue	wed	thu	fri	sat
						1 G
2 G	3 G	4 G	5 G	6 F/SF	7 F/SF	8 F/SF
9 P/SF	10 P/SF	11 F	12 G	13 G	14 G	15 G
16 F	17 F	18 G	19 G	20 G	21 G	22 G
23 G / 30 G	24 G / 31 G	25 G	26 G	27 F	28 F	29 G

August 1978 $2.00

73 Magazine for Radio Amateurs

W2NSD/1 NEVER SAY DIE

editorial by Wayne Green

ARMA GETS MOVING

One of the main features of the Atlanta Hamfestival this year was a meeting of the Amateur Radio Manufacturer's Association (ARMA). The main subject of the meeting was a report of the results of my visit a few days earlier to the ITU in Geneva. I went there to find out what the feeling was of the amateurs at the ITU as far as prospects for the continuation of the amateur radio allocations which might result from WARC next year.

U.S. amateurs seem to be optimistic, mostly as the result of the report of the actions of the WARC preliminary conference within our own country. The news that the U.S. position asks for several new ham bands in the shortwave bands is encouraging, until you have some input as to the actual chances of such a theory coming off.

My report to ARMA was that I was unable to find any cause for optimism at Geneva. The recent actions of the ITU have been to express the solidity of the Black Block, a 44-vote African steamroller which has so far wiped out all the amateur satellite frequency allocations above 450 MHz (a loss of 237,249 MHz in the amateur allocation) and made hash of the marine band allocation, defying all technical and scientific advice in the process.

In general, the African feeling is this: 10 percent of the people of the world grabbed 90 percent of the frequencies at the 1947 WARC, they prevented any changes being made at the next WARC in 1959, they prevented any WARC at all in 1969, and now, in 1979, the chickens all come home to roost and the Africans are set to really get even.

Amateur radio is of incredible value to these countries—we know that, but they don't. They think of ham radio as a white man's hobby, and they have some pretty negative feelings about the whole matter. My proposal for ARMA is to organize a drive to fund a mission to go to some of these black countries to see if it might be possible to get them to give the Jordon scheme a try. In 1970, despite a very brisk civil war in Jordon, ham club stations were set up in every youth club in the country and classes were run to teach amateur radio theory and code. Within three years, they had active ham stations going everywhere and over 500 licensed amateurs. Within just three years, Jordon went from having no technicians to having a large number, enough so that they could consider setting up an electronics manufacturing facility.

Also heard was a testimony from Noel Eaton, the president of IARU, the ARRL's international arm. Noel was asked to explain what the ARRL and their IARU had done to prevent a situation such as had taken place in 1971 when we lost the satellite microwave ham bands. He said that IARU had worked only in those countries where they had member societies, a fact which was dismaying since there are no amateur societies possible in countries where amateur radio is virtually undeveloped, and these are the countries with the votes which we need so badly next year at Geneva. ARMA will be asking everyone—manufacturers, dealers, and individual hams—to contribute to a fund to send a mission to some of these Black Block countries and make the effort to try and get them interested for their own benefit in developing amateur radio and in supporting it next year at Geneva. The amount of money needed is insignificant really, \$10 to \$20 per week for a period of three months for every firm in the field, plus donations from amateurs who care enough to try to preserve amateur radio. By mid-July, it should have been apparent if amateurs and the ham industries are supporting this *emergency* plan. There is very little time left to try to influence the WARC decision, so if we are unable to get this going immediately, it'll be too late.

BRAVO FOR FRED

Fred Goldstein, who was one of our editors a couple years back, has some good ideas for those of you with pioneering blood still left unclotted. His article two years ago, "AM Is Not Dead, It Never Existed At All," upset a lot of old-timers. His current article may just do the same to sidewinders. Is it really possible that double sideband may be more band conservative than single sideband? How can a 6 kHz wide signal conserve more band than a 2.7 kHz signal?

Fred doesn't go into this aspect of the situation, but G.E. brought it up back in the '50s when they were trying to get DSB accepted by the military over SSB. Frankly, as I've written several times down through the years, I think G.E. may have had the better system and that Collins outfoxed them politically when they laid Collins

73 Magazine is published monthly by 73, Inc., Peterborough NH 03458. Subscription rates in the U.S. and Canada are \$15 for one year, \$26 for two years, and \$36 for three years. Outside the U.S. and Canada, write for rates. Second class postage paid at Peterborough NH 03458 and at additional mailing offices. Publication No. 700420. Phone: 603-924-3873. INCLUDE OLD ADDRESS AND ZIP CODE WITH ADDRESS CHANGE NOTIFICATION. Microfilm edition—University Microfilm, Ann Arbor MI 48106.

ham gear on the top brass of the SAC. I sure wish someone who was on the inside of that intrigue would spill the beans in an article.

From my vantage point, it appeared as if Mort Kahn W2KR and Don Merten K2AAA (hmmm, what was Don's *real* call? I think it was W2UOL) had a deal with Art Collins WØCXX to get SSB accepted by the Air Force. Mort, who had sold out his Temco (transmitter manufacture) interests to Otis Elevator for a few megabucks, had the clout to pull it off. They all got after General Curtis LeMay, the head of SAC, and General Griswold, his second in command (both hams), to try out the Collins sideband gear on SAC planes.

The results were fantastic as compared with the old AM rigs, so SAC went SSB, dragging the Air Force and then the other sevices with them. Hams of the '50s will remember the hamming-around-the-world flights on SAC planes with Mort, Don, LeMay, Griswold, or even a high FCC official operating. I talked to 'em all many times.

While Collins was putting on the demonstrations from SAC planes, with extra ham stations set up for LeMay in his office, his car, his boat, his home, etc. (I may have been a bit more generous than Collins, but that was the way I heard it at the time), General Electric, with an obviously superior communications system, waited around for the military to find out about it. They never did. Call it lobbying, call it salesmanship—SSB won out totally.

G.E. was, as Fred hints, before their time. Their system of synchronous detection was good, but it was too complicated for those days. The changing of the transmitter for double sideband was duck soup, but the detector for the receiver was horrendous, requiring about twenty tubes for any decent performance. Today this would require one inexpensive IC. That's progress.

Okay, you want to know how it is possible for a 6 kHz wide signal to conserve radio spectrum better than a 2.7 kHz signal, right? The number of signals you can tune in successfully in a given band is the critical number, not how wide each signal is. With synchronous detection, we pass signals which appear on both sidebands, but reject those which appear on only one. Thus you can have two DSB signals only a few Hz apart and you will be able to tune each one in with minimal interference, while SSB signals must be 2.7 kHz apart, at the least.

We won't know exactly how close together and what variations in signal strength we can handle until experiments have been made using modern components. We do know that we can handle about 55 SSB channels within the amateur 20m phone band (150 kHz width). The tests of the '50s, using tube-type detectors, indicated that we could pack almost ten times that number of stations in the same band at one time using DSB.

Before putting Collins or the Air Force down, remember that the Air Force needs to get signals through from their bases to their planes. They are not fighting interference from other stations as hams are, so all they need is the ability to copy weak signals through noise. As far as that is concerned, there is probably little difference between SSB and DSB. The military acceptance of SSB got several firms into production of this type of equipment, so DSB experimenting fell by the wayside.

Perhaps it is time for amateurs to pick up the ball again and get into experimenting with DSB . . . it could hold more promise for alleviating interference on our bands than any other development, and it's been with us for over twenty years.

APRIL WINNER

Since more readers used their Reader Service card ballots to vote for his article than to vote for any other, L.A. Erwin, Jr. WA4FDE of Lyman SC has been named April's "Most Popular Article" award winner. A check for $100 has been sent to him for "How Sunspots Work."

Corrections

I would like to note one error in my article ("The Invisible All-band Antenna," June, 1978)—the captions of the photographs on page **93** are reversed.

Gary H. Toncre WA4FYZ
Miami FL

We goofed. We overlooked one major and two minor errors in the proofs for our article, "Another Ten Minute Timer?", in the May, 1978, issue. We can only plead lack of experience in correcting proofs.

Here are the corrections:

1) In the schematic, the collector of Q1 should be connected through C3 to the base of Q2. It should not be connected to the emitter of Q2.

2) *All* the solder pads that seem to be isolated are part of the ground circuit. They should all be connected by a grounding foil going around the circuit board.

3) Cut the foil between the emitter and base of Q2 (the little transistor).

We sincerely apologize for any inconvenience caused by these errors. Thanks to N4NN for bringing them to our attention. We promise to be more careful next time (experience is a great teacher!).

David Boyd K9MX
Waukegan IL
Max Boyd N9MX
Collinsville IL

Things look quite different in print! My article in the June issue on page 118 ("Enjoy All Bands With A Remote Tuner") contains an error. I reference the use of two step-down transformers back to back, to keep the 120 ac off the tower. This is wrong. What I meant was that the *control cable* has only the 24 V ac and not the primary (line) 120 ac. Of course, the 120-volt side of the transformer *does put 120 ac on the tower.* But it's inside the remote tuner where proper insulation, etc., can be used. I thought it important to make this point clear as a safety measure.

H. M. Rosenthal KL7AE
Anchorage AK

Ham Help

I am stationed in the United Kingdom and need a 1700 Hz tone to key 2m repeaters. I would like to get in touch with anyone who has installed one on a Tempo VHF/One Plus.

Charles Moore WD5DXX
10TRW Box 935
APO NY 09238

I have a stock ARC-2/RT-91 receiver-transmitter. The last article I read in connection with the ARC-2 was from Roy Pofenberg, on its conversion, in October, 1962. I need more information: proper operation (procedural type), and dos and don'ts. I would appreciate a copy of the military "operation & maintenance" manual (will pay for expenses). All ARC-2 owners are welcome to write in and share typical problems and solutions with me.

H. Koutsoupakis
34 24 29 Street B.
Astoria NY 11106

I need a schematic/manual or any information on the Elmac PMR-6A receiver. I will buy or copy and return.

John Barclay WD8BPI
1115 Talley Ave.
Zanesville OH 43701

I need an rf coil K38816-1 for a Hammarlund HQ-100 receiver.

R. E. Vail WB2NZQ
56 Ridgewood Ave.
Yonkers NY 10704

I'd like to get a 100-kHz crystal calibrator, model HA-7, for a Hallicrafters four-band communications receiver, model SX-122, any condition. Could somebody help me?

Paul Tremblay
8 Westfield St.
Biddeford ME 04005

Around the 25th of March, I was able to get into Minneapolis for the first time since last year. You see, I'm disabled, thanks to a stroke. When I was in town, I saw your magazine for the first time and I bought the April issue. When I got to page 164 (about the dial telephone), I almost passed out.

Although I'm trying to get my Novice ticket, when I saw this article, I had hope that one of my problems would be solved. Sadly, the right side of my body is partly paralyzed, and it is hard for me to coordinate my right arm to dial a telephone number. The solution? Push-buttons!

I wrote to every company listed in your article, and as of this day, I have all the parts except one: I need just one of those 4.7 mH (or 5 mH) Inductors that's between 2 of the ICs. Per your article, I wrote to the Cramer Company in Newton, Mass., and they refused to sell me one. I have not yet found anyone else who has a substitute.

Please! Can anyone help?

Ronald C. Peterson
Route 1, Box 151
Clear Lake MN 55319

Help!

I have just gotten my General ticket and purchased a reconditioned Heath HW-12 transceiver. To my dismay, I was unable to get an operator's manual or schematic. If any of you hams could help me, I would be grateful. Please inform me of the cost involved and your address or send them to me with a bill. Thanks.

Kenneth R. Scott WD4OYO
Rt. 1, Box 317
Princeton NC 27569
(919)-689-2306

LETTERS

UP YOUR NOSE

Letter to the Editor, *QST*

We have read much of the literature regarding ham radio and have received the impression that hams are supposed to be helpful, friendly, courteous, and kind. We are supposed to say nice things over the air so that others who are listening might get a favorable impression about our hobby.

We believe that when it comes to Richard L. Baldwin W1RU, editor of *QST* and General Manager of the American Radio Relay League, it becomes a case of do what I say, not as I do.

We refer to an unfortunate incident where Mr. Baldwin told a feeble joke at the Annual ARRL Convention Banquet (N.Y. State) held during the Rochester NY Hamfest. The butt of this joke was Wayne Green, the publisher of a rival magazine, *73*.

It was a bad joke told in bad taste, and we believe that Mr. Baldwin told it to impress some of the officers of the ARRL who were present in the room. The real kicker, sports fans, was the fact that Mr. Wayne Green was not there to defend himself.

Mr. Baldwin W1RU, may the ghost of Hiram Percy Maxim fly up your nose.

Lee **Grills WB2ZHD**
Wayne King N2WK
Jim See WB2JON
Geneseo NY

INSENSITIVITY

I felt compelled to respond to Hans J. Miller's letter in the June, 1978, issue of *73* and share my ARRL experience with him. Unfortunately, Hans, Wayne is correct about the insensitivity of the ARRL to the individual amateur's plight. In response to your comment about ousting officials via elections, you have my sincere sympathy and good luck.

In the two years of my hamming career, I have had occasion to write the ARRL three times—twice to obtain a source of reference material for a project I was working on, and just recently to contest the election of a vice director who I feel is engaging in some rather questionable operating practices not representative of his office.

The ARRL response to both of my technical inquiries was identical. They stated that there was a shortage of personnel and that they could not provide individual designs for every amateur that wrote in. Now you tell me how a request for a source of reference material gets turned into a request for an individual design. I can understand one request being misunderstood, but not two.

My letters to Richard Baldwin and Harry Dannals concerning the vice director problem got an even better response. Mr. Dannals did not even acknowledge my letter. Mr. Baldwin sent me a reply which essentially passed the buck to the director. The director never responded, nor did the vice director. At this point, I am undecided whether or not to pursue the problem.

The only time I have been able to break the snowstorm at HQ involved the use of the telephone. I had about a 20-minute QSO with Doug DeMaw that was very informative and enjoyable. Your ideas about what the ARRL should be are very laudable and I wish you luck in your dealings with HQ. From my own experience, however, I cannot paint a very rosy picture. Mine is only one man's opinion, but perhaps others will feel interested enough to comment.

Richard P. Markey, Jr. WB3CFG
Lebanon PA

TESTING

Regarding "Naive Ideas" (June, 1978), particularly, ham exams and the FCC:

I feel that it would be counterproductive to put the entire licensing system into the hands of the various ham clubs. I wouldn't be concerned about the *competent* applicant passing the tests under such a setup, but I would be concerned about the number of cronies who would also end up with licenses.

It brings to mind my experience (years ago) as a Boy Scout leader confronted with the offspring of various local poobahs who ended up loaded with merit badges, reflecting more badge than merit.

I agree that many clubs are making a commendable contribution by aggressive and excellent training programs. To award them complete licensing power would, in effect, provide the temptation for the club to evaluate its own programs, and confirm that, yes, they certainly are excellent.

Personally, I could see merit in authorizing *qualified* clubs to administer and certify tests for all grades except Extra, with the certified results forwarded to FCC for review and license issuance. I think the Extra class license should continue to require appearance before an FCC examiner. I also feel that an applicant for any grade where club-administered tests were admissible should have the option of taking the test before the FCC if desired—not all hams are "joiners."

Whatever its faults, the system of FCC-administered tests has the advantage of a dispassionate and impersonal treatment of the applicant. I intend to have an Extra class license some day, and would like to feel that I was qualified and competent enough to pass the exam before the FCC.

Just to be sure that I have your attention, I might suggest that the intermediate grade license tests, administered by the *authorized* club, could be routed through the ARRL for certification of the club's qualifications, before license issuance.

W.W. Parker WA6BDP
Laguna Niguel CA

FREE TANIA!

Last time I heard you, Wayne, was on KMOX one night when Jim White had Jack Anderson there, answering his little jewel of an article about the amateur bands that should be given up to CBers. But you have talked to Bob Heil, our club president, more often, I'm sure. He has a fine radio club in Marissa. I wish the Egyptian Radio Club were more like the Marissa club. There's no discrimination in Marissa.

Not so with the Egyptian Radio Club. I'm a woman with an Extra class license, and wanted to support their repeater simply because I talk to so many very nice gentlemen on it that I felt I was "freeloading" and wanted to join to financially support it.

My best buddy and I put our applications in. A paper was circulated telling the members to vote against us because we were women, and no other reason. So I asked several members if it was a men's club. They said no. Now, I'm no women's libber, and I will never join the Boy Scouts or a men's club, but we were assured that it was all right, this was a radio club. Yet I withdrew my application by certified letter and asked for my money ($39.00) back. Bernice Tielemann left hers in, only to be voted out by 2 votes, for no other reason than that she was a woman.

I got an anonymous letter saying I should withdraw (after I had already done so) and not attend the meeting solely because I was a female, and you can see a photostat of the letter if you want to. Then, when I got on that frequency (a supposedly open repeater), these few people put carriers on me until I had to quit, just because I'm a woman.

It's not the whole club, Wayne, just a few within it. And it's supposedly not a men's club. Can they rightfully do this to Bernice and me? What can we do about it?

Tania Miller WB9TKC
Freeburg IL

HOSSTRADIN'

Thank you for the publicity help you gave the Hosstraders Fifth Annual Tailgate Swapfest (May 13 at Deerfield NH) in your "Social Events" column. We doubled our last year's attendance and netted $1140.50 which we gave to the Boston Burns Center of the Shriners' Hospital for Crippled Children.

Your subscription contributions were very much appreciated. K1PJ got the *Kilobaud* sub and K1JGO will be reading *73* for the next year, at least.

Norman Blake WA1IVB
Cornish ME

ATLAS AMEN

I want to add my amen to WA5TUM's letter printed in your May issue regarding the service given to Atlas customers by that Oceanside manufacturer.

A couple of months ago, I purchased a used Atlas 210 from a local dealer. The rig was certified by the dealer's service department as "OK."

Imagine my dismay when I got it home and found it wouldn't work at all. However, the next day I had a business obligation down in San Diego so I stopped by Atlas in Oceanside on the way down.

Clint Call W6OFT graciously listened to my story and told me to stop by on my way back to Los Angeles that afternoon. I arrived in Oceanside about 2:30 and called Clint. He told me "everything" was wrong with

the 210, and that they were still working on it. Could I stay in Oceanside till 4:30, which is Atlas' closing time? I could.

I got to the Atlas plant at quarter after four, and Clint said his technician was still working on it. 4:30 came and went. Clint told me the technician would stay and work overtime to get the rig fixed.

At about 5, the technician, whose name I didn't get, handed me the 210. He said he had everything fixed except for improving the sensitivity on the ten meter band, but figured I would rather have it almost completely fixed than leave it over, since he knew how frustrating it was to have a new rig and not be able to get on the air with it immediately. He also told me that the next time I was visiting Oceanside Atlas would complete the work.

There was never a mention of money. Strictly no charge.

Guess what brand of radio I'll buy when I get ready to buy a new one?

Larry Forbes AA6US
Los Angeles CA

3A2FB

No one epitomized the true ham spirit more than Raymond De Vos 3A2FB. Always ready to help his fellow amateurs, Raymond extended his hospitality upon our first meeting in 1973 and I came to think of him as a friend and advisor.

He assisted me in obtaining my Monagasque license and helped in countless ways to make my visits to that tiny principality more interesting and enjoyable. A true gentleman, Raymond always found the time to make you feel at home and to make each stay, short or long, one to remember with added fondness because of his kindness and courtesy.

Thus the recent death of Raymond De Vos leaves me and all of his many friends much poorer for his passing. 3A2FB is now silent but never to be forgotten.

Morgan W. Godwin
W4WFL/3A0JE
West Peterborough NH

PRESTO!

For years I had been telling myself to upgrade, as I've been a Tech since 1970. Actually, VHF is my bag in ham radio and I enjoy 6N2 SSB/CW and some FM. But still, I "just had to do it!" Well, I spent much time on 40 and 15 CW working on my code speed, but I was suffering from the old 10 wpm hump, as I learned the code in the '60s "the old way." Well, down to the local radio store, and for a slim $4.95, presto, a *73* 13+ wpm code tape! Then into the closet to insult myself hour after hour! "Boy," I said to myself, "you are dumb," but before I knew it, WOW! I was actually copying that stuff! 5 days after the tape was purchased, I attacked the FCC office and one hour later I was (am) an Advanced ticketholder! I would say I spent about 12 to 15 hours with the tape, and as the instructions said, the FCC test was so slow that I almost fell asleep between words! Well, not actually, due to the case of nerves I had! But the overtraining of the 13+ tape is just what I needed!

Many thanks to the *73* code tape system and I highly recommend it to all.

William R. Shaw WA4MMP
Coronado CA

ECARS

ECARS is going full steam ahead. Now that propagation is almost back to "normal" with short skip on 7 MHz, the East Coast Amateur Radio Service (ECARS) is alive and well on 7255 all day every day. The officers and members invite any ARS with or without traffic to join us. For those who are not familiar with the net, ECARS Is a service net (main purpose is to conserve frequency space) where one can make contact and move off frequency. We do give priority to mobiles. You can usually find someone to rag chew and discuss your favorite interest, e.g., photography, chess, gardening, fishing, camping, and/or phone patching to a friend or relative. ECARS is a great place to meet your sked. Please join us on 7255. Membership is not required to participate on ECARS. We welcome one and all—the more the merrier. Please write to K3FEC for additional info, at 10103 Ashwood Dr., Kensington MD 20795. An SASE, please.

David L. Byer W3LMP
Silver Spring MD

LONGING FOR LORAN

Just a very short note to let you know that I was most impressed with two articles in the April and May issues of *73*.

Both issues contained articles by Ralph Burhans, a nonham looking for a place in which to publish a related but not direct electronics application. Your publication has long been known as one in which such efforts can be rewarded.

Ralph and I have been on the phone this morning taking care of a number of details on this item and we find a great deal of identification here in the loran-C subject. Further, I have some idea that there is far more interest than he has experienced in Ohio and on the east coast.

It would appear then that I would like to see Ralph considered for further publication of ioran-C information. As you know, some of us who teach engineering often are considered very theoretical—but things are changing and many of us remember the technicians from which we came.

Your considering further publication of items such as these and those by other experimenters in the VLFs would be most interesting.

Cliff Buttschardt
W6HDO/K7RR
Los Osos CA

GRIPING

I am writing in response to several statements in the May issue of *73*.

In the Letters section, WB4MQD fears spending a lot of money "... for such a small system" (meaning the KIM). The KIM is now a system to grow with. Most hams I know want to get started with a minimal financial outlay. Working on such a simple level is the key to understanding more about computers; playing "Star Trek" all day is not. When one feels ready to expand, memory is easily added. Tom Pittman's Tiny BASIC costs a meager $5 and fits in about 2K. The road goes on... TTY, more RAM, EPROM, Assembler, Standard BASIC, Floppy disks... you get the picture.

Oh, yes. Wayne Green made a mistake. Forethought Products, Inc., makes a KIM-to-S-100 adapter. It retails for $125. While on the subject, I would like to destroy an old myth. That myth is that "if it's not S-100, it's not any good." Baloney. Sure, any product suffers without the excellent hardware support given to the S-100 bus. But that's no reason to knock it down. For instance, the Digital Group even makes a voice I/O board for their system. Enterprising hobbyists have given two-way Morse capabilities, and RTTY, too, to KIM. So, non-S-100 systems still have a lot to offer.

Thanks for letting me gripe.

Barry Polley
Dallas TX

WHITHER SIMPLEX?

After driving nearly 1800 miles this past week with 2 meter FM along, I have one question: Where has simplex operation gone?

In some areas, repeaters are abundant and used consistently, but go to 146.52 or .94 or .76 and give a general call—nothing. In the more remote areas, those out of reach of repeaters, the same thing—nothing.

Yes, I realize there may be no one with 2m capability near, but after driving nearly 800 miles, giving out calls every ten to 15 minutes and still nothing, I began to wonder. I sure did meet quite a few cars, but no hams on 2m FM? There were a few contacts, even one with an aeronautical mobile, but most only after moving off a repeater.

Come on, try simplex; it's fun and more personal, without the constant breakers who sometimes inhabit repeaters.

Thanks to all who helped pass those many miles on 2m simplex.

Chuck Gasaway WA7CPT
Klamath Falls OR

Ham Help

I am writing to thank you for publishing my letter in the February issue of *73*.

As a result, we had many kind letters offering us hospitality in all parts of the states. We were only able to visit a few people on our short trip, but they made us most welcome and really showed us something of the country, taking us to places we would never have found on our own.

We are now looking forward to next year when they will be visiting us. Thanks to your magazine, we have found some very good friends and experienced a marvelous holiday.

Pat Stott
Ovingham, England

I'm trying to get into amateur radio and need a push. I hear people talking on the Table Mountain repeater on my 8-band radio and it sounds like they are amateurs who could help me in this area.

David L. Burrows
PO Box 198
Wrightwood CA 92397

I am in need of an operation and maintenance manual for a Hallicrafters general coverage receiver Model S-108. An original would be nice, but I would accept a good copy at a reasonable cost.

Daryl L. Borgman WB1DXN
RFD 1, Buck St.
Pembroke NH 03275

RTTY Loop

Marc I. Leavey, M.D. WA3AJR
4006 Winlee Road
Randallstown MD 21133

This month we will discuss bias and other forms of distortion. No, I don't mean civil rights; what I am talking about are various forms of ailments that are peculiar to RTTY.

A while back, I mentioned "bias distortion" and deferred explaining it to a future column. Well, welcome to the future! As you may remember, RTTY is sent as 22 msec pulses, five in a row, followed by a 31 msec space (stop) pulse. Now, what would happen if the doo-hickey that initiated a mark, be it relay, tube, or solid state, was a tad sluggish in responding to the TTY signal? Fig. 1(a) shows such a situation, known as *spacing* bias distortion. Note that it lengthens the space interval. Similarly, if the mark initiation is too swift, *marking* bias distortion is produced, lengthening the mark. This is graphically illustrated in Fig. 1(b). But, you might ask, how does such a thing occur? The easiest way to understand it is by envisioning a polar relay. Recall that a polar relay, unlike a "regular" relay, has no spring to return the armature to neutral. Rather, it uses two sets of electromagnets to switch from mark to space. If the armature is not perfectly centered, slightly more force will be required to pull the armature to one side than the other, thereby delaying the initiation of that pulse. Okay, you interject, but I don't use a polar relay! Why should I worry? You should worry because all is not square waves in the world of TTY. Fig. 2 shows my point. Although you think of the TTY pulse as square waves, in point of fact they are anything but. Filtering and inherent capacitance smooth the abrupt transitions to produce the waveshapes illustrated here. If the "turn-on" and "turn-off" points are as shown, it can be seen that mark will start late and be prolonged. A similar situation can be envisioned for space.

Through all of this, we have been dealing with bias distortion, which affects the space-to-mark transition. A similar form of distortion affects the mark-to-space transition, called *end distortion*. A delay in this transition would prolong the mark and is called *marking* end distortion. Premature transition truncates the mark to produce a long space and is called *spacing* end distortion. Fig. 3 illustrates these entities.

The bias distortions described above affect individual marks and spaces in such a way that the entire character length is not affected. But, what if the motor powering the TTY (or the oscillator clock in a solid state terminal) was a tad off? In this instance, the entire character would be sent a trifle fast or slow. Although the relationship of all elements would be preserved, their absolute values would change.

By this point, realizing all that can go wrong with a TTY signal, it may seem amazing that the darned thing works at all! But several features of the TTY design aid in correcting all but the most severe of distortions.

First of all, remember that RTTY is a start-stop code. That 31 msec stop pulse is not just cosmetic, it really *does* something! While it looks as though the TTY machine prints continuously, it really *stops* for an instant during each stop pulse. The machine would be just as happy with a one-pulse-length 22 msec stop. In fact, early Western Union machines used just that format, and were called "65 speed" to reflect the slight acceleration from "60 speed." But, by enforcing a mandatory rest after each character, the machine is able to compensate for character-to-character timing errors and keep them from accumulating. Working in conjunction with this is the range selector, which we explored briefly while considering the computer program to receive RTTY. The machine does not decode the entire data pulse, but only a small window. Thus, if the pulses are shortened by spacing end distortion or a slightly fast machine, advancing the window to early in the pulse interval will produce good copy. Similarly, spacing bias shortened pulses, or a slow motor, can be corrected, to a point, by retarding the range selector.

The proper technique to use to adjust the range selector starts with a machine speed "RYRY" tape sent on local loop. While receiving such a tape, the range selector is advanced until perfect copy is lost, then retarded to a similar point on the low end. The two limits are averaged, and the range selector set to that mean. For example, if limits of 82 and 26 are obtained, the range selector is set to (82 + 26)/2, or 54.

Another form of distortion rather peculiar to RTTY is called "selective fading." Any one of us has heard a CW signal drop out for a dit or two, then bounce back. What may not be evident, however, is that one signal may fade, and another, less than a kilohertz away, may be unaffected. Since RTTY is really two CW signals separated by less than 900 Hz, it is entirely possible for the mark or space to fade out, all by itself. This is easily demonstrated on a CRT viewing the familiar "cross" RTTY display. While working the rig and observing the pattern, either the mark or space ellipse will frequently disappear independently. An early method of coping with selective fading was through diversity reception. This takes advantage of the fact that just as signals 900 Hz separated might fade independently, so might signals received from stations several hundred meters apart. One amateur application of diversity is found in *QST*, April, 1966. The reason that diversity has not been of recent application is due to the fact that the RTTY signal has redundancy built in. Modern converters are able to use this redundancy to obtain full information from either the mark or space, thus granting a degree of immunity from selective fading.

More on tap for next month. I'm delighted at the response on the computer program and support material, and will try to publish more as it is developed. Keep those questions coming in, and look for *your* name in the RTTY Loop!

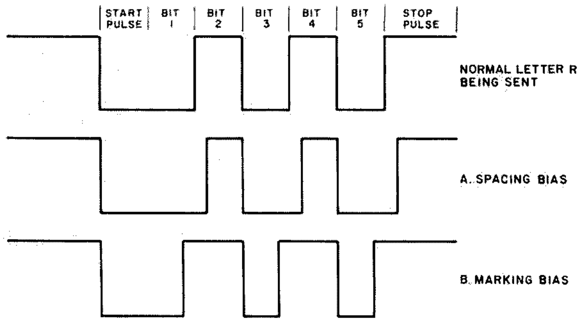

Fig. 1. Bias distortion.

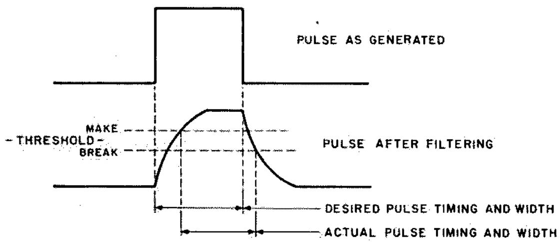

Fig. 2. Origin of distortion.

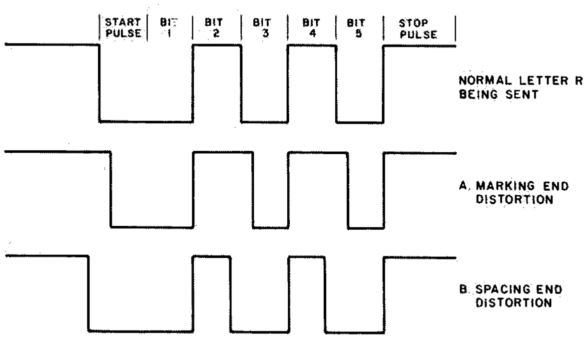

Fig. 3. End distortion.

Editor:
Robert Baker WB2GFE
15 Windsor Dr.
Atco NJ 08004

CONTESTS

8th SARTG WORLDWIDE RTTY CONTEST

Contest Periods:
0000 to 0800 GMT Saturday, August 19
1600 to 2400 GMT Saturday, August 19
0800 to 1600 GMT Sunday, August 20

Sponsored again by the Scandinavian Amateur Radio Teletype Group, classes include single op, multi op-single transmitter, and SWLs. Use all bands 80 to 10 meters, but only two-way RTTY QSOs will count. The same station may be worked once on each band for QSO and multiplier credits.

EXCHANGE:

RST and QSO number.

SCORING:

QSOs with your own country count 5 points, other countries in the same continent count 10 points, and other continents count 15 points. In USA, Canada, and Australia, each call district will be considered as a separate country. Use the DXCC list for all other countries. Note: Contact with a station which would count as a multiplier (country) must be found in at least 5 logs, or contest log from the multiplier station must be received in order to be valid. Final score is the QSO points times the sum of multipliers (countries). SWLs use the same rules for scoring, but based on stations and messages copied!

AWARDS:

To top stations in each class, country, USA, Canadian, and Australian call district.

ENTRIES:

Logs must be received by October 10. The logs should contain: band, date/time in GMT, callsign, exchanges sent/received, points and multipliers. Use a separate sheet for each band and enclose a summary sheet showing the scoring, classification, callsign, name and address. Comments will be very much appreciated. Send logs to: SARTG Contest and Award Mgr., C. J. Jensen OZ2CJ, Meisnersgade 5, 8900 Randers, Denmark.

CAN-AM CONTEST

Contest Periods:
Phone—0000 to 2400 GMT August 19
CW—0000 to 2400 GMT August 20
**** both days for full 24-hour periods!**

The objective of the contest sponsored by the Canadian DX Association is to increase friendship among Canadian and American amateurs and to provide a means of measuring the performance of their operating skills and equipment. Competition categories include: single operator (stations operated by the station licensee), multi-operator/single-transmitter (stations operated by more than one operator or single operator other than the licensee, or club stations), and club competition. All bands 160 through 10 meters are permitted, while it is recommended that you use the US general portion of the bands on phone and CW. The same station can be contacted once on each band and mode. Stations operating from outside their own call area must sign slash and the area they are operating from. Multi-operator stations must stay on the band at least 10 minutes before they can make contact on another band. Phone and CW sections of the contest are considered separate contests. However, combined scores for phone and CW will be used for overall competition.

EXCHANGE:

Signal report plus sequential QSO number starting with 001, plus multiplier area abbreviation, in that order: e.g., 59001NJ or 599 002 NJ. Multiplier area abbreviation is the usual two-letter postal abbreviation for the 50 US states, CN for Caribbean (KC4, KG4, KS4, KV4, KZ5), PC for Pacific (rest of US possessions). Canadians will use: NF—VO1/VO2; NB—VE1 New Brunswick; NS—Nova Scotia; PE—Prince Edward Isl.; SI—Sable and St. Paul Isl.; PQ—VE2; ON—VE3; MB—VE4; SK—VE5; AT—VE6: BC—VE7; NW—VE8 NWT; YU—Yukon.

Multipliers are 50 US states, 2 US possessions (Caribbean, Pacific), 10 Canadian provinces, 2 territories (NWT, Yukon), 1 islands (Sable, St. Paul). Total of 65 multipliers per band; maximum possible on all bands is 390. American to American or Canadian to Canadian QSOs count 2 points per QSO, American to Canadians and vice versa QSOs count 3 points each. The final score is the result of the total QSO points from all bands multiplied by the sum of the multipliers from all bands. Remember that phone and CW are separate contests. Claimed scores will be calculated by the Contest Committee as a result of the addition of phone and CW scores.

AWARDS:

First place certificates will be awarded in each multiplier area on both modes in single-operator category. Top five multi-operator stations will receive certificates for high combined phone and CW scores. All scores will be published in *QST*. Free one year subscriptions to *Long Skip*, the CANADX bulletin, will be awarded to the 5 US stations. Trophies and plaques will be awarded to the overall single-operator combined phone and CW American and Canadian champions as well as multi-op champion combined modes and highest club score. The club award will be based on the 5 best scores on CW made by the club members. A club officer must submit the summary showing the callsigns and scores. Each station is eligible for one trophy only. In a case where one station qualifies for another trophy, the less significant trophy goes to the next eligible station.

ENTRIES:

All times must be kept in GMT in logs submitted. Indicate multipliers the first time only on each band. Log must be checked for duplicate contacts, correct QSO points and multipliers. *Do not use* separate logs for each band. Each entry must consist of: log sheets, summary sheet showing all scoring information, category of competition, operator's name and callsign, address of the station, and signed declaration. Entries

CALENDAR

Aug 19-20	**CAN-AM Contest**
	SARTG Worldwide RTTY Contest
Aug 26-27	**Ohio Interstate QSO Party**
	All Asian CW Contest
Sept 2-4	**Four-Land QSO Party**
Sept 9-10	**Pennsylvania QSO Party**
	ARRL VHF QSO Party
Sept 16-18	**Washington State QSO Party**
	Scandinavian Activity Contest—CW
Sept 23-24	**Scandinavian Activity Contest—SSB**
	Delta QSO Party
Oct 7-9	**QRP QSO Party**
	VK/ZL/Oceania DX Contest—Phone & RTTY
Oct 14-15	**VK/ZL/Oceania DX Contest—CW**
	Nine-Land QSO Party
	ARRL CD Party—CW
Oct 21-22	**ARRL CD Party—Phone**
Oct 28-29	**CQ Worldwide DX—Phone**
Nov 4-5	**ARRL Sweepstakes—CW**
Nov 11	**OK DX Contest**
Nov 11-12	**IPA Contest**
Nov 18-19	**ARRL Sweepstakes—Phone**
Nov 25-26	**CQ Worldwide DX—CW**
Dec 2-3	**ARRL 160 Meter Contest**
	TOPS CW Contest
Dec 9-10	**ARRL 10 Meter Contest**

RESULTS

RESULTS OF THE 1977 TOPS CW CONTEST

YU3TYX	**85,137 points**
HA8UB	**82,544**
OK2BNR	**80,115**

Of the 203 entries submitted, only 2 were from the US, with K4TQ finishing above N8FU.

with over 200 QSOs must include check sheets for each band. Official logs, check sheets, and summary sheets are available from CANADX; a large SASE with Canadian stamps will bring you samples. Violation of national amateur radio regulations or the rules of the contest, unsportsmanlike conduct, taking credit for excessive duplicate contacts, and unverified QSOs or multipliers will be deemed sufficient cause for disqualification. Incorrectly logged calls will be counted as unverifiable contacts. Actions and decisions of the CANADX Contest Committee are official and final. All entries must be postmarked no later than Sept. 30 and mailed to: Canadian DX Assn.—CC, Box 292, Don Mills, Ont., Canada M3C 2S2.

OHIO INTERSTATE QSO PARTY

Contest Periods:
1200 to 2200 EDT both days, August 26 & 27

Sponsored by the Ohio Council of Amateur Radio Clubs and the Farout Amateur Radio Club (Kettering OH). Ohio stations work anyone while others work only Ohio stations. A station may be worked once per band per mode. Multi-multi is not allowed!

EXCHANGE:

Serial QSO number, state, province, or Ohio county.

SCORING:

Ohio stations multiply number of QSOs by number of states and Ohio counties worked. Others multiply number of QSOs by the number of Ohio counties worked.

AWARDS:

Awards for top Ohio score, top out-of-state score, top mobile. Certificates for top entry from each Ohio county and each state/province. Special award for working three or more Farout members.

ENTRIES:

All entries must include a legible log, dupe sheets for each band/mode worked, a list of all multipliers claimed, claimed score, and a statement that all rules were observed. All entries must be postmarked by Sept. 15. Send all entries and an SASE for results to: Frank Stillwell WB8OFR, 5326 Brainard Drive, Kettering OH 45440.

FOUR-LAND QSO PARTY

Starts: 1800 GMT Saturday, September 2
Ends: 0200 GMT Monday, September 4

Sponsored by the Fourth US Call District Amateur Radio Association of the IARS, Inc., to make the many counties in the eight fourth district states available to the contestants.

RESULTS

RESULTS OF THE FIRST 73 SSTV CONTEST

Judging by on-the-air activity during the 73 SSTV contest which was held during early March, 1978, this affair was a rollicking success. Some problems were experienced during this first-time event; however, the entanglements were quickly resolved and everyone reported thoroughly enjoying the contest. Our description of proper log scoring techniques was rather vague, so most of the gang arrived at their final score using different methods. I rectified this situation by re-tallying all logs using a common scoring method.

Many of the contest awards were presented at the Dayton Convention SSTV Forum. The Dayton Amateur Radio Club donated a beautiful plaque which went to this year's winner, Bob King, Jr. WD5GXI. Since "Bob Junior" couldn't attend the Dayton Convention, his father, Bob King, Sr. W5IXK, accepted the plaque for him. I also presented the *73 Magazine* certificates to contest winners at that time. I have now mailed certificates to categorical winners not attending the Dayton Convention, and filed all entries received.

Brooks Kendall W1JKF and I would like to thank all of you for your outstanding support and involvement in this contest. Barring unforeseen circumstances, another U.S.-sponsored contest will be scheduled for next year. However, Brooks and I will definitely do our best to see that everything goes smoother at that time.

Dave Ingram K4TWJ
Associate Editor, 73

Final Scores—73 SSTV Contest 1978

Call		*Total Points*	
WD5GXI	Bob King, Jr.	45,440	Overall Winner, First in U.S.
N6WQ	Roland	18,252	Second in U.S.
WB3APB	William Watt II	17,280	Third in U.S.
W9ET	Jerry Ayers	10,062	Fourth in U.S.
K6SVP	Dick Piety	8,742	Second in California
W3CPR		7,900	Second in Third U.S. District
W6WDL	Bobby Hargis	6,210	Third in California
WAØQIT	Leslie Taylor	5,340	First in WØ District
WB6ZOM	Melvin Gassert	4,940	Second in W6 District
WB9OGS	John Groezmeger	3,916	Second in Ninth U.S. District
K8EMI	Robertson	3,276	First in Eighth U.S. District
K4DLR	Mel Malkove	2,970	First in Fourth U.S. District
KØTW	Thomas Workman	306	First with Lowest Score

WD5GXI, contest winner, and KL7HAE during contest exchange on 20 meters. Camera movement causes slight blurring of picture.

Here's Dick K6SVP "knocking out" the video QSOs during SSTV contest. Dick worked several European stations on 15 meters SSTV with low power.

Contest Comments:

"I was very pleased with the way Slow Scanners conducted themselves on the air, and it was the most fun I've had with amateur radio in a long while. Thank goodness for the magic marker pen and scissors, although my living room looked like a 'paper zoo' after the contest."—Tom W3CPR

"Our first SSTV contest, and it was a blast!"—Harry W2GND

"Busier than a one-armed paperhanger with this contest."—VE3CFR

"I wish we had had a U.S. SSTV Contest sooner."— WA9USE

"Where did all those new calls come from?"—Dave K4TWJ

"Contest was most fun I've had yet on SSTV. Almost fell out of my chair when I worked several European SSTVers 'barefoot'."—Dick K6SVP

"Think I blew my linear."—WB3APB

RESULTS

RESULTS OF THE 8th WORLD TELECOMMUNICATIONS DAY CONTEST

First place team trophies for both phone and CW went to Lithuania, with UP2NK topping the list. Second place team trophies went to France, and third went to Brazil. First place individual gold medals went to UP2NK on phone and EA2IA on CW. Second place silver medals went to HW6ITU for phone and UP2NK on CW. Third place bronze medals went to UR2QI on phone and UP2SA on CW. First place club stations were UK2GKW on phone and UK2BBB on CW. From the USA entries submitted, W2LEJ finished first on phone with W7ULC first on CW.

The same station may be worked on each band and/or mode fixed, and repeated again if operated portable or mobile, and from each different county. Fourth call district stations may work other stations within the 4th call district.

EXCHANGES:

RS(T), county and state for 4th call district, state/province or country for others.

SCORING:

Fourth call district stations score 1 point for W/VE QSOs, 3 points for DX contacts (includes KH6 & KL7). Final score is total points times states plus provinces (counted only once).

All others score 2 points for each QSO times the sum of 4th district states plus 4th district counties. Count each state and each county only once.

FREQUENCIES:

Novices: 3710, 7110, 21110, 28110 (± 10 kHz). Phone: 3940, 7260, 14340, 21360, 28600. CW: 3575, 7060, 14070, 21090, 28090 (± 10 kHz).

AWARDS:

Certificates to top scorers in each state, VE province, and country. Second and third place awards when scores warrant. High Honor Trophy Award certificate to high scorer in four-land; high W/K out of 4-land; VE and DX country. Also county awards to 4th call district states and special awards to the Novices, SLWers, and blind/handicapped.

ENTRIES:

Contestants must mail logs with score within 30 days of the end of the contest to 4th Call District ARA, Attn: Bob Knapp W4OMW, 105 Dupont Circle, Greenville NC 27834. Please include an SASE for a copy of the results.

STATEN ISLAND AWARD

The Staten Island ARA wishes to announce this award available to any amateur who can prove contact with 10 hams on Staten Island. Applicants must submit QSL cards from 10 different stations with return postage for the cards plus $1 to cover the costs of administering the certificate. Send to G. W. Ryan WA2ZPG, 14 Seacrest Avenue, Staten Island NY 10312.

WORKED ALL BRAZIL AWARD (WAB)

The WAB award has been instituted by Liga de Amadores Brasileiros de Radio Emissao (LABRE) to encourage interest in the Brazilian areas. The award is for confirmed contacts with stations in Brasilia, Distrito Federal and the 22 states, and is available to amateurs everywhere in the world. A special ribbon "TBT" shall be attached to the award for confirmed contacts with the 4 Brazilian territories. Confirmations must be forwarded direct to LABRE Headquarters-Awards Manager, PO Box 07/0004 Brasilia DF, Brazil CEP:70000. All applications must be forwarded to the LABRE by registered mail, with 10 IRCs or equivalent for handling postage.

All stations contacted must be regular amateur stations working in the authorized amateur bands or with stations licensed to work amateur bands. All stations must be contacted from the same call areas, where such areas exist, or from the same country in cases where there are no call areas. One exception is allowed to this rule: Where a station is moved from one call area to another, or from one country to another, all contacts must be made from within a radius of 150 miles from the initial location. All contacts must be with "land stations"; contacts with ships, anchored or otherwise, and with aircraft are not allowed. Contacts may be over any period of years, provided only that all contacts be made under the provisions of the above rules and by the same station license; contacts may have been made under different call letters in the same area (of country) if the license for all was the same. All confirmations must be submitted exactly as received from the stations worked. A log checked by the Awards Manager of the applicant's country, or by two licensed amateurs, shall be accepted. Compliance with the determinations of the international conventions, national laws and rules in force, fair play and good sportsmanship in operating are required of all amateurs working for the WAB award. A minimum readability of "3" shall be recorded on each confirmation submitted. The minimum signal tone report of "5" is required for all CW confirmations. Decisions of the LABRE awards divisions regarding interpretation of the rules as here printed or later amended shall be final.

Ham Help

I have a copy of the April issue of *73* and have read the article entitled: "**Danger—Microwave Radiation.**" I also recently read an article in the Oct., 1977, issue of *Consumer Reports* on the subject of CB radios. The concluding paragraph on page 565 states:

> "Note well: CB radios emit electromagnetic waves when used to transmit. Very little is known about the long-term effect of such radiation on human beings. Inside a car, the radiation level was too low for us to measure on our instruments. Outside a car, at a distance of 12 inches from the antenna, we measured a radiation level of three milliwatts per square centimeter. Since the possible effects of this kind of radiation are unknown, prudence dictates that you avoid transmitting while standing outside a car close to the antenna. We would also recommend against mounting an antenna close to the car's windows."

In the *73* article, Mr. Thornburg states in part: "Really, what I am saying is that danger exists at UHF and even VHF frequencies, as well. Don't radiate 100 Watts of UHF less than 5 feet (RNF) from your body.

I recently took the Novice test and expect my license momentarily. I have not purchased any equipment yet because of some questions I have, including the danger of radiation.

I've been told that the Novice bands are considered in the HF range and not as much a hazard as VHF. However, the *Consumer Reports* article speaks of even a lower band with less power.

I live in an apartment building on the top floor near many TV outdoor antennas which may create problems of interference, in addition. Because of landlord restriction, I may have to resort to an indoor random-length antenna, though I'm hoping for a whip antenna outside the window. I am concerned from both a radiation and interference standpoint. A random-length would necessarily have to be wound around the room, and radiation could be a hazard I might not want to risk.

With an indoor antenna, I may need more power, which might be bad both from the radiation and interference standpoints, the latter especially in this densely populated area. My wife has an arrested malignancy which further complicates the situation.

I am looking for a solution to this problem, but have been unable to get any advice thus far. I do not even have any idea of what kind of equipment to buy, whether to buy a used CW-only transceiver or one that can be later upgraded.

I would appreciate any suggestions or recommendations that can be offered. I have no technical background.

Morton Hahn
5000 15 Ave.
Brooklyn NY 11219

I have been a subscriber to *73* for quite a few years and believe it's the best as a ham publication.

I have a request for information which I hope someone can assist me with.

Is there a company or a known individual that can or will custom-design a solid state circuit for a person such as myself for either their own use or for possible future patentable idea/design? I am of the old "tube-type" school. I quit design and application when s/s was beginning, and, try as I will, I just cannot use it. The devices or circuits are not complicated or unusual, but they are beyond my knowledge.

I would appreciate it greatly if someone could advise me as to a company or an individual who could assist me.

J. H. Burgess K4HNW
Route 13, Box 42
Morgan LaFee Lane
Fort Myers FL 33901

FCC

Reprinted from the Federal Register.

AMATEUR RADIO SERVICE

Administration of Operator Examinations

AGENCY: Federal Communications Commission.

ACTION: Final rules.

SUMMARY: The FCC is amending its amateur radio rules to permit the engineers in charge of its various field offices to issue Amateur Code Credit Certificates. Upon presentation of a properly completed certificate, an applicant for an amateur operator license will be given examination credit for the telegraphy speed shown on the certificate. The FCC is acting in response to many complaints that it has no such examination credit program and expects that the issuance of Amateur Code Credit Certificates will relieve both applicants and the FCC of unnecessary work and effort.

EFFECTIVE DATE: June 16, 1978.

ADDRESSES: Federal Communications Commission, 1919 M Street NW., Washington, D.C. 20554.

FOR FURTHER INFORMATION CONTACT:

Mr. Gregory M. Jones, Personal Radio Division, Safety and Special Radio Services Bureau, 202-834-6619 (not a toll-free number).

SUPPLEMENTARY INFORMATION:

Adopted: May 31, 1978.

Released: June 7, 1978.

Order. In the matter of amendment of the FCC's rules concerning the administration of operator examinations in the amateur radio service.

1. The Commission is amending its rules concerning the administration of operator examinations in the amateur radio service.

BACKGROUND

2. Under existing examination procedure, an applicant for an FCC-supervised amateur radio operator license must appear at an FCC field office or designated examining point for examination. Depending on the class of operator license for which the applicant is applying, he must successfully complete certain examination "elements", in accordance with the following schedule (see § 97.23 of the Commission's rules):

Class of Operator License and Required Examination Elements

Amateur Extra—1(C) (20 word per minute telegraphy test); 2 (basic amateur operation); 3 (general amateur practice); 4(A) (intermediate amateur practice); 4(B) (advanced amateur practice).
Advanced—1(B) (13 word per minute telegraphy test), 2, 3, and 4(A).
General—1(B), 2, and 3.
Technician—1(A) (5 word per minute telegraphy test), 2, and 3.
Novice (not administered at FCC field offices)-1(A) and 2.

3. Section 97.25(a) of the rules states that a licensed amateur operator applying for a higher class operator license will be given examination credit for the examination elements included in the examination for the class of operator license he already holds. For example, an applicant for the general class operator license who holds a technician class license at the time of his examination will be given examination credit for examination elements 2 and 3 and need only successfully complete examination element 1(B) to obtain the general class license.

THE PROBLEM

4. It has come to our attention that many amateur licensees are not entirely satisfied with the present rule concerning examination credit in the amateur service. In particular, we have been receiving many informal requests to amend the rules to extend examination credit to an applicant for each examination element he passes, regardless of whether the applicant goes on to complete the entire examination successfully. For example, if an applicant for a general class operator license who holds no amateur license at the time of his general class examination were to pass examination element 1(B) (13 word per minute code test) but fail examination element 3 (general amateur practice), he would be given examination credit for element 1(B) upon reexamination. He would not be required to retake the 13 word per minute telegraphy test, because he would have passed it once already under FCC supervision.

THE SOLUTION

5. We believe there to be no reason to continue to require that an applicant for an amateur operator license retake examination elements he has already completed successfully, and we are by this order amending parts 0, 1, and 97 of the FCC's rules to permit the issuance of Amateur Code Credit Certificates (FCC Form 845) by the engineers in charge of the various FCC field offices. Amateur Code Credit Certificates will be issued to applicants for amateur operator licenses who pass telegraphy examination elements 1(A), 1(B), or 1(C) but who fail the written examination elements associated with the telegraphy examinations. Upon presentation of a properly completed Amateur Code Credit Certificate, an applicant for an amateur operator license will be given credit for the code speed listed on the amateur Code Credit Certificate. Thus, an unlicensed applicant for a general class license who passes examination element 1(B) but who fails examination element 3 will, upon reexamination, be given credit for examination element 1(B). To obtain the general class license the applicant would have to complete only elements 2 and 3. An Amateur Code Credit Certificate will be valid for a period of 1 year from the date of its issuance and must be presented at the field office at which the examination was undertaken.

6. We believe the amendments we are adopting will make it simpler and less tedious for applicants for amateur operator licenses to obtain such licenses. We also believe our service to applicants for amateur operator licenses will improve, because we will not have to administer what are essentially unnecessary telegraphy examinations. (A reduction in the number of examinations we administer is critical, in view of the extremely large number of applicants now seeking to become amateur radio operators.)

CONCLUSION

7. Authority for these amendments appears in sections 4(i), 5(d), and 303 of the Communications Act of 1934, as amended. Because the manner in which amateur radio examinations are conducted is a matter of internal agency procedure, the prior notice and public procedure provisions of the Administrative Procedure Act, 5 U.S.C. 553, are not applicable.

8. Accordingly, the Commission orders that parts 0, 1, and 97 of its rules are amended as set forth below effective June 16, 1978.

(Secs. 4, 5, 303, 48 Stat., as amended, 1066, 1068, 1082 (47 U.S.C. 154, 155, 303).)

FEDERAL COMMUNICATIONS COMMISSION,[1]
WILLIAM J. TRICARICO,
Secretary.

Parts 0, 1, and 97 of Chapter I of Title 47 of the Code of Federal Regulations are amended, as follows:

PART 0—COMMISSION ORGANIZATION

1. In § 0.314, a new paragraph, (w), is added, as follows:

§ 0.314 Additional authority delegated.

* * * * *

(w) To issue Amateur Code Credit Certificates, under the provisions of Part 97 of this chapter.

PART 1—PRACTICE AND PROCEDURE

2. In § 1.922 a new form, FCC Form 845, is added, as follows:

§ 1.922 Forms to be used.

FCC Form and Title

* * * * *

845—Amateur Code Credit Certificate.

* * * * *

PART 97—AMATEUR RADIO SERVICE

3. In § 97.25, paragraphs (b), (c), and (d) are redesignated paragraphs (c), (d), and (e), respectively, and a new paragraph (b) is added, as follows:

§ 97.25 Examination credit.

* * * * *

(b) Upon presentation of a properly completed Amateur Code Credit Certificate, FCC Form 845, the FCC shall give the applicant for an amateur radio operator license examination credit for the code speed listed on the Amateur Code Credit Certificate. An Amateur Code Credit Certificate is valid for a period of 1 year from the date of its issuance and will be honored only at the FCC field office that issued the Amateur Code Credit Certificate.

[1] Commissioners Ferris, Chairman; and Brown absent.

Ham Help

Thanks for publishing my letter in your May issue of *73 Magazine*. It's been a real help. Within a month of its being published, I've received over 20 letters offering help or equipment. But I'd have to say I was helped the most by the Bismarck Amateur Radio Club. I was contacted by one of their members and asked to attend a monthly meeting. After attending this meeting, I've found that amateurs aren't such a bad lot, after all. Their club voted to give me a free one-year membership. By the time you receive this letter, I will probably have already purchased a used Heath Novice station. Again I'd like to thank *73 Magazine* and all the other hams who wrote to me.

Mark Malm WB0YHW
Flasher ND

I recently salvaged a Knight-kit R100a general coverage receiver and a Hickok 195B oscilloscope, and I'm having trouble finding manuals or schematics for either. If anyone can help me out with either of these pieces of equipment, it would be greatly appreciated. I would, of course, reimburse any duplicating or mailing expenses incurred.

John Vercellino WB9OVV
4636 Pershing
Downers Grove IL 60515

I need a copy of the schematic for the old Heathkit VF-1 vfo.

John C. Brown WB4PRF
Box 37
Eva TN 38333

I need operation and maintenance manuals and schematics for the four items below. I am willing to post a deposit for prompt return of documentation. Phone (203)-357-8000, extension 394 if nearby or write address below.

The four items are: Dumont oscillograph, type 241, serial 5255; Dumont oscillograph, type 303-AH1, serial 6812; Central Electronics 20-A SSB exciter; and its traditional vfo, the BC-459 revision. Thanks.

Lloyd Yost K2YJP
70 Mt. Pleasant Ave.
Stratford CT 06497

I am attempting to build a small windmill power plant (portable). I have obtained some small permanent magnet alternators from a local surplus yard. They were made around 1957 to 1960 by the TKM Electric Co. of Rochester, N.Y. Some of them need replacement parts before they will work on my windmill, but alas, TKM has slipped into a dark black hole and fallen out of sight. Does anyone out there know about TKM or anyone who perhaps used to work for TKM? Any info would be greatly appreciated.

Also, anyone who's trying to build a small portable windmill and is interested in exchanging ideas, please contact me; it's free. I've been able to get better than 150 Watts of power at 1500 rpm out of these 8-lb. PM generators!

Rick Christensen
Route 3, Box 630
Provo UT 84601

I would appreciate a frequency curve plot with a schematic diagram utilizing same for the following Collins mechanical filter: type F250-A67, serial 11M2, p/n 526 9039 00.

I wrote Collins Manufacturing Co. but have not received any answers to my requests. Any help would be sincerely appreciated.

George G. Boehle K2IHK
9437 109th Ave.
Ozone Park, L.I., NY 11417

I am in desperate need of the manual, schematic, and manufacturer's address for the CCTV camera model MC-920 manufactured by The Ness Corp., Japan.

Jeffrey K. White WD8OXK
PO Box 767
Athens OH 45701

Looking *West*

Bill Pasternak WA6ITF
24854-C Newhall Ave.
Newhall CA 91321

John Walker WB6MHF has an autopatch system here in Los Angeles, and it's a bit different than most. You see, it's not a repeater. For that matter, it's not even a remote base. John in Los Angeles and another group in San Diego have perfected a very novel radio-to-telephone interlink called a "simplex autopatch." Coordinators, take note! After this gets published, you might have a new entity to worry about finding a home for.

According to John, he first got the idea for his system from reading an article in *73* on just such a concept. He and the members of his group took hold of the idea and refined it into a working system. They then operated it in "test configuration" at John's house for a few months. After "proofing" was complete, it was moved to a mountaintop location. All the experimentation, tests, and work have led to an amateur autopatch that utilizes but one discrete channel. Talk about spectrum conservation! That's one giant step for the ARS!

Want to know how a simplex autopatch works? As I understand it, the heart of this "magic talking box" is not a radio, but rather a KIM-1 microprocessor. The KIM makes it all tick. The processor handles everything from control to system security. The radio portion of the system can be just about anything from an IC-22 or Midland 13-509 to a Motorola MICOR. Virtually anything will work. At all times, the system receiver is listening; in John's case, it listens not only for a carrier but also for certain control tones. Upon having a system user come up on channel and simply ID, a transmitter is activated. When the user lets up the PTT, he then hears the system transmitter come back to him. However, the carrier is not steady. It pulses on and off. The "off" period is the "receive" window," wherein the receiver is looking for another command from "Joe User." So, Joe punches a sequence of numbers on his tone pad, lets go of the PTT button, and, like magic, a dial tone like Ma Bell's is heard. Again, the system is pulsing the receiver and transmitter to provide a "receive window." Each time Joe User keys up, he automatically locks the transmitter off, so now he dials his call as he would on any other autopatch. While conversing with his party, the user will continue to hear the receive window, which sounds like a "tick" or small crackle and is easy to get used to. He carries on his conversation and then functions the thing down. Again, the system reverts to the listen-only mode until such time as it is again needed. Since "primary control" is via another dedicated telephone line and user control is "secondary," it therefore meets all the current FCC criteria. But for what?

Well, it's not a repeater; this we know. Is it then a remote base? Not if you judge it by the normal criteria for that classification of operation. There is but one radio link and that is on a single discrete frequency. In essence, John's system is a whole new ball of wax—a "simplex repeating system"—and that's why I suggested that coordinators take note. With its success in LA and in San Diego, and with the crowded spectrum that many of us are forced to live with, the time is right for this third generation relay device.

During my interview with John, he hinted strongly that if there were enough interest shown, he would be more than happy to write an article for *73* describing in detail how a simplex autopatch works and how one can be built. Therefore, if this concept does tickle your fancy, drop him a note via this column and we will see what can be done. It's up to you!

THE I LOVE A PARADE DEPARTMENT

I wish I had some pictures to go along with this commentary. Actually, I do, but it's kind of hard to publish 1200 or so feet of motion picture film.

Let's go back about twelve years. It was in the spring of 1966 that amateur radio first became a part of a New York City "Big Event." Back then, no one involved could imagine that this "happening" would grow to such an immense size and that amateur radio would come to play such an important part. I can remember sitting at the very first organizational meeting as Andy Feldman WB2FXN, then Assistant EC for Brooklyn AREC, explained the part that we would play in the third annual Salute to Israel Parade up New York's famed Fifth Avenue.

In those days, we were all AM on six meters. It was easy to tell the VHF amateurs back then. The CBers were the guys with the whips, and the six meterites were the nuts running around with "basketball hoops" on the backs of their cars. How many of you still remember the Hy-Par Saturn 6 halo? That's what we used at the first Parade with which we were involved. There were halos, squalos (square halos, if you can picture that one), and a lot of Gonset Communicator IIIs. The last Parade I went to was in 1972, just a few months prior to our move to LA. By that time, the event was three times the size it was in '66, and we amateurs were using two meter FM. Our "gain whips" made us look more like the CB crowd than hams.

Last February, I found out that I could get a week's vacation that would correspond with the 1978 Dayton Hamvention. A call from Lou K2VMR informed me that the weekend following Dayton would be the Parade. A call to my friendly travel agent brought word that Delta had a neat money-saving package. That is, if I didn't mind stopping in Atlanta en route to anywhere. The price was right, so why not? We confirmed Dayton and NYC, made some reservations for a hotel and rental cars, and awaited departure day. It was during this waiting period that I made the decision to film the amateur radio activity surrounding the Parade in good old-fashioned movie format rather than in stills.

Departure day arrived. Wayne Green was speaking at Cerritos College, so Al Ogden W6SPK drove me down to Wayne's appearance and then we left for LA International. Well, the rest was a comedy of errors. I never made it to Dayton, but early Monday morning my TWA L-1011 made a textbook landing at JFK International and we began a week of groundwork that we hoped would lead to a successful film. It did, and I am busy these days editing. It should be ready by summer's end. Right now, it's more important to tell the Parade's story.

This year, some 40 amateurs from the New York metropolitan area, aided by a few volunteers from as far away as San Diego, California, managed to provide a communications network for a New York City parade that proved to be one of the biggest in that city's history. Official New York City police figures estimated the number of spectators at over one million, including the guest of honor, Israeli Prime Minister Menachem Begin. The number of marchers was placed at better than 100,000.

What then, you may ask, was the contribution of a mere forty amateurs? Simply this: They held the whole thing together and kept it moving. Without the amateur communications network, a network which this year utilized two repeaters and multiple simplex channels on both two meters and 450 MHz, it would have been impossible for those responsible for the event to know what was happening along the line of march and in the formation areas. It would have been almost impossible to dispatch emergency medical aid when and where it was needed. Suffice it to say that Parade officials credit the communications afforded by amateur radio as being one of the backbones of the march. In fact, one official, the Parade's overall director, Barbara Taylor, is herself an amateur. WB2HGK credits her present amateur license directly to the exposure she received while working with members of the New York amateur community in planning the Parade over the years. I guess that you can just hold out so long when you are working hand-in-hand with amateur operators on a continual basis. Barbara is an excellent example of this.

The last planning session prior to the event itself took place at around 5:00 am, this year, on Sunday, May 10th. Not wanting to travel in from Long Island where I was staying, I imposed upon the hospitality of Hank K2SSQ for the evening and at around 4:30 am made my way downtown to this meeting. Meeting? I guess "party" might be a better term. All those in positions of responsibility were gathered for a "Good Luck Breakfast," probably their last chance for a bite until the finish about twelve hours hence. Soon, the man who had put together the entire network of amateur communicators arrived. I have known Lou Belsky K2VMR for better than 20 years now; there is no better organizer to be found in the ranks of the amateur service. When Andy dropped out of the position a few years back, Lou stepped in and has been with it ever since. He had brought many innovations with him, such as diversity simplex and multiple repeaters, to enable ongoing communications over the entire route through the canyons of Manhattan. With Prime Minister Begin as guest and overall security very tight, instantaneous communication was essential. To make sure of such, Lou had enlisted the aid of a number of area experts in two-way VHF communications.

By 7:00 am, we were all on the corner of 57th Street and Fifth Avenue. Shortly, a large green bus pulled up. I was in-

Continued on page 31

New Products

DENTRON MT-2000A ANTENNA TUNER

Being a somewhat lazy sort when it comes to things like changing antennas and feedlines, I find a good, wide-range antenna tuner an invaluable operating aid. Recently, I wanted to use a 500-Watt amplifier on 15 meters without changing the RG-58 feedline to the antenna to the heavier RG-8-type coax. Experience and advice indicated that if I could get the swr down to 1.5:1 or under, the RG-58 would handle the higher power without breaking down.

Unfortunately, no matter how carefully I adjusted the antenna, I simply couldn't get the swr down to the desired level. Then a bit of serendipity appeared on the scene in the form of a new DenTron MT-2000A antenna tuner.

The MT-2000A was connected between the wattmeter (a DenTron W-2) and the antenna feedline, and adjusted for maximum received signal. Then a few Watts of rf was applied for final tune-up. With just a slight bit of tweaking of the transmitter and antenna matching controls on the tuner, the swr was brought down to where the indicator needle on the W-2's reflected power meter did not budge off the peg on the low end of the scale.

Voila! Success! For the past few weeks I've been able to run the amplifier at 500 Watts without any sign of difficulty. With the use of the MT-2000A, the RG-58 is holding up fine and my signal reports are consistently better than they were prior to using the amplifier. Results have been equally pleasing when I have used the tuner to match my other antennas, a 66-ft. random wire and a multiband dipole.

The DenTron MT-2000A is designed to match your transmitter to virtually any feedline, balanced or unbalanced, as well as to random wires. Frequency coverage is continuous from 1.8-30 MHz, and power capability 3 kW PEP. Features include front panel switching for lightning protection and to take the tuner out of the circuit when desired. There is also a heavy-duty, 3-core, 4:1 balun, an 18-position, 12-Amp, ceramic rotary inductance selector switch, and 6000-volt capacitor plate spacing.

Add the DenTron W-2 dual-meter wattmeter and Big Dummy dummy load, and you'll have a full-power tuner setup capable of handling virtually any matching and tune-up job you may have.

Styled to match the MLA-2500 amplifier and upcoming DenTron transceiver, receivers and transmitters, the MT-2000A antenna tuner measures 5¼" x 14" x 14" and weighs 18 lbs. The price is $199.50. *DenTron Radio Co., Inc., 2100 Enterprise Parkway, Twinsburg OH 44087.*

Morgan W. Godwin W4WFL
West Peterborough NH

UPGRADED 2 METER RIG FROM HEATH

Heath Company has made available an improved version of their HW-2036 frequency-synthesized 2 meter transceiver kit, the HW-2036A.

The HW-2036A has the same features and specifications as the HW-2036, except that the newer version allows operation on any 4 MHz segment of the transceiver's 143.5 to 148.5 MHz operating range. For those not already familiar with Heath's 2 meter rig, it features a phase-locked synthesizer/vco loop for switch-selectable QSY operation, and choice of simplex or standard ±600 kHz split operation. An auxiliary switch lets the operator choose his own offset.

The Heath HW-2036A.

The HW-2036A's synthesizer is locked to a precision 10 MHz timebase. A NAND gate logic system displays locked/unlocked status and inhibits out-of-band transmissions by preventing transmitter key-up. Other HW-2036A features include subaudible tone encoding, built-in 5 and 11 V dc regulators, hash filter/regulator, and gimbal mount. A standard PTT mike is included in the kit mail order price of $269.95 when the HW-2036A-2 is specified. When the HW-2036A-1 is specified, the PTT mike is replaced by the HD-1984 Micoder II combination mike/autopatch. The HW-2036A-1 sells for $289.95. Both prices are mail order FOB, Benton Harbor, Michigan.

For more information about the upgraded HW-2036A and a free catalog, write *Heath Company, Dept. 350-640, Benton Harbor MI 49022.*

KANTRONICS 8040-B RECEIVER

When UPS recently delivered a Kantronics 8040-B receiver, I was in the middle of several projects so I stuck it in a closet to await the arrival of the promised companion transmitter. I should have known better! Temptation and curiosity got the best of me, and a short time later I had the carton open and the unit sitting on the operating desk.

In looking over the receiver, I discovered that the antenna jack on the rear panel was an RCA-type. No problem! Having a Heathkit receiver that uses the same type of connector, I already had several cables made up with RCA plugs on one end and PL-259s on the other, so I did not need to use the plug supplied by the manufacturer.

With the antenna connection resolved, I then went looking for 9-volt transistor radio batteries, since the 8040-B uses two for power. Locating one in the junk box and robbing another from a little pocket portable, I installed them in the battery clips mounted on the inside back panel of the receiver.

The 8040-B is designed to work with a low impedance antenna such as a half-wave coaxed dipole. It will also give a good account of itself when connected to a simple random

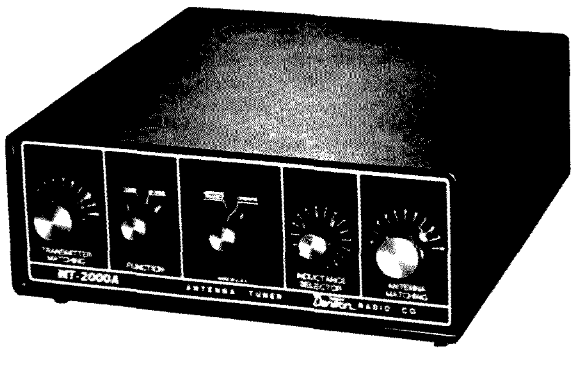

DenTron's MT-2000A antenna tuner.

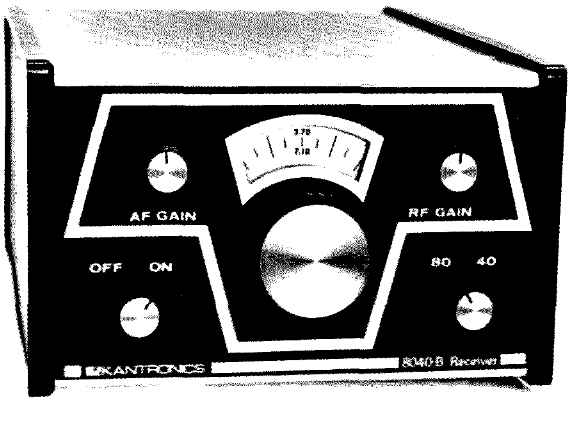

Kantronics' 8040-B receiver.

wire, particularly if it is 65 feet or longer. Reception can be optimized by tweaking up the preselector coils for each band (using the plastic adjustment tool included with the unit).

In my own case, with the receiver connected through a small antenna tuner to a 40-meter half-wave endfed wire, I turned it on and, after I touched things up a bit with the tuner, signals on the Novice portion of 40 meters poured in. Later in the day, I switched to 80 meters—with equally favorable results. The vernier dial works smoothly, and its tuning rate of almost seven turns to one complete rotation of the tuning capacitor provides plenty of bandspread to separate the signals.

With the exception of the front-panel-mounted tuning capacitor, af and rf gain controls, bandswitch and power on/off switch, and the audio output and antenna input jacks on the rear, all components are contained on one small circuit board. A pair of low impedance earphones or an 8-Ohm speaker may be plugged into the audio output jack.

Contained in an attractive black and grey case measuring 3 x 5 x 7 inches and weighing only a few ounces, the 8040-B lends itself nicely to portable operation. The receiver, a pair of lightweight phones, and a small coil of antenna wire will take up very little space and add only ounces to your load if you are backpacking. Combined with a small QRPp transmitter such as Kantronics' one-Watt 40 meter CW rig, the Rock Hound, you can have a complete and highly portable station to carry wherever you go. Actually, applications for the receiver are limited only by your imagination; if you are like me, new ones will keep popping into your mind every time you use it.

Having used the little receiver under widely varying conditions for several weeks at home and as a portable, I have concluded that you get a lot for your money when you buy one.

The Kantronics 8040-B is a state-of-the-art direct conversion receiver that does a first rate job of receiving CW signals on the 3.650-3.750 and 7.050-7.150 MHz segments of the 80 and 40 meter bands—for the affordable price of $79.95. Combined with the soon-to-be-announced companion transmitter (vfo-controlled and in the 10-Watt power class), newcomer and experienced amateur alike can have a compact and effective means for fixed station or portable operation at a reasonable price. *Kantronics, Inc., 1202 East 23rd Street, Lawrence KS 66044.*

Morgan W. Godwin W4WFL
West Peterborough NH

NEW HAMTRONICS CATALOG

Hamtronics, Inc., has announced publication of a new catalog crammed with goodies for VHF/UHF and OSCAR enthusiasts and two-way radio shops.

The 40-page catalog features a new line of VHF transmitting converters and linear power amplifiers, new 2-Watt FM transmitters, VHF and UHF receiver converters, VHF and UHF FM receiver kits, receiver preamps, test probe kits, power supplies, tone pads and tone encoder microphones, antennas, and many more items of interest to the active ham. For a copy of the new 4 x 5½ inch catalog, send a self-addressed stamped envelope to *Hamtronics, Inc., 182-F Belmont Rd., Rochester NY 14612.*

RECEIVER DIGITAL READOUT ATTACHMENT

A 4-digit LED frequency readout attachment for Wadley loop circuit receivers has been announced by Gilfer Associates, Inc. Currently available Wadley loop receivers include the R. L. Drake SSR-1 and the Yaesu FRG-7.

Called the GAR-7, the readout is easily coupled to the kilohertz oscillator in either receiver, using a manufacturer-supplied cable assembly. The megahertz setting in the Wadley loop receiver is preset by a drift canceling circuit, and only the kilohertz and hundreds of Hertz (000.0) need be read by the GAR-7.

The accuracy of the GAR-7 readout is better than ±10 Hz, and the use of a very low clock frequency eliminates spurs and birdies that plague standard offset counters attached to Wadley loops. Powered by 117 volts, the GAR-7 measures 2½" x 8¾" x 5". Available from stock for $179.00. Additional details are available from *Gilfer Associates, Inc., 52 Park Avenue, PO Box 239, Park Ridge NJ 07656; (201)-391-7887.*

The MFJ-400 8043 Econo Keyer.

NEW MFJ ECONOMY KEYER

The MFJ-400 8043 Econo Keyer from MFJ Enterprises is a reliable, full-featured economy keyer which uses the Curtis-8043 keyer-on-a-chip.

The panel controls consist of a speed control (8 to 50 wpm) that you pull to tune and a volume control with an on/off switch.

It has an internal weight control that lets you adjust the dot-dash space ratio for a distinctive signal to penetrate through heavy QRM for solid DX contacts.

The keyer has an internal tone control for its built-in sidetone and speaker.

There are two 3-conductor quarter-inch phone jacks for output keying and key paddle input.

It requires an external squeeze key for iambic operation, and has dot memory, instant start, self-completing dots and dashes, and jam-proof spacing. Its reliable solid state keying output can handle -300 V at 10 mA maximum for grid block keying and +300 V at 100 mA maximum for cathode-keyed and solid state transmitters. It uses a 9-volt battery, measures 3 x 2 x 4 inches, and has a blue top and white bottom.

MFJ provides a 30-day money-back trial period. If you are not satisfied, you may return it within 30 days for a full refund (less shipping). MFJ also provides a one-year unconditional warranty.

The MFJ-400 8043 Econo Keyer is available from MFJ Enterprises for $39.95 plus $2.00 shipping and handling. To order, call toll-free (800)-647-8660, or mail your order to *MFJ Enterprises, PO Box 494, Mississippi State MS 39762.*

HIGH-QUALITY, LOW-COST DAVIS 600 MHz MINI FREQUENCY COUNTER INTRODUCED

A versatile, high-quality 600 MHz frequency counter offering superior accuracy, sensitivity and reliability—yet costing less than many 20, 30

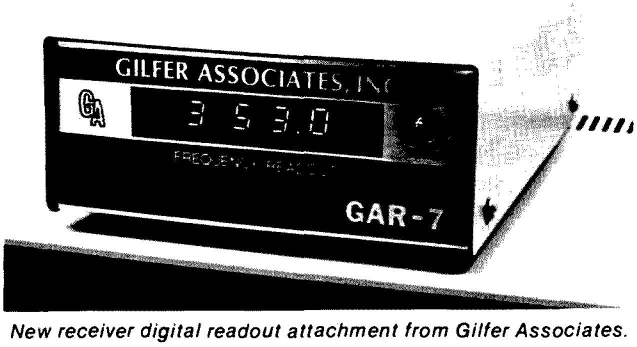

New receiver digital readout attachment from Gilfer Associates.

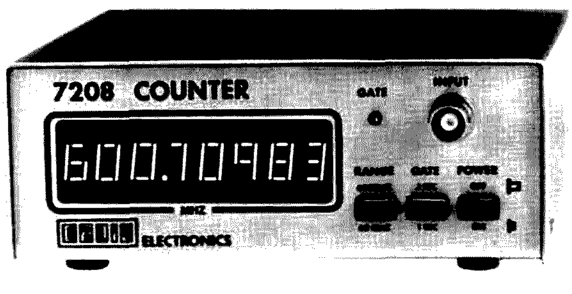

The Davis 600 MHz mini frequency counter.

and even 100 MHz counters—has been introduced by Davis Electronics. Designed for 115 V or 12 V operation, available factory-assembled or in kit form for even greater savings, the Davis 7208 VHF-UHF frequency counter incorporates the latest LSI technology in a wide range, portable instrument measuring only 5½" x 6" x 2" and weighing a mere 1¾ lbs.

Superior features of the Davis 7208 include durable, all-metal cabinet for rf shielding, large 8-digit LED display, push-button switches, built-in prescaler, gate light, crystal timebase, and automatic Dp placement. The compact unit comes complete with IC sockets and input cable.

Available low-cost options are crystal oven, nicad rechargeable battery feature for total portability, and built-in VHF-UHF preamp for direct measurement of low level rf signals in rf generators, receivers, etc.

The Davis 7208 has a frequency range of from 10 Hz to 600 MHz, with 0.1 and 1.0 sec. gate time; resolution is 1 Hz with 1.0 sec. gate and 10 Hz with 0.1 sec. gate, and sensitivity is from 10 mV @ 60 MHz and 100 mV @ 600 MHz (or 10 mV @ 150 MHz with built-in preamp option). Input impedance is 1 megohm/20 pF to 60 MHz and 50 Ohms above 60 MHz, and maximum safe input is 120 V rms to 10 MHz and 2 V rms above 60 MHz. Timebase specifications include frequency of 5.242880 MHz (std. or oven crystal) and accuracy of ±1 ppm after cal. (std.) or ±.5 ppm after cal. (oven crystal). Short-term stability is ±1 ppm/hr. after warm-up, while long-term (aging) is ±1 ppm/month (std.) or ±.5 ppm/month (oven crystal).

The 600 MHz kit (7208K), costing $149.95, comes complete with all parts, drilled and plated-through glass PC boards, cabinet, switches, and hardware, plus detailed assembly manual and calibrating instructions. Assembly time is about 4 hrs., and all parts are guaranteed 90 days. Factory service is available, if needed, at $25.00 plus shipping. A factory-assembled 600 MHz unit (7208A) costs $199.95 (plus $2.00 shipping) and is calibrated to specifications and guaranteed for one year; the transformer is guaranteed for life. The option prices are: (01) crystal oven, $39.95; (02) rechargeable nicad batteries, $39.95; (03) carrying handle, $5.00; and (04) built-in VHF-UHF preamp, $10.00. For further information, contact *Davis Electronics, 636 Sheridan Drive, Dept. 808, Tonawanda NY 14150; (716)-874-5848.*

KANTRONICS ROCK HOUND QRPp TRANSMITTER

I normally avoid using the adjective "cute" like it was the plague when writing about amateur equipment. After all, how can anything described as being cute be taken seriously? Well, Kantronics has pulled it off with their new "Rock Hound."

A one-Watt, crystal-controlled 40 meter CW transmitter tucked into a 2" x 4" x 3" plastic case, the "Rock Hound" is cute! And it really works.

Setting the little rig up for operation couldn't be simpler. An antenna is attached to the RCA-type jack on the front panel. The transmitter expects to see an impedance of 50 Ohms, and there is an internally-adjustable pi output network to peak power output. A key is connected to the center pin of the standard quarter-inch phone plug provided with the unit. The other side of the key is attached to the positive terminal of a 12 to 15 V dc power supply or battery. The ground side of the phone plug is then connected to the negative terminal of your power source. Finally, with the phone plug put into the jack on the front panel, you are ready to go on the air.

Connecting the "Rock Hound" to my 40 meter half-wave endfed wire through an antenna tuner, I found that the little rig puts out a quite respectable and effective signal. The transmitter came with a crystal (optional) for 7.125 MHz, but I cheated a bit and dug several more out of the junk box to provide greater flexibility. The transmitter can also be driven by a vfo by plugging its output into the crystal socket.

Like fly-fishing, QRPp operation isn't nearly as difficult as some of the "experts" would lead you to believe. It does, however, require a good measure of patience and, of course, enthusiasm is invaluable. With very low power, it is generally not worth the effort to spend time calling CQ. If you have an assortment of crystals or a vfo, you should tune around until you hear a loud signal calling CW or about to sign with another station. Then zero beat or, if you are crystal-controlled, get as close to the other station's frequency as possible and call them when they stand by. Your batting average may not be too high, at least for a while, but when you do make a contact with QRPp, the satisfaction is terrific.

The Kantronics Rock Hound is lots of fun, and at only $20.00 you can certainly afford to enjoy the challenge and pleasure of very low power operation. The optional crystal is available for $3.00. *Kantronics, Inc., 1202 East 23rd Street, Lawrence KS 66044.*

Morgan W. Godwin W4WFL
West Peterborough NH

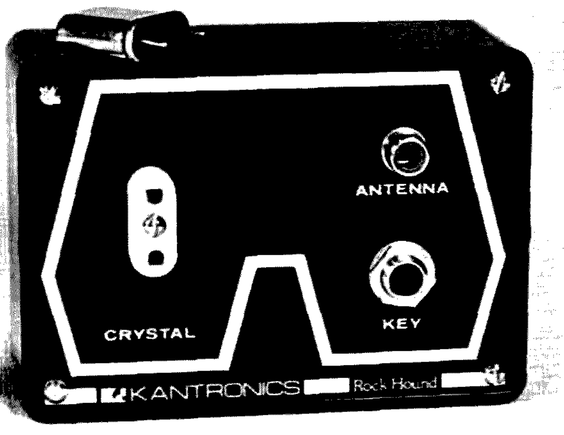

The Rock Hound from Kantronics.

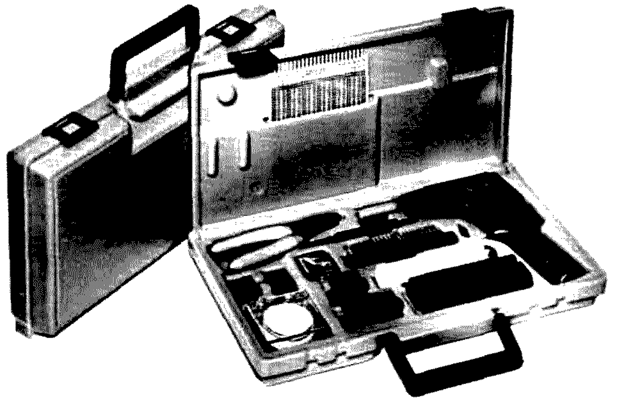

OK Machine and Tool's model WK-5B wire-wrapping kit.

WIRE-WRAPPING KIT

Model WK-5B is a unique new wire-wrapping kit that contains a complete range of tools and parts for prototype and hobby applications, all conveniently packaged in a handy, durable plastic carrying case.

The kit includes the model BW-630 battery wire-wrapping tool, complete with bit and sleeve; the model WSU-30, a remarkable new hand wire-wrapping/unwrapping/stripping tool; a universal PC board; an edge connector with wire-wrapping terminals; a set of PC card guides and brackets; a mini-shear with safety clip; industrial quality 14-, 16-, 24-, and 40-pin DIP sockets; an assortment of wire-wrapping terminals; a DIP inserter; a DIP extractor; and a unique 3-color wire dispenser complete with 50 feet each of red, white, and blue Kynar® insulated, silver-plated solid AWG 30 copper wire.

Priced at $74.95, the WK-5B wire-wrapping kit is available from your local electronics distributor or directly from *OK Machine and Tool Corporation, 3455 Conner Street,* Bronx *NY 10475.*

THE TRAC-KEY

Trac Electronics, Inc., has introduced a new twin paddle squeeze key. The new Trac-Key features an extra heavy base with non-skid feet (so the key does not move when in use), adjustable contact spacing, touch tension (allowing comfort keying), smooth, friction-free paddle movement, and five-way binding posts, all on a handsome crinkle-finish base with rich red paddles. The Trac-Key is compatible with the Trac CMOS Electronic Keyer or any other keyer.

The Trac-Key is available direct from Trac for $25.95 (plus $2.00 shipping and handling), or through local dealers

Continued on page 35

Radio Row Revisited

—it's alive and well in Tokyo

Brad Field W8JJO
16725 Fenmore
Detroit MI 48235

Old-timers will remember the radio row of yore in every city of any size in the United States where all the electronic parts wholesalers used to huddle their shops together in one part of town as if for mutual support. A ham who wanted a receiver or a resistor could browse from one to the other until he found the best one for the best price.

Radio row still exists—in Tokyo. I suppose there's hardly a ham active today who has not heard of Akihabara (say hockey harbor, rah!—then leave off the first H, and you've got it). The prices are not what they were before the dollar did its nose dive with respect to the yen in the fall of 1977 and winter of 1978, but the parts and the products are all still available there.

When in Tokyo, take the Japanese National Railway's local elevated train to the Akihabara station. Come down the steps to the street and follow the line of display cases of radio gear to the lobby. There will be doors to the left and to the right, both leading to the street and both to the acres of radio row in Tokyo. You will come upon a scene like that shown in Photo A—buildings with floors full of gear, not spread out, but jammed into innumerable tiny booths. Up on top of the buildings, the demonstration antennas beautify the Tokyo skyline.

The ground floors of the buildings are open to the street and lined with little shops selling parts, television sets, high-fidelity gear, and tubes. Get a little closer and have a look at the varieties of cable and coax available. Or peer in-

Photo A. Akihabara—one of the buildings seen from the Japanese railway station.

to the dark aisles leading to the uncharted interior of the building.

Inside is an endless row of booths, all of them crammed with gear and parts. One shop, for instance, sells four or five kinds of switches. Another, the shop shown in Photo C, has test gear, each item labeled with a sign begging the reader to ask how big a discount he can get.

In between these interior shops are stairwells leading upward. When you get upstairs, you'll find UHF and VHF transceivers, walls full of them, with no two exactly alike.

You can climb up further still and have a look at some antennas, as in Photo D. Those two in the foreground are Masanori Suzuki JH1CNC and Dave Bell W6AQ. Readers who have seen the movie "Ham's Wide World" will recognize Dave Bell's name as that movie's producer. He was in Japan in the fall of 1977, when these photographs were taken, on several errands, one of which was to shoot some film for another movie on ham radio.

Meanwhile, don't rush out to buy a plane ticket to Tokyo just to go to Akihabara—not yet, at any rate. Japanese prices are no longer low. And Tokyo remains one of the most expensive cities in the world. Furthermore, a large portion of the gear on display here is aimed at the lucrative Japanese Novice market: ten Watts maximum, phone only, 80, 40, 15, and 10 meters and VHF. Only about ten percent of the Japanese amateurs have a higher class of license.

But, if you're going to be in Tokyo anyway, don't miss it. A Sunday is best because, at noon, they close the main street to automobiles and put out tables and chairs. The little kids come out and play, and everyone has a good time. You will, too. Just remember: The maximum that will go through Japanese parcel post is ten kilograms, 22 lbs., per box. If you get anything heavier than that, you'll have to carry it on the plane. ■

Photo B. Booths open to the street in Akihabara.

Photo C. A test-gear shop. A place like this is one of the few places in Japan where prices are negotiable.

Photo D. A small corner of the antenna display at one of the larger ham dealers. Left—JH1CNC; right—W6AQ.

J. M. Keneipp WB9PYM
2201 Lincolnwood Dr.
Evanston IL 60201

How To Work Europe With An HT

—hint: requires trans-Atlantic plane fare

As thousands of Americans discover each year, a trip to Europe represents a delightful and memorable vacation – historical settings, magnificent scenery, and interesting customs. But to add a whole new dimension to your European vacation, take along your 2m FM handie-talkie. The DX contacts that you can make on 2m offer a fine opportunity to learn about foreign hamming, the country, and the customs.

The purpose of this article is to tell you about some of the preparations that should be made before your trip and to describe the fun you can have during your trip. Although operating 2m FM in Europe is really easy and convenient, there are several things that you should know ahead of time. I found that the most difficult part of operating a 2m rig in England and Germany was getting the answers to several key questions ahead of time. I could not find one complete source which answered all of my questions. Consequently, I spent a lot of time before each trip in correspondence and research. Fortunately, however, you can benefit from my pretrip trials and tribulations. Consider what follows as the "ABCs of 2m FMing in Europe."

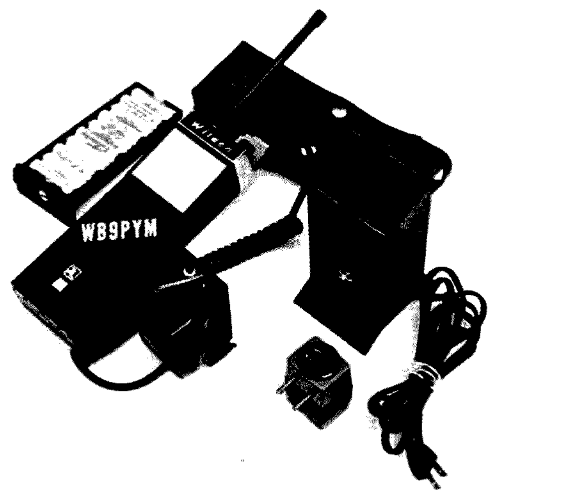

Photo A. A minimum of equipment is needed for 2m FM operation in Europe. In addition to a transceiver, take your external microphone fitted with a piggyback tone burst, charger for the nicads, 220/110 V ac converter, and an extra set of nicads.

Your choice of rigs will be related to what you already have or can beg, borrow, or build – plus how you plan to travel about in Europe. Although I had the choice of taking either my mobile rig or my handie-talkie, I quickly opted for the handie-talkie because of its portability and light weight. When you and the XYL compare the items of clothing, photographic equipment, etc., with the number of bags you want to carry and your weight allowance (usually 44 pounds per person), you will probably reach the same conclusion that I did. Further, the fine system of repeaters which exists in Germany and England will insure that two Watts through a rubber ducky will make all the QSOs you can log.

Preparations

The first step in planning your FM trip to Europe will be to obtain a reciprocal license from the countries that you plan to visit. Generally speaking, your reciprocal license will carry privileges comparable to the ones you now hold. An excellent source of information on reciprocal licensing is *The International VHF-FM Guide*, compiled and produced by G3UHK and G8AUU (order from Julian Baldwin G3UHK, 41 Castle Drive, Maidenhead, Berks., SL6 6DB, England, for $3 or 14 IRCs). This little booklet covers all the countries in Europe, plus a few others, and provides such licensing details as: information you need to supply, mailing addresses, costs, etc. The *Guide* also contains listings of repeater channels by city and country.

Allow plenty of time – at least two or three months – to obtain your reciprocal license. The vagaries of the mail system and the possible need to provide additional information may stretch out the process. For example, I found that my reciprocal license from England required several exchanges of letters over about two months, whereas I received the German license within three weeks. Incidentally, a reciprocal license from Great

Britain may be mailed only to your intended address in England; your German license can be mailed to your home QTH before you leave.

The question of powering your rig is fairly easy to answer. Assuming that your rig uses nicads, you will need to provide a means for recharging them during your stay in Europe. Since the standard in Europe is 220 V ac, you will need a 220/110-volt converter as well as your charger. Be sure to match the power requirements of the converter and the charger. Also, it is advisable to choose a converter which uses a transformer rather than resistors to drop the voltage. Depending upon the charge rate of your setup, you may want to take along an extra set of nicads to increase operating flexibility.

The number and frequency of crystals for your rig will depend upon your itinerary in the countries you plan to visit. European 2m repeater FM channels have the same offset as in the USA but cover input frequencies from 145.000 to 145.225 MHz in 0.025 MHz steps. The outputs of the repeaters range from 145.600 through 145.825 MHz. The 10 repeater channels within this band are identified as channel R0 through channel R9. The *International VHF-FM Guide* will provide you with accurate data on the repeater channels found in various cities.

Incidentally, you will find only one channel in each city, unlike most cities in the United States which have several 2m repeaters. The limited number of repeaters makes for a lot of activity and generally fairly short time-out durations. For example, the London repeater, GB3LO, has a timeout of 60 seconds; the Munich repeater, DBØZM, times out in 80 seconds.

Regarding simplex, there are five channels between 145.500 MHz (S20, the calling channel) and 145.600 MHz, each separated by 0.025 MHz. The principal working channel is S22, 145.550 MHz.

Because several cities in the same country will have the same repeater channels, you won't need to crystal up for more than a couple of channels. And, while two channels may not cover every city you visit, they will give you quite a bit of action.

Obviously, 2m crystals in the 145 MHz band are not standard with American crystal manufacturers, so you will need to order them special from any of the several crystal-grinding firms. The time required for delivery of your crystals will vary, so allow four to six weeks. I found, however, that Sentry shipped my 145 MHz crystals within one week after receiving my order.

Almost all of the European repeaters require a 1,750 Hz tone burst for access. If you are blessed with a good natural whistle you can probably whistle them up. Unfortunately, my built-in whistle is not very reliable, so I opted to build a tone burst for use in Europe. Inasmuch as tone bursts are needed on few stateside repeaters, I decided not to build the burst permanently into my handie-talkie but to build it as a plug-in piggyback unit on the external microphone of my Wilson 1402. This arrangement worked fine and I am able to use the miniplug on the microphone case for my autopatch touch-tone™ back in the States.

Finally, your preparations should include packing a few American ham magazines and a minilog. The ham magazines can be used as gifts and interest items during QSOs. Most European hams have never seen one of our ham magazines and would certainly welcome the opportunity to either have one or look at one.

Assembling a Tone Burst

One of the neatest and simplest ways to build an outboard tone burst for temporary attachment to your external microphone is to use a prebuilt unit such as is available from Lye Communications in England (238 Stamford Road, Brierley Hill, West Midlands, DY5 2QE, England; cost is £4; an $8 bank draft covers the unit and airmail shipment). The module is built on a small PC board measuring about 2¼" by 1-7/8" and less than ½" thick with the components. The burst is a stable 1,750 Hz tone with a duration of approximately 600 ms. Any dc voltage between 9 and 15 may be used. Drain is only 8 mA at 12 V dc. Power can be supplied either from your handie-talkie or from an outboard 9 V transistor battery.

Although a number of tone burst circuits have been published for building one from scratch, I found that rounding up the components would be difficult and would have cost more than the ready-to-use Lye unit. As shown in the photo, I built my tone burst into a small Bakelite™ box measuring 3¼" x 2-1/8" x 1-1/8".

With the exception of the Lye unit, all parts are available from Radio Shack or your junk box. The cost of buying all of the parts new (see Parts List) is less than $12.00.

After you have all the necessary parts, you can build the outboard tone burst assembly in less than two hours. Start by opening the back of the external microphone and locating the two points which will feed the tone to the transmitter when you press the momentary-

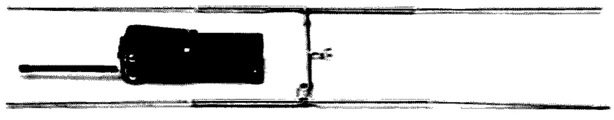

Photo B. The HB9CV 2m antenna weighs about 10 oz. and provides 5 dB gain. Length of the director is 95.6 cm; the reflector, 103 cm. Spacing between elements is 25 cm. The above model is sold commercially in Germany where it is popular.

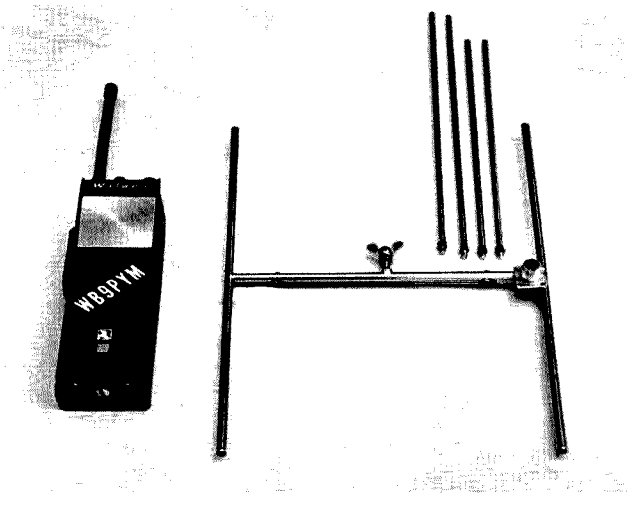

Photo C. For storing this German version of the HB9CV antenna, the end sections can be unscrewed. The H-section measures about 10" x 15".

contact switch (while pressing the push-to-talk switch at the same time). Install the subminiature phone jack on the top side of the microphone case and connect the jack to the two points for the tone audio. The unobtrusive modification of your external microphone provides the means for injecting either a tone burst or a touchtone signal.

The next step is to prepare the outboard tone burst assembly. Remove and discard the aluminum cover that comes with the Bakelite box and then carve the exposed edges so they match the contour of the back side of the mike case. The Bakelite is easy to work with an X-acto™ knife. Drill three holes in the box: one for the leads from the transistor battery; one on the top of the box for the connection to the subminiature phone jack; and the third hole, also on top of the box for the momentary-contact push-button switch. Next, solder four leads to the Lye module, according to their instructions, so that pressing the push switch produces the tone burst through the phone jack. After testing the completed assembly to make sure it works the way it should, fasten it to the bottom of the Bakelite box with epoxy; also epoxy the two sets of leads so they won't pull out (leads from the 9 V battery and from the phone jack). Finally, using plastic tape, attach the transistor battery to the bottom of the box, as shown in Photo D. The entire assembly is now ready to attach to the back of the microphone case – also with plastic tape for easy removal.

Operating

At last, the magic moment has arrived. After spending seven hours, more or less, winging across the Atlantic under cramped conditions – if, like most of us, you've travelled by charter airline – you've landed, struggled with your luggage through customs, and have checked into a hotel or *gasthaus* and are about ready for a few hours of horizontal QRT to take care of the jet lag. But first you must unpack the 2m rig and check out the local repeater.

The chances are that, as soon as you turn on the rig, you will hear a QSO. One thing will be strange to you when you listen to a repeater for the first time in either England or Germany – the local hams talk very fast, and, while the British amateurs speak English, you will probably find it difficult to understand some of the words. In Germany, most of the QSOs are, naturally, in German, but you will find that there are a lot of hams who speak English – many of them as well or better than you or I. And as soon as you can slip a word in edgewise, you'll announce your call and see what happens. As soon as the local operators hear an obviously American accent and a call which indicates a reciprocal license, you may create a pileup as everyone wants to work you. Most of the hams will want to exchange QSL cards, "via the bureau" to save postage. (Make sure you have envelopes on file with the bureau.)

I found that special attention was required to understand the various calls and especially to keep handles straight, since some of the first names were new to me. Also, the first time you hear a new term that is in common local use, you may do a double take, e.g., "listening through" in England or "73 and 55" in Germany.

It would be an advantage to speak German in working German operators, but I found that, despite my total lack of fluency in the German language, there were enough hams who spoke English, especially in larger cities such as Munich.

There is no problem in finding interesting topics during QSOs. About the only problem I had was trying to remember the very short time-outs. The universal subjects of rigs, antennas (aerials in England), and home QTH were usually followed by my inquiries on the location of local ham stores, radio clubs, and ham publications.

Your 2m contacts can be a source of information on interesting events that would never be listed in the standard tourist guides. For example, during a QSO in Munich, I learned about a festival being held one sunny Sunday afternoon near the Olympic Stadium. Some 30 Bavarian dancing and marching groups in native costumes provided a unique set of color slides, as well as some unforgettable sausages and beer in an enormous tent.

HB9CV 2m Antenna

Although the HB9CV antenna is used extensively by 2m operators in Germany, and apparently has been around for some time, it is unknown to most American hams. During an eyeball QSO with Ed DJ7CW in Munich, I watched in amazement as he easily worked full quieting into the Zugspitze repeater, DBØZU, more than 80 km away through an HB9CV mounted on his first-floor apartment balcony. I promptly purchased a commercial model of the antenna at a Munich ham store. This little beauty is shown in Photos B and C.

The HB9CV, a version of the ZL-Special, provides 5 dB gain. The antenna I purchased for the equivalent of about $18 makes a great traveling companion for a handie-talkie; it weighs about 10 oz. – less than the magazine you are reading. The end sections can be unscrewed for storage or travel. When the end sections of the elements are removed, the center "H-section" measures only 25.8 cm by 38 cm (10" by 15") and easily fits into a small suitcase or even a briefcase. The overall size of the fully assembled unit is: director – 95.6 cm; reflector – 103 cm; and spacing between elements – 25.8 cm. There is an SO-239 for the coax feedline and a 30 pF condenser connected between the SO-239 and the feedpoint.

The HB9CV is not made commercially in the USA but would be easy to build from 6 mm diameter brass tubing. Construction details can be

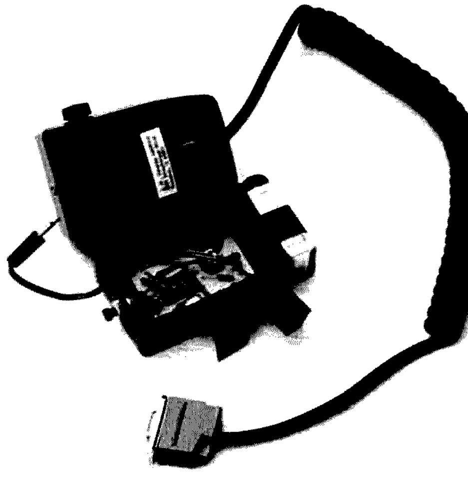

Photo D. Piggyback tone burst unit mounted in a small Bakelite box is shown with the external microphone. The unit is taped to the back of the microphone case for use. Burst input is provided through the miniature jack on top of the mike case. The momentary-contact push-button switch activates the tone burst.

found in volume 2 of the recently published *RSGB Radio Communication Handbook*, page 14.24. Incidentally, aside from general 2m work, this antenna is ideally suited to fox hunting because of its light weight and high gain.

Eyeball QSO

Two meter FM operating is always fun in Europe, but, for me, the high points of my vacation trips to England and Germany were the eyeball QSOs with some of the hams I met on 145 MHz. After spending a few hours in the QTH of Mike G3WMQ, near London, or Ed DJ7CW, in Munich, we knew much more about each other's country in general and hamming than we could ever have known otherwise. And while you disappear into the ham shack for an eyeball QSO, your XYL can have a fascinating visit with her counterpart about harmonics, recipes, or whatever. After you and your XYL have experienced this stimulating style of person-to-person diplomacy, you will be convinced that there is nothing like 2m FMing in Europe. ■

Parts List

Lye Communications tone burst module
Bakelite box, mini utility case (Radio Shack no. 270-230)
SPST miniature momentary-contact push-button switch, normally open (Radio Shack No. 257-1547)
2-conductor 3/32" subminiature phone plug (Radio Shack no. 274-289)
Subminiature phone jack, 3/32" (Radio Shack no. 274-275)
9-volt transistor battery clip (Radio Shack no. 270-325)
Miscellaneous: epoxy, hook-up wire, 9-volt transistor battery, plastic tape

Looking *West*

from page 18

formed by Lou that this was to be the Mobile Command Post for all communications. The driver-owner was Roger Mion WA2UMD. As I sat talking with Roger, I could not help but remember back to the days when my bright red VW van served the same purpose—though it was a lot more crowded. Roger's bus was equipped with all the comforts of home, including running water, heating and cooling, and a neat little KDK radio that was the mainstay of the network. Soon Roger, Lee, and a few of the others excused themselves, donned tool belts, and explained that they were going to install the "portable command machine" on a few of the local skyscrapers. It was a programmable split-site box interlinked on UHF. While the WR2AHU repeater, located atop the RCA Building, was to be the main communications channel (backed up by .52 and .94 simplex), the portable unit provided by Roger and his associates was an added measure of security. It was at about this time that people in droves, both amateurs and marchers, began to arrive. Quickly, the amateurs were given their individual assignments by Linda WB2GZW, issued the proper identification for themselves and their vehicles, and had their radios checked to be sure that all were operating on frequency. The latter service was courtesy of DSI's VP-Marketing, Dennis Romack WB6OYI, who offered the use of the contents of his sample case for the day. By 8:30 am, everyone had reached his assigned location (including Dennis, who wound up on 59th Street and 5th Avenue with his HT-220). Linda began a net callup over AHU. As I stood there watching her perform, I was very taken. With expertise and class, she called up and ran this net for the next six solid hours. No one could fluster her, and when she told a field operator to stand by, he did so. I was in awe of that gal. Even when some warped mind decided to get his kicks by jamming parade communications (on the AHU system), she kept her cool. New York has its share of sickies, and this had been expected. Everyone knew exactly what to do and what channel to go to. Quite soon, one warped individual was left with no one to listen to him.

Soon it became "hot and heavy." Messages from all over the place were pouring into the Command Center. Each one was expertly handled and expedited. I have no exact figures on the number of pieces of traffic handled, but it was easily in the high hundreds—probably over the 650 mark. It was big city amateur radio at its best.

Who are these amateurs and why do they do it? They come from many of the area repeaters and clubs, including LIMARC, the Metropolitan Repeater Association, the Kings County Repeater Association, the WR2AHU repeater group, the Red Cross Amateur Repeater Club, and many other organizations too numerous to mention. They come from all walks of life, and even though this is a parade meant to honor Israel each year on its birthday, the amateurs involved represent a cross section of faiths and nationalities. I asked many why they were participating. All gave about the same answer. To paraphrase, "It's a job that amateur radio can accomplish better than any other service, and we are amateurs of this area. It's our obligation."

The Parade ended at about 5:30; it had been scheduled to end at 4:00, but events like this usually run late. I was heading back to LA that evening and had to make a 9:00 pm flight out of Kennedy. After some quick good-byes, the nose of the rented Toyota was pointed across the 59th Street bridge and out onto the Long Island Expressway. That's about the last I remember until I awoke somewhere near Las Vegas. I had slept through takeoff and most of the trip. As I eased back in the seat, I reminisced. I thought of how funny it was that I could be sitting at 30,000' plus after six or seven hours ago having walked up and down Fifth Avenue photographing amateurs doing what they loved the most. In the flight bag under my seat was about 1200 feet of film that would go to the lab the following day. The 1011 flew on, quietly and smoothly. Its destination, the City of Angels. Home.

OSCAR Orbits

The listed data tells you the time and place OSCAR crosses the equator in an ascending orbit for the first time each day. To calculate successive orbits, make a list of the first orbit number and the next twelve orbits for that day. List the time of the first orbit. Each successive orbit is 115 minutes later (two hours less five minutes). The chart gives the longitude of the first crossing. Add 29° for each succeeding orbit. When OSCAR is ascending on the other side of the world, it will descend over you. To find the equatorial descending longitude, subtract 166 degrees from the ascending longitude. To find the time it passes the North Pole, add 29 minutes to the time it passes the equator. You should be able to hear OSCAR when it is within 45 degrees of you. The easiest way to do this is to take a globe and draw a circle with a radius of 2480 miles (4000 kilometers) from the home QTH. If it passes right overhead, you should be able to hear it for about 24 minutes total. OSCAR will pass an imaginary line drawn from San Francisco to Norfolk about 12 minutes after passing the equator. Add about a minute for each 200 miles that you live north of this line. If OSCAR passes 15 degrees from you, add another minute; at 30 degrees, three minutes; at 45 degrees, ten minutes. Mode A: 145.85-.95 MHz uplink, 29.4-29.5 MHz downlink, beacon at 29.502 MHz. Mode B: 432.125-.175 MHz uplink, 145.975-.925 MHz downlink, beacon at 145.972 MHz.

Oscar 7 Orbital Information

Orbit	Date (Aug)	Time (GMT)	Longitude of Eq. Crossing °W
16967 Abn	1	0052:56	71.7
16980 Bbn	2	0147:13	85.3
16992 Bbn	3	0046:34	70.2
17005 Abn	4	0140:51	83.8
17017 Bbn	5	0040:12	68.6
17030 Bbn	6	0134:29	82.2
17042 Abn	7	0033:50	67.0
17055 Bbn	8	0128:07	80.6
17067 Bbn	9	0027:27	65.5
17080 Abn	10	0121:45	79.1
17092 Bbn	11	0021:05	63.9
17105 Bbn	12	0115:23	77.5
17117 Abn	13	0014:43	62.4
17130 Bbn	14	0109:00	75.9
17142 Bbn	15	0008:21	60.8
17155 Abn	16	0102:38	74.4
17167 Bbn	17	0001:59	59.2
17180 Bbn	18	0056:16	72.8
17193 Abn	19	0150:33	86.4
17205 Bbn	20	0049:54	71.3
17218 Bbn	21	0144:11	84.8
17230 Abn	22	0043:32	69.7
17243 Bbn	23	0137:49	83.3
17255 Bbn	24	0037:10	68.1
17268 Abn	25	0131:27	81.7
17280 Bbn	26	0030:47	66.6
17293 Bbn	27	0125:05	80.2
17305 Abn	28	0024:25	65.0
17318 Bbn	29	0118:42	78.6
17330 Bbn	30	0018:03	63.4
17343 Abn	31	0112:20	77.0

Harry L. Helms, Jr. WA4EOX
PO Box 331
Fort Mill SC 29715

What? CB Repeaters?!

—*perfectly legal, too*

This is an article about repeaters for CB use. Before you start firing off nasty letters about such heresy, be advised that I am not referring to the familiar Class D Citizens Radio Service on eleven meters, but rather to Class A CB, more formally known as the General Mobile Radio Service. Class A CB is located on sixteen channels between 460 and 470 MHz, uses the FM mode, and allows the use of repeaters to increase range, just as amateurs have been doing for years on two meters and other VHF/UHF bands.

The most immediate question is: Why should amateurs be interested in Class A CB when there are so many other bands where strictly amateur repeaters can be used? There are some good reasons, such as:

1) Class A is CB with the same licensing requirements (form 400) and permissible business and personal uses as the Class D service. That might seem to be a disadvantage at first glance, but think a little bit. You are free from many of the more nitpicking and bothersome requirements of the amateur rules, such as third-party logging and prohibitions on commercial use. Using your local two meter repeater for coordinating hamfest activities might not be legitimate under paragraph 97.112 of the FCC rules, but no such problem exists under Class A CB.

2) You must request a specific frequency from the FCC on your application for a Class A license and must restrict operation to the channel assigned. That must seem like a megabummer for any true-blue ham, but it's actually a boon to all those who want a really closed repeater! You and a group of your buddies can jointly apply for a specific channel, share the same Class A repeater, and you have your own private system.

3) Class A is uncrowded even in metropolitan areas. Only about 5000 licenses are currently outstanding, and not all of those are active.

4) Both hams and nonhams can share in and participate in a repeater communications system similar in range and performance to those systems on the 450 MHz amateur band. An amateur club could set up a Class A repeater system for the use of its members who are licensed amateurs, their unlicensed spouses and children, Novices who have no amateur phone privileges, and even those who are working on their tickets. Class A, in fact, offers the potential to become a band for the type of no-code, easy-license operations envisioned under the proposal for the Communicator Class amateur license!

Class A CB is by no means a new development, having been established by the FCC back in 1947. Originally, 75 channels were assigned to Class A, but these have now been cut back to a grand total of sixteen available frequencies. For repeater service, only eight channels — pairs of input and output frequencies — are available. Input and output frequencies are separated by 5 MHz, and only mobile and hand-held units are allowed to work through the repeater systems. Base stations are only allowed simplex operation on eight frequencies. However, "remote base" operation is permitted in the same manner that it is employed by amateurs in the VHF/UHF bands.

Class A development has languished mainly due to the lack of suitable equipment

Standard's GMR-1 is especially designed for Class A CB use.

for the band. In the early years, operation was AM and without repeaters, which meant that the operating range was little more than shouting distance. With the introduction of Class D, manufacturers and potential users stampeded from 70 cm to 11 meters, and Class A was essentially forgotten.

In recent years, UHF has been increasingly used by various business, industrial, and safety radio services, and these services have created a demand for reliable, state-of-the-art UHF equipment. Simple retuning allows much of this equipment to be used for Class A. At least one manufacturer, Standard Communications, is currently marketing gear designed specifically for Class A, and others are expected to soon follow. Complete base and mobile radio systems, hand-held units, and fully-assembled repeaters are all being marketed today for Class A. Some dealers are even offering to install and maintain repeaters for Class A users. Use of the repeater is available by renting a tone encoder to gain access, with costs starting at $5.00 a month.

Class A is now FM instead of AM, and maximum power is 50 Watts, although some areas are restricted to 15 Watts. These are generally the same areas where amateur operation on 420-450 MHz is restricted. You'll also find that you must specify the number of base and mobile units (including hand-held and marine units) on your application form. If you find that you later add more units to your Class A system than specified on your license, it will be necessary to file for a modification of your license. You will also be restricted to the mode of authorization and output power authorized on your Class A license. However, since you specify the mode of emission and transmitter power on your application form, this is not as restrictive as it may sound. You must use only accepted equipment in Class A service. But you may freely change or substitute equipment as long as it is the same mode and equal to or less than the power output specified on your license.

Application for a Class A license is made on FCC form 400 (except in the Chicago area, where it's form 425). You must also purchase ($1.00 or less) a copy of part 95 of the FCC rules pertaining to the Class A service from the Government Printing Office. FCC form 400 is a bit different from those you may have seen in the past from the FCC. It must be completed on a typewriter and contains several sheets of carbon paper. One of the carbon copies is validated by the FCC and returned to the applicant. It serves as his license.

Class A may be an idea whose time has come. With the FCC looking for a UHF band for CB and a still continuing demand for a code-free "Communicator" amateur license, Class A has the potential to at least partially satisfy both demands. One channel pair could be designated as the UHF equivalent of Class D channel 19 for travelers, and repeaters for this channel could be established along major highways. The other channels could be used by the "Communicators" for repeater operation as the FCC envisioned under their proposal for a code-free ham license.

All this is in the future, however. For the present, Class A is a very viable alternative for repeater groups who want to escape the two meter crowd or to establish a truly private repeater system. One escapes some of the more confining aspects of the amateur regulations, as well. It's the best of both CB and amateur radio – who could ask for more? ■

New Products

from page 24

throughout the US and Canada. *Trac Electronics, Inc., 1106 Rand Building, Buffalo NY 14203.*

NEW MFJ 24-HOUR DIGITAL CLOCK

MFJ Enterprises is marketing a new 24-hour digital clock with huge 1-5/8-inch digits that you can see from clear across the room. This is one clock strictly for your ham shack, one that you can leave set to GMT.

The alarm can remind you of a sked or, if used with the snooze function, it can act as an ID timer to buzz you at 8-minute intervals.

It carries a one-year limited warranty by MFJ Enterprises, and a 30-day money-back trial period. If you are not satisfied, you may return it within 30 days for a full refund (less shipping). The clock lists for $29.95 (include $2.00 for shipping and handling).

To order, call toll-free (800)-647-8660, or mail the order to *MFJ Enterprises, PO Box 494, Mississippi State MS 39762.*

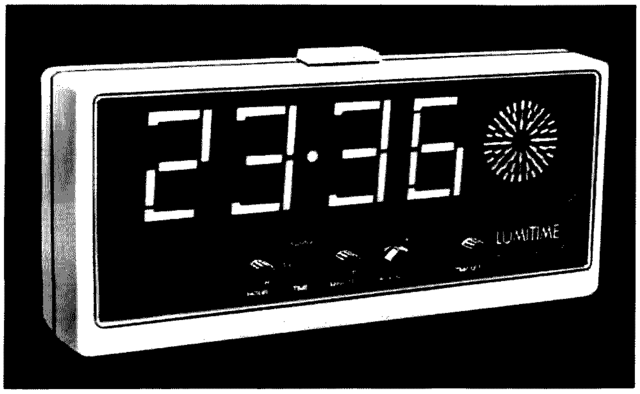

MFJ's new 24-hour digital clock.

DENTRON W-2 WATTMETER

Today's increasingly expensive equipment and crowded band conditions make it more important than ever that appropriate precautions be taken to protect your rig from damage and to avoid unnecessary interference to other operators. One of the simplest and most effective measures you can take to ensure proper operation of your gear is to use a wattmeter for tune-up and as a constant monitor while transmitting.

DenTron's W-2 wattmeter, with its dual meters that let you read both forward and reflected power at the same time, is an attractive answer to the problem of ensuring that your rig is operating efficiently into a properly matched load. Another thoughtful touch is the removable sensing element. By

Continued on page 62

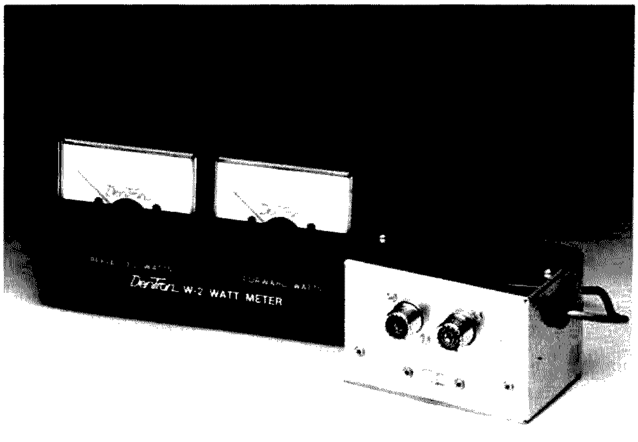

DenTron's W-2 wattmeter.

Stirling M. Olberg W1SNN
19 Loretta Road
Waltham MA 02154

A Complete X-Band Transmitter

—easy to build

Microwave experimenters in the X-band often require a signal source that has a means of adjusting the output amplitude and frequency. Frequency calibration is also desirable. The above characteristics can be found in standard signal sources, most of which are war surplus and have disappeared from the surplus dealers' shelves or from laboratory stock rooms which had friendly hams operating them. To be sure, these items are still available from microwave manufacturers, but they're at prices well beyond the amateur's means.

The construction of a signal generator which can have laboratory features is not too difficult. The requirements for laboratory standards are much more stringent than most amateurs need, so some of these features can be omitted.

At W1SNN, I constructed a signal source which serves two purposes. It serves as a signal source and as a low-power transmitter. It has an internal power supply, a modulator, a frequency control, an output attenuator, and a means of measuring the frequency on which the oscillator is operating.

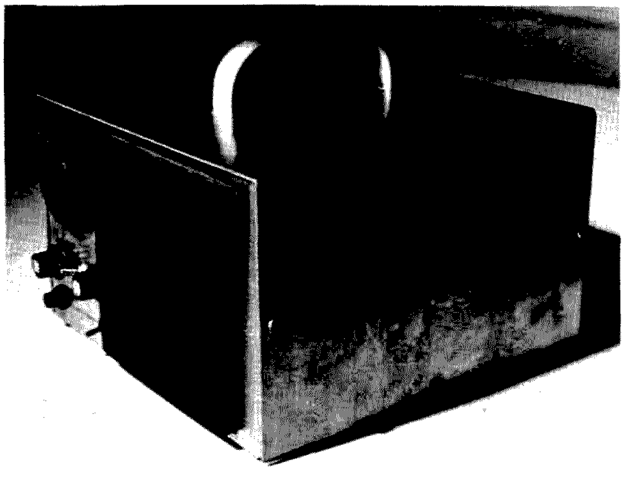

An X-band signal generator/transmitter, klystron oscillator power supply, and all components required.

A klystron tube is used because I had it in the shack. A Gunn diode oscillator could be substituted without too much trouble, although the modulator would have to be considerably modified. Klystron tubes are still found on the surplus market. These tubes, for the most part, are the type which were used as receiver local oscillators. The 2K25, also known as the 723a/b, sold for as little as 50 cents and is still available, as is the BMI series. The 2K25 makes an excellent signal source, but it must be operated upon to get it in the 10.5 GHz amateur band. The BMI series uses a heated bellows to tune to the frequency desired; the bellows heat up, expand, and change the cavity resonance. It therefore is limited in its desirability because of the attendant tuning/stability problems. I was lucky enough to find a Varian X-13-B, which tunes through the band of interest by adjusting the reflector voltage and fine tuning the cavity with a micrometer barrel which is attached in a manner that allows the cavity to be distorted via pressure exerted from the barrel.

The description of the operation of this and many other fine signal sources can be found in the references given at the conclusion of this article, so I will address myself to the business of construction of the signal generator. The choice of the tube must be yours, but this article will be centered around the 2K25 klystron because it is the most easily acquired tube. The price of this tube is still within the means of the amateur, even for a new one. It is, of course, no longer sold for fifty cents, but what is these days?

The signal generator/transmitter is composed of five sections: power supply, modulator, oscillator, attenuator, and rf indicator. In the set to be described here, a transmitting horn is incor-

porated into the same chassis. This can be omitted if you wish. The output of the generator can then be terminated in an output flange.

The power supply is very straightforward, consisting of a full-wave rectifier and filter designed to be free of ripple. It consists of two sections. The main supply supplies +300 volts at 75 mA. A capacitor input filter choke capacitor combination is used in this supply. The second supply is for the reflector of the klystron, which also requires good filtering, but, since the drain on this element is in the microampere region, a simple RC filter is used. Heavy filtering is used on each section to improve on the short-term stability of the klystron oscillator, which is voltage-tuned. Vacuum-tube regulators could be incorporated to improve upon this last feature but would not greatly reduce the drift in the oscillator tube, which is also temperature-sensitive due to the cavity construction. This idea was not attempted and is not recommended unless the added expense is your bag.

The modulator consists of a single transistor amplifier, which will give more than adequate modulation. The reflector of the klystron is modulated by the amplifier, and, since the reflector current is very small, equally small modulating currents are required. For the most part, the modulation will be FM, depending upon how hard the tube is pushed. A panel control to determine the modulation level has been incorporated.

Perhaps the part of the unit most difficult to construct will be the klystron tube mount, the level attenuator, and the rf output detector which is used to determine the output level. This group of components is constructed on one single piece of waveguide. No machine shop work is required. All of the work was done at W1SNN with hand tools in the cellar workshop.

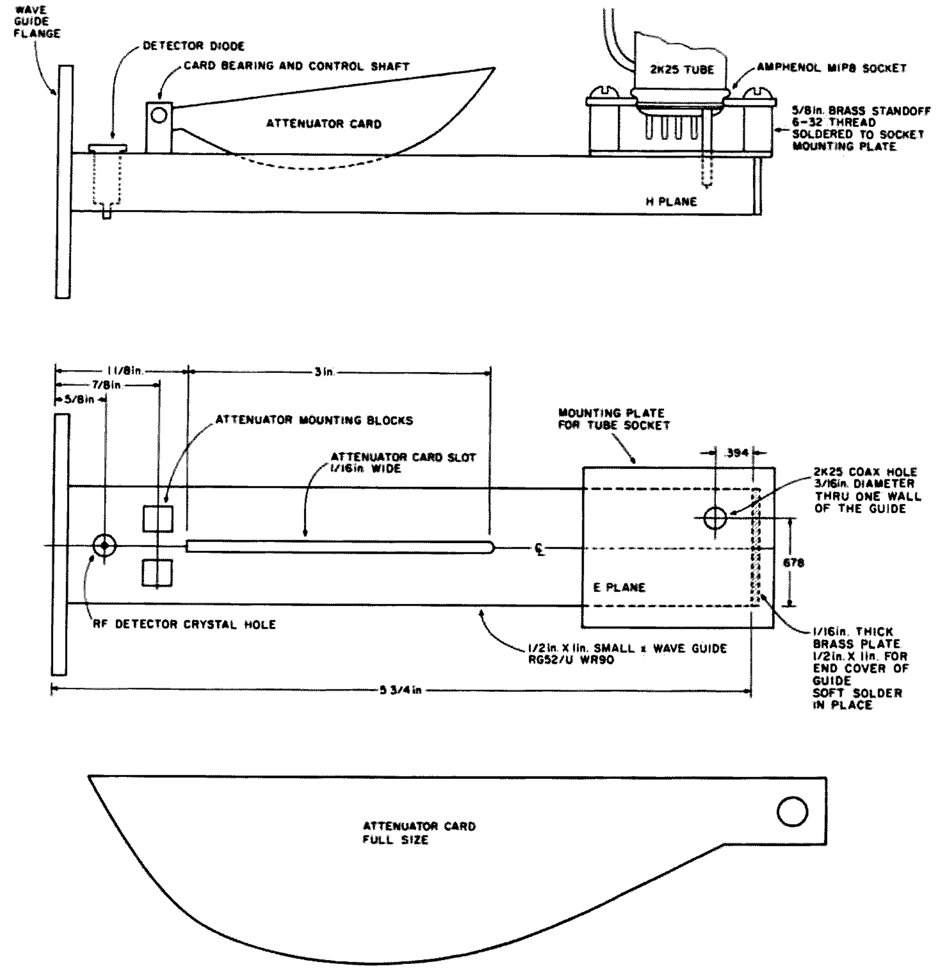

Fig. 1. Waveguide tube mount for the 2K25 klystron attenuator and rf level detector.

The first part of the rf assembly will be the construction of the attenuator. It is a "flap" attenuator, consisting of a section of resistance card that dips into the waveguide through the center of the E-plane. These attenuators were common on the surplus market, and, if one is available to you, by all means use it. The attenuator at this station uses a right-angle gear drive so that the control dial can be conveniently located on the main panel. It may be brought out of the side of the chassis, if you prefer.

The rf indicator consists of a crystal detector mounted near the output end of the waveguide. A potentiometer and a microammeter connected as a voltmeter to the crystal complete the detector. This equipment may be omitted if you prefer. It is easily constructed and is very useful in making comparison and frequency measurements. Its exclusion, therefore, should be carefully considered on the basis of price only.

The antenna incorporated in this set is a pyramidal horn described in an earlier issue of *73*,[4] so the construction details will not be given in this article. The horn antenna can be substituted for with whatever gain standard horn is available, saving a great deal of the construction work.

As is shown in the drawings and photographs, the chassis is packaging for the unit so that it can easily be transported. No blower is incorporated because the klystron does not require additional cooling. However, if a different device is used in substitution for a 2K25 tube, be sure to determine if it requires external cooling.

Let's get on with the construction of the waveguide assembly. Acquire a six-inch section of waveguide. This is a little longer than required, but, by the time the ends are squared off, it will be just right. First, with a machinist's square, mark

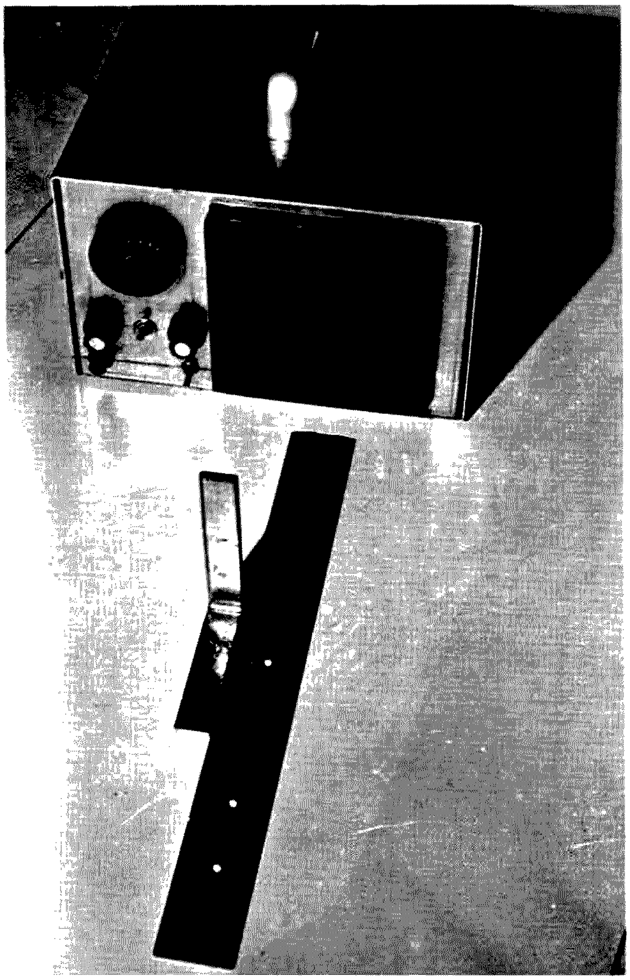

Frequency measurement—not really the hard way.

off each end so that the scribe lines will show intersecting marks on all sides of each end as square corners. The distance between these should be 5¼ inches. Cut the ends carefully with a hacksaw on the lines. File each cut smooth. Remove all burrs, and clean these cuts so that they may be soldered. Steel wool or sandpaper should be used for this purpose.

This first pair of cuts to the guide determines the overall length and the position of the waveguide coupling hole for the klystron. Be sure that the length is that which is specified in the drawings, or you may have difficulty acquiring full power output from the klystron.

Next, lay out the line through the E-plane center of the guide which will be cut as a slit 1/16 of an inch wide. This slit allows the piece of resistance card to enter the waveguide. To cut the slit carefully, center punch ten places in line on the centerline so that the punch marks are very close to one another but not touching. Then drill ten holes with a number 43 drill. By careful manipulation of the drill, these holes will be in line and can be opened to start the slit. A hacksaw blade can then be inserted in the cut and the slit further lengthened to 3 inches. This sounds like a lot of work, but once the holes are in place, it goes very fast. When the slit has been completed, insert a flat jeweler's file, and smooth file the cut, removing burrs. Be sure the burrs that extend into the waveguide are removed.

The next hole to drill is the crystal mount for the rf output detector. Actually, it consists of two holes. The drill should go through both walls in the E-plane. Use a 1/8″ drill. When this operation is completed, the hole on the same side as the slit should be opened up to 5/16″, which will accept the large end of a 1N23 crystal.

The remaining 1/8″ hole should be fitted with a small piece of 3/32″ brass pipe to fit the tip of the crystal. The pipe can be soldered to the waveguide with soft solder after it has been determined that the alignment of the holes is true. Use a crystal to prove this point. The 3/32″ brass pipe can be obtained at a model shop.

To mount the crystal for the level detector, first place a 1/4″ lug on the crystal body and slide it up to position on the large end. It will come up snug against the flange. Bend the lug so that it can be soldered. Now fit a 1/4″ fiber shoulder washer on the crystal body, snug against the lug. Be sure that the shoulder faces the tip end of the diode. Lay this assembly to one side until all soldering is completed.

The attenuator mounting consists of two 1/4″ square blocks 3/4″ high, soldered at the position located in the drawing so that they straddle the attenuator slot. A 1/8″ hole is line-drilled through the sides of each block, which then can be fitted with a small axle for the attenuator card. The card is then epoxied to the shaft. A 1/8″ to 1/4″ coupling is attached to the axle so that a control shaft which fits a conventional dial can be added.

When this job is complete, solder a 1/2″ x 1″ plate over the end of the waveguide which is closest to the tube socket for the klystron. On the opposite end, solder in place a UG-39/U waveguide flange.

To complete the klystron mounting, it will be necessary to modify an octal tube socket to fit the klystron tube. Inspect the tube, and note that it has a small piece of coaxial cable made of metal tubing protruding from the pin end of the tube. One end of the coaxial cable has a small length of Teflon™ covering a short section of the inner conductor of the coax. This is the coupling antenna used to inject the rf output of the klystron into the waveguide. The coupling depends upon the location of the entry hole in the wall of the waveguide and the depth that the antenna extends into the waveguide. The octal tube socket should have a mounting assembly attached to it. Usually it is held in place with a spring washer or is molded in place. The specified socket is still listed in catalogs, since tubes have not completely disappeared from the scene. Choose a socket, and remove the contact from pin 4. Open the pin hole to accept and freely pass the coaxial output of the klystron tube. Some sockets will have a hole large enough and will not require modification. The socket used at W1SNN is an Amphenol type MIP8.

The tube socket is mounted to a small plate approximately 1-1/2″ square. Solder two 5/8″ threaded bushings in a position that will allow the antenna probe of the klystron tube to clear the hole in the waveguide wall intended for it. A similar hole will have to be added to the mounting plate. Once the location is determined, which will depend on the socket type, the

plate can be soldered to the waveguide permanently.

The attenuator card can be constructed from a piece of resistance card made for that purpose. It is beyond the scope of most amateurs to try to manufacture this component. Its cost is reasonable and it goes without saying that it should be purchased.

The card material is a resistance material deposited on a backing and affixed to a piece of hard, nonconductive material. It acts as an absorber of the microwave energy propagated down the length of waveguide. By making the length and depth of the card sufficient, attenuation values that run in excess of 30 dB (with respect to the power level) can be achieved when the card is fully inserted in the guide. A very good impedance match is maintained because of the length of the card. When ordering this material, specify 200 Ohms to the square inch as the resistance value. If you are lucky, you may still find this on the surplus market. In the event that you can't find it, sources of supply are listed in the references at the conclusion of this article.

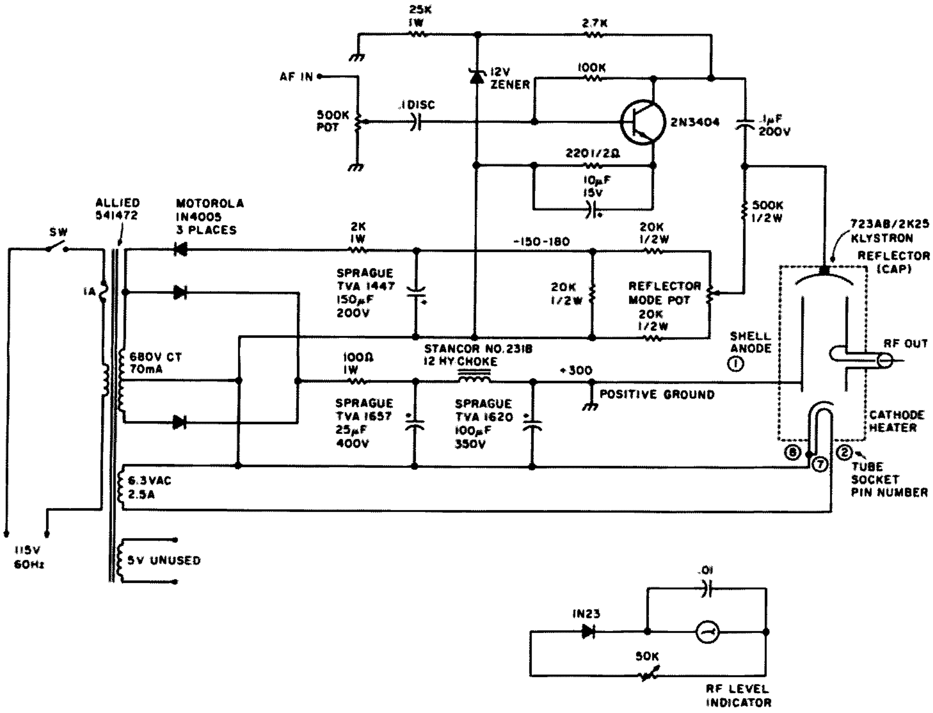

Fig. 2. Klystron power supply and modulator.

To cut the resistance card, simply scribe the outline as shown in the drawing, being careful not to disturb the surface of the card. Then, with a sharp knife, cut through the scribe marks. When the cutting process is complete, file the edges smooth and to the contour shown in the drawing. Departure from the shape shown will cause the attenuation rate to bunch up near the lower levels. The card is quite thin, but not as fragile as it appears. The card should clear the slot as it enters so that wear on the resistance material will be nonexistent.

When all of the waveguide work has been completed, install the components, making sure that the tube socket wiring is completed before installing it. Then decide what kind of cabinet or container you will use, if you decide not to use the one shown in the drawings. Make clamp mountings for the waveguide, as shown, and construct the power supply and attenuator control. The meter and level setting for it can be installed, and you will be ready for testing after a slight modification is made to the klystron bellows.

In order to put a 2K25 klystron tube on frequency in the 10 GHz segment of the amateur band, it is necessary to raise the operating frequency above the normal range of the tube. It is quite simple and does not require excessive modification to the tube.

Simply rotate the square brass tuning control, which is fastened to the tuning strut, full clockwise until the strut opens to approximately 3/16". This action loosens the bellows so that it can be distorted to the higher range position. Now, with a pair of longnose pliers, loosen the bellows nut and back it off to the top of the adjusting screw, which is the coarse adjustment. The nut will loosen to the top of the screw, which is about three threads more than those engaged, and will be in view before the adjustment is made. After backing this nut to the new position, tighten the bottom nut to bear against the bottom of the same coarse adjustment. Now turn the square brass tuning control counterclockwise, and tighten the bellows.

Install the klystron carefully into the socket, making sure that the antenna probe slides into the hole in the waveguide so that it just exposes the end of the coax.

Mount the waveguide components into the cabinet, or whatever your choice of chassis is, so that they are free of vibration and accessible for the preliminary adjustment. The unit pictured and shown in the drawing is complete with a horn antenna, since it is used as a transmitter. It makes a fine portable setup for testing waveguide and other components, since the horn is easily removed at the flange. In any case, connect a horn radiator to the output of the waveguide.

With the rf level indicator (which should be a 0 to 1 milliammeter connected to the rf detector diode) in place and the level control potentiometer set to half level, turn on the power, and wait until the filament of the tube comes to temperature, which will take about thirty seconds. Snap the dc power switch on, pull the flag attenuator out of the waveguide by adjusting the attenuator control, and slowly adjust the reflector control until the meter shows an indication. The level may go off scale, so increase the potentiometer setting and continue ad-

justing the reflector control. Three positions on the reflector control will cause the indicator to rise sharply as you "tune" through the klystron's modes of operation. Each of these modes will electronically control a small deviation in frequency of about 100 megahertz, so get used to how these modes occur, and become acquainted with the level potentiometer setting for midrange for each mode. Now exercise the attenuator control, and note that the output level can be raised or lowered to completely control the rf output.

Once you have familiarized yourself with the operation of each control and the way the klystron acts, it will be time to set the frequency. If you have a waveguide frequency meter which is calibrated, choose one of the reflector modes— preferably the middle one—and adjust the control for the "middle" of the mode. Adjust the attenuator so that attenuation is minimum and connect the wave meter to the output flange. Adjust the wave meter for a reaction on the wave meter indicator. Track the wave meter with the reflector control to determine where 10.200 GHz falls. If you find that you must move to the third mode, readjust the two nuts on the tuning strut, as well as the brass tuning block, starting with the block first. Once the frequency is located, carefully make a mark on the reflector dial for this frequency. Then find the limits of the band, and mark it again.

If you do not have an X-band wave meter at your disposal, you will have to resort to the method that the early microwave people used. It is as accurate as you use it and will certainly locate the band limits for you.

To set up for this operation, you will need a small plastic ruler which is marked off in metric measure. A small piece of aluminum one-inch wide and bent in the form of an L will serve as the reflector. Set the signal generator/transmitter up with a horn on a wooden or nonconducting surface with a clear area in front of the horn antenna. Measure a distance of 15 cm from the lip of the horn. At this point and through the axis of the horn, lay the meter ruler. Tape it in place so that it is firm and will not move. The ruler is the calibration source and should be treated as the standard for these measurements.

Now that the ruler is fastened to the work surface, place the L-shaped bracket next to the cm side of the ruler. Tape a pin to the bracket so that it points to the calibrations on the ruler. Fasten the pin so that it won't move. Now proceed to fire up the generator as before, and locate the middle mode by adjusting the reflector potentiometer so that the mode is peaked on the rf indicator meter. Move the L-shaped bracket parallel with the ruler so that it bears on the ruler. Move the bracket toward the horn and away from it a few times, and notice that the rf indicator fluctuates rapidly as you move the bracket. It will also fluctuate as you move your hands or any other object in front of the horn.

Now move the L-shaped bracket, parallel to the meter ruler, toward the horn from about the middle of the ruler. Remember that your hands will influence the readings, so try to hold them flat to the work surface as you move the bracket through a minimum and a maximum reading on the rf indicator. Be sure to note the reading on the ruler; the distance between these two points is one half the wavelength of the transmitted frequency. Make a series of these measurements to determine that they repeat, recording the distances. You already know how to convert wavelength to frequency. All you have to know is that the physical free space length is .2997 to .2855 cm for the frequency range of 10.000 to 10.500 GHz. As before, if the klystron does not operate in these frequency ranges, it is a simple matter to change the coarse adjustment, as previously described.

If you want to know more about the way to measure the wavelength on which you are operating. I suggest you find an old *Radio Amateur's Handbook*. The issues prior to 1955 had a good amount of data on lecher wires.

Since a lecher line is really an open wire transmission line, attention must be given to the correction in length, which is usually foreshortened by capacitance and inductance between the wires. Although this factor is small, it is there, and it affects the accuracy of the measurements. In the free space case, which is the method I use, there will be no problem with the foreshortening effect. Simply find the two points where the reaction takes place, measure the distance between them, and you have the measurement as a half wavelength. As you can see, the measurement must be very carefully made. All components in use must remain stationary except the L-shaped reflector. If this part could be moved with the precision of a metric micrometer, the accuracy would be improved far beyond your needs. It is important that you establish the band edges, since other services surround you; the police operate at 10.525 GHz ± 25 MHz, and you don't want to interfere with the police radar frequency, do you?

The modulator in the signal generator/transmitter is a single transistor amplifier that is used to amplify a microphone, audio oscillator, or whatever you decide to modulate with, except video. For the most part, modulation is FM. Deviation is dependent upon the setting of the gain control.

You may want to investigate the possibilities of using a Gunn diode oscillator in place of the klystron. There are several available, complete with horns, if you have the money, or you could use the unit described in this magazine as the "Mobile Smokey Detector."[3] It's as easy to build and test as is most microwave gear found in *73*.

If you decide to construct this unit and use it on a field day for another band multiplier, look for me on 10.250 GHz. A parabolic reflector six feet in diameter makes the output of this unit formidable. The QRM up there isn't too bad from other amateurs, but it is quite often experienced from radar. The band is a lot of fun to work on—hope to see you there. ■

References

1. *The Microwave Engineer's Handbook*, 1963, Horizon House, Brookline MA.
2. *Technique of Microwave Measurement*, Radiation Laboratory Series, Volume 11, Chapter 2, "The 723 Family of Reflex Klystrons."
3. "Mobile Smokey Detector," Stirling Olberg W1SNN, *73 Magazine*, Holiday, 1976.
4. "A Brass Horn For X-Band," Stirling Olberg W1SNN, *73 Magazine*, March, 1978.
5. The attenuator card material is available from these manufacturers: Filmohm Corp., 48 W. 25th St., New York NY; Emerson and Cummings, Inc., 869 Washington St., Canton MA; Film Resistors, Inc. (HyTronics), 242 Ridgedale Ave., Morristown NJ.

Neil McAlister
465 Hale Street
London, Ontario
Canada N5W 1G6

Shock!!!

—*what to do when Thor's hammer falls*

For thousands of years, man has respected the awesome and sometimes deadly power of lightning in myths, legends, and religion. The classical Greeks saw in lightning the anger of Zeus; the fierce Norsemen attributed it to the hammer of Thor; the ancient Hebrews recognized it as a demonstration of the wrath of God. On the other hand, man-made electricity is fairly new. The first medically-recorded death due to man-made current was in 1879. Nowadays, fatalities through electrocution outnumber those due to lightning 5 to 1. Every year, about 1,000 Americans die because of accidents involving electric current. Many more are injured, sometimes severely. Some of these tragedies could have been prevented altogether. The tragedy is compounded because appropriate first aid might have saved some of the unfortunate victims.

What happens in an electrical accident? As electricity courses through the human body on its way to ground, it produces several serious consequences. The first is burns. There are two kinds of electrical burns. So-called "flash burns" occur on the surface of the body and are caused by the intense heat of arcing electricity. When an electrical accident causes a fire, this can burn an unconscious victim also. About 5 percent of all admissions to special burn treatment units in the United States are caused by electrical accidents. Surface burns are the ones which we can see. They may leave bad scars, but often they are not the worst burns caused by electricity. The greatest damage may occur inside the body, where the heat generated by electrical current causes muscles, bones, nervous tissue, and vital organs to literally fry. Some victims who do not die immediately succumb later to kidney failure or to massive infections in destroyed tissues. If a victim survives a serious accident, a good deal of dead tissue must sometimes be removed surgically. Even years after an electrical accident, problems may remain: A victim may never recover nervous system functions which are wiped out by a large shock.

Electric shock can interfere with the electrochemical operation of the heart, causing it to stop beating. This situation is, of course, deadly. High-voltage shock sometimes destroys or severely impairs that part of the nervous system which controls breathing, with the result that the victim cannot breathe on his own. This, too, kills.

In an electrical accident, people can also sustain severe injuries not directly attributable to electric current. If a person falls from an antenna or ladder, for example, he can get fractures. Those of the neck and spine may be quite dangerous.

Which shocks are the worst ones? That depends on several capricious factors. As a rule, high voltage is more dangerous than low voltage, but this is inconstant. People have survived very large shocks; conversely, some have died from surprisingly small ones. The duration of a shock is an important factor affecting survival or injury. In this respect, these accidents are particularly vicious because electricity causes muscles to go into spasm (or *tetany*), and this sometimes prevents a victim from letting go of a live source. Perhaps the least predictable considerations are the grounding of the victim and the conductivity of his skin. Whether the skin is sweaty or dry can mean the difference between life and death during an electrical accident. Since it is the flow of current through the body which produces injury, the location to which the current is applied has a profound effect on the degree of damage. A shock traveling from head to grounded feet traverses the whole body and all its vital parts, often with disastrous consequences. On the other hand, a shock of equal magnitude traveling only from ankle to foot will likely hurt that foot but leave the rest of the body relatively intact. Finally, the physical condition of the victim undoubtedly influences his ability to withstand an electrical shock.

Because many of the circumstances affecting the severity of an electrical accident occur unpredictably, it is impossible to guess outside the most general guidelines the full potential danger in any given situation. The moral is simple: All electricity deserves respect.

Who is most at risk? As might be expected, occupational hazard is an important factor. The greatest number of deaths from electrocution occur among electricians and linemen. Among nonprofessionals, the most common circumstance leading to fatal injury is the do-it-yourself erection of antennas or masts in the neighborhood of high-tension lines.

Everybody knows that high voltage is dangerous, and so we all know enough to be

careful with it. However, many are not aware, or do not believe, that even regular household current has occasionally killed or injured people. One cannot overemphasize the importance of caution to all people who work with any kind of electrical devices.

Although electronics hobbyists and radio amateurs are more aware of the hazards than most people, accidents do occur even among this select group. I knew a ham who was nearly killed years ago by a particularly sneaky accident. One night, a storm felled some old bare power lines onto his antenna. When he attempted to make some changes at the receiver end the next morning, he received more than he bargained for — a dreadful shock which hospitalized him. There is little defense against insidious dangers such as this, except suspicion. Build antennas securely and as far away from power lines as possible. Inspect antennas regularly after heavy weather. Ground equipment effectively so that unexpected current will flow through the ground cable, instead of through you! These are elementary cautions which most of you would consider obvious — but the penalties for ignoring them can be merciless.

Emergency Resuscitation

For any number of reasons, a person may stop breathing, and/or his heart will stop beating. Electrocution is the case in point, but some equally valid examples are heart attacks, drowning, poisoning, suffocation, and severe automobile accidents. The point is this: Unless breathing and circulation of the blood are restored quickly, accident becomes a sudden and unexpected death. Until recent times, nothing could be done in these circumstances. Today, however, ordinary people can sometimes work seeming miracles through the techniques of emergency resuscitation. "Rescue breathing" restores respiratory functions to a victim. When this technique is combined with artificial circulation of the blood, the procedure is called "Basic Life Support," "Cardiopulmonary Resuscitation," or CPR for short. Occasionally, when someone witnesses an accident, only rescue breathing is needed. In unwitnessed accidents, however, when rescue is not immediate, full CPR is almost always required.

CPR is an exact discipline, and, in unskilled hands, it has its own dangers. However, it can be learned by people in all walks of life. The following points are an introduction to these techniques, but the *only* way to really learn emergency resuscitation is by practicing it on a special mannequin under the guidance of a qualified teacher. More on that later.

If you should come upon an unconscious victim, take immediate action to summon help, and assess the patient for the "ABCs of emergency resuscitation."

1. Do not waste time. Do not leave the victim, but call at once for help, because you will need it. Send another person to call an ambulance. If no one else is around to hear you call, proceed on your own, but *do not leave the victim.*

2. Never "resuscitate" anyone who does not need it! People can lose consciousness for many other reasons besides respiratory and cardiac arrest. Before going ahead with each step of the "ABCs," assess the victim quickly but carefully to see if it is necessary to proceed.

"A" — Airway

Be sure that the victim has

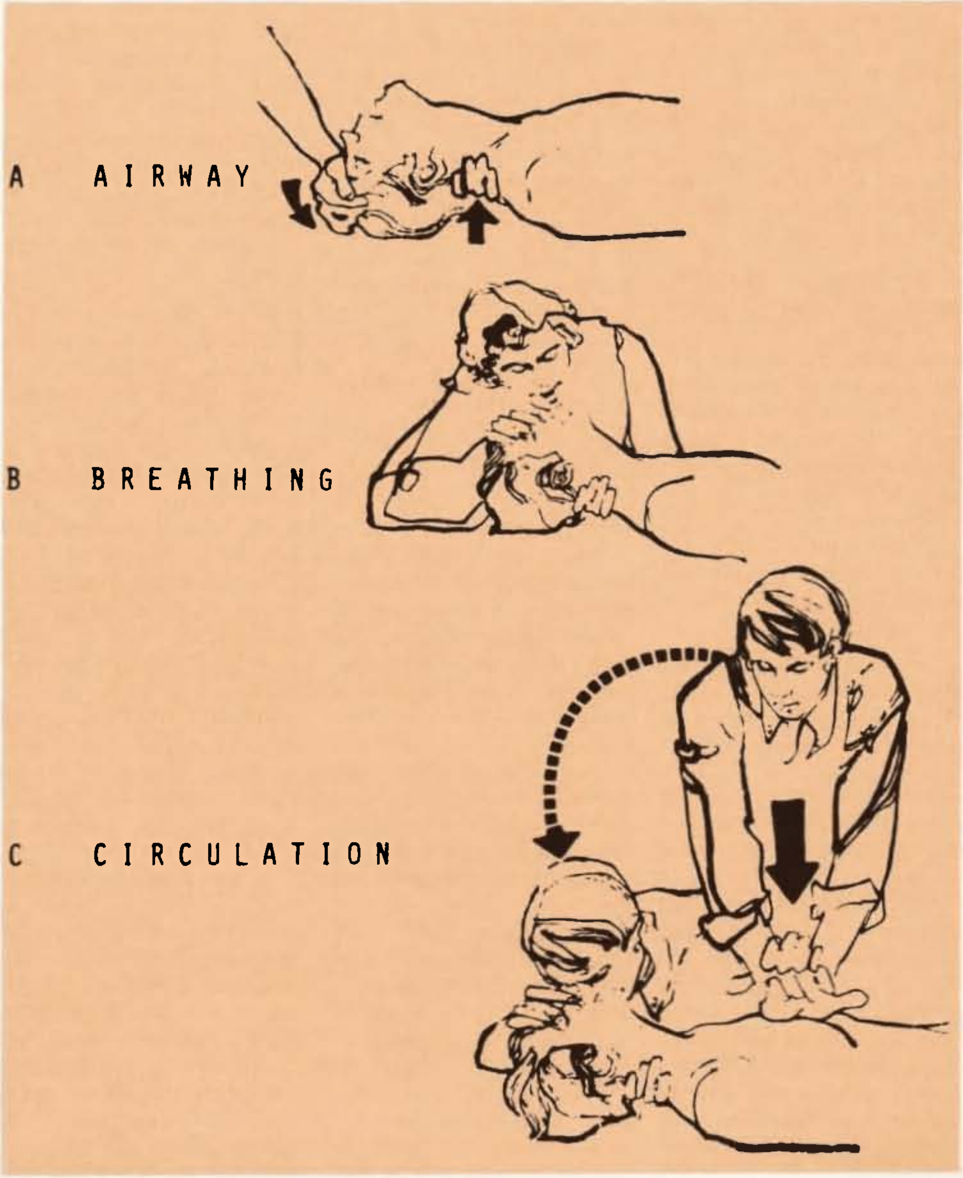

Fig. 1. The ABCs of Basic Life Support. Courtesy of the American Heart Association and the Ontario Heart Foundation.

1. Do not panic. Panic will not save the victim; it may get you hurt.
2. If the victim remains in contact with live current, switch it off. If this cannot be done quickly, remove the victim with a wooden pole or some other insulator. *Do not touch him directly.* Some would-be rescuers have met a sorry end in just that way.
3. If there is immediate danger of fire, get yourself and the victim (who may be confused or unconscious) to a safe place quickly.
4. If the victim is unconscious, proceed as follows:
5. Shout out for help. Send someone to call an ambulance. *Do not leave the victim* to do these things yourself because every second counts. If no help is available, you will have to work alone to save the victim until help eventually arrives. *Get to work immediately!*
6. "A" — Airway. Clear and straighten the victim's airway.
7. "B" — Breathing. If necessary, apply rescue breathing.
8. "C" — Circulation. If required, perform Basic Life Support.
9. Do not stop for anything until victim recovers, help arrives and takes over, or you are actually exhausted.
10. Do not move the victim once CPR is begun, unless you have training in advanced techniques not discussed here.
11. When qualified help arrives, the victim can be transported to medical help.

Table 1. First aid for cases of electrical shock.

a clear airway through which he can breathe. Use your senses: If you hear difficult breathing sounds (as if the person is strangling), his airway may be partially blocked. If there is no breathing, it may be that his airway is totally blocked.

1. Straighten out the victim's airway, so that he can breathe most easily.
   (a) Tilt the head back, keeping one of your hands under the back of the victim's neck. Be very careful of possible fractures of the neck or spinal injuries due to the shock.
2. Check the mouth for foreign bodies, including false teeth. If there are any, remove them.

Having performed these maneuvers, as shown in Fig. 1, you will enable air to enter the victim's lungs easily.

"B" — Breathing

Is the victim breathing on his own, now that the airway is clear?

Watch the patient's chest to see if it rises and falls. Look to see if the victim has turned blue around the lips. Listen for breathing sounds. Feel for escaping breath from the nose and mouth. If your examination shows that the victim is *not* breathing, only then is rescue breathing required.

1. With the airway straightened, as described above, pinch the nose.
2. Seal your mouth over the victim's and breathe in 4 fast puffs, releasing the seal momentarily between them.
3. Commence rescue breathing at the rate of once every 5 seconds. Watch the chest rise and fall, to make sure that air is getting into the lungs. Remove your mouth fully between breaths.

Rescue breathing is used alone only when a victim has stopped spontaneous breathing, but when his heart is still beating.

"C" — Circulation

When the victim's heart has stopped, too, full cardiopulmonary rescuscitation is required. But how can you be sure that the heart has stopped? It is dangerous to proceed to this step "C" unless you are sure the heart is not working! Feel very carefully in the groove between the voice box and the long muscles on the sides of the neck for the strong and bounding pulses of the carotid arteries. There is one carotid artery on each side of the neck. If this pulse is present, then the heart is still beating. Forget the wrist! Feeling for the pulse in the wrist is an old wives' tale, because that pulse can be too weak to feel even when the heart is beating properly. But, if there is no pulse in the neck, then there is no effective heartbeat, and full CPR is necessary to save the victim.

If you are all alone (1 rescuer) —

1. Put the patient on his back on a firm surface — the floor, not the bed.
2. Put the heel of one hand on the lower half of the victim's breastbone. Put your other hand on top of this hand, as shown in the picture.
3. Compress the victim's chest 1½ to 2 inches and release, at a rate of 15 compressions in 10 seconds.
4. At the end of the 15th compression, give the victim 2 quick lung inflations (as described under "Breathing"). Then repeat the cycle of 15 compressions and two breaths, 15 compressions and 2 breaths, etc.
5. Make it a smooth action. Half of the time is spent in compression, and half in release. Avoid jumpy, pounding action on the patient's chest.

With 2 rescuers —

1. Position the victim on a firm surface, as above.
2. One person is responsible for rescue breathing.
3. The other rescuer is responsible for external chest compression.
4. The rescue breathing and artificial circulation by chest compression are done just as described above, except that the rates are different. When there are 2 rescuers, there are 5 compressions for each 1 breath. The breaths should be made quickly so that there is no break in the rhythm of chest compressions. The rate of compressions is similar to above.

Whether you are alone or have help, check every so often to see if the victim has recovered. If he groans or his eyes open, recovery is obvious. On the other hand, some patients remain unconscious and immobile even after their own breathing and circulation have returned to normal. Check for this possibility occasionally, since your efforts to resuscitate the victim may succeed.

Don't give up! Most importantly, do not stop for anything, unless resuscitation succeeds, medical personnel or other responsible people take over, or you are too physically exhausted to continue. Hang in there. It could save a life.

Getting Proper Training

Cardiopulmonary resuscitation is a lifesaving procedure, but it is also an exacting one. It must be learned by taking an approved course involving extensive practice on specially-constructed mannequins. Improperly performed, CPR is at the least useless, and, if it is done badly or when not medically required, it is extremely dangerous. Complications of the procedure include fractured ribs, damage to the heart, punctured and collapsed lungs, liver lacerations, and ruptured spleen. This does not mean that one should be afraid to use CPR — an unblemished corpse is no consolation. However, it does mean that one should learn how and when to do CPR properly. CPR is an important new first aid procedure. A standardized training program in Basic Life Support has been developed and is available through the American Heart Association, Red Cross, YMCA, state and local Heart Associations, and medical societies. In Canada, contact the Canadian Heart Foundation, its provincial affiliates, or the Red Cross. Some of these organizations also have excellent illustrated material for public distribution and education. For example, the Ontario Heart Foundation supplied the literature from which the illustration for this article was taken.

Knowledge of lifesaving emergency techniques is like seat belts. We all pray that we will never need to put it to the test. But, should we ever be in a critical situation caused by electric shock or something else, this knowledge could prove itself beyond value. ■

The PVC Portable

—a "go anywhere" 2m ground plane

Lewis Tarnopol WA6RJK
164 South Kingsley Drive
Los Angeles CA 90004

In this article, I want to tell you about a neat little 2 meter, 1/4-wave antenna that a good friend of mine, Rick WB6TAE, designed for me. It's made out of PVC pipe tubing (used for indoor and outdoor electrical and water runs, depending on the local code), which can be obtained at almost any hardware or lumber store. If you're interested in an antenna which costs less than five dollars, read on.

Completed antenna leaning against author's car.

Although my pictures tend to be self-explanatory, let me describe the internal workings of this antenna. One central radiator and 4 ground radials are mounted on a standard SO-239 connector, which in turn is mounted in a 3/4" PVC cap. The cap slips over a convenient length of PVC tubing, and there it is! Your antenna coax is merely fed through the pipe and then screwed onto the SO-239 connector. You can then permanently glue the cap to the pipe with PVC cement.

Construction

Building this antenna is a cinch, and assembly time is less than an hour. You will need: one 3/4" PVC cap; one 7' length of 3/4" PVC tubing, any color; 9 feet of 12-gauge galvanized wire (it's a few inches more than you'll need, so you can make mistakes); 1 SO-239 connector; and PVC glue or epoxy.

Start by drilling a hole in the center of the cap just big enough for the SO-239 to go into. If you drill your hole carefully (I used a reamer), you can screw the connector into the hole. It will thread itself. If you do go overboard, just plan on using some epoxy or PVC cement to make the mount rock solid. Now cut your center radiator and radials (five 19-1/8" lengths) from the galvanized wire. This length will put you in the 146-147.99 range with less than 1.2:1 swr. This length will also work in the rest of the 2 meter band with only a slight increase in swr. I might add that brazing (welding) rods or coat hangers can also be used, but they will have to be sprayed with Krylon after assembly in order to be weatherproof.

File clean 1/2" from one end of each wire, so a clean solder contact can be made. Now file a nick 1/4" from one end in each of the four wires. Using a pair of pliers, bend these nicked ends 90°, so they slip into each of the four holes in the SO-239. Use a soldering gun in the 100-Watt or higher range and solder the four radials permanently in. Make sure the nuts holding the tip in your gun are tight — it does make a difference. Now solder in the center radiator. Screw or glue this newly-acquired wire thingy into the PVC cap, and there it is. Any length of coax with a PL-259 connector will screw onto your pipe dream antenna. Choose a 7' or so length of PVC pipe and feed the end of the coax you'll be using through it. Screw the 2 connectors together, glue the cap down, and voilà!

You can now carry your pipe dream antenna around like a flag pole, clamp it to your roof or your bike, or do what I did on the 4th of July. I took it

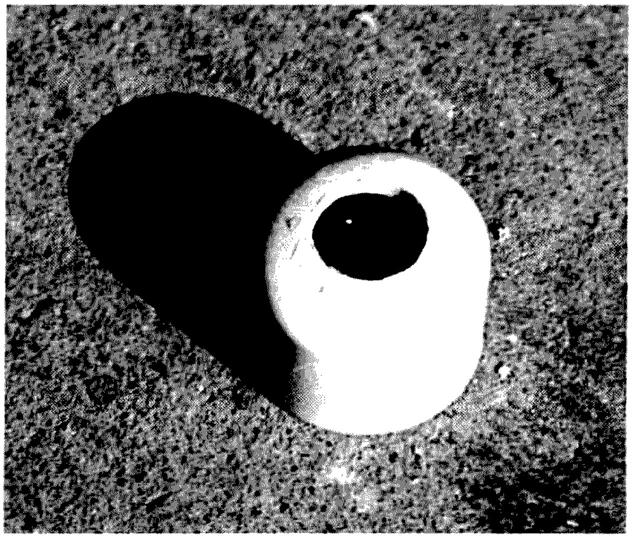

A close-up of the first step...drill a hole in the PVC cap large enough for the SO-239.

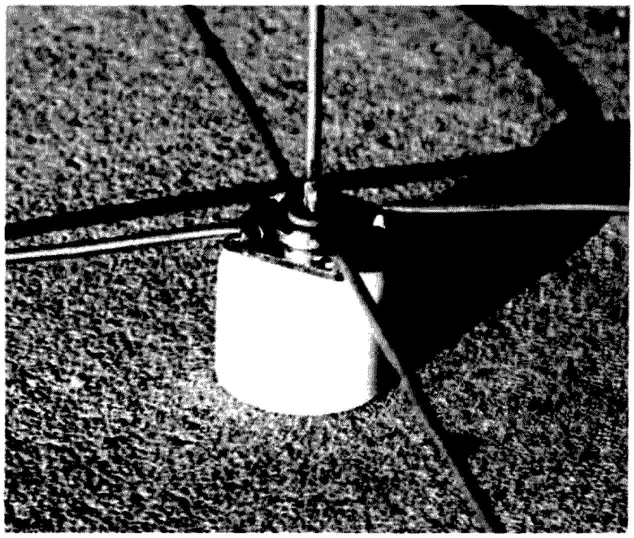

A close-up of the SO-239, with radials and center radiator soldered in place, mounted in a PVC cap.

with me to the beach and pushed it down into the sand, and there it stood as I transmitted—a veritable beacon among the darkness of magnet mounts. And speaking of magnet mounts, of which I own one, this antenna outperformed the mag mount under all conditions. I made tests with each antenna occupying the same spot. I told Rick my results, and he suggested that the ground plane of a mag mount spike is less than perfect, and I have to agree.

In addition to the 1/4-wave configuration described here, a Larsen 5/8-wave antenna coil that screws directly onto the SO-239 can be bought. Change your radiator dimensions to accommodate this coil, and enjoy a 5/8-wave pipe dream. Any way you look at it, this is one pipe dream that won't go up in smoke. ■

The Amazing Mobile Life Preserver

—simple, but effective

Howard A. Goodman W2EVM
71 Mandalay Drive
Poughkeepsie NY 12603

I have both read and heard of several cases where rigs were stolen from locked automobile trunks because the thieves were tipped off to the possible presence of equipment by the usual underdash mounting bracket. Not wishing my two meter transceiver to become another such statistic, I began to search for an alternate way of mounting the rig so that when removed from the dash for storage in the trunk, nothing would remain behind to indicate its former presence. The method to be described, although quite simple, may prove effective in stopping a rip-off before it starts.

Take the original mounting bracket and cut as shown in Fig. 1. Discard the center portion so that two L-shaped "ears" remain. If not already present, add a .173-inch diameter hole to the horizontal portion of each "ear" for mounting to the dashboard. Assemble the "ears" to the sides of the rig so that they point away from each other. Now measure the distance between the holes in the two ears, and transfer this dimension to the underdash location where the rig is to be mounted.

Drill two .250-inch diameter holes through the dashboard sheetmetal, and, using a Pop-rivet tool, attach a threaded insert (USM No. ATPR-8 or equivalent) at each hole location. Installation of rig to dashboard is then completed with two 8-32 thumbscrews of the type used to attach screen inserts to aluminum storm doors and should be readily obtainable at a hardware store or aluminum products dealer.

Removal of the rig for temporary storage is simply a matter of disconnecting power and antenna cables and removing the two thumbscrews. Rig and mounting brackets are removed as one and nothing is left behind to attract potential thieves. For best results, it is recommended that this mounting scheme be used with a removable antenna and standard-issue license tags. ■

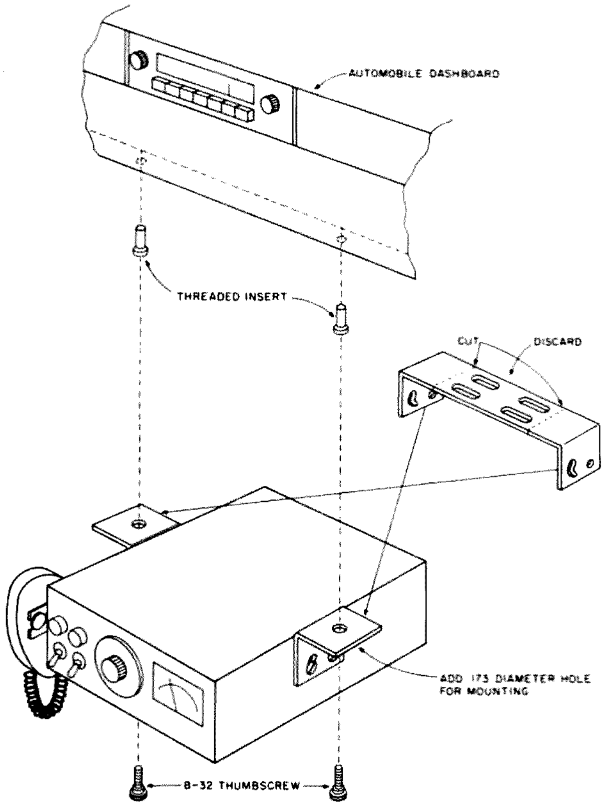

Fig. 1. Mounting bracket modification.

J. H. Everhart N2CX
207 New Jersey Road
Brooklawn NJ 08030

Power Line DX

—(almost) wireless remote control

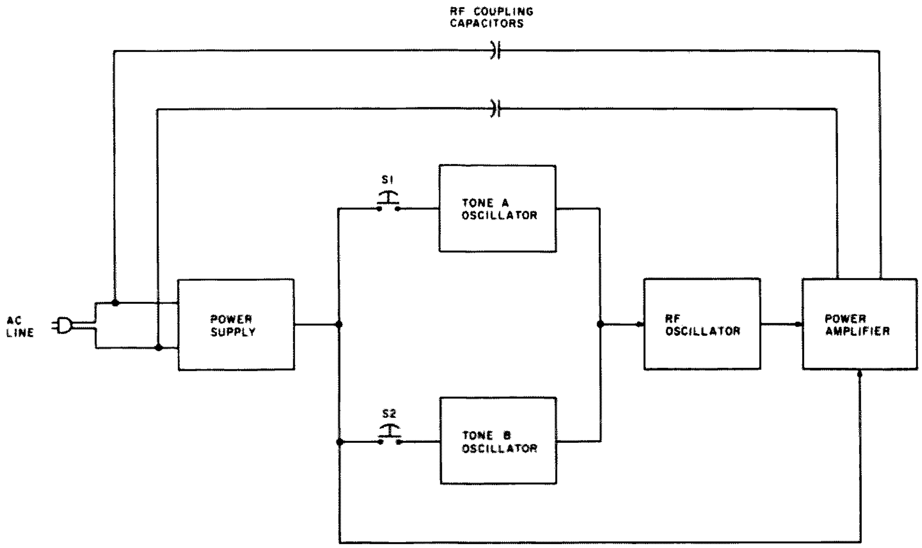

Fig. 1. Transmitter block diagram.

Like many hams, I'm interested in radio as more than just a medium for yakking. Radio frequency signals can be employed for a variety of things far beyond ham-type uses. This article shows how "wired wireless" (WW) signaling can be used for remote control functions.

The system shown here is used presently for a rather mundane function. It controls lighting from a remote location external to a house. However, it could be used to switch almost anything electrical or electronic within or outside a house. The only limitation is that there must be a common power line between the transmitting and receiving circuits. Such functions as controlling an antenna switching relay right at the antenna, turning on and off ham shack equipment from anywhere in the house, or even turning on a coffeepot from the bedroom come to mind immediately. I'm sure you can think of many more applications. Additionally, the circuits included in this system can be used individually for wireless intercoms, burglar alarms, or remote monitors.

Getting Interested

As I hinted above, WW has fascinated me for quite some time. My first exposure was via the so-called wireless intercoms. Naturally, the "wireless" part is not strictly true (just like the British term wireless used for radio). There are interconnecting wires between the intercoms, but no extra wiring. They operate by transmitting rf signals through the 110-volt power lines. Each unit is like a low-power transmitter/receiver combination. Rather than transmitting electromagnetic waves through space via antennas, the signals are conducted through the power line. The useful part of sending signals this way is that there is no need to worry about extra wiring or antennas — the signal path is free.

Aside from wireless inter-

corns, there are numerous other devices using the same or similar techniques. Many burglar alarm installations, where additional wires are awkward or impossible, use WW signaling. Heathkit sells a home alarm system using plug-in sensors and a central unit designed along these lines. Lafayette Radio and others also sell remote-control devices for home appliances that signal via the ac line.

Those of you who live near modern schools may have noticed a funny whistle in your TV or radio at the same time that the school bells ring. This, too, is a form of WW system in which a master control sends coded signals through the school's power wiring to control the bells. Some of them also set the school's clocks exactly with another set of signals.

Large power companies have made their high-voltage long-distance transmission wires serve double duty. They send supervisory and voice communication information on rf carriers along with the low-frequency power. Increasing usage, too, is being made of WW signals for load shedding to turn off non-critical electrical appliances during peak power demand times.

Digging Deeper

Although information about these various systems is usually scanty, I devour any piece of it I can find. Wireless intercoms introduced themselves to me through a friend's request to repair a nonworking pair. The operating frequency (about 200 kHz) was listed on the label, but very little additional information was. Naturally, I also traced out the schematic. As luck would have it, the heart of the matter was an assortment of inscrutable rectangular coils in small metal cans bearing the inscription "Made in Japan."

Similarly, I once ran across some wireless remote controls sold by Lafayette Radio. Tracing out the schematic diagram showed that the basic circuit was extremely simple. The transmitter portion was an ordinary one-transistor oscillator that ran somewhere between 100 and 200 kHz. Two oriental coils were used, one as a tuned circuit in the oscillator and the other apparently as an rf transformer used to match a transistor output amplifier to the ac line.

The receiver also used two transistors and two coils. The first was an amplifier connected to the power line via a link-coupled tuned transformer. Output from this amplifier was coupled through a second tuned inductor to the second transistor. As I remember, the second transistor acted as a detector and power switch to turn on a relay when rf was present at the power frequency.

Heathkit uses a similar system and circuitry for their home alarm system. Each sensor unit (fire, smoke, door switch, freezer warning, etc.) has a special transmitter module consisting of an astable multivibrator operating just below 100 kHz. The multivibrator is fed with half-wave unfiltered 60 Hz dc power, causing the output to be rf pulse amplitude-modulated at 60 Hz. It sends rf through the power line through a power resistor connected to one side of the multi which draws extra current for half of each rf cycle.

In the Heathkit receiver, there are a couple of tuned rf amplifiers (again with special inductors) which feed an AM detector. The detector picks 60 Hz modulation off the incoming carrier. A second detector then senses this 60 Hz audio and turns on an SCR and relay.

Other commercial wireless burglar alarm systems use similar techniques. However, they must be more selective and reliable, so they require better selectivity. Some I've seen use ceramic resonators in both sending and receiving units. These resonators behave like the more expensive quartz crystals used in radio communications. They enhance the transmitters' frequency stability and give the receivers good selectivity to discriminate against noise and stray signals.

Still another class of equipment that uses power lines for signal transmission is home entertainment equipment. About ten years ago, a few record changer/tuner combinations were sold with remote speaker capability. There was a small modulated oscillator connected between the record changer and the power line. The remote speakers each had a small receiver which intercepted the signal from the ac wiring and fed it to an internal audio amplifier and speaker. Although I never learned the circuitry of these gems, I did learn that they used an FM signal between 400 and 500 kHz. In fact, there was also one high-quality system that transmitted stereo via two different carriers between 400 and 500 kHz.

General Characteristics

Now let me summarize a few things I learned while investigating the previously mentioned systems. First, they use the power lines for their transmission medium. Second, they usually use frequencies between 50 kHz and 500 kHz.

Transmitter power levels are usually only a few milliwatts in home use, although the power companies may use several Watts for their long-distance systems. I measured receiver sensitivities of about

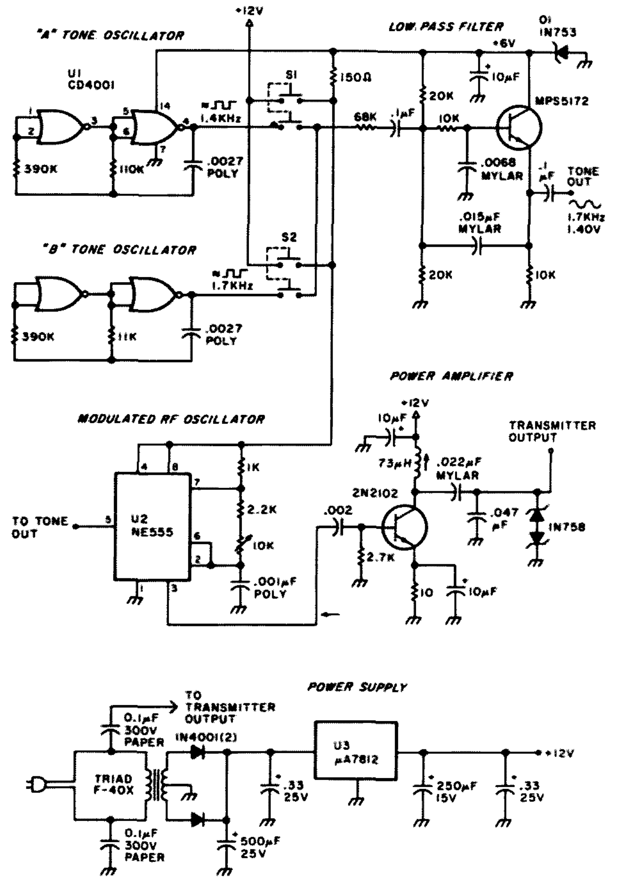

Fig. 2. WW transmitter schematic. Notes: (1) Polarized capacitors are electrolytic or tantalum. (2) Poly means polystyrene. (3) Unspecified capacitors are disc ceramic.

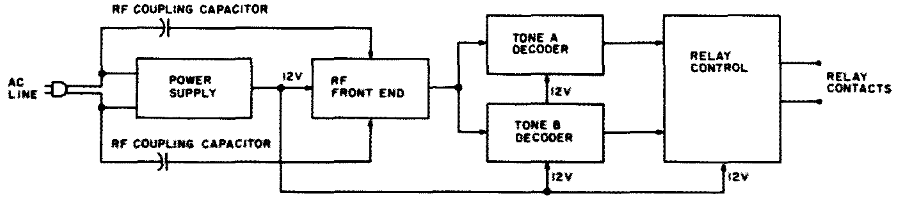

Fig. 3. WW receiver overview.

1 mV for the most sensitive receivers. Simple systems use AM, but FM systems are more reliable and noise-free.

The carrier frequencies in the above range are chosen for several reasons. They are high enough to handle as radio frequencies as far as the transmitters and receivers are concerned, but not so high as to require special circuitry. Very importantly, they are easy to transmit short distances via power line conduction, but are not radiated well because of their long wavelength. Power company pole-mounted transformers attenuate them so that the signals rarely are sent from one circuit to an adjacent one. The receivers usually aren't subject to interference problems, since services in this frequency range are not powerful and they are few in number.

The legality of most WW systems is somewhat hazy. Section 15.4(d) of the FCC rules seems to come the closest in defining such a system as a "restricted radiation device." Then Section 15.7 gives the limits for allowable field strength. Rf level must be below 15 microvolts/meter at a distance of 157,000/F (kHz) feet from the apparatus. They likewise require that no interference occur with a licensed service. And, finally, the equipment must bear a certificate of compliance with Part 15 regulations based on measurements by a qualified technician. Of course, the wording they use is somewhat obscured in "legalese," but what I've said is a pretty good interpretation.

Regardless of the cited regulations, I have yet to find any such "certificate of compliance" on any commercially sold equipment I've seen. Whether this is intentional on the FCC's part or just what the story is I'm not sure. At any rate, if you do any experimentation with wired wireless, be sure not to use too much power or do anything else to interfere with a licensed service. Taking these precautions preserves the intent of the FCC regulations and should keep you from attracting their attention.

The Project Begins

In spite of my continuing interest in and occasional use of commercial WW equipment, I'd never really built my own. About five years ago, I did try a few circuits in an AM intercom, but the results were terrible. I couldn't couple enough rf into the power line to overcome the noise generated by fluorescent lights, dimmers, and electric motors. I was never sure whether the problem was insufficient signal or poor receiver design. Perhaps it was a little of both.

Then about two years ago, a friend asked me to help with a problem he had. Basically, he wanted to control a lamp post at the far end of his driveway, but there were complications. First, there was no power available at the post when the light was off, since the switches were inside the house. Second, he didn't want to run any extra wiring, since it would have to be buried and it is about 200 feet from the house to the lamp post (surgeons don't live on postage-stamp lots).

Because of the no-extra-wire limitation, radio control was an obvious solution, but the distance was rather long for an unlicensed transmitter system. Of course, the lack of available power was a real handicap! I began thinking of a wired wireless transmitter as a possible solution. But this still had two drawbacks. There still was no power to run equipment at the light post, be it wireless or otherwise. More importantly, when the power was off, the transmission path for the rf signal was broken.

Both these limitations, however, were easy to get around. Since the desired control point for the lamp was right at the lamp, a battery-powered WW transmitter could be installed. Nickel-cadmium batteries could be used, connected so that, when power was on to run the lamp, they would be trickle charged. To get the signal around the switch in the house (when off), it was bypassed for rf. Since it was an SCR switch, a series-connected 0.1 uF capacitor and 100-Ohm resistor were connected across its terminals.

The capacitor has low enough reactance at rf to pass the control signal. At 60 Hz, though, the reactance is high enough to limit current flow to about 5 mA. The 100-Ohm resistor protects the SCR from being destroyed by current surges caused by the capacitor.

I built the system, and it worked very well. I seriously doubt though, that many *73 Magazine* readers want or need such a control. So what

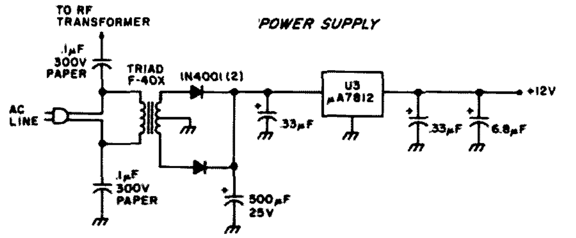

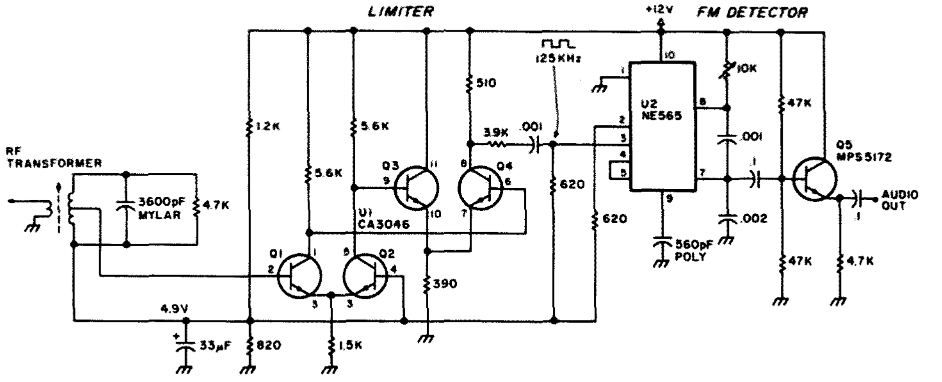

Fig. 4. Rf front end. Notes: See notes (1), (2), and (3) in Fig. 2. (4) Q1, Q2, Q3, and Q4 are part of U1.

I'll describe here is a more general WW control system which need not be dedicated to such restricted usage.

Hardware

Luckily for me, in view of my early WW experiments, I ran across a circuit for a fairly simple transmitter and receiver. National Semiconductor published their AN-146 application note entitled "FM Remote Speaker System." Essentially, the same information also appeared on pages 35 through 40 of *Popular Electronics* in the January, 1976, issue. The article was entitled "A Wireless Audio System for Remote Speakers."

At first, I expected to just copy their transmitter and receiver design with the addition of simple tone generators and detectors for control. So I breadboarded a crude version of each and tested them. They worked fine inside the house no matter how far they were separated. But, when the transmission path included the 200-foot buried run, operation was marginal. Receiver sensitivity couldn't be improved much because of impulse noise, so apparently more transmitter power was required.

For many applications, the National Semiconductor transmitter design is entirely satisfactory, and, if only short-range operation is required, by all means use it. For long runs, however, and where super reliability is needed, the "high-power" design I'll describe is recommended.

I won't belabor all the details of how I finally came up with my version because it would serve little purpose. I'll try, though, to cover the highlights so that you can easily understand how it works. And, with this added information, tailoring the circuits to individual needs is easier, if that's what you want.

Transmitter

The transmitter block diagram is shown in Fig. 1. It features simplicity with enough "guts" to do an effective job. The power supply provides regulated dc to provide isolation from the ac line and stability from varying line voltage. The switches, S1 and S2, serve two purposes. They apply both a tone and dc power to the rf oscillator. When the oscillator is turned on, it applies bias which turns on the power amplifier. The amplifier, in turn, supplies sufficient power to send a signal through the ac line to the receiver.

Fig. 2 is the transmitter schematic diagram. U1 and U2 are CMOS astable multivibrators which are turned on only when one of the control switches is depressed. When S1, for example, is energized, it supplies +12 volts to the zener regulator D1. The switched +6 volts is then used to power both tone oscillators, the low-pass filter, and the modulated oscillator.

At the same time, the square wave output is connected to the transistor low-pass filter. In the filter, harmonics are removed to produce a fairly good sine wave at approximately 1.4 kHz. This tone, in turn, modulates the U2 astable multi. The 555 free runs at 125 kHz and is frequency modulated plus and minus 5 kHz at the tone frequency.

The 125 kHz signal is then applied to the power amplifier. Since it's operated class C, the amplifier produces no output until an rf input is applied. About 200 mW output is produced and is matched to about 30 Ohms by the output tuning network. Various matching impedance levels were tried, but best signal transmission took place when the 30-Ohm design value was used. The two series back-to-back zener diodes provide protection of the output transistor from high-voltage transients on the ac line.

The power supply is a simple half-wave rectifier which feeds a μA7812 (or

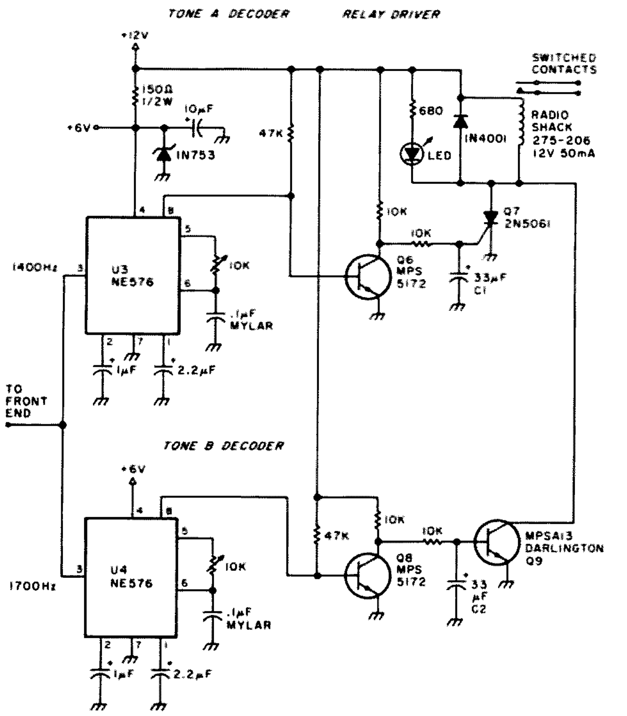

Fig. 5. Tone decoders and relay driver. Notes: See notes (1), (2), and (3) in Fig. 2.

MC7812 or equivalent) three-terminal regulator. Although not necessary except for continuous operation, the regulator is heat sinked for safety's sake. The electrolytic capacitors serve as ripple filters and provide low impedance for correct circuit operation and to keep the regulator from oscillating. The two 0.1 uF, 300-volt paper dielectric capacitors couple the rf signal onto the power line.

Receiver

The receiver is somewhat more complicated than the transmitter. Fig. 3 shows the receiver functional block diagram. A regulated 12-volt power supply feeds all of the circuitry. The rf front end senses the signal, amplifies it, and demodulates it, providing the tone output. The tone decoders then detect the presence of either tone A or tone B. When tone A is present, the A decoder sends a signal to the relay control circuitry to energize the relay. Then, when tone B is sensed, the relay is turned off.

Fig. 4 shows the schematic diagram for the power supply and rf front end. 16 volts dc is dropped to 12 volts by U3, a simple three-terminal regulator. A small clip-on heat sink was needed to protect U3. The front-end circuit is copied from the National Semiconductor circuit almost intact. Input coupling and selectivity are determined by a single modified i-f can — more about it later. The input signal, removed from off-frequency noise, is amplified and limited in the two-stage differential pair, Q1 through Q4, which is contained in the

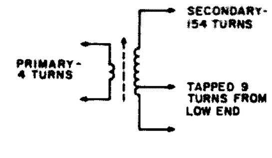

Fig. 6. Construction details for rf transformer. The rf transformer is made from one piece of Radio Shack 273-1383. The original windings were removed and the core rewound with #40 enamel wire, as per the text and this figure.

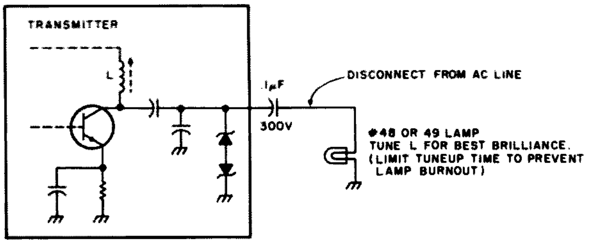

Fig. 7. Remote transmitter tuning setup.

transistor array, U1. The limited signal is then reduced in amplitude by a resistive divider and sent to U2, a phase locked loop FM demodulator. The resultant audio is then coupled to Q5, an emitter follower, which provides a low output impedance.

Next the signal goes to the two tone decoders, U3 and U4. U3 is tuned to 1400 Hz to recognize the A tone, and U4 operates on the 1700 Hz B tone. Presence of the correct tone causes pin 8 of the appropriate decoder to go to ground. If U3 is activated, its output goes low, turning off Q6, whose collector then goes toward 12 volts. When C1 charges sufficiently, SCR Q7 is turned on. Conduction of Q8 turns on the LED to show that an "on" signal has been received. At the same time, the relay is energized, closing its contacts which are used to control an external load. When the A tone disappears, Q7 remains latched on.

Tone B causes U4's output to go low, turning off Q8, which turns on Q9. When on, Q9 shunts current around Q7, turning it off. Then, when tone B disappears, Q9 turns off, causing the LED to go out and the relay to deenergize.

Bits and Pieces

That's most of the system, but a few more comments and suggestions may help you with your WW system. There are several special components used in this project that helped make it successful. The power transformers were obtained at low cost and serve admirably. In a second version of the system, I used some 15-volt, 1-Ampere transformers and bridge rectifiers. 12-volt transformers or 24-volt center-tapped units could give marginal operation with low line voltage. If you use the lower voltage transformers, just be sure that there is at least a 3-volt dc margin above the 12-volt regulator output, or they will not work.

The transmitter's output coil is rather important. Taking a lead from the National Semiconductor application note, I tried rewinding an i-f can to use here. It worked, but results were poor, due to the high dc resistance of the winding. The coil I used was of unknown origin, and I had to remove turns to make it tune. A J. W. Miller type 23A685RPC coil should work as well.

The receiver's input coil is an i-f can modified as per a modified version of the National Semiconductor application note printed in the *Popular Electronics* article, "A Wireless Audio System for Remote Speakers." Here, both the transmitter and receiver coils were obtained by rewinding miniature transistor radio i-f cans. Fig. 6 shows the required windings. Although the original article called for Toko transformers, I found that the Radio Shack 273-1383 worked just as well. To perform the modification, first carefully pull the "guts" of the can out the bottom of the shield. Now unscrew the black ferrite cup from the plastic threaded base. Next, cut off the wires to the solder terminals and remove the fixed ceramic capacitor. You will find that the small bobbin containing the windings is held in place only by beeswax. A little heat and careful prying removes it to strip the old wire off and add the new windings. Be careful not to forget which wire is which while you rewind, or you'll have to redo the job as I did (the first time). When soldering the windings onto the base pins, be careful with your iron. Too much heat will destroy the plastic base.

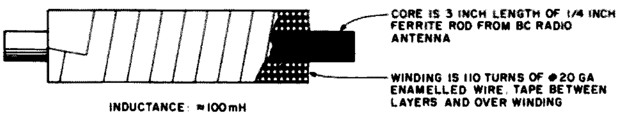

Fig. 8. Rf choke to minimize signal loss in incandescent light.

Tune-up of the transmitter is fairly simple. The only frequency adjustment is for the rf output. A frequency counter is recommended. The transmitter output stage is best tuned up by using a no. 48 or 49 pilot lamp as a dummy load. Connect the transmitter output stage as in Fig. 7, and tune the output inductor for maximum brilliance. A few crude tests of rf injected into the line showed this method to be a good compromise between simplicity and maximum signal.

The tone oscillators have no tuning adjustment, since their exact frequencies are not important. To be safe, check the two output frequencies and be sure that they are at least 15 to 20% apart. If they are too close, the receiver's decoders cannot distinguish between them. Change either the 110k or 91k resistors, should any readjustment be needed.

To tune the receiver, a frequency counter and oscilloscope are suggested. First set up a signal source (the matching transmitter is best) to send a weak signal into the receiver. Connect the scope across the tuned portion of the transformer and tune for maximum signal. To adjust U2, U3, and U4, first short circuit their inputs to ground through a 0.1 uF capacitor, then set their vcos on frequency. Hook up a counter to pin 4 of U2 to read the vco or to pin 5 of U3 and U4 for their oscillators.

In some cases, I found that some low-impedance loads on the power line, particularly high-wattage incandescent light bulbs, caused severe signal attenuation. Usually this doesn't happen, but for long-distance transmission — 200 or 300 feet — lamps close to the transmitter load the signal heavily. To eliminate the difficulty, I placed a choke in series with the offending load. Commercially-available chokes are awfully expensive, but Fig. 8 shows an adequate home brew version.

Parting Comments

A high-performance WW remote control system has been described. Duplication for similar applications should be simple for experienced radio amateurs.

The same ideas can also be adapted for other uses. For example, if long distances aren't involved, the National Semiconductor transmitter circuit can be used with the tone encoders I've described. Or perhaps the remote speaker idea can be duplicated using my power amplifier. In fact, I've been toying with using my remote speaker to monitor my ham receiver from anywhere in the house. Still another possibility is to make a fancy wireless intercom using circuits from both sources.

WW is a very handy transmission technique. I hope that perhaps I've eliminated some of the mystique involved so that other radio amateurs and experimenters can use it for their own purposes. My thanks go to Gary Kirchner WA3YES for the impetus to take on this project. ■

Terry Weatherley G3WDI
16 Beverley Court
Carlton Colville
Lowestoft, Suffolk
England

Ruddy Good Show!

—2 meters in the Mother Country

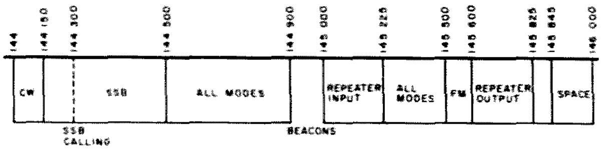

Fig. 1. IARU two meter band plan.

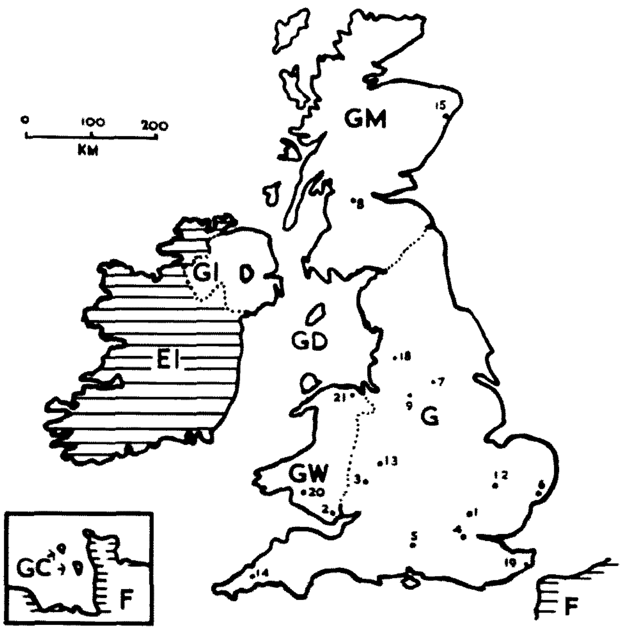

No.	Call	Ch.
1	GB3PI	R6
2	GB3BC	R6
3	GB3MH	R7
4	GB3LO	R7
5	GB3SN	R5
6	GB3PO	R3
7	GB3NA	R3
8	GB3CS	R6
9	GB3HH	R4
12	GB3PY	UHF RB12
13	GB3BM	R5
14	GB3NC	R5
15	GB3GN	R7
18	GB3RF	R7
19	GB3KR	R4
20	GB3WW	R7
21	GB3MP	R6

Fig. 2. U.K. repeaters.

The visitor to the U.K. will find that there are some similarities and some differences between the two meter scene in the U.K. and in the U.S. It is hoped that this article will point to some of these and make the G5--s (reciprocal licenses granted to visitors from abroad are in this series) feel at home on two, even though they are away from home.

The two meter band in the U.K. is from 144 MHz to 146 MHz. Most imported black boxes cover 144 to 148, so this should not be a problem if your rig is crystal-controlled. This article should help you select the right crystals for the trip.

Until about 1973, the two meter band was split up into regional sections, and different parts of the U.K. used different sections. Most worked simplex on AM. You called CQ and listened in your section for a local or in another section for DX. Most equipment was either home brew or converted radio telephone equipment. If you moved, you exchanged your crystal using the crystal exchange scheme organized by the Radio Society of Great Britain.

With the coming of commercial equipment came the International Amateur Radio Union band plan, which was adopted by the U.K. along with others. The regional sections gave place to mode sections, as shown in the band plan (Fig. 1). The repeater scene shows many differences with established U.S. practice.

The growth of repeaters has been very slow and strictly controlled by the licensing authority (the home office). Certain ground rules were laid down quite early on and, by and large, have been adhered to. All repeaters are operated under licenses granted to the Radio Society of Great Britain. The costs involved in building, operating, and maintaining the machines are borne by local groups. All repeaters are open repeaters for all licensed amateurs. The principal purpose of the repeater is to assist mobile stations. All repeaters are vertically polarized for this reason. They are accessed by a 1750 Hz tone burst and will time out after 60 to 120 seconds. Repeater input is 600 kHz lower than the output, and Table 1 lists the frequencies R0 to R9.

The map in Fig. 2 shows the locations and channels of the current repeaters on two in the U.K.

Simplex FM working varies from area to area. In my area (Lowestoft), 145.000 (S0) is used for local working, and this channel is monitored for visitors. In other areas, 145.500 (S20) is monitored. Enquiry to the local club prior to a visit will give local information.

A useful publication covering the U.K. and continental FM scene is the international *VHF FM Guide* produced by G3UHK and G8AUU. This is an annual publication and costs about two dollars from G3UHK (50 Aldbourne Road, Burnham, Slough SL1 7NJ, England).

There are a number of beacons in the band which serve as useful pointers to band conditions. GB3VHF in Kent on 144.150 is an example. This sends its callsign in CW every 60 seconds. Other beacons are located in other areas.

There is some mobile SSB activity, and 144.3 is the calling frequency. Mobile contacts with the continent from the east coast are not uncommon during good conditions.

Portable working from the tops of cliffs or hills is recommended as an interesting pastime. It certainly gives the feel of being rare DX. DX can indeed be worked. During last summer's very good conditions, I worked, from my home in East Anglia using ten Watts to a six-over-six at ten feet, PA0, ON, F, DK, OE, GW, GM, LA, SM, OZ, and, via sporadic E, IT9 and 9H1.

Locations are given using either the name of the town or the QRA locator system (now called the QTH location system). This system locates a station to within a rectangle of 4.5 x 4.6 km. The system divides Europe into rectangles, each covering 2 degrees of longitude and 1 degree of latitude (see Fig. 3). These large squares are indicated by letters. Each large rectangle is further divided into 80 small rectangles, and these are further divided into nine smaller rectangles (see Fig. 4). A station's position can thus be determined using two letters, two numbers, and a small letter. My QTH is thus AM49a. Squares are collected over here, and, again, a visitor touring can suddenly become rare DX.

Visitors to the Norfolk Broads can work mobile on the Broads from their hired cruiser (or private yacht). All visitors will be invited to the local club if they call on S0 when in the area.

Much useful information about licensing can be obtained from the RSGB at 35 Doughty Street, London W.C. 1. Enjoy your visit to the "old country," and I'll see you on two.■

Channel	Input	Output
R0	145.000	145.600
R1	145.025	145.625
R2	145.050	145.650
R3	145.075	145.675
R4	145.100	145.700
R5	145.125	145.725
R6	145.150	145.750
R7	145.175	145.775
R8	145.200	145.800
R9	145.225	145.825

Table 1. Repeater channels.

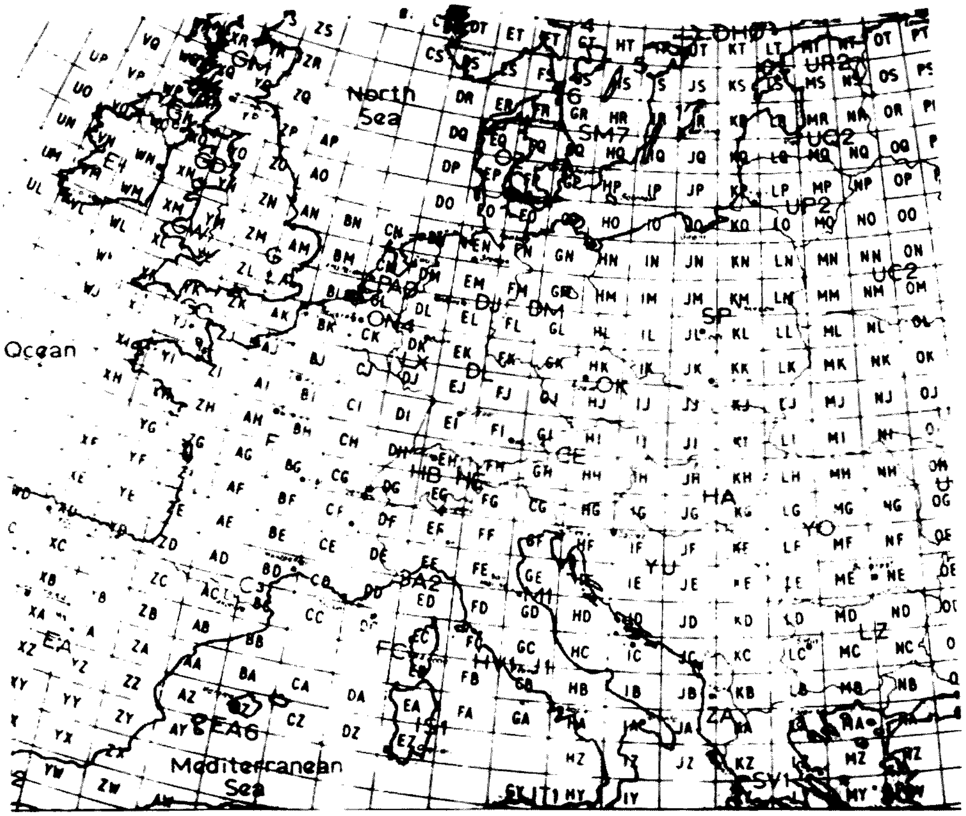

Fig. 3. The QTH location system.

01	02	03	04	05	06	07	08	09	10
11	12	13	14	15	16	17	18	19	20
21	22	23	24	25	26	27	28	29	30
31	32	33	34	35	36	37	38	39	40
41	42	43	44	45	46	47	48	49	50
51	52	53	54	55	56	57	58	59	60
61	62	63	64	65	66	67	68	69	70
71	72	73	74	75	76	77	78	79	80

H	A	B
G	J	C
F	E	D

Fig. 4. Each large rectangle is divided into 80 smaller rectangles which are then divided into nine more.

J. R. Johnson WA5RON
4558 Ave., Apt. #205
Austin TX 78751

Rock Steady

—*touchtone™ stability for Heath's HW-2021*

The HWA-2021-3 autopatch encoder modified for crystal frequency control.

As K4JEM reported in his review of the Heathkit HW-2021 handie-talkie,* the rig is a definite winner, considering its cost and its features, but the accessory touchtone™ encoder from Heath leaves a lot to be desired. I had heard from many of my friends on 2 meters of the troubles that they had encountered trying to tune the encoder's tones on frequency, with or without a frequency counter. Several gave up and sent their new rigs to a Heath service shop to be tuned. The rigs that have made it on the air seem to lack reliability in accurate number dialing, and their owners report that the frequency of the tones varies with time and probably temperature changes as well.

Allen found a problem with the values of capacitors supplied with the HWA-2021-3 kit, but, beyond that, it looks to me like any tone encoder circuit employing NE555 oscillators controlled by resistance-capacitance networks will suffer instabilities due to environmental factors that will make them only marginally suitable for tone encoding. This seems especially true in this handie-talkie application, which one expects to carry outdoors in hot and cold weather, and particularly unnecessary considering the availability of crystal-controlled circuits. Therefore, I expect that there are a number of Heathkit 2021 owners who have installed the encoder accessory but are not happy with it.

I volunteered to build the HW-2021 kit for a fellow ham who had purchased the encoder kit as well. I knew that I didn't care to go through the problems that others had had in getting the encoder to work, nor did I want to build a device for my friend that would be unreliable in the future.

*"Heath HW-2021 Review," S. M. Allen K4JEM, *73 Magazine*, August, 1977, p. 160.

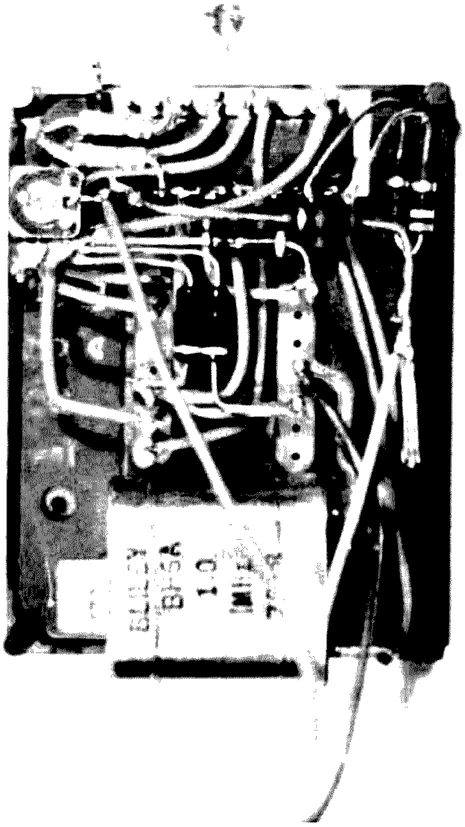

Components mounted and wired on the back of the 12-button keyboard.

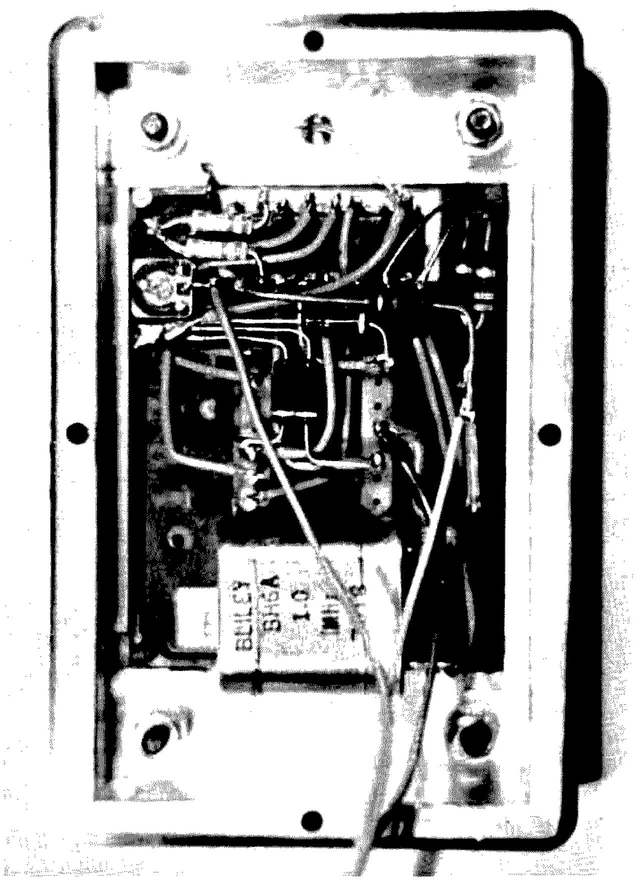

Keyboard is cemented into the plastic case. Metal coating must be removed from inside edge of case for cement to adhere properly.

When the transceiver was finished, I decided to use the HWA-2021-3 enclosure and keyboard, but replace the NE555 circuit with a Motorola MC14410 tone generator. The MC14410 is controlled with a 1000 kHz crystal for more than adequate frequency precision and stability and has enough audio drive for the HT's input circuit.

I wanted to preserve the function of the LED that Heath put on the encoder to let the user know that he is pressing a key (you can't hear the tones) and have a finished product that outwardly appears to be "stock" Heathkit and interfaces with the HT in the same way as the original HWA-2021-3. The modification described is rather extreme, in that one discards the printed circuit board and most of the electronic components that come in the kit. All you save are the plastic case, keyboard, LED, 10k audio level pot, ribbon cable, screws, and perhaps a resistor or two.

The schematic shows the design I came up with to generate tones and light the LED. The circuit draws no current unless a key is pressed, connects to the HW-2021 with the same three wires that Heath designed into their kit, and requires only an audio level adjustment. With a good quality crystal, there should be no problems with tone frequency.

The photographs show how the circuit is assembled on the back of the Chomerics keyboard. Lay the keyboard face down and attach the Motorola chip and crystal with some strong rubber cement. The chip goes at the top, with pins 1 through 8 along the top edge of the keyboard. The crystal (HC6/U size) is cemented at the bottom of the keyboard. Using the upturned IC legs, the crystal pins, and the pins on the keyboard back as tie points, all components are soldered together using

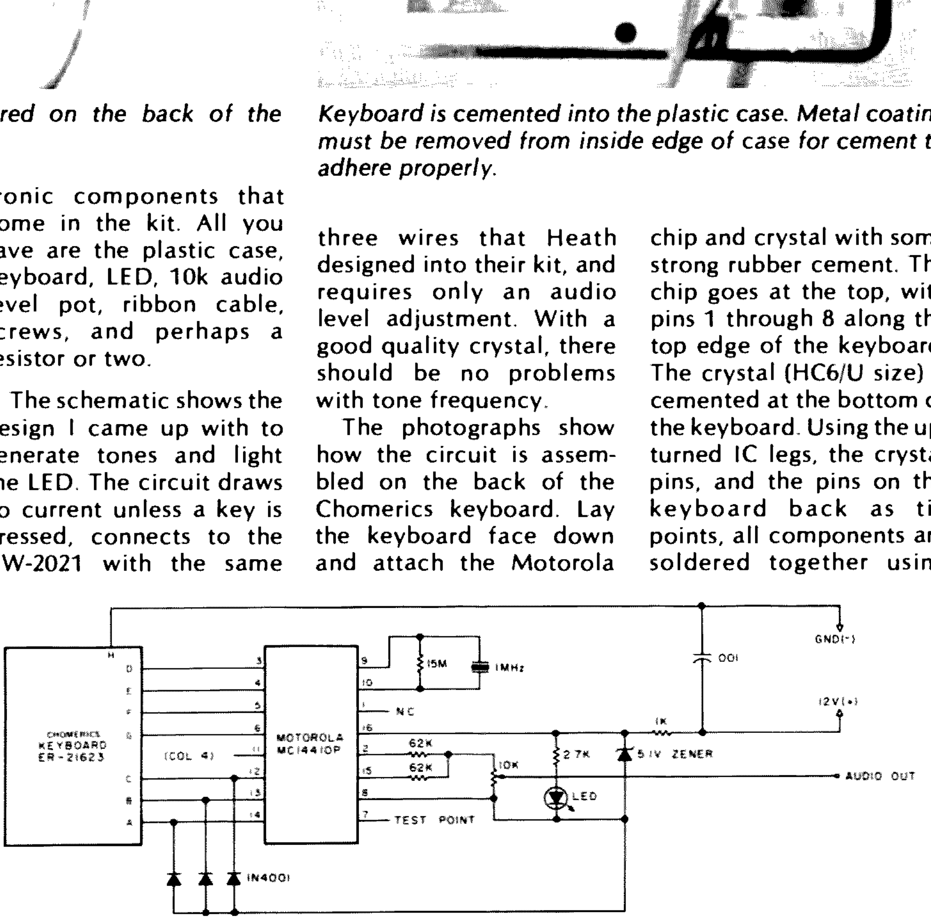

Fig. 1. Schematic and pinouts for modernizing the HWA-2021-3.

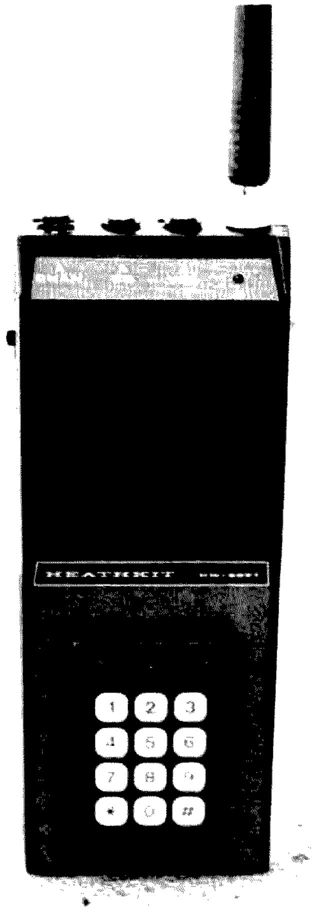

Completed HW-2021 with modified encoder pad. The internal improvements are not outwardly visible.

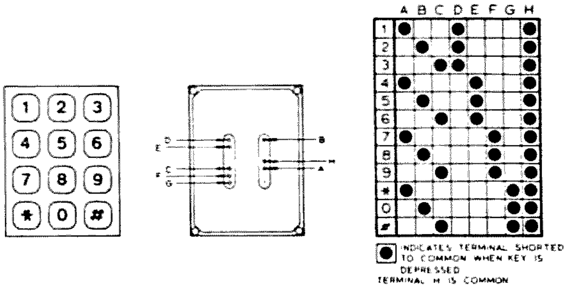

Fig. 2. Terminal connection diagram and code chart for Chomerics ER-21623 keyboard.

small solid wire. The LED sticks out on its leads and resistor in position for fitting into its hole when the keyboard is mounted in the plastic case. When soldering, be careful not to overheat the keyboard connections, as plastic parts can melt, ruining your keyboard. Solder quickly, using a low-wattage pencil with a clean tip. When the wiring is completed, attach the 3-wire ribbon and connectors supplied by Heath and connect it to your transceiver. Test the encoder on the air and have another station help you set the audio level to make sure everything is working. It will be easier to work on any problem now before the keyboard is cemented into the case.

If everything checks out, prepare the plastic case by scraping the metallic coating from the inside edge of the large square opening. The edge of a sharp knife or a fingernail file can be used, but take care not to remove any plastic and enlarge the hole. Also scrape some metal away from around the small hole for the LED. Locate the machine screws, nuts, and washers that would be used to hold the circuit board to the case in the original kit and mount them in the case. These screws now serve no function except to fill the holes for appearance's sake. Set the keyboard assembly into the case to make sure that everything fits properly, then remove it and coat the keyboard edge with a toluene-base plastic cement. Fit the keyboard into the case again, checking that the cement evenly fills the gap all around, and set the assembly face down on a nonadhering surface. Put a drop or two of the plastic cement behind the LED, and leave your encoder to dry overnight. Mount it on the handie-talkie as per Heathkit instructions, and you're in business.

It is also possible to find room for the electronic components inside the radio itself and mount the keyboard flat against the case front. You can use the larger size keyboards or a 16-button pad. The fourth column connection from a 16-key pad goes to pin 11 on the chip, and you will need to wire an additional 1N4001 diode to this pin as well. If you haven't purchased the HWA-2021-3 kit but are considering adding touchtone to your rig, I would recommend buying the keyboard and parts and rolling your own for a neat, slim appearance. ■

New Products

from page 35

unscrewing two machine screws on the bottom of the cabinet, the sensing element can be removed and installed behind the operating position or in another convenient spot so that bulky coax need not be brought up to the meter. Approximately four feet of small, flexible cable connects the sensing element to the meter, allowing a wide range of installation positions.

Using a variety of endfed wires and both monoband and multiband dipoles with coax and open wire feeders, all matched to the rig through a DenTron MT-2000A antenna tuner, I found the W-2 wattmeter an invaluable aid in ensuring that everything was properly matched and operating as it should have been.

I had previously used a combination swr/relative power meter that required constant switching back and forth between the forward, reflected, and power output positions during tune-up—a most annoying and distracting procedure. Now, with the W-2 in the line, I simply sit back and concentrate on getting the optimum match, not flipping a switch back and forth to see what is going on. The two large, easy-to-read meters give you a constant indication of the forward and reflected power, making the tune-up process quicker and safer.

The meters indicate forward and reflected power directly in Watts. To convert the reflected power reading into swr, you simply refer to the easy-to-use swr calculator in the operating manual or the graph on the handy card that can be posted on the wall or some other convenient spot close to the operating position. However, you'll quickly become familiar with the conversion factor and won't even need to check the manual or card to know what the swr is.

The W-2 sensor element has a slide switch to select the forward wattage (200 or 2000) to be measured. The reflected power stays at 200 Watts. The sensing element should be connected

Continued on page 69

George Young WB6JYK
Sierra High School
Tollhouse CA 93667

In the Eye of the Beholder

—ugly transformers make beautiful power supplies

Sixty to one hundred dollars or more for a heavy-current power supply tends to cool one's enthusiasm a bit. Winding your own transformer is one way to pare the cost a bit.

The tendency toward on-board regulation suggests that what is needed is a heavy-current unregulated supply with the unregulated input voltage around 7 to 10 V dc for a 5-volt bus. The 7-volt-minimum figure is necessary because the regulators must have a little more in than they put out. The 7-volt figure also is the loaded dc voltage, which means that the loaded dc will be higher.

Let's assume that you want 5 volts at 10 Amps and 12 volts at 1 Amp. (You may want different voltages or currents, but the process to follow will be the same.)

Power in Watts equals volts multiplied by Amperes. Watts = volts x Amps. I need (5 x 10) + (12 x 1), or 62 Watts, right? Wrong. I need more volts in both instances to allow room for the regulators to work. I use a design voltage of 8 V ac for a 5-volt regulated circuit and 15 V ac for a 12-volt circuit. I have seen articles about projects that used 6.3 V ac for the 5-volt circuit and 12.6 V ac for the 12-volt circuit. I have tried both these values and have not been satisfied with the results. I have used 7 V ac and 14 V ac successfully for 5- and 12-volt regulated circuits, respectively. The power that is not actually used gets turned into heat by the regulators, so some kind of trade-off is required.

If I use a design figure of 8 V ac and 15 V ac for the two supplies, I need (8 x 10) + (15 x 1), or 95 Watts. This must be translated into iron. At 60 cycles power line frequency, the amount of power a transformer will handle is directly related to how much iron it contains. So, how much iron do we need?

Over here in the corner of the shop is a vacuum-tube TV set. On the back of the set is a little placard that says: "120 volts alternating current, 60 cycles only; 175 Watts maximum."

Since the power into a transformer is essentially the same as the power out of the transformer, this transformer has iron in it worth 175 Watts. This transformer

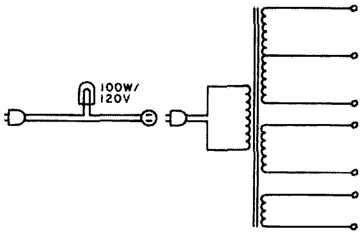

Fig. 1. Initial and final transformer test circuit.

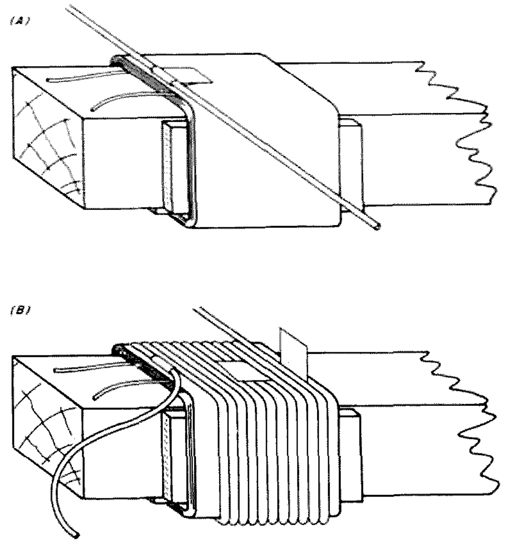

Fig. 2. Starting and finishing windings.

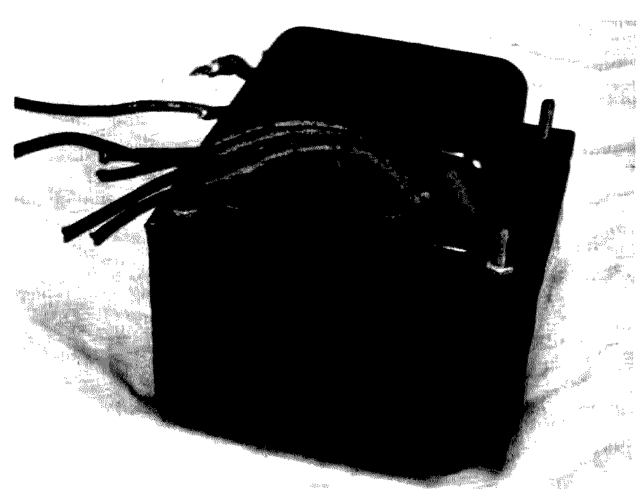

Photo A. The beast.

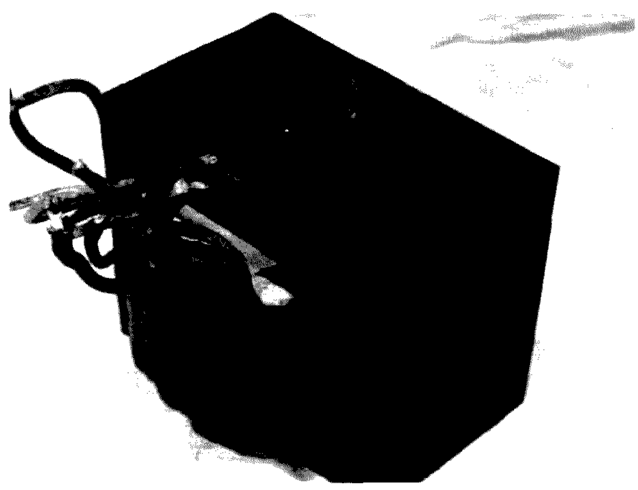

Photo B. Covers and static shield removed.

would do nicely for the 95-Watt supply I intend to build.

But, you say, the little placard is gone from the back of yours. Or the entire back is missing. Or the transformer has already been removed from the TV set, and there is now no way to determine its original power consumption. Well then, you'll have to do things a little differently.

Here is another transformer lying here on the workbench. It states on the side of it that the secondary is 36 V ac @ 3 Amperes. That multiplies out to 108 Watts. Let's measure the iron in it. To do this, measure the cross-sectional area. This is the iron that is inside the windings. The iron on the outside of the windings doesn't count in the power calculations. I measure 2.5 x 3.5 cm. Multiplying, that gives 8.75 square centimeters. If I divide 108 Watts by 8.75, I get a little over 12 Watts per square centimeter. This transformer would also be suitable for my supply.

And over here is the "beast." It's a TV transformer that has been separated from the TV chassis sometime earlier in its history. The cross-sectional area measures about 4 cm x 7 cm. That's 28 square centimeters. And 28 x 12 is about 336 Watts. Converting the measurements to square inches and using the table in Lew McCoy's article (*QST*, November, 1976), I get 350 Watts. That's close enough for me.

> Approximate power in Watts from a 60-cycle transformer equals cross-sectional area (in cm^2) multiplied by 12.

I am going to use this beast, and, as long as I am going to go to the trouble of rewinding it, I will put on two windings for the 12-volt supply and two windings for the 5-volt supply. In the winding area, called the window area, I will put on as many 8 V ac windings as I have room for. I have #18 wire and #14 wire on hand. This is one reason for the multiple windings. Each additional winding will add its current-carrying capacity to other windings with the same number of turns. You can put on one winding that will carry 30 Amperes using #10 (at least) wire, or you can put on 3 windings that will carry at least 10 Amps each. The end result will be the same — 30 Amps of capability. As long as the labor is going to go into rewinding, you might as well take advantage of all the power available in the iron you have selected.

Step One

Step one could have been the selection of the transformer to be rewound. However, most of you will not have multiple choices in this area. You will have one transformer available and, having determined its power capability, you need to decide which circuit to use. One point before I move on: You can't get 200 Watts from 150 Watts of iron. You can use 350 Watts of iron for 200 Watts output. 350 Watts of iron in a 200-Watt supply is fine business, as there will be lots of room for you to wind your wire in.

Only two choices of circuit are really available. The full-wave bridge circuit, shown in Fig. 3, and the full-wave center-tapped circuit, shown in Fig. 4. In the following short discussion, you will get an insight into why I decided to wind on multiple windings.

The full-wave bridge circuit requires the least number of turns in the rewinding process. If I give my high school students or my adult school students the options of full-wave bridge versus full-wave center-tapped circuits, they invariably opt for the fewer number of turns for the bridge circuit. You will have to evaluate the following trade-offs and make your own decisions.

In the full-wave bridge circuit of Fig. 3, a pair of diodes is switched across the 8-volt winding during each half of the ac cycle. This means that this pair is in series during this interval. All the current flows through the winding and through each diode in the pair. On the other half of the ac cycle, the remaining pair of diodes in the bridge gets switched in, and all the current then flows through this pair in turn. For a 10-Amp circuit, each diode in the bridge must carry 10 Amps, and the secondary winding must also carry 10 Amps. Since the pair of diodes conducting at this time is in series, each of the two diodes need withstand only half as much inverse voltage. Or each diode need have only half the peak inverse voltage (piv) of the full-wave center-tapped circuit.

In the full-wave center-tapped circuit, each of the diodes must withstand the full piv of the circuit. In either of the two circuit choices, this piv decision for the two circuits is not very important for the 8 V ac winding, because it is hard to find diodes with less than a 25 piv rating.

In the full-wave center-tapped circuit of Fig. 4, only one diode and one half of the secondary winding gets switched into the circuit on each half of the ac cycle. This means that each diode needs to carry only half of the total

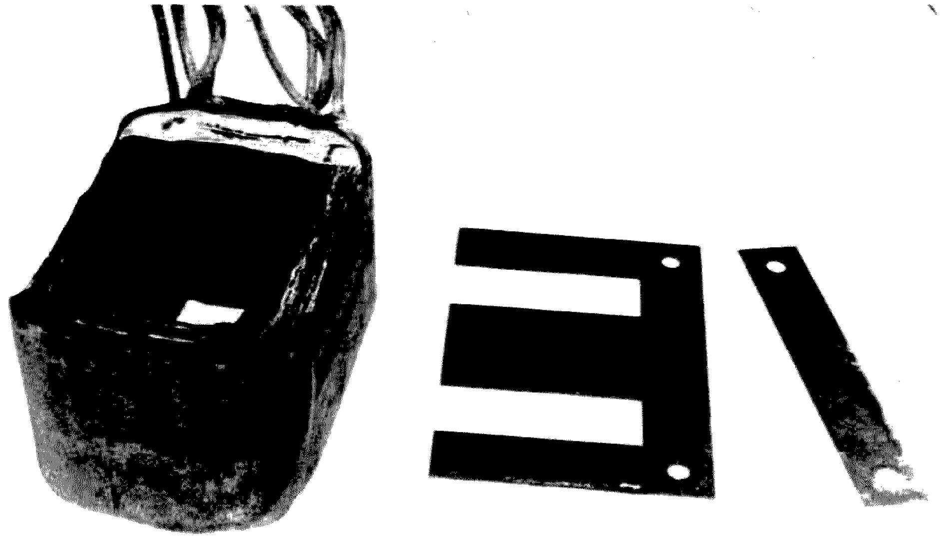

Photo C. Laminations removed.

current, and each half of the secondary winding carries only half of the total current.

What this means is that, for a given wire size and a given current rating of a diode, I can get twice the current from the full-wave center-tapped circuit that I can get from the full-wave bridge circuit. The trade-off is that I must wind on twice as many turns of wire for one circuit as compared with the other.

Now you can see the method in my madness in putting on as many windings as I have room for. I have the option of changing the circuit configuration and can use either circuit, depending on what I want to do with the rewound transformer.

Step Two

Is the transformer any good? I would like to know if the primary is burned out before I start the rewinding process. I am only going to rewind the secondary(s) and not the primary (I hope). I will whip out a little device that I call an anti-fuse-blower. It consists of a 100-Watt light bulb placed in series with the primary of the transformer. If the transformer is bad, the light bulb lights up. If the transformer is good, the light bulb either glows very dimly or doesn't light at all. I'll also use the same device later, after rewinding, to make sure that the rewound transformer is okay and doesn't have any surprises built into it. Connect up the transformer to be rewound as shown in Fig. 1, and let it cook for ten minutes or more. If the 100-Watt light bulb lights up to full brilliance, start looking for another transformer.

Step Three

Identify the windings. If the transformer has standard color-code windings, they will be: primary – black wires; high-voltage secondary – red wires; high-voltage winding center tap – red/yellow; 6.3 V ac heater – green; and 5.0 volt heater – yellow. There may be an extra 6.3 V ac winding (for the picture-tube heater), and there might be an extra 5.0-volt winding. If the color code is something other than standard, or the wire colors have badly faded, then your task is a bit more difficult. (And the anti-fuse-blowing light-bulb circuit will be even more advantageous.)

Since you don't know what the primary is, you haven't got it connected up yet. So ring out the wires. The Squawker, presented in the "Kilobaud Klassroom" series of articles (*Kilobaud* #10, October, 1977), is very handy for this purpose. Use it, an ohmmeter, or a continuity tester, and find out which wires show continuity. The resistance of the high-voltage winding will be enough to change the pitch of the Squawker. Pair up the wires and tag them. (I usually take a short length of scrap hookup wire of the appropriate color and wrap this in a coil around the wire. Two black coils around two wires would identify the wires that I thought were the primary wires, for example.) Next connect the two wires that you think are the primary of the transformer, and see if the light bulb glows dimly. If it glows brightly, then this pair is not the primary. Try another pair. If the light bulb glows dimly, or not at all, then, using a little caution because 300 to 400 volts bites like crazy, short a pair of wires together. This will turn on the lamp to full

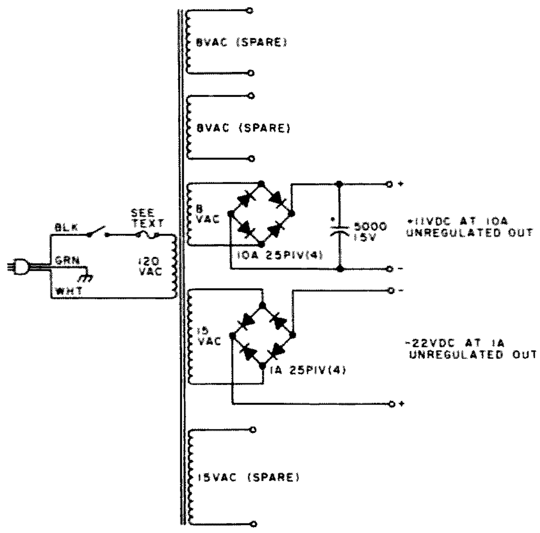

Fig. 3. Full-wave bridge circuit.

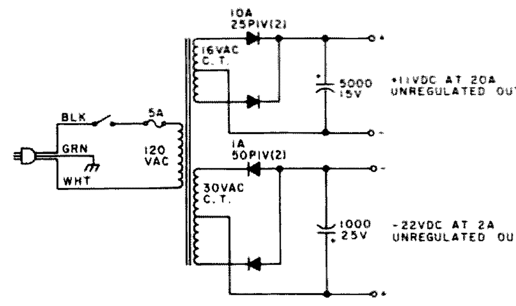

Fig. 4. Full-wave center-tapped circuit.

brilliance. If it doesn't, then you'd better do some checking on your circuit, since you don't have a circuit.

When you think that you have the primary connected to the light bulb and 120 V ac, use a voltmeter to measure the voltages on each identified pair of wires. They may be slightly lower than 5.0 or 6.3 volts because of the lamp in the line, but they'll be close. Watch that high-voltage winding; it's lethal, and we don't want a funeral. The 120 V ac is lethal as well, so use caution. If you don't have a voltmeter, you'll have to find a ham who does, or you'll have to get yourself over to the local high school and use theirs.

Step Four

Disassemble the transformer. Remove any bolts holding the thing together. Store the bolts to put the transformer back together when finished. The iron is glued together with varnish, so, even after the bolts are removed, the transformer will not fall apart. Remove the covers, if any, and store them. Have a small cardboard box handy to put all the pieces in. Use a thin-bladed knife, such as your spouse's paring knife from the kitchen, and force it in between the outermost lamination. Do each side outside the winding first. Then force it down inside the winding. You are trying to break loose the lamination on the outside that is glued to the rest of the laminations with varnish. Run the knife blade all around until you break this outside lamination loose. Now the lamination must be pulled out. Tapping on it with a small hammer and a thin block of wood sometimes works. Perseverance will eventually pay off. Get it out, and try not to butcher it up any more than you have to. After that first lamination is out, you'll have to look carefully at the remaining laminations.

The main laminations are made from E and I sections (see Photo C). Sometimes they are singly stacked, sometimes in groups of twos, sometimes in groups of threes. I even pulled a transformer apart once that had all the E laminations in one direction, and all the I's in the other direction. You want to separate each group of E's and I's, and remove them from the stack with the varnish gluing them together. They will be reassembled in the same fashion, so study the transformer to see how it was originally made. After the first several groups of laminations are removed, the remainder tend to come out more easily. Place the laminations in the cardboard box. Some transformers have a copper band that encircles the entire winding and laminations. If you have one, remove it. It usually can be slipped off, but hacksaw it off if necessary.

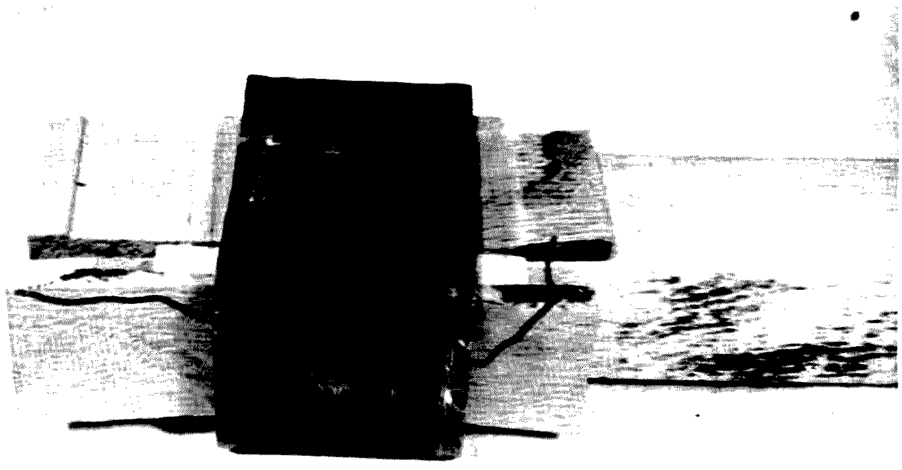

Photo D. Ready for rewinding.

Step Five

With the iron removed, you are ready for a little surgery. Slit the paper in the area of the windings where the wire exits. Peel off the paper and discard it. Work your way inward until you find the crimps that hold the wires to a fairly thick piece of cardboard. At this point, you might be able to identify wire insulation colors where you could not tell the color before, especially if the problem was one of fading. If you are lucky, the winding will be in the following order, starting from the innermost and working outward: primary, high-voltage secondary, 6.3-volt winding, and 5.0-volt winding. There are some very practical reasons for this sequence, so it will be by far the most common sequence encountered. Remove the wires from the crimps, and bend them over to one side out of the way. Remove the 5-volt winding, and count the turns. Write the number of turns for the five-volt winding on the side of the box that holds the laminations. Do not trust your memory. Write this number down. I count ten turns on my transformer.

If ten turns produces 5 volts, I now know that the transformer was wound with 2 turns per volt. Since I want 8 V ac for my 5-volt power supply, I will need 16 turns of wire for 8 V ac and 30 turns for the 15 V ac winding. That's why you count the turns for the 5-volt winding. Next remove the 6.3-volt winding. There should be 6 x 2, or 12-13 turns for this winding.

Now cut the wire leadouts (called flyleads) for the high-voltage winding, but *unsolder* the primary wire flyleads. With your knife, cut the wires for the high-voltage secondary, and remove the windings in layers. Work carefully as you approach the primary winding, as you will want to use this winding intact and undamaged. If you should be so unlucky as to have the primary anywhere else but next to the iron core, then the primary will also have to be rewound. 120 volts at 2 turns per volt means 240 turns will have to be wound back on for the primary of the transformer. You may want to disassemble another transformer rather than rewind the primary.

Step Six

Make a handle for the winding process. Take a rectangular piece of wood slightly smaller than the opening in the core and about 8-10 inches long. Use wooden shims to anchor the handle inside the core firmly. The reason for this is to prevent any distortion of the core during the winding process.

Wrap a piece of scrap wire around the core. Remove it. Measure its length. Multiply this by the number of turns that are to be put on the winding. This gives you the length of wire that you will need for this winding. Since this length will increase for each additional winding added, this step must be repeated after each winding is added. What size wire to use?

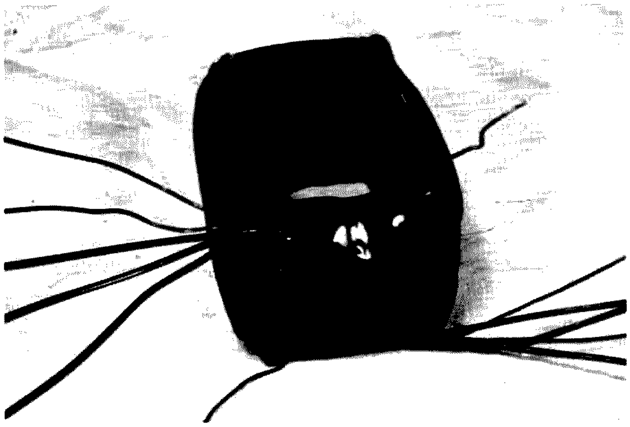

Photo E. Rewound.

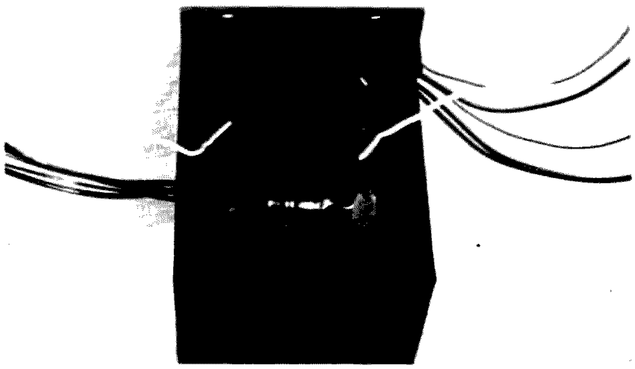

Photo F. Reassembled, with mounting brackets installed, and painted.

The *Radio Amateur's Handbook* has a copper-wire table in the back part of the book. However, no. 12 wire is rated at 20 Amperes, and no. 14 wire is rated at 15 Amperes service for commercial house wiring. Although this is not quite the same as using the wire inside a transformer, it is reasonably close. It can be used as a guide, if you do not have access to a copper-wire table. The wire table suggests #18 wire for 10 Amps and #24 for 1 Amp. If you go 2 wire sizes lower, you will have plenty of safety margin. Use #16 for the 10-Amp winding and #22 for the 1-Amp winding. But I don't have any #16 or any #22. I do have #14 and #18 wire. So I will have about a 200% safety margin.

Since my wire is on a spool, I don't even have to measure it out first. I simply clamp one end of the spool in the vise, after reeling off about 20 feet, and start winding. If I run short, I just unwind a little more to finish up the winding. If you have to go out and buy enough wire, go through the measurement process described earlier, and add a couple feet for safety and flyleads. If you have to buy a 100-foot spool of wire, then don't cut it off first. Just reel off about 20 feet, clamp the other end in a vise, and start winding.

The smaller wire will produce a smoother layer, so it goes on first. The starting of a winding is shown in Fig. 2(a). The finish of a winding is shown in Fig. 2(b). The start and the finish must be on the same side of the winding, as were the original starts and finishes of the windings that were removed. If this step is not followed, you will never get this brute back together when you're done.

I use 2-inch-wide tape, such as masking tape or "sticky green" tape, between each winding. You can use narrower tape, but it will not produce quite as smooth a layer upon which to wind the next winding. Three-quarter-inch plastic electrical tape can be used by slightly overlapping as you wrap. You should use modern enameled wire, such as Formvar™ or Nyclad™. This stuff has really tough insulation. I simply leave the flyleads long enough to use and solder new flyleads to the primary transformer leads.

Step Seven

Reassemble the laminations. You may find that all the original laminations will not go back in. Put in as many as you can without damaging the rewound core, and let it go at that. There should be only one or two groups of laminations that you can't get back in. I never put back the covers. These are for looks and for protection of the windings. They trap heat inside the transformer. Leaving them off makes for a cooler running transformer, especially if you don't get back in all the laminations that came out.

Step Eight

Connect the lamp again in series with the primary of the rewound transformer. It should not light to full brilliance when the primary and lamp circuit are connected to 120 V ac. It should light to full brilliance when any of the secondary windings is shorted. Measure the voltages for the rewound transformer. They should be very close to the calculated values unless somebody miscounted turns when he was rewinding. They may be slightly low, because the lamp is in series with the primary. If all is well, remove the lamp from the primary circuit and connect directly to 120 V ac. I always fuse the primary for this step, because I then go off and leave the thing plugged in for a couple of hours. The transformer laminations after this time should be warm, but not hot enough to be uncomfortable to the hand.

Step Nine

The rewound power transformer must be mounted in some fashion. The simplest way that I know to do this is to use angle brackets. Two pieces of extruded right-angle aluminum are cut to the length of one of the dimensions of the iron. Two holes are bored that will align with the transformer bolts. The transformer is placed on a wooden surface, and a block of wood is used to tap on and realign the iron laminations. Alternate sides are tapped until all surfaces are satisfactorily plane. The bolts are then inserted, passing through the aluminum brackets, and cinched down. The windings are then masked off, and the laminations and the brackets are given a coat of flat-black spray paint. This completes the transformer.

Step Ten

The current drawn by the primary will be 95 Watts divided by 120 volts, or a little less than 1 Ampere. A 2-Ampere fuse will provide a 100% overload condition before blowing. This is the starting point for the fusing. A filter capacitor appears as a dead short to the diodes in the power supply upon start-up, so the chances of the 2-Amp fuse blowing are pretty good. This fuse will later be increased to as much as 5 Amperes in the finished circuit. If this blows, you can be reasonably certain that there is something else wrong.

The diodes selected for the bridge power supply configuration must each carry the full rated load of 10 Amperes. I plan to use 10-Ampere diodes for this supply, but 25-Ampere diodes would be a better choice, as

they would have a far greater safety margin. I will use the largest filter capacitor for the 5-volt supply that I can find – 100,000 uF, if I can find one I suggest at least 5000 uF for the 5-volt supply and at least 1000 uF for the 12-volt supply.

I expect 8 x 1.41 volts from the 8-volt winding, or approximately 12 V dc. Therefore, the working voltage of this filter capacitor will have to be at least 12 volts, preferably 15 V dc. I expect about 1.5 times 15 volts for the 15-volt winding, so this filter capacitor will need at least a 25 V dc rating.

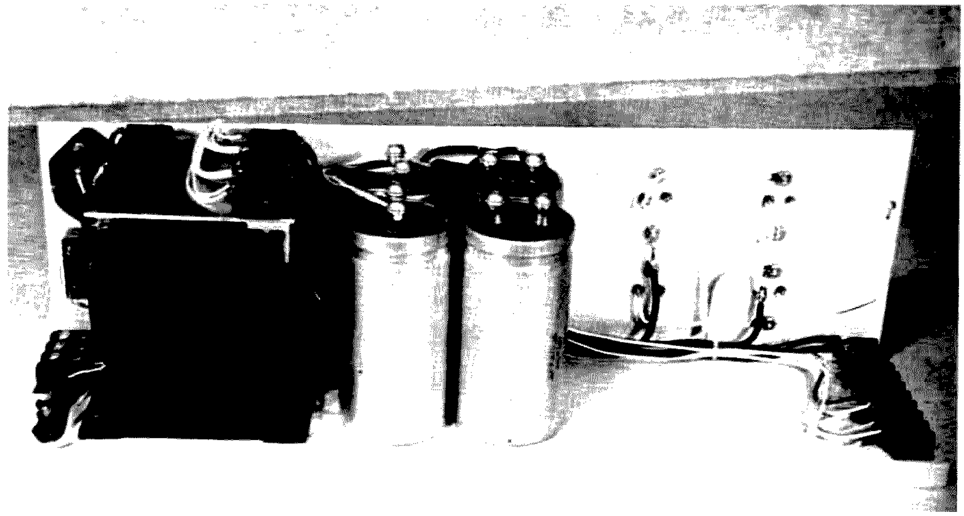

Photo G. The beauty. Possible output from regulators: 45 Amps @ 5 V; 10 Amps @ 12 V. Weight – 21 pounds!

Figs. 3 and 4 give the unregulated power supply circuits. You may have wire or components on hand which will dictate which of the circuits you will use. Fig. 3 shows the windings that I had room for in the beast that I rewound. The major portion of the labor involved is in taking apart the laminations and in putting them back in. Putting on the windings themselves is actually a small part of the labor.

The piv (also peak reverse voltage or prv) ratings of the diodes should be 25 piv. As mentioned earlier, it is difficult to find diodes with a lesser piv. This piv rating will be satisfactory for both the 8-volt and the 15-volt windings of Fig. 3. Twenty-five piv diodes will be satisfactory for the 16-volt center-tapped windings of Fig. 4, but 50 piv diodes will be required for the 30-volt center-tapped winding of Fig. 4.

The diodes should be mounted on a heat sink. This is especially true if the diodes are to be operated at anywhere near their rated current capacity. The diodes must be insulated from the heat sink, but they must have thermal conductivity to the heat sink.

Conclusion

The photographs show the stages of beast to beauty. The finished unregulated supply is just under 17 inches long and only as wide as necessary to hold all the components. It was designed to fit into the rear of a cabinet that will take 19-inch panel racks.

The unused space at the right of Photo G, showing the finished supply, can be used for additional filter capacitors, or it can be used to mount the regulator circuits. I haven't decided yet which to do with it.

The aluminum rear apron is a 5¼-inch rack that was cut off to 16-3/4 inches. I used two 4000 uF capacitors in parallel for 8000 uF for the 5-volt unregulated supply. These are paralleled with two strips of scrap double-sided printed circuit board, which makes a handy solderable bus material. Two more 4000 uF capacitors were used for the 12-volt filters.

I found two 6-Ampere bridge rectifier circuits for the 15-volt windings and used them. They can be seen mounted on the panel at the left of the transformer.

I could not find four 10-Ampere diodes or any other heavy-current diodes that were suitable. I used 4 power transistors. I have been teaching in Kilobaud Klassroom that transistors are two diodes mounted back to back, so I decided to see just how four 15-Ampere collector-base junctions would fare used as power diodes. They work fine. The only problem was that the ones I had available were salvaged off printed circuit boards and had very short leads. This presented some difficulties in getting heavy wire connected to the cut-off base leads, but perseverance finally paid off. The transistors were insulated from the heat sink with transistor-mounting kits, and liberal amounts of silicone grease were smeared between panel and transistor case. The entire rear apron is a heat sink. ■

New Products

from page 62

between the output of the transmitter (or amplifier) and the antenna or tuner. Ordinary PL-259 coax connectors will couple correctly with the SO-239 receptacles on the sensing unit.

In addition to selectable 200-/2000-Watt forward power scales, the DenTron W-2 features an operating frequency range of 1.8-30 MHz and meter accuracy of ±5%. The unit measures 7 x 3½ x 6 inches (the removable sensor box is 4 x 2½ x 2½ inches) and weighs 5 lbs. Attractively packaged in a cabinet with black finish that matches the rest of the DenTron product line, the W-2 makes a most practical addition to the shack.

The DenTron W-2 wattmeter is priced at $99.50. *DenTron Radio Co., Inc., 2100 Enterprise Parkway, Twinsburg OH 44087.*

Morgan W. Godwin W4WFL
West Peterborough NH

CSC INTRODUCES NEW $89.95 CALCULATOR-SIZE 50 MHz COUNTER

CSC has introduced their new Mini-Max counter, a surprisingly small, surprisingly inexpensive counter with 50 MHz guaranteed performance.

The Mini-Max counter is in a small (3" x 6" x 1½") calculator-style case. It features a six-digit magnified LED display with 100 Hz resolution. Decimal points after the second and fifth digits act as pilot lights and indicate MHz and kHz points on the display.

The counter display updates ten times per second, permitting easy "speed-read" mode frequency tuning without the usual one second delay between counter readings.

A UHF FET preamplifier provides very capable weak-signal performance, permitting the Mini-Max to be driven directly from an optional accessory whip antenna. In addition to high sensitivity, this FET front end means a high input impedance (greater than 1 megohm) for minimal loading and a highly linear input.

Using a standard TV color burst crystal for its timebase, the Mini-Max achieves ±3 ppm timebase accuracy, user-

Continued on page 73

Dave Ingram K4TWJ
Eastwood Village No. 1201 S.
Rt. 11 Box 499
Birmingham AL 35210

The End of Rf Feedback

—here's how the pros do it

If you've ever had your lip bitten by a "hot" mike or had your finger burned on a metal transmitter cabinet, you know how aggravating rf feedback can be to the amateur setup.

Not all forms of rf feedback, however, are as physically apparent as the previously mentioned situations. The addition of an external speech compressor, a new mike with its coiled cord, or a new high-power linear amplifier, for example, can often cause undesired oscillations and abnormal meter readings in the station transmitter. Two meter rigs and plastic-cased HTs are also quite prone to rf feedback, the latter often being characterized by a low-frequency hum or "motor-boating" effect on the transmitted signal. Rf feedback is particularly annoying, also, to SSTV and RTTY operations, as it tends to disrupt the transmitted information as well as obliterate in-station monitoring during actual transmissions.

Very little has been written about in-station rf problems; thus, most amateurs usually rely on local advice for suggested cures. Unfortunately, this method has one serious drawback: The variety of opinions acquired usually leaves the troubled amateur totally confused. Suppose, however, that rf feedback problems developed in a 50 kW broadcast station. Such conditions could not be allowed to exist. An immediate solution would be sought! Applying this same reasoning to amateur setups, we see that rf feedback is a dilemma which can be cured.

The following techniques reflect ideas acquired through commercial broadcast experience and knowledge gained from consulting engineers. Their measure of success in eliminating unwanted rf lies between 95 and 99 percent. Amateurs, naturally, can't afford to invest hundreds of dollars in exotic cures, so these techniques have been slightly "streamlined."

As a preliminary consideration, I will assume your antenna is a coax-fed type (beam, dipole, vertical, etc.) which does not radiate from its feedline. Longwires and windoms, for example, do radiate from their feedlines and are notorious feedback generators. I will also assume your antenna's swr is below 2:1 (a high swr reflects rf energy back into the station equipment), and that the antenna isn't in close proximity and parallel to outdoor power lines (which is also a safety hazard).

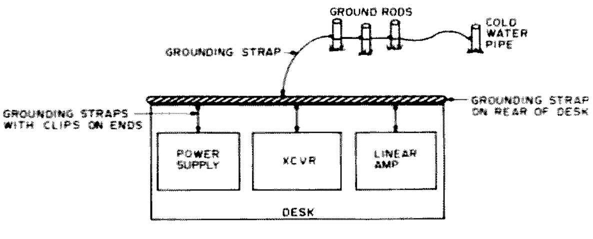

Fig. 1. Layout of grounding strap system.

HF Station Problems

Most rf feedback problems can usually be linked to insufficient grounding techniques. "Floating grounds" can act as miniature antennas, picking up a small amount of the powerful transmitted signal and returning it to equipment and/or wiring in the shack. Naturally, the returned rf plays havoc with sensitive low signal level stages which amplify the feedback and produce oscillations.

The prime consideration in eliminating rf feedback involves getting all available energy to the antenna and properly grounding all equipment in the station. Relying on interconnecting cable ground shields and what are assumed to be good grounds invites problems and ground loops. A known, solid ground is the first corrective step.

Begin your ground system (Fig. 1) with two or three long rods spaced approximately one foot apart and driven into the earth near your shack. Connect a heavy wire (No. 6 or 8) or copper strap from the rods to the closest cold water pipe *at* ground level, and bury this interconnecting wire. Various sizes of grounding strap are available from local electronic supply outlets, or you can remove and use the braid from a length of RG-8/U cable. The cold water pipe should be sandpapered to a shiny finish before the grounding clamp is installed and the completed connection should have a resistance of less than one Ohm.

Next, mount a heavy piece of grounding strap along the back edge of your operating desk and connect it to the outside ground system with heavy wire or cable. Each piece of station equipment should then be connected to the desk's ground bus using the shortest possible length of strap with alligator clips on its ends. Equipment located remote to the operating desk should also be connected to this ground bus via a similarly prepared cable. The previous steps will accomplish two basic purposes: They will eliminate any rf ground loops and provide a very effective ground which should improve your radiated signal. If an rf feedback condition still exists, proceed to the following simple, but effective, steps.

Rf energy often re-enters the station equipment via improperly grounded ac lines or resonant cable lengths. Bypass the ac power cable on each piece of equipment with .01 uF capacitors as shown in Fig. 2. Next, shorten the station's microphone cable to its minimum usable length and double check solder joints in the mike plug(s) for good connections. If you're experiencing feedback in the mike circuit (identified by transmitted squeals and unstable plate meter readings), the rf filter shown in Fig. 3 can also be installed inside your transmitter at the mike jack. If you use a linear amplifier, shorten the rf cable between your exciter and amplifier to its minimum acceptable length also.

Rf feedback problems which survive the previously described cures will require special detection and correction techniques. Items like an rf "Snif-it" and sensitive neon lamps may be helpful in locating their source(s). Once these sources are semi-localized, you might check with local radio and TV broadcast engineers or consulting engineers for specific elimination techniques. Practically every broadcast station knows a consulting engineer and often these engineers are also hams.

VHF Problems

Although rf feedback isn't a commonly experienced problem in FM gear, it can happen when proper bypassing techniques are not employed. That's why you often find two or three bypass capacitors paralleling power leads and emitter resistors in FM transmitter circuits. Typical values for these capacitors are .01 uF, .001 uF, and 470 pF. Rigs that skimp on these capacitors often experience intermittent feedback problems. These problems

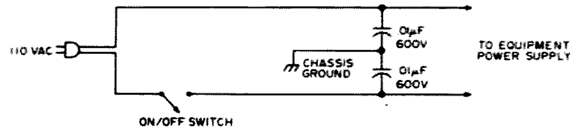

Fig. 2. Ac bypass system for elimination of rf feedback in power lines.

are usually characterized by low-frequency hum and distortion on some, but not all, frequencies. The problems are usually more noticeable at high power levels, also. Plastic-cased HTs are especially prone to rf feedback because the antenna is located near the semi-shielded transmitter, and because lack of space often prohibits effective bypassing techniques. This feedback usually occurs in highly sensitive audio modulation stages. Corrective measures involve adding bypass capacitors to each stage (additional emitter bypass capacitors usually do the trick) and reducing the antenna swr. Power and audio leads which are not bypassed and that run near the HT's top are also rf feedback suspects. Since low-frequency motorboating may also be produced by bad batteries (high internal resistance), this possibility should be checked before tearing into an HT. Use batteries rather than an ac power supply for this test because the supply's output filter capacitor can decouple stray rf signals. Another effective means of localizing rf feedback with HTs involves switching between an internal and outdoor antenna while noticing its effect on the transmitted signal.

Summary

Each case of rf feedback has its own unique set of circumstances and corrections. Fortunately, many of these cases are easily rectified using straightforward techniques. Difficult feedback cases may require several days of "tinkering" to correct. However, if one diligently and persistently follows a logical process of elimination (of potential rf paths), an acceptable solution can usually be secured in minimum time. Remember, rf feedback can be annihilated! ■

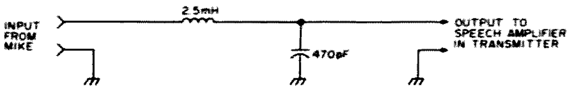

Fig. 3. Rf feedback filter for mike input circuit in transmitter.

New Products

from page 69

trimmable. The digital logic of the Mini-Max is all LS (low power Schottky) series TTL, leading to a low overall current consumption of less than 70 mA.

The suggested resale price for CSC's Mini-Max is $89.95. A number of optional accessories are also being made available, including an antenna, input cables, a carrying case, ac, and automotive battery eliminators.

For additional information, contact *Continental Specialties Corporation, 70 Fulton Terrace, New Haven CT 06509; (203)-624-3103.*

TELEX EARPHONES

During my years as an amateur and SWL, I have used many different earphones, new and used, commercial and military surplus, ranging in cost from a couple of dollars to several in the forty to fifty dollar class. Regardless of origin or value they have—almost without exception—shared a couple of common qualities: the ability to make my ears feel as if someone had injected them with novocaine and that they were about to drop off, and a subsequent roaring headache.

Now, thanks to the folks at Telex, I am wearing phones and actually enjoying the experience. It has been very interesting to be able to switch back and forth between three different Telex models representative of the basic types in their product line and compare them for performance and comfort.

Of the three types, the model HFC-91 is the smallest and lightest, weighing only 1.5 oz. Worn under the chin, the phones fit comfortably in the ears, cushioned by soft foam. A magnetic element feeds the sound through the acoustic tube, introducing a one millisecond delay that enhances intelligibility. The HFC-91s are low impedance (8-20 Ohms) and have a frequency response of 100-3,000 Hz.

If you wish, the driver unit may be detached and snapped onto a nylon earloop for single ear use. During the past few

Continued on page 75

David G. Boyd K9MX
Rt. 2, Box 960
Collinsville IL 62234

The Heavyweight

—a keyer base that stays put

Like most hams, I use an electronic keyer for my CW work. It happens to be a Heathkit® HD-10 set up for the high range, so it is pretty awkward to operate at slow speeds. Since I am an active Official Observer, I often have occasion to work newly licensed Novices at speeds well below the 15 wpm minimum my keyer will allow. Since I am also basically uncoordinated below 20 wpm (at least with a keyer), I like to have a straight key handy for working Novices, but I dislike the clutter produced by having two keys on the table at the same time. The solution, obviously, was to go to a dual paddle/straight key arrangement, where both keys are on one base. But those sexy little units are *expensive*, the cheapest going for about $45.00. Not having a handy $45.00, home brew was clearly my only choice, and my wife made that very clear.

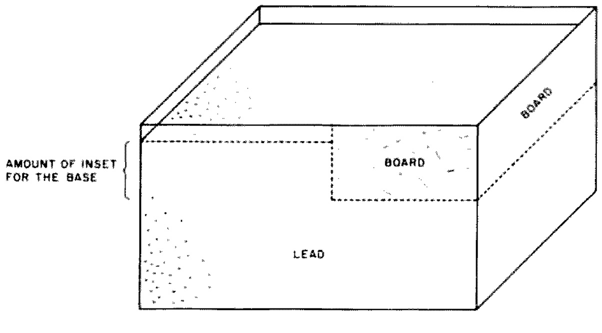

Fig. 1. Using a board to provide the needed base thickness.

Since I already had the keyer paddles and a J-38-style straight key, I designed my base around them. If you happen not to have a set of paddles, a good set—without a base—is available from the Ham Radio Center in St. Louis (check *73 Magazine* ads). Called the Model HK-2, they are good copies of the famous Brown Brothers' paddles, and they sell for only $19.95. If you happen to be really concerned about style, you can do as I did and paint your straight key to match the paddles.

I suggest you use lead for the base because it is relatively cheap, easy to melt, and nice and heavy. You can buy the lead from most hardware or sporting goods stores if you like, or you can take the cheap way and finagle a pile of discarded wheel-balancing weights from your local garage. Fishing weights also work, but they are costly. The wheel weights may be a mite dirty, but melting them down will take care of that. You will need about five or six pounds of lead to make the base, and you can melt it down on your kitchen stove. While a lead-pot is nice to use, any old pan will do. BUT DO NOT PLAN TO USE IT AGAIN TO COOK FOOD. If you use wheel weights, you will have the steel or tin pieces used to attach the weight to the wheel to fish out of the molten brew, or you can use a heavy screening material of some sort to allow only the molten lead to pour through.

The ideal mold, of course, is a metal tray exactly the size you need, but you probably will not have one handy. You can make a

good mold, though, by packing mud into a pie or cake pan and shaping it to the proper dimensions. Pour the lead into the mold while the mud is still wet, and it will make it a little easier to clean the dirt off the finished product. I suggest, if you use a standard J-38-style key, that you make one side of the base thinner than the other. The J-38 was designed to be used on a board where the key sits flat on the same level as the telegrapher's forearm, so if you put it on a lead base thick enough to elevate the paddles to the proper level, the straight key will be uncomfortable to use. For that reason, you will need to make part of the base a bit thinner. You can do that in any one of three ways. The first is to beat down one side with a hammer, but since lead is a lot harder than you might imagine, I do not recommend that solution. The second is to build a small mud floor under half of your mold. If you do that, you will have to pour the lead into the deep side and let it flow onto the mud platform. The lead is very heavy, and you will drill a hole in the mud if you pour the lead directly onto it. The third approach is to place a board over half of the mold as shown in Fig. 1. The lead will flow under the board. It will scorch the board, but it will not ignite it.

You should wind up with a base that weighs about six pounds and that will not—I guarantee—walk around your desk. The dimensions shown in Fig. 2 will accommodate a standard J-38 key (removed from its phenolic base), and a Ham Radio Center set of paddles. A coat of wrinkle-finish black paint and weather stripping for feet makes it an attractive addition to your station. I

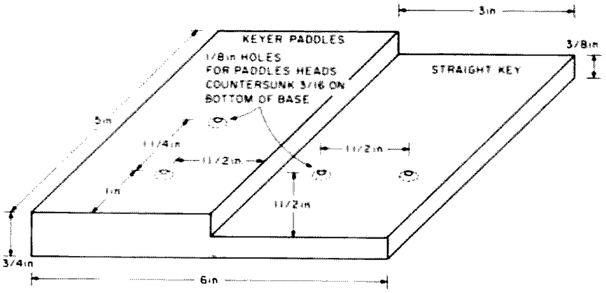

Fig. 2. Lead base dimensions.

glued a terminal strip to the lead using Super Glue, but it would be easy to pour the base with an inset to accommodate a plug of a different sort.

I expected the lead to be a good insulator, but I quickly discovered that it holds true only with very high-grade (read expensive) lead. The common for my paddle is through the lead to the common on the straight key. No wire is needed. Note also that the 1/8-inch bolts used to secure the paddles and key to the base are countersunk into the bottom of the lead base. If you are left-handed, you may want to reverse the high and low sides to put the paddles in a more comfortable position.

Even if you have to buy every component new, you can have a custom equivalent of the $45.00 set for less than $25.00. And if you already have a paddle and straight key, you can add a bit of luxury to your shack for just a few minutes of work. ■

New Products

from page 73

weeks, I have worn the HFC-91s regularly for periods of up to three or four hours at a time without any noticeable discomfort or fatigue and, in fact, I found that I often forgot I had them on.

Weighing only 1.6 oz., Telex's model HTC-2 is similar in appearance to the under-the-chin style phones, but has twin magnetic receivers which are worn over the head. The dual receivers rest on the temples, and the sound is fed into the ears through adjustable tubular sound arms mounted on ball-and-socket joints. This permits the wearer to turn one or both of the sound arms away from the ear, enabling him to converse without removing the phones. Eyeglass wearers who prefer over-the-head phones will find the HTC-2 particularly comfortable, as they apply no pressure to the glass frames. Frequency response is 100-3,000 Hz and impedance is 8-20 Ohms.

Traditionalists will especially like the model C-1320 phones. Full-sized and with large, comfortable, foam-filled vinyl cushions that reduce external sounds and concentrate the signal at your ear, they can be worn for considerable periods without discomfort or fatigue. In choosing a pair of phones, it's the ears that count. And my ears tell me that they like what they hear and feel when I am using the C-1320s. The phones have a frequency response of 20-20,000 Hz and are low impedance (8-20 Ohms).

Frankly, using the Telex phones has spoiled me, and I've enjoyed every moment of it. Both the HFC-91 and HTC-2 are, in my opinion, just the ticket for the amateur or SWL who demands phones that are very light and comfortable and which can be worn for lengthy periods without becoming bothersome. They are particularly attractive if you carry a rig when you travel, since, with their small size and extremely light weight, you can slip them into a corner of your suitcase or a coat pocket without noticeably adding to your burden. I certainly intend to carry one or both of them with me the next time I head for Europe.

For those willing to give up a few ounces in weight and who like the feel of a more conventional pair of phones, Telex's C-1320s are great. They do a fine job on phone and CW, and knock out a lot of background sounds that are often distracting, particularly when you're trying to pull a really weak signal out of the noise.

All three models have five-foot cords terminated in standard .250-inch diameter phone plugs. List prices are $8.95 for the HFC-91, $22.00 for the HTC-2, and $39.80 for the C-1320. *Telex Communications, Inc., 9600 Aldrich Avenue South, Minneapolis MN 55420.*

Morgan W. Godwin W4WFL
West Peterborough NH

PAINLESS PC FILM PROCESS

If you're like me, many interesting and useful construction projects for the shack never get done simply because of the feeling that it's too much of a bother to prepare the needed printed circuit boards, customized front panels, component placement decals, specialized meter faces, and similar items.

Well, that's no longer a legitimate excuse. Printed Circuit Products Co. has developed a new process for making all of the above mentioned items and more directly from a magazine page. Called PCP Type-A, it is a "no camera/no chemical" film product that enables the user to produce artwork with the good optical quality and high resolution required to obtain high quality results.

The simple six-step process takes about 15 minutes to complete and, judging by the results of our testing here at *73*, you do indeed get high quality work for a minimum of effort—without needing any special tools or developing fixtures. All that is required is for the user to cut the film to the rough size, peel the paper backing from the film, stick the adhesive side of the film to the printed page that you wish to copy, smooth out the air bubbles, and soak the film in water so that you can remove the paper. The film is ready for use when it is dry. Now, using a photoetching process, you can go ahead and produce your PC boards or other items (such as a special meter face or front panel) to give your home brew projects that professional touch.

Current pricing for PCP Type-A is as follows: small pkg. (6 pieces—4" x 6")—$5.49; medium pkg. (4 pieces—6" x 9")—

Continued on page 77

Robert M. May II K4SE
PO Box 30
Jonesboro TN 37659

Sleight of Hand

—getting 12 V from 24-V transformers

Did you ever wonder why your favorite electronic parts catalog often lists 120/24-volt transformers at prices cheaper than 120/12-volt transformers with the same, or lower, amperage ratings? Simple! It all goes back to your high-school economics law of supply and demand. As you are probably aware, most amateur, stereo, and CB equipment intended for mobile use requires 12-14 volts dc. Supply voltages of 24-28 volts dc are usually used for military electronic equipment. Why? Because all recent civilian vehicles have 12-volt dc systems. Most military vehicles use 24-volt dc systems. It follows that in order to use your 12-volt dc amateur, stereo, or CB unit in your house, you need to provide a 12- to 14-volt power supply. Electronic parts suppliers, realizing that this fact provides a better market for 120/12-14-volt ac transformers, naturally try to get the price for 12-volt transformers as high as the market allows. Wouldn't you do the same if you ran a supply house? Their 120/24-volt ac transformers usually do not move very fast except to someone with surplus military gear or someone building a regulated power supply where higher voltages can be lowered by regulation circuits. However, here we will be talking about providing 12 volts ac to a dc rectifier and filter system where electronic regulation is not employed (but could be, if desired).

Now, do you remember from studying for your ham ticket that the output voltage on the secondary coil of a transformer is equal to the input voltage on the primary coil multiplied by the turns ratio? Or, in other terms, $N_1/N_2 = V_1/V_2$ where N_1 = primary turns, N_2 = secondary turns, V_1 = primary voltage, and V_2 = secondary voltage. Let's suppose you have a transformer with a 24-volt secondary and a 120-volt primary (Fig. 1). The turns ratio of this transformer would be 5:1.

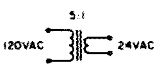

Fig. 1. 5:1 turns ratio with 120 V ac applied.

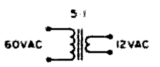

Fig. 2. 5:1 turns ratio with 60 V ac applied.

This means that there are five times as many turns on the primary as on the secondary, and with 120 volts ac applied to the primary, the secondary voltage is 120 x 1/5 or 24 volts ac. Now, suppose we applied 60 volts ac to the primary of our transformer (see Fig. 2). The secondary voltage would then be 60 x 1/5 or 12 volts ac. Just what we need! But how do we get 60 volts ac easily? Do you remember that voltages across series-connected inductors divide proportionally to the value of the inductance? Suppose we had two transformers of the same kind we have been discussing and series-connected the primaries to 120 volts ac (Fig. 3). The primaries of these transformers (which are inductors) have the same value of inductance and the 120 volts ac would divide equally across each transformer primary (60 volts per primary coil). This results in 12 volts ac on each of the secondaries. These can be parallel- or series-connected to give the desired results.

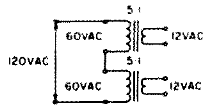

Fig. 3. Series-connected primaries.

If the secondaries are to be parallel-connected (Fig. 4), an ac voltmeter should be placed across wires A and B to make sure the windings are connected in phase. A reading of 12 volts ac will verify this. A zero or near-zero reading means an out-of-phase connection which can be corrected by reversal of a primary or secondary connection on either transformer. These measure-

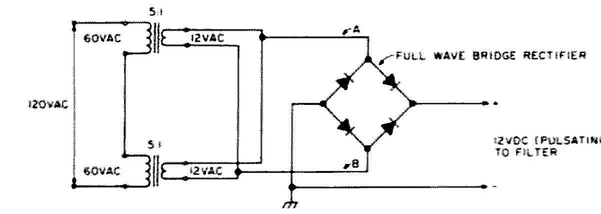

Fig. 4. Parallel-connected secondaries.

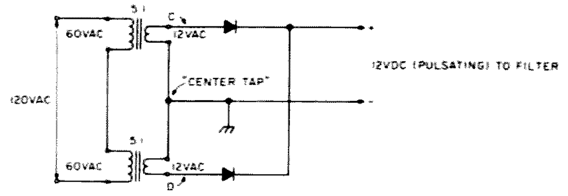

Fig. 5. Series-connected secondaries.

ments should be made *quickly* since a high current flows during an out-of-phase condition. The output of this arrangement should be fed to a full-wave bridge rectifier system as shown in Fig. 4.

Series-connected secondaries (Fig. 5) can be used in what is known as a full-wave, center-tapped rectifier circuit, since the center-tap is actually the point where the two secondaries are connected together. Here again, the windings must be connected in phase as determined by a 24-volt ac reading across wires C and D. An out-of-phase condition can be corrected by reversal of any one primary or secondary connection. One advantage of this arrangement is the use of two, rather than four, diodes (or a diode-bridge module) necessary with the parallel secondary connection.

With either of the two transformer combinations, the amount of current that can be drawn will be at least twice the current rating of one single transformer. Since there is twice as much iron, any current available over this amount will most probably be determined by the primary and secondary wire sizes rather than the magnetic saturation of the transformer iron.

Now you may be wondering, "Could I connect the primaries of three 36-volt or four 48-volt transformers in series to get 12 volts?" Sure, it would work fine, but the weight, bulk, and economic factors would probably catch up with you. It depends on how much room you have and how cheaply you can obtain transformers. Another question might be, "Could I connect a 120/6-volt ac transformer across my 240-volt ac line to get 12 volts ac?" My answer is: "It would probably work, but don't do it!" The primary insulation may not be able to take 240 volts. If it does short out, the "fireworks factor" would be greater, especially since both sides of the 240-volt line are 120 volts above ground!

You can do many things with transformers if you use some of your "forgotten" radio theory. Don't ever throw a "junk" transformer away just because it has an odd secondary (or primary) voltage.■

New Products

from page 75

$6.95; large pkg. (3 pieces—9" x 12")—$7.95. Write for information and prices on larger sizes and quantities.

PCP Type-A film is available from *Printed Circuit Products Co., PO Box 4034, Helena MT 59601.*

Morgan W. Godwin W4WFL
West Peterborough NH

NEW SERIES OF MFJ CW/SSB ACTIVE FILTERS

MFJ Enterprises has introduced two new CW and SSB active filters.

The top-of-the-line model is called the MFJ-721 Super Selector CW/SSB Filter. It has a 2-Watt audio amplifier, switchable noise limiting, and an input selector switch for two rigs.

The CW filter is an eight-pole (4 cascaded stages) active filter centered at nominally 750 Hz. It has four selectable bandwidths: 180, 150, 110, 80 Hz. In the 80 Hz position, the response is at least 60 dB down one octave from the center frequency. It drastically reduces noise and provides up to 15 dB improvement in signal-to-noise ratio.

With a pair of stereo headphones, simulated stereo reception provides the narrow filtered signal to one ear and the unfiltered signal to the other. The ears and brain reject interference but allow off-frequency calls to be heard.

The SSB filter dramatically improves readability by optimizing the audio bandwidth to reduce sideband splatter, remove low and high pitched QRM, remove hiss, remove static crashes, remove background noise, and eliminate 60 and 120 Hz hum.

A self-adjusting automatic peak clipper is provided for SSB. For CW, a valley clipper is also provided. This removes background noise smaller in amplitude than the signal.

It plugs into the phone jack and drives a speaker or phones with 2 Watts of audio. It can also be used as an auxiliary audio power amplifier. The size is 5 x 2 x 6 inches. It requires 9 to 18 V dc; an optional ac adapter is available. The price is $59.95 (include $2.00 for shipping and handling).

The MFJ-721 Super Selector CW/SSB Filter.

The MFJ-720 Deluxe Super CW Filter uses the same eight-pole active filter as in the MFJ-721. The frequency determining components are hand-selected to within one Hz of the nominal 750 Hz center frequency; this gives very steep skirts. The low-Q cascaded design minimizes ringing. A self-adjusting peak noise limiter is built in.

It plugs into the phone jack and drives the speaker or phones with 2 Watts of audio (using an LM-380 audio power IC). The size is 4 x 2 x 6 inches, and it requires 9 to 18 V dc. An optional ac adapter is available. The price is $44.95 (include $2.00 for shipping and handling).

The MFJ-721 Super Selector CW/SSB Filter and the MFJ-720 Deluxe Super CW Filter are both available from MFJ Enterprises, and have a 30-day money-back trial period. If you are not satisfied, you may return it within 30 days for a full refund (less shipping). MFJ also provides a one-year unconditional warranty.

To order, call toll-free (800)-647-8660, or mail the order to *MFJ Enterprises, PO Box 494, Mississippi State MS 39726.*

Jeffry Blackmon W2YI
7714 Lindbergh Avenue
Niagara Falls NY 14304

CB to 10

—part IX: a pair of Radio Shack rigs

In 1966, I converted a tube-type CB rig to ten meters and put it in my 1950 Desoto. It was fun to operate, but, unfortunately, there were not very many local hams to work. I took the rig out and eventually scrapped it and forgot about ten meter AM.

My interest in ten meters was rekindled at the Amateur Radio Association of the Tonawandas' September, 1976, "Show and Tell" meeting. Bill WB2MAM brought a pair of CB walkie-talkies which he had converted to ten. I got thinking about ten meters again.

In early 1977, Radio Shack sent out a flyer advertising the five-Watt TRC-11 for $29.95, so I bought one. While in the store, I spotted the TRC-74 100 mW walkie-talkie and decided to try my hand at converting it also. It seemed a natural to take along to hamfests and to use for emergency situations where inexpensive QRP rigs would be needed for QRM-free short-range communications.

The conversions are quick and require a minimum of test equipment. You can get by with an rf probe, a VTVM, and a dummy antenna, but a signal generator capable of ten meter operation is very helpful. An swr bridge could be used in place of the rf probe for the TRC-11 alignment. One word of caution: The adjustable coils and transformers are sealed in place. The larger coils are painted in place and are easily moved, but some of the smaller adjustments are sealed with a wax-like substance. If a coil or transformer is wax-sealed above the slug, very carefully remove the wax sealer before making any adjustments. I was lucky—only one coil suffered damage due to my overtorquing on its slug.

$$\text{Transmit crystal frequency (kHz)} = \frac{\text{output frequency (kHz)}}{3}$$

$$\text{Receive crystal frequency (kHz)} = \frac{\text{output frequency (kHz)} - 455\text{ kHz}}{3}$$

Example:
To transmit on 28.805 MHz:

$$\text{Transmit crystal frequency (kHz)} = \frac{28805\text{ kHz}}{3} = 9601.667\text{ kHz}$$

To receive 28.805 MHz:

$$\text{Receive crystal frequency (kHz)} = \frac{28805 - 455\text{ kHz}}{3} = \frac{28350\text{ kHz}}{3} = 9450.00\text{ kHz}$$

Fig. 1. Crystal information. Note: All crystals are 3rd overtone.

Crystals

Both rigs are single-conversion superhets and use the same crystals. Crystals are third-overtone types, and their fundamental frequency in kHz is easily determined, as Fig. 1 illustrates. I ordered my crystals from JAN Crystals and have been pleased with their performance. They cost $3.75 each, with an additional 25¢ each for postage (air mail) and handling, for a total of $4.00 per crystal. JAN had advised me that it might take up to a month to deliver them, but the crystals arrived two weeks after I mailed my order.

Converting the TRC-11

Receiver modification is simple. The oscillator starts up easily and has no adjustment. Refer to Fig. 2 for the following adjustment locations. Inject a ten meter AM signal through the antenna connector and adjust T1 and T2 (the input and output transformers, respectively, for the rf amplifier stage) for maximum output voltage across the speaker voice coil. This completes receiver alignment. My 455 kHz stages were tweaked, and the receiver gain came up a bit. Check yours before proceeding to transmitter alignment. By the way, the TRC-11 has a ceramic filter in the emitter lead of the first i-f transistor.

Transmitter alignment is a bit more complicated. Connect the rig to a dummy antenna, and put the rf probe across the antenna connector. Output may be monitored by inserting an swr bridge between the dummy antenna and the transceiver. Depress the microphone button and adjust T9, the oscillator output coil, until the oscillator starts, as indicated by a very weak output. Adjust T10 for increased output. Similarly, adjust L5 and L6 for maximum output. Go over these adjustments several times, until maximum output is obtained. T9 may need to be adjusted if dc input voltage varies and the rig has no output. Using Heathkit's rf probe and

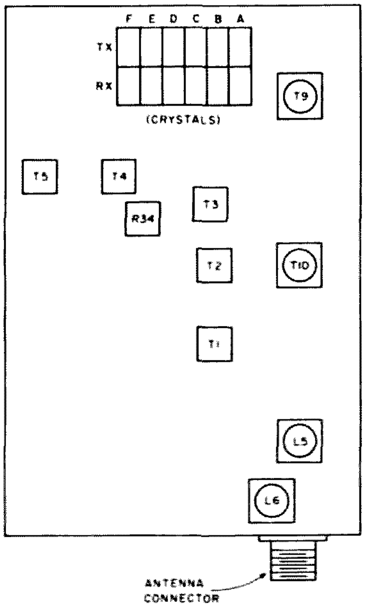

Fig. 2. TRC-11 adjustments layout.

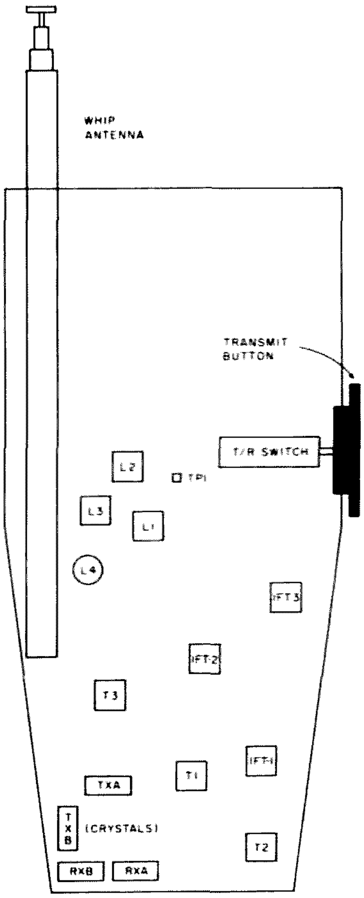

Fig. 3. TRC-74 adjustments layout.

VTVM, I measured one-tenth of a volt less rf output at 28.6 MHz than I originally had at CB channel 9, 27.065 MHz.

TRC-74 Walkie-Talkie Conversion

Refer to Fig. 3 for adjustment locations. The receiver converter stage may not oscillate right away, so adjust the slug of T2 outward until it does. This can be determined by listening for noise through the speaker. It should pick up when the oscillator starts. An alternate method is to inject a ten meter AM signal and adjust T2 until the signal is heard. After oscillations begin, adjust T1, the input rf transformer, for maximum signal strength. This may be measured across the speaker voice coil. At this time, readjust T2 for best signal. Cycle the rig on and off several times to be sure the oscillator will start right off. T2 may be tweaked as necessary. The 455 kHz transformers may be tweaked at this time, if you'd like.

The transmitter is equally simple to get operating on ten. First, extend the whip antenna full length. Connect the rf probe to TP1, directly adjacent to the TR switch. TP1 is connected to the base of the antenna loading coil, L1. The signal at TP1 may be too weak to measure with an rf probe. A ten meter receiver may be substituted. Depress the T/R switch and adjust T3 for output. After the oscillator is running, adjust L3 and L2 for maximum output. Place the rf probe on the antenna, or continue monitoring with the receiver gain reduced to prevent overloading, and adjust L1 for maximum output. Go through the adjustments several times. T3 may have to be offset slightly to assure oscillator turn-on every time the transmit button is pushed.

Antennas For the TRC-11

In my pickup truck, I use a Hustler mobile antenna with an RM-10 mobile resonator. It gives very fine results. The truck has quite a lot of ignition noise, and the engine must be shut off for best operation. Also, this makes driving a stick-shift vehicle safer.

At home, I use a Radio Shack 21-901 quarter-wave ground-plane antenna mounted three feet above ground. It cost $16.00 ($14.95 plus $1.05 tax). I've pruned five inches off the vertical element and the radials, and the swr, at 28.6 MHz, is about 2 to 1. I'm not trimming it further until western New York's hams decide on final frequencies. At present, I operate on 28.6 and 28.805 MHz with WB2MAM, WB2NFZ, and a few other fellows.

Results

Here in the Falls, I've about a ten-block range between the 100 mW hand-held unit and the mobile 5 Watter. The receiver *noise* problem in the mobile limits the range. If the truck were suppressed, I feel the range would nearly double.

Between hand-helds in Buffalo, Bill WB2MAM and I worked about six blocks.

Before I installed the ground plane, I used a hastily-built sloping dipole only 4 feet off the ground and received a 5 x 7 signal report from New Jersey. Reports should become better when the ground plane antenna is up around twenty-five feet.

Comments

Ten meter QRP AM operation is fun and fairly inexpensive. Ten meters offers an alternative to two meters and could very nicely augment it for emergency situations. Range between five-Watt rigs is good, and the band is usually interference-free.

Radio Shack puts out very good service manuals for these rigs. Their stock numbers are 21-139/141 for the TRC-11 and 21-174 for the TRC-74.■

R. W. Burhans
Dept. of Electrical Engineering
Ohio University
Athens OH 45701

In Search Of Stability

—temperature-compensated crystal oscillators

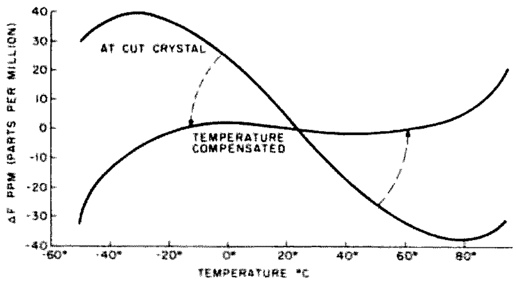

Fig. 1. Generalized temperature-versus-frequency characteristics for AT-cut crystals in the 4 to 12 MHz range.

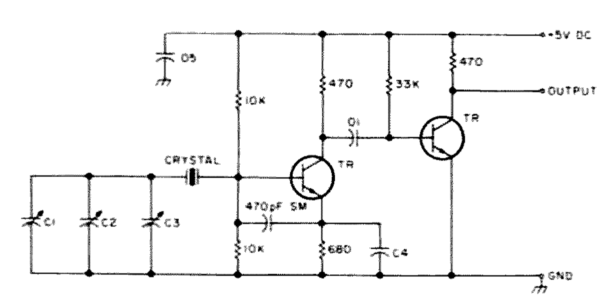

Fig. 2. Temperature-compensated crystal oscillator.

Temperature-compensated crystal oscillators (TCXO) are not completely a black art. A typical AT-cut crystal will have a measured temperature-versus-frequency curve as shown in Fig. 1. Inspection of the curve shows that, if you rotate it around the zero-resonant frequency point at about 25° C., the change of frequency can be flattened out over a considerable range. This is precisely what manufacturers do when producing TCXOs. Temperature-compensating capacitors connected in series with the crystal with a high enough negative temperature coefficient are usually found in a circuit such as is shown in Fig. 2. Here, two different negative-coefficient capacitors are blended to produce the desired change in capacitance to counteract or compensate for the decrease in frequency of the "normal" AT-cut characteristics. The exact circuit will, of course, depend on the particular crystal in minute detail, but almost any surplus-type HC-6 holder crystal in the 4 MHz to 12 MHz range may be compensated in a circuit of this general type.

Experimental checking on the relative flatness over the room temperature range can often be verified by cooling the whole circuit down with a blast from a circuit cooler can and then watching the frequency change with a counter. It is, of course, important to have a good reference timebase, better than the oscillator under test for this evaluation. By adding more or less of a particular compensating-coefficient trimmer capacitance, the crystal can be made to remain flat within a few cycles at the 5 MHz region or within 1×10^{-6} over a room temperature variation of 20° to 30° C. A very small NPO trimmer is then used for adjusting the final frequency to the desired value, after determining the effect of adding or subtracting relative ratios between the two compensating capacitors.

It is much easier to experimentally check a particular crystal in this type of circuit than it is to determine the crystal characteristics, particularly for surplus junk box units. Fixed ceramic negative-temperature-co-

Parts List

For a 5 MHz AT-cut crystal:

C1	3-8 pF Mouser* 24AA010 NPO (fine frequency trimmer)
C2	4-24 pF Mouser 24AA012 N-500 (temperature compensating)
C3	8-48 pF Mouser 24AA014 N-1500 (temperature compensating)
C4	120 pF silver mica type 5% adjusted for each crystal
TR	NPN silicon HF-type transistor

*Mouser Electronics, 11511 Woodside Avenue, Lakeside CA 92040.

efficient capacitors may often be used after once determining approximately the range with a variable trimmer type. The oscillator is first adjusted for the center frequency by changing the emitter feedback bypass capacitor, C4, for easy starting. If a particular surplus crystal cannot be brought within ± 50 Hz (at a 5 MHz level), chances are that it is not really ground for a zero-resonant point at the marked frequency. It is not possible to simultaneously compensate and pull the crystal to exact center frequency if it is not already ground close to that point during manufacture with a comparable load capacitance.

A few 4 MHz crystals used in microcomputer clocks can be altered to produce exactly 4.000000 MHz for accurate time-interval measurement, but often they are too far off the desired center frequency. In most computer systems, the exact center frequency is not particularly important. However, for those who wish to use their microprocessor as a frequency counter or as a time-interval reference at the microsecond level, as in loran-C, a stable and accurate clock is required.

One MHz crystals will work in the circuit of Fig. 2 by changing the C4 feedback bypass to something like 1000 pF instead of 120 pF. However, these crystals will usually not be temperature compensated because lower frequency crystals are usually DT cut with different characteristics.

Crystals in the range of 4 MHz to 12 MHz have the best characteristics for this type of TCXO use. If a lower frequency is required, a divider is suggested, such as a 4 MHz crystal with a divide-by-4 (7473 or 4027), to produce a 1 MHz output frequency. The 4 MHz oscillator can be compensated, but the output is now the desired lower 1 MHz clock frequency. ■

James R. Allison WA4KIL
14 Veraqua Ave.
Coral Gables FL 33134

Robert H. Walker K4FK
400 Tivoli Ave.
Coral Gables FL 33143

On Your Mark!

—*RTTY tips for the TS-820*

With the skyrocketing popularity of transceivers, there has been a noticeable trend in recent years toward RTTY contacts in which the principals may be 1 kHz or more apart in frequency. Not only does this waste our spectrum, but, if you're transmitting on one frequency and receiving on another, your percentage of replies to calls is decreased.

Your shift can be slightly off, but, if your "mark" frequency coincides with the "mark" frequency of the station you are calling, there is a good chance that he can print you. Move your "mark" a few cycles from the frequency on which he is listening and a signal which is much weaker than yours, but on frequency, will come nicely through his filters. Three guesses which caller will be answered!

I recently acquired a new Kenwood TS-820S. By transceiver standards, it is well equipped for RTTY operation. I noticed, however, that, when I called another station, I very seldom got an answer. When I called CQ, I frequently got answers, but usually I had to turn on the RIT (receiver incremental tuning) and go looking for them. A quick check revealed that my transmit and receive frequencies were separated by over 150 Hz. That represents quite an error when we are talking about a total shift of 170 Hz!

Empirical experimentation has shown that you can easily get your new TS-820S to transmit and receive RTTY on the same frequency without readjusting either the 820 or the converter. If you own the external VFO-820, you can actually "zero beat," after a fashion, and achieve very precise frequency control.

These instructions presuppose that you are transmitting and receiving 170 Hz shift. Not being equipped to transmit 850 Hz shift, we have not attempted to extrapolate our findings to that shift. We also assume that you are using the FSK system built into the 820.

Presetting your RIT before operating RTTY is the key if you operate without the VFO-820. Turn on the crystal calibrator and tune it in with the main tuning knob as though it were a "mark" signal. Now turn on the RIT and offset it in the + direction until the calibrator signal peaks on your "space" filter. Do not move the main tuning knob once you have peaked up "mark." On our two test units, the white line on the RIT control was just to the right of the red line on the i-f shift control when the i-f shift was centered and the preceding adjustment correctly made.

Leave the RIT as it is now set and normally tune in a RTTY station with the main tuning knob. When you call, you should now be transmitting very close to the frequency on which you are receiving. During the contact, follow any drift with the RIT. Be sure to reset the RIT prior to beginning another contact.

The accuracy of this method is almost completely dependent upon the bandwidth of the filters in your converter. You can obtain a much more precise adjustment if the filters are quite narrow and the converter incorporates a tuning meter to supplement the scope. Even with wide filters, however, this process is accurate enough to materially increase the percentage of returns to your calls.

Do you have the VFO-820? If so, you're really in good shape! Extremely accurate zero beating is now possible. You must transmit on one vfo and receive on the other. I opt to transmit on the VFO-820 because it is removed from any ambient temperature change within the TS-820S case. Tune in a RTTY signal normally with one of your vfos. Turn the function switch to RMT CALIBRATE and zero beat your other vfo to the first. On our test units, we learned to approach from the low side and stop just short of complete zero beat (a low, almost subliminal growl seems to be the ideal point). With the full load of the transmitter on the power supply, your transmit and receive frequencies will be nearly identical if you stop just short of zero beat.

If possible, practice both of these procedures with a local who is not running transceive. He can tell you how close you are coming to "matching his mark." You'll have no trouble learning to get your TS-820S within just a few cycles of any transmitting station's frequency.■

Karl T. Thurber, Jr. W8FX/4
233 Newcastle Lane
Montgomery AL 36117

A WWW Primer

—become a calibration freak

The international time and frequency community, as it is called, is a very small one generally unknown to the public, yet very important to many of the basic activities of daily life. Radio and TV stations, ship and aircraft navigators, military and government installations, electronics laboratories, and even musical instrument makers all depend on very precise time and/or frequency information.

In the U.S., the National Bureau of Standards (NBS) has provided our primary standards of both time and frequency for more than 50 years—ever since WWV began its service in 1923, first from Washington and later from Greenbelt, Maryland. In 1966, the site was moved to Ft. Collins, Colorado, about 60 miles north of Denver, in order to replace aging equipment, provide better signal coverage nationwide, and be near the NBS frequency standard at Boulder.

Of course, WWV and WWVH are not receivable in all areas of the world. Many other similar stations, such as JJY (Tokyo), VNG (Lyndhurst, Australia), MSF (Rugby, England), and ZUO (South Africa) provide similar services for their own users. The National Research Council of Canada operates CHU in Ottawa for Canadian users of time and frequency information.

Besides the time services of the two NBS HF stations, WWV and WWVH (Hawaii), standard frequencies are also broadcast and are available to amateurs, who probably account for more than 35% of the listeners and who are more interested in the standard reference marker frequencies. With a general-coverage receiver which can tune the frequencies (2.5, 5, 10, 15, and 20 MHz), a reliable marker frequency is always available for calibration and measurement.

At lower frequencies, such as in the VLF range, it's possible to record the phase differences between two frequencies; two important broadcasts used are the NBS station WWVB, also in Ft. Collins, and the loran-C radio navigation signals. Phase recording is possible because the signal path at VLF is very stable, unlike that at HF. At higher frequencies, there are definite calibration problems inherent in the propagation medium itself. The atmospheric variations of HF signals and the short wavelengths involved prohibit reliable phase comparison.

Actually, WWVB, which broadcasts with 13 kW on 60 kHz in the VLF range, is effectively more accurate than WWV. While frequency tolerance on both is normally kept within a few parts in 1,000 billion, the fact that propagation anomalies at VLF are very minor compared with those at HF allows well-equipped users to maintain calibrations on the order of 1 part in 100 billion. In fact, even WWVH uses WWVB as a cross-check on its own cesium standards and broadcast signals!

Direct frequency comparison with WWV can be accomplished, practically speaking, to about 1 part in one million. Four methods of calibrating rf and audio sources using WWV are:
(1) The relatively simple beat-frequency method;
(2) The oscilloscope Lissajous pattern method;
(3) The oscilloscope drift pattern method;
(4) The sophisticated frequency calibrations by time comparisons technique.

Let's take a look at each method in turn, as well as some special techniques.

The Beat-Frequency Method

Beat-frequency comparison with WWV is a simple technique used by SWLs and hams to calibrate equipment, such as receivers, transmitters, and frequency counters. Typically, a 100 kHz or 1000 kHz calibration signal rich in harmonics is coupled to the receiver along with the

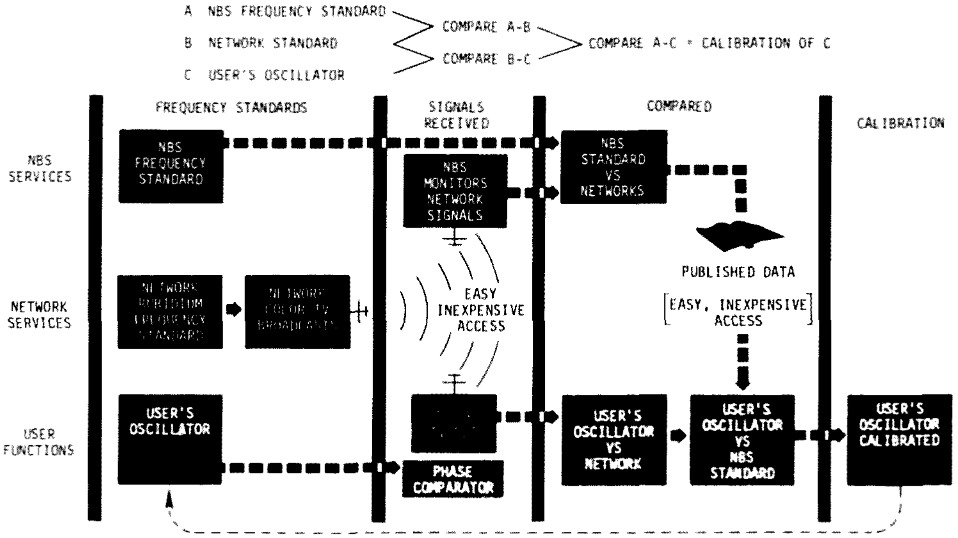

Fig. 1. Frequency calibration using color television signals from NBS Special Publication 432.

signal from the antenna, mixing a known accurate frequency (such as that of WWV) with the output of the calibrator. The difference frequency of the two rf signals results in an audio output signal known as the beat frequency. This audio frequency decreases to zero when the two frequencies are equal and is know as zero beat.

To calibrate a frequency standard or crystal calibrator with an output frequency lower than that of WWV (normally the case), a harmonic equal to the WWV signal is needed. As an example, if a 100 kHz signal from a calibrator is to be zeroed against the WWV 10 MHz frequency, it must also contain a harmonic 100 times itself. Any calibrator or signal generator used should have a square-wave output that is rich in harmonic content.

In practice, if the beat note is above about 50 Hz, a speaker, headphones, or frequency counter can be used to detect zero beat, while below that frequency, a dc oscilloscope can be hooked up to the receiver's detector output to detect zero beat. An S-meter can also be used, with the beats counted visually as the meter swings through zero beat; this is probably easier to follow very close to zero beat.

To determine whether the calibrator is high or low in frequency, its frequency must be changed to note which way the beat frequency decreases. If increasing the oscillator frequency decreases the beat note, the oscillator frequency is lower than the WWV frequency. The converse is also true.

A similar procedure can be used to set the crystal timebase in a frequency counter by coupling a bit of its output to the station receiver and zeroing it against WWV in like fashion.This method is most popular among casual users, such as most hams and SWLs—we use it every time we zero in a crystal calibrator, though we may not give the process much conscious thought or perform the procedure as carefully as we should. However, surprisingly good results can be had if the zero beating is done carefully and, most importantly, if the frequency-determining crystal circuit is temperature-controlled; a crystal calibrator or timebase tends to change frequency with heat. Temperature stability is especially important in frequency counters, where long-term accuracy and stability are necessary if measurements are going to be meaningful.

There are dozens of variations on this method used by hams interested in really precise frequency measurement, which is closely related to the business of frequency calibration. Many of these techniques involve the use of a surplus BC-221 frequency meter in conjunction with a 100 kHz oscillator that has been digitally divided down to provide 1 kHz reference audio and rf outputs, a frequency counter, and sometimes an oscilloscope. One very simple measurement technique to obtain very respectable accuracy involves using an old but stable tube-type vfo, zero beating it against the signal to be measured and simultaneously feeding the vfo output to the frequency counter for measurement. (Check the discussion of results of the periodic ARRL frequency measuring tests run in *QST* for a description of the various lash-ups used to provide accuracies of 0.4 parts per million or better—the biggest challenge is in accurately detecting zero beat.)

Following is a discussion of some of the more sophisticated "lab" techniques. Some hams do in fact use them, particularly for audio measurements, but, for the purposes of this article, I will just touch on them lightly. For information on how to use these techniques, consult one of the references mentioned at the conclusion of the article, the *Radio Amateur's Handbook*, or a good electronics engineering text. Most of the techniques, however esoteric, are practical for use with a good oscilloscope and some patience.

The Oscilloscope Lissajous Pattern Method

WWV signals can be used to calibrate audio oscillators by producing phase patterns on oscilloscopes. The WWV audio signal is applied to the vertical input of the scope, while the oscillator to be calibrated is connected to the horizontal input. The resultant pattern tells the user (1) the frequency ratio between the oscillator setting and the WWV tone and (2) the movement in phase of the oscillator relative to WWV.

You can check the accuracy of the dial setting of the audio oscillator by first picking a dial setting giving a frequency ratio to a WWV audio tone that is an integer and then turning the dial slowly until the pattern becomes stationary. By reading the dial setting, a calibration can be made and the dial then reset to another frequency that is an integer ratio. This procedure also can be applied to fixed frequency sources if they are in correct ratio to the audio

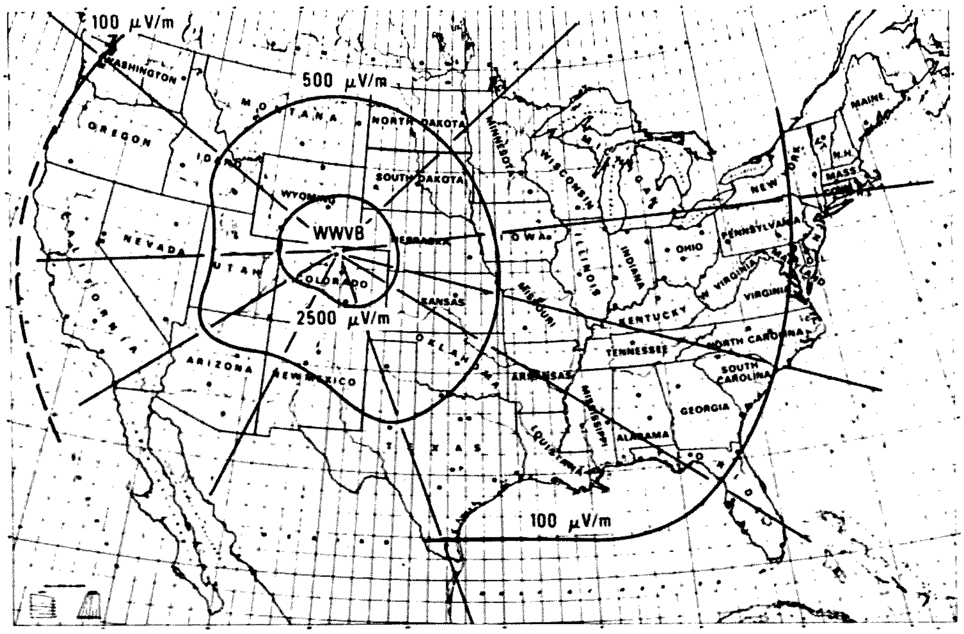

Fig. 2. Field intensity contour map of WWVB at 13 kW erp (from NBS Special Publication 432).

tones on WWV. At this point, the calculations get a bit sticky, so let's skip them and simply mention that, by using this technique, you can calibrate over a 10:1 range in frequency up and down from the 500 and 600 Hz audio tones broadcast by WWV (from 50 Hz to 6 kHz).

Frequency error or "offset" can also be computed using this method. When viewed on the oscilloscope, if the frequencies are exactly equal, the pattern will remain stationary. But if one frequency differs or is offset from the other, the pattern will "rotate." Since one complete rotation of the pattern is equal to one cycle, the number of cycles per unit of time is the offset frequency. Using this information and a little math, you can compute the frequency error of the audio generator. Nice, huh?

Actually, it takes much too long to measure signals with very small offset errors. For the more precise work needed for specialized purposes, a more accurate and faster procedure which measures phase shifts on an oscilloscope is frequently used. Let's take a look at this technique, with an eye toward the theory rather than the details.

Oscilloscope Drift Pattern Method

This is a very good method of comparing two frequencies, using an oscilloscope with external triggering which is able to detect much smaller audio frequency offsets than the Lissajous method just discussed.

To use this technique, an oscilloscope having a calibrated sweep timebase is used, being externally triggered by the audio source to be measured. The receiver, tuned to WWV, is connected to the scope's vertical input.

With the sweep set at 1 ms/division, the trigger level is set so that a "zero crossover" of the corresponding 500 or 600 Hz WWV audio signal is about midscale on the scope. Then, by visually observing and measuring the phase shift during any given time interval, the frequency offset is determined from the formula: *offset equals phase shift divided by time interval.*

It turns out that if the zero crossover moves to the right on the scope, the audio frequency is higher than the WWV audio tone, and, if to the left, the signal is lower in frequency.

Obviously, this method is a good one for calibrating audio oscillators and signal generators.

Frequency Comparisons by Time Comparisons of Clocks

This method, aside from its name being a mouthful, is a bit "way out" for the average ham and even most laboratories, but it is an interesting approach and can be highly accurate. Using it, frequency is measured indirectly, overcoming most of the effects of poor signal conditions. By averaging time comparison results, errors caused by propagation conditions can be almost eliminated. But the technique depends on having a very stable frequency standard with a near-zero drift. The offset must be kept nearly constant during the long periods needed to average the comparison results.

Simply stated, and again skipping the math involved, if a clock controlled by a precision oscillator gains in time with respect to WWV, then the oscillator frequency controlling it is higher than the frequency of the master reference clock at WWV; the converse can also be the case. In any case, the average frequency of an oscillator during the period between two measurements can be calculated and an adjustment made to keep the average frequency constant.

Finally, for those who are interested in accurately setting that new digital clock, you'll be interested in knowing that WWV's time is kept to within a fraction of a microsecond of the internationally agreed-on NBS UTC time scale, while WWVH's accuracy is kept to within 5 microseconds of WWV. For those who wish to play around with timekeeping on this order, sophisticated time synchronization techniques, such as the so-called direct and delayed-trigger methods and the photographic-tick procedure (both of which involve displaying the WWV tick on an oscilloscope), can be used to calculate time to within about 100 microseconds of the time at the station sites. (Propagation and receiver delays prevent being "on the nose.")

While we've talked mostly about WWV, WWVH can be used equally well for most frequency calibration purposes. NBS strives to keep them both synchronized as closely as possible and usually does just that.

Digging a Bit Deeper

Readers interested in more details about frequency measurement (and

Fig. 3(a). WWV commemorative QSL card. This was issued in commemoration of the station's move to Fort Collins, Colorado, from Greenbelt, Maryland, in December, 1966.

Department of Commerce
NATIONAL BUREAU OF STANDARDS
RADIO STATION WWV
FORT COLLINS, COLORADO

2.5 MHz-40°40'55"N, 105°02'31"W	15 MHz-40°40'45"N, 105°02'25"W
5 MHz-40°40'42"N, 105°02'25"W	20 MHz-40°40'53"N, 105°02'29"W
10 MHz-40°40'48"N, 105°02'25"W	25 MHz-40°40'51"N, 105°02'27"W

This is to confirm your **first day reception** report of WWV.

Leo W. Honea
Engineer-in-Charge

Complete Description of Services of NBS Radio Stations Given in Miscellaneous Publication 236 Available from Government Printing Office—15c

Fig. 3(b). Reverse side of commemorative QSL card. Notes: 1) 25 MHz transmissions from WWV have since been curtailed; 2) Special Publication 236 has been replaced by Special Publication 432.

timekeeping, too) can peruse NBS Special Publication 432, *NBS Time and Frequency Dissemination Services,* and NBS Technical Note 668, *The Use of National Bureau of Standards High Frequency Broadcasts for Time and Frequency Calibration,* both of which are available from the Superintendent of Documents for a nominal fee. Much of the material in this article was derived from technical data contained in these publications, which go into the business of sophisticated timekeeping and frequency calibration in some detail.

Pub. 432 also gives a fascinating description of the latest in frequency calibration techniques using network television. This new service is exceptionally reliable because the TV networks use rubidium oscillators to produce the 3.58 MHz color subcarrier transmitted along with all color TV programs. If you need to make a calibration, you simply compare the color TV signal with your local oscillator; NBS monitors the network signals and, monthly, publishes the measured differences between the networks and the NBS standard in Boulder in the *NBS Time and Frequency Services Bulletin.* With procedures developed by NBS, you can use this information to compute the difference between your local oscillator and NBS—thus your calibration is traceable to the Boulder standard without depending on WWV reception.

Two methods have been developed for doing this: (1) an inexpensive color-bar comparator method, requiring only a simple circuit connected to a standard color TV set and a stopwatch, and (2) a more complex and expensive digital offset computer method, which provides an automatic means of calibrating precision crystal or atomic oscillators, involving comparing a signal from the oscillator with the TV color signal and displaying digitally the frequency difference (expressed in parts per 100 billion). This requires a special computer, however, and is not for casual use, but it can be accurate to one part in 100 billion. NBS can give you more information on these interesting new techniques, including circuit details, if you write to them at Boulder, Colorado 80302. Fig. 1 shows system details. (Time comparisons using TV synchronization pulses are also possible, down to less than one microsecond accuracy.)

Anyone for WWVB?

Earlier, I suggested that WWVB was the "way to go" for really accurate measurements of both time and frequency. Broad-

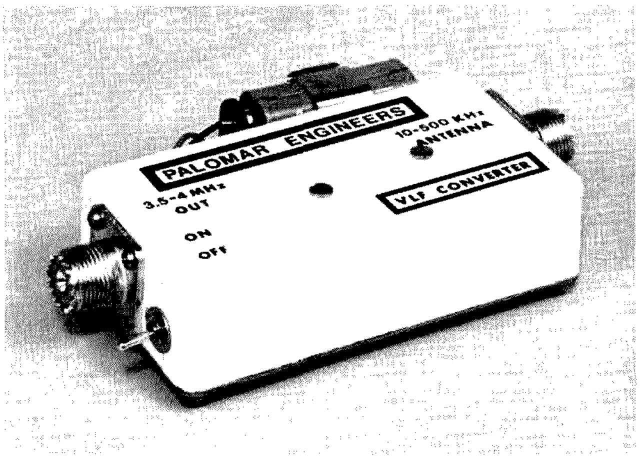

Palomar's new VLF converter can be used to tune WWVB on 60 kHz, as it "translates" the VLF spectrum from 10-500 kHz to the 75/80 meter band. Practically any antenna can be used with this type of converter. The exact length is not important, since any reasonable antenna will be short compared with the long wavelength. Good results can be had from a long horizontal wire (single-wire) or vertical antenna with the lead-in connected to the center pin of the coax antenna connector; a resonant antenna isn't necessary. Loop antennas are also good for VLF.

casting on 60 kHz, it transmits standard time signals, time intervals, and special UT1 time corrections, much like WWV, but it is practically unaffected by the propagation anomalies that plague HF stations such as WWV, WWVH, CHU, and JJY. The problem, of course, is that most general-coverage receivers don't tune 60 kHz. But, with the advent of the experimental band at 160-190 kHz (1750 meters), some good receiver up-converter circuits that allow tuning VLF on an HF receiver or transceiver have been developed and published in the amateur literature. Also, Palomar Engineers (Escondido CA) has come up with a simple but stable crystal-controlled 10-500 kHz up-converter that moves the VLF/LF range tuned up to the 75/80 meter band (3500-4000 kHz).* This kind of converter design carries a plus in that you can also DX ship-to-shore communications, the European LF broadcast band, and radio navigation beacons.** And, if WWVB's experimental sister station, WWVL, ever comes back on the air on *20 kHz* (it was turned off in 1972), you should be able to receive it also.

WWVB covers most of the U.S. with a fairly good signal. A field intensity contour map is shown in Fig. 2.■

*Actually 3510-4000 kHz, since the converter lower limit is 10 kHz, for a tuning range of 490 kHz.

**There are other standard time and frequency stations operating in the VLF region. These include GBR (Rugby, England) on 16 kHz; JJF2, Chiba, Japan, on 40 kHz; HBR, Pragins, Switzerland, on 75 kHz; and others, though not all these are necessarily loggable in the U.S. The *World Radio and TV Handbook*, distributed in the United States by Gilfer Associates, carries comprehensive listings of these stations.

73 Magazine *Staff*

The Swiss Fork Special

—half-a-beam space saver

The antenna area is generally one where size and performance are directly related. However, sometimes by imaginative physical dimensioning of an antenna, one can obtain performance without an elaborate antenna structure. This is pretty much the case for the HB9 tuning fork antenna. This antenna was described several years ago by HB9RU; a number of them which have been built have given a good account of themselves. It is a compromise antenna, but, nonetheless, it can provide some pretty impressive features:

1. Gain of several dB in the forward direction.
2. A front/back ratio in the order of 10-15 dB.
3. Direct connection of a 52-Ohm coaxial feedline without the need for a balun.
4. A bandwidth of about 250-300 kHz over which the swr stays below 1.5 to 1.
5. Simple construction.

As shown in Fig. 1, the antenna is vertically polarized and is, more or less, half of a regular horizontal 3-element beam turned vertical, although some of the dimensions are slightly different than the norm for regular 3-element beams. The element length and spacings are as follows:

Driven element: .31λ
Reflector element: .29λ
Director element: .17λ
Spacing, driven element/reflector: .15λ
Spacing, driven element/director: .10λ

The beam can be built for any band, but is is most conveniently built for the 40-10 meter bands. For the 20-10 meter bands, it can be built in such a fashion that it can be broken down easily and used as a portable antenna. It should also be useful for mounting on certain types of flat roofs.

In field usage, it was found that the antenna characteristics, such as swr versus frequency, did not change significantly if the metal boom was elevated at least several feet off the ground. It was claimed for the original design that ground radials were not necessary. But, obviously, when dealing with almost any vertical antenna and especially one which is not full size, good grounding and a proper ground screen cannot help but improve performance. So, if one were to use the antenna in a fixed location, a good ground screen beneath the antenna is certainly to be recommended. However, for portable operation, one can use the antenna "as is" and obtain performance that would be hard to duplicate by any other form of completely self-contained antenna structure. No support structure is required for the antenna other than some means to get the boom at least several feet off the ground.

The only adjustment necessary is the matching of the transmission line to the driven element. As shown in the original design of Fig. 1, a capacitor was used in series with the driven element and simply adjusted for minimum swr. Since the capacitor is placed at a low impedance, high current point, a receiver-type capacitor will suffice even for several hundred Watts output into the antenna. Care must be taken that the capacitor leads are solidly connected to the

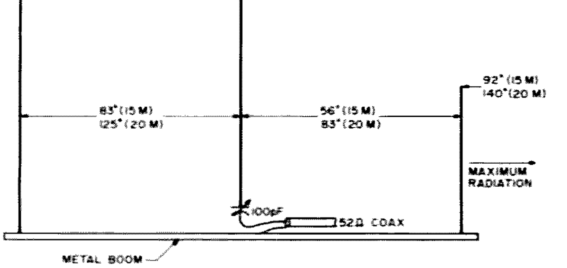

Fig. 1. The vertical "tuning fork" beam, with dimensions for 15 and 20 meters.

boom and to the driven element. This is also true for the connection of the reflector and director elements to the boom. An alternative to the use of the series capacitor method of matching is to use a regular gamma match as found in any antenna manual. If this type of matching method is used, the driven element need only be 0.25λ long instead of the 0.31λ length specified.

There are many methods that one can use to construct the antenna. One way is by using telescoping aluminum tubing in a manner similar to that used for regular beam construction. By the use of a suitable PVC T-type pipe fitting, one can isolate the driven element from the boom if the series capacitor method of matching is used. The series capacitor need only be enclosed in some protective plastic housing attached to the PVC joint.

For knockdown, portable construction of the antenna, one should consider the use of the old MS series of military surplus mast sections. These are tubular steel, copper-coated mast sections which come in 3-foot lengths and screw into each other. Many amateurs don't know of them, but they represent one of the better bargains ($.50-$1 per section) still available for building portable antennas. The mast sections come in a series of different diameter sections which screw together; a vertical element can be self-supporting to 15 feet easily, and higher yet under still wind conditions. Various insulated bases fit the series of mast sections, so it is easy to insulate a driven element from a boom. One source of these mast sections and accessories is Fair Radio, PO Box 1105, Lima OH 45802. ■

Alan Marcus WB9FRM
2828 Lexington Lane
Highland Park IL 60035

The End of the Rat's Nest

—a sensible operating console

Most of the amateurs I know are very creative when it comes to designing circuits, but use very little imagination in the designs of their operating benches.

The typical amateur uses a desk or a table for his radios, tacks a coax switch to the wall, places an swr bridge on the receiver, and puts a Cantenna on the floor. Coax, wires, and cables run in seventeen directions, and logbooks, QSL cards, and manuals are stacked in a corner.

A beautiful bench need not be costly, and it can be much more functional than a tabletop. It should have a compartment to house each piece of equipment plus storage for books, logs, and odds and ends. Ideally, the entire bench should be movable with little effort.

With these parameters in mind, I set out to build an operating bench. Since I have four thumbs on each hand, I decided to modify an existing piece of furniture rather than start from scratch. I found that old breakfronts, storage cabinets, and the like would work nicely. I had an old cabinet/bar piece of furniture which was in excellent shape, and it seemed suitable for the purpose. However, like many Danish Modern pieces, it had spindly, wobbly legs.

I won't bore you with all of the details of the conversion, but I would suggest you follow some of the steps that I did. These include:

1. Start with Danish Modern furniture, if you can. Then, the finished piece will look more like a custom-made bench than a converted piece of furniture. However, other types of furniture can be used to obtain very desirable results.

2. If the piece has spindly or wobbly legs (mine had thin wrought-iron legs set at an angle), remove the legs. Build a 2" x 4" framework almost as high as the legs were and attach paneling to the framework.

3. Buy 4 heavy-duty plate swivel casters and screw them to the bottom corners of the 2" x 4" framework.

4. Count the number of items that require 110 V ac. Add two or three to the number and buy enough duplex outlets and boxes to accommodate that many plugs. Decide where those outlets should be situated (on the back of the bench) so that each ac cord takes the most direct route from appliance to outlet. My cords are routed from the equipment through holes in the back panel of the console to the nearest outlets.

Mount the boxes, connect them with conduit, and wire the outlets. I wired some of mine so they are always on (clocks, tape recorder, etc.) and the rest are controlled by a master switch that kills the power to the transceiver, rotor, etc. Shorten all line cords. If you don't want to cut them, wrap them in small bunches and tie the bunches with cable ties.

5. If your piece of furniture doesn't have a drop-down writing surface (mine did) obtain a piece of plywood or formica-covered particle board and hinge it to the front of the furniture at the proper height. The writing surface is kept level, without additional support, through the use of lid support brackets or folding shelf brackets. Both types may be obtained from Craftsman Wood Service Company, 2727 S. Mary St., Chicago, Illinois 60608.

6. If you had to build the 2" x 4" framework, nail or glue some attractive paneling to the front and sides and attach corner moldings for a nice finish.

7. Most radios are too deep to fit in normal furniture. You may have to do as I did and cut away part of the back panel of the furniture. Then bolt pieces of plywood to the shelves below

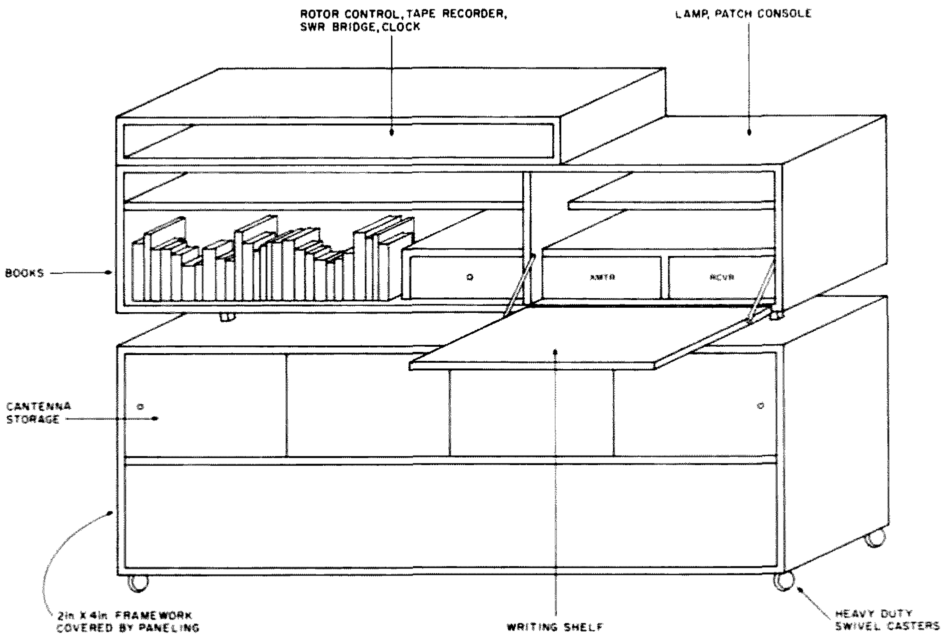

Fig. 1.

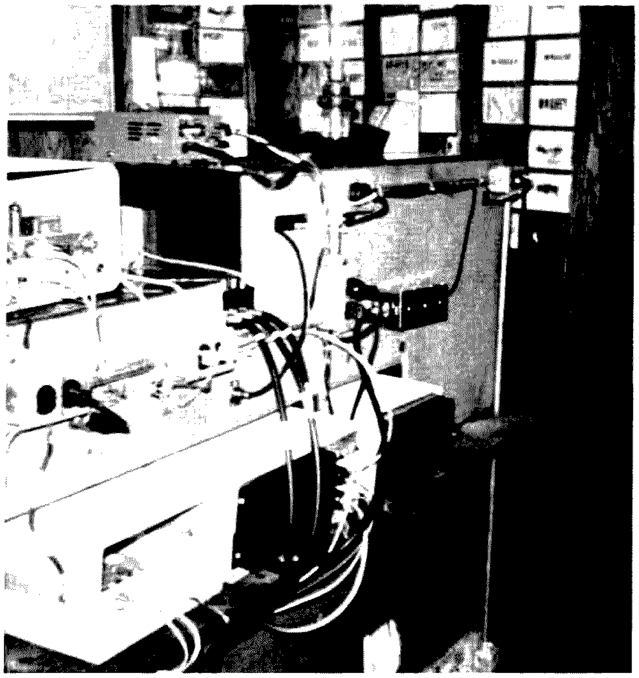

the cutouts. Your rigs will extend beyond the back panel but give the appearance of fitting entirely within the cabinet. Naturally, your bench will not fit flush against the wall once it is modified in this fashion.

8. Use cable ties and staples to keep the wiring behind the console neat. Mount coax switch, filter switch, etc., on the inside of the back panel.

I have been in dozens of ham shacks but have never seen an operating bench as functional or attractive as mine. It's ironic that I was going to throw out that old dilapidated bar unit, and the XYL said, "Save it; it may come in handy for something." ■

Courtney Hall WA5SNZ
7716 La Verdura Drive
Dallas TX 75248

2001 - 3

—a ham odyssey

It was the day for our weekly mail delivery, and I walked a little faster than usual on the way home from work. The small pile of envelopes was on the table by the door when I came in. Just the usual bills, I thought, as I thumbed through them. But wait a minute; here's a personal letter. Don't get many of those these days. I opened it quickly.

Hotel Winston
Chicago, Illinois
February 2, 1998

Dear Frank:

I ran into Steve Brewster here the other day, and he gave me your address. Guess we haven't seen each other since 1978 or so. Twenty years! Remember the fun we used to have with amateur radio when we were neighbors? I dropped out of it years ago; don't even know if it still exists, what with the limited fuel for home electricity.

I'm arriving in Dallas two weeks from this coming Sunday and will be there a few days on business. My train from Oklahoma City should get into Dallas about two o'clock in the afternoon. Sure hope we can get together!

Best regards,
Jim Foster

Jim had been a very good friend, and our common interest in ham radio led us to spend many enjoyable Saturday afternoons together working on antennas, conducting experiments, or just shooting the breeze. I looked forward to his visit. Martha was as pleased as I at his coming, and we made plans for him to stay at our house.

His train was three hours late, which wasn't unusual. The icy wind cut into my face as I walked out of the unheated terminal building to meet the train. Jim was one of the first ones off the train. I didn't recognize him at first; he was much thinner than I remembered him. From the white stubble on his chin, I estimated that he hadn't shaved since Thursday. Then I realized he wouldn't know me with my beard. I gave up shaving and paying for haircuts six years ago; they were luxuries I couldn't afford anymore. I just trim up the edges with scissors now and then.

"Jim!" I called to him when I had worked my way through the crowd to within about ten meters of him. He turned toward my voice, but there was a blank gaze in his eyes as they swept past me, and I knew that I appeared a stranger to him. I waved to him and called again. His eyes darted back to me, stared a moment, frowned, then gave that funny grin of his with his eyes squinting almost shut.

"Frank! Is that you?" His grin widened as we shook hands. "My God, Frank, you look like Santa Claus! I'd never have known you." We stood there a moment, laughing and slapping each other on the shoulders.

"Come on, Jim," I said, "it's two miles to the feeder train, and we can just make the last run if we walk fast." He picked up his bag, and we started back through the terminal. "You're staying at our house tonight; we've got some canned fish we've been saving for a special occasion, and this is it!"

"Well, that's sure hospitable of you, Frank. It'll be a welcome change from hotel rooms. Thank you!" We didn't need much incentive to walk fast in the cold February wind, so we caught the feeder with several minutes to spare. It being Sunday, we could stand comfortably during the two-hour ride without being crushed between other passengers.

"Tell me about yourself," said Jim. "What are you doing?"

"I'm a research engineer in the micropower elec-

tronics lab at the university, Jim. Used to be you had to have a PhD, or at least a master's degree, to do research there, but credentials aren't so important anymore. Productivity is all anybody cares about. It's only a three-mile walk from my home to the lab, and I enjoy it, except when it's cold or raining, or both. What about you? You seem to be a traveling man."

"Yeah, I'm an energy efficiency inspector for the government. It keeps me on the move constantly. When Janet died, I sold the house and have been practically living out of a suitcase ever since. That's one reason I dropped out of ham radio so long ago. I guess you dropped out, too, when the rationing got tight on home electricity, didn't you? There isn't any ham radio anymore, is there?"

"Oh, sure, Jim! Amateur radio is still legal, but you have to furnish your own power from homemade batteries or generators turned by hand crank or foot pedals, or anything else you can think of, as long as you don't use the public utilities. There are wind-driven generators, if you can find them and are able to pay for them. The farmers with creeks on their land have it made; they dam up the creeks and use water wheels to turn their generators. They have all kinds of power, compared to the rest of us. Trouble is, the generators are all wearing out, and parts are very hard to find. Most people use old alternators from automobiles, and they aren't making those anymore. The reason amateur radio is still around is that hams innovate and contribute to energy technology. But you probably already know about all this, being a government energy inspector."

"Far from it, Frank. I'm only concerned with the big stuff. Public utilities, what industry there is, that sort of thing. I didn't know the FCC still existed! My job keeps me awfully busy. Most all of my time in hotels and riding trains is taken up with writing my reports. Don't guess I've read a newspaper or listened to a radio in months—maybe years. My ears aren't what they used to be, and those crystal sets they have in some of the hotels don't put enough power into the headphones for me to follow what's being said."

"That's too bad, Jim," I said. "We get a lot of enjoyment from our crystal set. The lack of selectivity is no problem because there aren't many radio stations. If you're lucky, you live within 25 miles of a 250-Watt station. That's the legal power limit for AM broadcasters. They only broadcast at night. News and educational material mostly, but, on Saturday nights, our station plays recordings of the old radio shows from the 1930's and 1940's—drama, comedy, cops and robbers. Young people don't understand much of it, because life was so much different then. I use a Schottky diode in our crystal set. Salvaged it from an old balanced mixer."

"Are you still active in ham radio?" asked Jim.

"I still tinker around with radio at home when I have a little free time. It's almost like when I was a kid in 1940, building galena crystal sets; didn't solder wires together—just scraped the enamel off with a knife and twisted the wires together. Now I twist the wires together because it's aluminum wire. Copper wire and solder just aren't available for ham use. We have a little of each at the lab, but we don't use it very often. There isn't a soldered connection in any of my ham equipment. And aluminum wire isn't what you'd call plentiful; anytime you get hold of a piece of stranded wire, you unwind it to make seven pieces of solid wire. Very few electronic parts are manufactured anymore, and nearly all the components we use are salvaged from old equipment."

"I had no idea things were that bad," said Jim.

"You'd never guess what I'm using to power my rig," I said. Jim's face broke into a curious grin, expecting to hear some wild tale. I smiled and continued. "I've got the back end of an old bicycle frame mounted upside down under the operating table so I can work the pedals with my feet. I've never been able to get an alternator or generator, but I happened to acquire twenty of those little permanent magnet motors they used to make for battery-operated toys. They work as generators when you rotate their shafts. I've got them spaced around the bicycle wheel so the wheel drives them all at the same time; they put out a dc voltage, and I've just connnected them in series. The generator shafts turn at about 1000 rpm with a comfortable pedal speed, and each one puts out about 0.7 volts."

Jim began to chuckle. "That sounds like a real contraption," he said. "How much power do you get out of it?"

"Oh, I get more than enough for my transmitter," I replied. "I only run about one Watt output on forty meters."

"One Watt!" exclaimed Jim. "I used to read about the QRP boys back in the old days, but I never figured many of them did much good. Gee, when I sold my rig, I had a kilowatt and a beam on a sixty-foot tower." We looked at each other silently for a moment when he said that. It hit us how everything had deteriorated as the Earth's oil and gas reserves had been used up. We didn't talk much during the rest of the train ride. Just stared out the window into the darkness of the night, each of us absorbed in our own thoughts.

"This is where we get off, Jim," I said, moving to the door as the train slowed. It was a five-mile walk to my house *from* the train, and, although it was cold, the wind had calmed. We made small talk on the way. Martha met us at the door, and the smell of fish cooking on the space heater brightened our spirits. After dinner, I took Jim out to the garage to show him my rig.

"Since we don't have cars anymore, Jim, garages make great workshops and ham shacks. All kinds of room." I set the candle on the operating table, pulled up an extra chair for Jim, and then sat down and started pumping the bicycle pedals. When the flashlight bulbs strung above the table brightened, I blew out the candle.

"I'll be darned," said Jim. "Electric lights and everything!"

"Nothing but the finest!" I said with a smile. "My generators furnish lighting as well as power for the ham gear!" I pointed to the circuit mounted on a small piece of wooden board. "That's my transmitter, Jim—two FETs. Just a crystal oscillator and amplifier operated CW. You never hear any phone signals on the bands. This rig draws about 120 milliamps at 14 volts and has about one Watt output. Everybody uses crystal control. No reason not to. There aren't so many of us active anymore. The antenna is a 40 meter half-wave dipole

about 20 meters above the ground, strung between two trees. It's made from short pieces of aluminum wire twisted together, end-to-end. Sometimes the wind blows it down. My transmission line to the antenna is open-wire twinlead with the two wires spaced about five centimeters apart. It's made from short pieces of aluminum wire, too. The spacers are made from short pieces of scrap plastic rods, broken knitting needles, swizzle sticks, you name it. I got a bad blister on my thumb from turning the crank on my hand drill when I drilled all those holes in the ends of the spacers."

"I'm really amazed," Jim said slowly. "Does all this haywire rig really work?"

"Sure does!" I replied proudly. "That's the receiver there on the right. It's a direct-conversion type—not very efficient. It draws about five milliamps at 14 volts. Last month, I worked two stations, one in St. Louis and one in Phoenix. We don't exchange QSL cards anymore. Postage costs too much. The guy in St. Louis is an electrochemist; he was testing a new kind of organic battery with his three-Watt rig. Put in a good signal here. The one in Phoenix was working with a half-Watt outfit powered by batteries he kept charged with solar cells. No telling where he got those solar cells; they're probably harder to find than any part you can think of." I could see Jim was listening very intently, so I said, "Go ahead and put on the headphones. Tune around the band." He adjusted the phones to his ears slowly and carefully, then leaned forward and turned the receiver's tuning dial across the band. After a moment, he stopped and listened. He must have picked up a station. In a few minutes, he smiled and removed the headphones.

"Somebody in Kansas City working a guy in Atlanta, but I couldn't hear the Atlanta station. He was only running one Watt, but he had a fairly decent signal. Not strong, but not weak, either. He sent code awfully slow. Must not have been over five words per minute."

"We all send slow, Jim. Remember back in the days of moonbounce how the best technique was slow CW? Well, that goes for any weak signal conditions. It's easier to copy weak signals when code speed is slow, and, if the signal fades temporarily, you don't miss very much."

Jim put the phones down on the table. "Gee, I sure envy you, Frank. You must have a lot of fun with this. In a way, it must be like ham radio was back in the early days before our time."

"I'm sure it is, Jim. Sometimes I get to philosophizing and think it's some sort of a cycle. Right now we're in a trough, but there may be another crest in the future sometime."

"Maybe so, Frank. Maybe not. From what I've seen tonight, though, I don't think ham radio will ever die out completely. Not as long as there is civilization."

I felt good when he said that. I lit the candle, took my feet off the bicycle pedals and watched the flashlight bulbs grow dim and go out. We got up and went back into the house. Martha was brewing that coffee we had saved, and it smelled great! ■

Dana Lasher
8613 Caswell Ct.
Raleigh NC 27612

The Kalculating KIM-1

—calculator versatility for any KIM

The programmable calculator system (PCS) provides the hardware and software to convert your basic KIM-1 into a complete programmable scientific calculator. PCS features all basic arithmetic functions, trig functions, logarithms, exponentiation, factorials, powers and roots, two level parentheses, floating decimal, scientific notation with 8-digit mantissa and two-digit exponent, and six memory registers for storing variables. In addition, PCS allows you to enter, save, and execute programs consisting of lines of calculator language code. The calculator language supports all calculator functions plus branching capability.

Software Operation

The programmable calculator system consists of a software interpreter that reads input from the KIM-1 key pad. Input can consist of immediately processed requests, such as requests to perform arithmetic calculations (e.g., 1 + 5 =), requests to display the value of a variable (e.g., A =), or program related requests, such as a request to enter a new program or a request to execute a stored program.

Two special techniques are needed to be able to support these functions with the standard KIM-1 key pad and display. First, since you will need to enter 50 unique keystrokes, and the KIM-1 keypad only has 23 keys, a technique of shifting, like upper and lower case on a typewriter, is used. Keys 0-9 alone represent the digits 0-9. Keys A-F alone represent variables named A-F. Keys AD, DA, PC, and GO represent special functions to be described later. The + key is used as a shift key. Entering the shift key and then entering 0-9 or A-F produces one set of special characters (e.g., shift, 3 is the multiply symbol). Entering the shift key twice and then 0-9 or A-F produces another set of special characters (e.g., shift, shift, 5 is the square root operation). The complete specification for the keys supported is shown in Figs. 2 and 3.

The second special technique allows calculated results and variables, which can be up to 13 digits long, to be displayed on the KIM-1 6-digit output display. This is done by showing the digits like a moving billboard, scanning across the KIM display right to left. After the scan is complete, the last six digits remain lit in the display. A mechanism for repeating the scan is provided if you wish to view the variable again. The speed of the scan can also be varied to suit your needs.

Program Description

The software system consists of the following routines:

INITIALIZATION — readies the calculator for input.
INTERPRETER — displays the output buffer and then waits for a line of input to be read. It then examines the line and exits to the proper command handler.
READLINE — reads one line from the key pad.
READCHAR — reads one character from the key pad. It converts the character tc the correct format foı internal processing.
CALCDRIVER — drives thı calculator chip with one linı of calculator language codı and then reads the results o the execution of the line.
LINEHANDLER — takes line of calculator languag code and prepares it fo CALCDRIVER (i.e., replace variables with their actuı value). After the line has bee executed, LINEHANDLEI translates the result so it ca be displayed or stored as variable.
EDITOR — reads lines (calculator language code ar stores them as a program.
GOPROG — takes a storı program and sends each lir

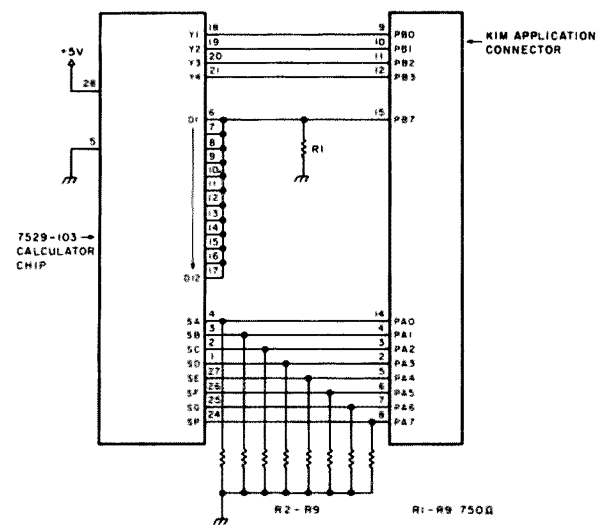

Fig. 1. Interface circuitry.

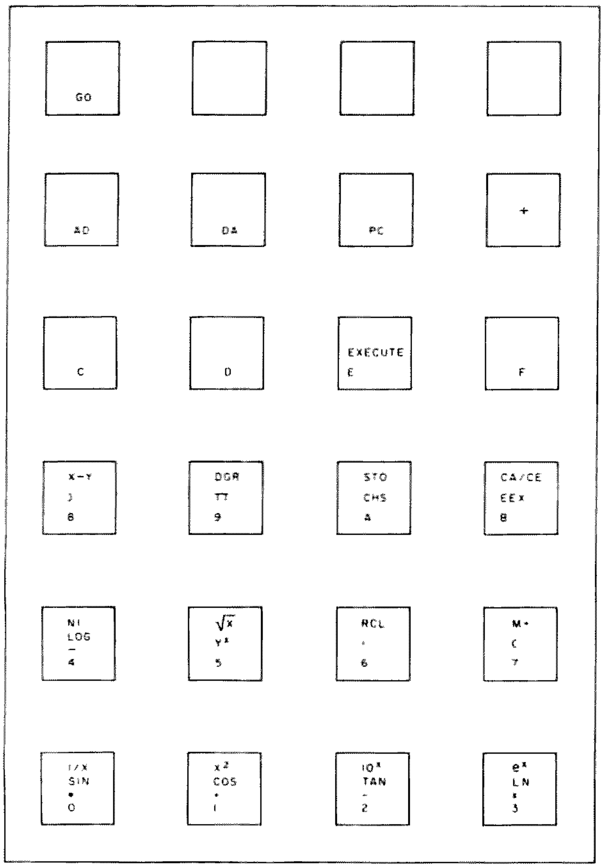

Fig. 2. KIM key pad with PCS functions.

Key	No shifts	One shift	Two shifts	Three shifts
0	0	•	SIN	1/X
1	1	+	COS	X2
2	2	-	TAN	10X
3	3	x	LN	EX
4	4	÷	LOG	N !
5	5	YX	$\sqrt{X}$	
6	6	=	RCL	
7	7	(	M+	
8	8	)	X-Y	
9	9	π	DGR	
A	A	CHS	STO	
B	B	EEX	CA/CE	
C	C			
D	D			
E	E	EXECUTE		
F	F			
AD	CHAR DELETE			
DA	LINE DELETE			
+	SHIFT			
GO	GO			
PC	PROGRAM CREATE			

Fig. 3. Keys with corresponding characters and functions. Note: X2 is X squared, 10X is 10 raised to the X power, EX is E raised to the X power, LN is natural log of X, LOG is log base 10 of X, YX is Y raised to the power X, X-Y is exchange X and Y, and DGR converts back and forth from radians to degrees.

to the LINEHANDLER for execution. After each line, it checks and processes any branch requests.

WRITE/OUTPUT – displays a result or variable.

Hardware Operation

The actual arithmetic operations are performed by an MOS Technology calculator chip 7529-103. The schematic for interfacing this chip to the KIM is shown in Fig. 1. The hardware uses one unusual technique. The 7529-103 is designed to work with a negative 7.5 voltage supply. The chip is connected so that its operating point is shifted to use a positive voltage supply by reversing the ground and Vdd connections. To make the chip TTL compatible, the positive voltage level is lowered to 5 volts. This is outside the range recommended by MOS Technology (-6 V to -9.5 V), but most chips should work correctly.

Keystrokes are sent by KIM to the chip over lines Y1-Y4. Results are sent back to KIM over lines SA-SP. The chip synchronizes all its operations by using the digit strobes (D1-D12). The digit strobes are tied together, and KIM uses these as synchronizing pulses to know the proper time to enter data and read the results.

Why did I use a calculator chip to perform the arithmetic operations instead of doing everything in software? I can best explain why by listing the pros and cons of doing it this way and then by indicating which reasons I weighed most heavily in my decision.

Pros for using a calculator chip:

1. All the complicated routines for high-precision arithmetic and scientific functions are coded and debugged in the calculator chip.
2. Those routines don't take up KIM memory. Therefore, the entire system can fit in the KIM 1K of memory.
3. The routines are in ROM and don't have to be loaded.
4. I could get the chip for less than $10.
5. The design for the interface of the chip to KIM already existed (see acknowledgements).

Cons for using a calculator chip:

1. It takes longer to perform the arithmetic operations due to the handshaking between KIM and the chip.
2. It uses up I/O lines.

The entire system . . . at home in the den.

```
ADDR VALUE IN HEX; XX MEANS DON'T CARE
0000 4C1001202000F0F8 A002B1EDC9E2D003
0010 4CCA03C9F4D0034C A00320B2024C0000
0020 EAEAEAA90085D9A0 0284F7205300A4F7
0030 A5DFC9F3D007A001 A5D991ED60C9F0D0
0040 0788C6D910E3D0DB C9F1F0D791EDE6D9
0050 C810D6A90085E020 8C1E20AF17D0F820
0060 AF17F0FB20AF17F0 F6206A1FC91510E7
0070 85E1A280A00596E7 8810FBC910900809
0080 F0C9F2F024D01EA6 E0D004C90A1016C9
0090 00D002A90C0A0A0A 0A85F6A901CA3003
00A0 0A10FA05F685DF50 02E6E0A6E0A0EDCA
00B0 300494E710F9C9F2 F09DA4E1C010B005
00C0 B9E71FD003B9CA00 85EC600000000092
00D0 9FACB9C6D3000000 0000B9B880BDF300
00E0 0000000000010780 808080808000001XX
00F0 XXXXXXXXXXXXXXXX XXXXXXXXXXXXXXXX
0100 808080808 0B9F7B8 B980800000000000
0110 A9EA8DAE028DAF02 200002A9108DAE02
0120 A9FB8DAF02A9208D 0000A9808D0100A9
0130 178D02004C000000 0000000000000000
0140 0000000000000000 0000000000000000
0150 0000000000000000 0000000000000000
0160 80808080B4B4FF00 0000000000000000
0170 0000000000000000 0000000000000000
0180 0000000000000000 0000000000000000
0190 0000808080808080 808080C180808080
01A0 8080808080808080 C180808080808080
01B0 80808080 80C18080 8080808080808080
01C0 8080C18080808080 80808080808080C1
01D0 8080808080808080 80808080C1808080
01E0 A9C19D0001E8A90A 4CD4170000000000
01F0 0000000000000000 0000000000000000
0200 A90F8D0317A200BD 640186D6202302A6
0210 D6A5D5C9FFD0034C 8C02E8E0034C0702
0220 20051C85D5A0042C 021730FBA214CAD0
0230 FD2C021730F1A5D5 C9FFF0344A4A4A4A
0240 AACAF00C2C021710 FB2C021730FB10F1
0250 A5D5290FAA2C0217 10FB8E0217A2002C
0260 021730FB8E021788 D0BD20A102EAEA60
0270 A00BA2142C021710 FBCAD0FDAD001799
0280 86018830EA2C0217 30FB10E6A001A20A
0290 BD8701997A01C8CA 10F6AD86018D7A01
02A0 60A94C8D05172C07 1710FB2C001710FB
02B0 6000A001B1ED85D9 A9B48D64018D6501
02C0 A266C8B1EDC6D9F0 23C910B01984E1A8
02D0 B9C500A820E001EA EAB902010AF00320
02E0 C917A4E1D0DC9D00 01E8D0D6C962D004
02F0 9D0001E885DFA9FF 9D000120000 2A271
0300 A4DFC010B002B6C5 8E1E038E3003A200
0310 A000B97A0109809D 64012075039D7101
0320 B97A012980F00BA9 08E89D6401A9C29D
0330 7101E8C8C00CD0DA A000AD70010D6F01
0340 C980D0038C6E018C 7101A064A980D900
0350 01D003C8D0F88888 888884E4A5DF290E
0360 0D8601F003098060 A5DFC9C1D002A900
0370 4A4A4A4A60C980F0 1A86E0A20BDDE71F
0380 F00CCA10F8A20AC9 C0F003A209EABD94
0390 03A6E060C1112131 415161718191A261
03A0 A90085ED85D82020 00F01518A001A5ED
03B0 85D771ED6902A000 91ED85ED86D8D0E6
03C0 A6D7A9009D00014C 0300A5D8F02FA4ED
03D0 84D7A90085ED20AF 1720B2021008A000
03E0 B1EDF015D0EEA8A2 00BD000188F007C9
03F0 00F006AAD0F38A10 DBA5D785ED4C0000
1780 A005A205B1E4D001 6095E788CA10F5D8
1790 189865E685E3A20A 86E2A9528D071720
17A0 AF172C071710F8C6 E2D0EFA4E3D0D3A9
17B0 7F8D4117A000A209 B9E70084FC204E1F
17C0 C8C00690F3203D1F 60A9B29D0001E8A9
17D0 03EAEAEA85DFB900 01C980F0049D0001
17E0 E8C8C6DFD0F060
```

Fig. 4. Hex program listings.

3. Someone has to develop the hardware and software interface to drive the chip.

The factors that led me to use the calculator chip were that I only had 1K of RAM on my KIM, I did not want to code and debug arithmetic routines, the interface for this chip existed, and I was not concerned about longer execution times.

Calculator Language

The calculator language is built to drive the 7529-103 chip. The complete specifications for the calculator chip and its entry operations come with the chip ("MOS Specification for Single Chip 40 Key Scientific Calculator Array"), so I will not exhaustively repeat them here. The document is worth reading when you implement the system.

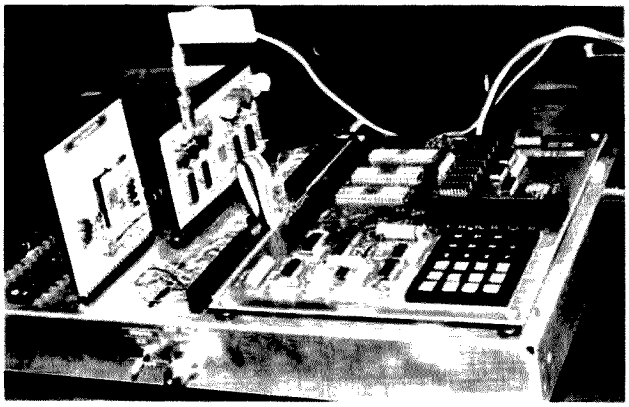

KIM mounted on aluminum chassis box with Lancaster TVT6-L and calculator interface.

Calculator Entry Operations

Range: Inputs and outputs can be positive or negative numbers between 1 x 10E -99 and 9.9999999 x 10E +99 (read the 10E as "ten raised to the power"). The mantissa can be up to 8 digits plus a decimal point with a maximum of 7 digits to the right of the decimal point. Either after or during the entry of the mantissa, the algebraic sign can be changed entering the change sign key (CHS). An exponent is entered by pressing the enter exponent key (EEX) followed by one or two digits. Either prior to or during the entry of these digits, the sign of the exponent can be changed by pressing the CHS key (e.g., 1.7 = 1.7, 1.7 CHS = -1.7, 1.7 EEX 12 = 1.7 x 10E +12, 1.7 EEX CHS 4 = 1.7 x 10E -04). Results that exceed 8-digit accuracy will automatically be converted to scientific notation.

Mathematical Operations: The operators (+, -, x, ÷, YX) all require two variables as input (e.g., 2 + 3 = 5). Read YX as Y raised to the X power (e.g., 2 YX 3 = 8.). The operators (SIN, COS, TAN, EX, 10X, N!, LOG, LN, X2, 1/X, $\sqrt{x}$) all require one variable as input and are executed immediately upon entry upon the current

operand. Read EX as E raised to the X power, 10X as 10 raised to the X power, and X2 as X squared (e.g., 5 1/X = 0.2, 7 X2 = 49).

Operands may be complex expressions contained within parentheses (e.g., (1 + 5) x (2 + 7) = 54).

You can reverse the order of factors in a two-variable operation by hitting the exchange key (X-Y). For example, 2 ÷ 3 = .667, but 2 ÷ 3 X-Y = 1.5.

The clear key (CA/CE) clears all data registers except the memory register. The calculator system automatically performs this clear for you before each line entered.

Pressing the store key (STO) stores the last result in the calculator's memory. Recall (RCL) recalls the calculator's memory. Memory add (M+) adds the current data to the memory register. Later you will see that this memory register can be used for branching control for calculator language programs.

In summary, you enter statements just as if you were using an algebraic calculator, entering data left to right as it would appear on a sheet of paper.

Formula: $CI = A[(1 + B)^C - 1]$

PC GO	enter program create mode
(1 + B) YX C = D GO	enter line 1
A x (D - 1) = GO	enter line 2
GO	exit PC mode (Note that you really did enter two successive GOs).
	(Note that D is used as an intermediate variable.)
1000 = A GO	set A = 1000 = principle
.06 = B GO	set B = 6 percent interest per year
1 = C GO	set C = 1 year (interest compounded yearly)
Shift /E GO	execute program

Fig. 5.

Special Keys

0-9: Enter digits 0-9.

A-F: Enter variable names. There are six variables each named by a unique letter, A-F.

GO: The GO key is equivalent to the carriage-return key on a typewriter. It signals the system that the line is completely entered and it is time to process the line. All lines must end with the depression of the GO key (e.g., 2 + 3 = GO would result in the display of the answer 5).

After the GO key is pressed, the system will display the result. If there is no result to be displayed, as, for example, while you are entering lines of a program, the system will display the letter G. Pressing GO after a result has just been displayed will redisplay the last output message. This is useful if the last output was a result with more than 6 digits, and you wish to see the whole output again scanned across the display.

AD: The AD key will delete the last character entered. It is a backspace-and-erase character. After AD is pressed, the system will display a C (for character deleted). For example, 5 x 3 = GO results in the answer 15; 5 x 3 AD 5 = GO results in the answer 25.

DA: The DA key deletes all characters in the current line (delete all). It resets you back to the start of the current line (e.g., 5 + 2 DA 6 + 3 = GO results in the answer 9). After pressing the DA key, the system will display an L for line deleted.

+ : The + key is the shift key. Each successive pressing of the shift key will display another S in the display, so you can keep track of the number of shifts entered. For example, to enter 3 ÷ 5 = GO, you would enter 3 +4 5 +6 GO, where +4 represents divide and +6 represents the equal sign.

PC: The PC (program create) key deletes the previously stored program and allows you to enter lines that will represent a program. Note that PC is a single character line and, like all other lines, is terminated by the GO key.

Entering Lines for Immediate Execution

All basic PCS lines end with an equal sign (=) and then GO (e.g., 1 + 5 = GO results in the answer 6; remember that the plus sign was entered as a shift /1).

PCS also supports the saving of results in any of the six variables, named A, B, C, D, E, and F. To save a result in a variable, end the line with an equal sign, followed by the variable name, followed by GO. Try the following: 1 = A GO, 2 = B GO, A + B = GO. The system should respond with the answer 3. Remember that the equal sign is entered as shift /6 and the plus as shift /1. Also, note that, as you enter each statement, the system will give you the intermediate result. To display the value of a variable, enter the variable name, an equal sign, and GO (e.g., B = GO will display 2). Try another example with A and B set from above. (A + B) YX (B x 3) = GO. This calculates 3 raised to the 6th power, and the answer should be 729.

Program Creation, Execution, and Branching

PCS allows you to enter a program consisting of one or more lines of calculator language code. To create a program, enter PC (program create) and GO. The system will display a P after you enter PC and G after you enter GO. Now enter lines just as if you were entering them for immediate execution. Remember that each line ends with a GO. To end program creation, enter two GOs in succession. To execute the program, enter shift /E GO.

For example, to calculate compound interest where: A = principle, B = interest per compounding period, and C = number of compounding periods, enter the program in Fig. 5.

The system will respond with 60.0 as the interest for 1 year. Now try it for 10 years by entering 10 = C GO and then shift /E GO. The answer will be 790.8477.

Now for branching: When you write lines of code on your worksheet, number each line of the program starting with 1. These assumed line

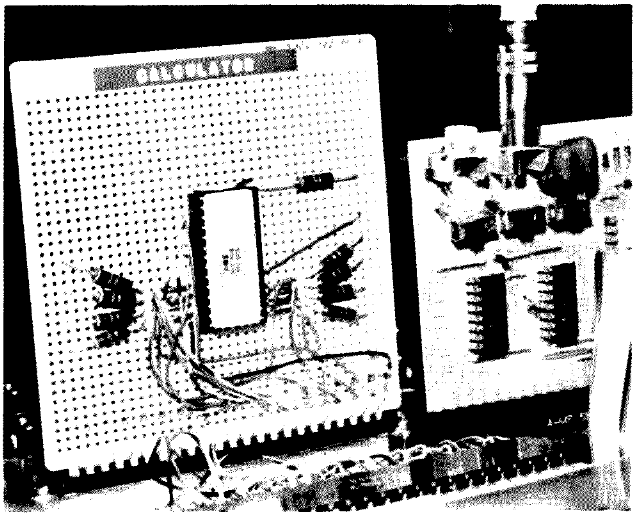

Close-up of calculator interface board.

```
1. Count to 4
A = loop counter
B = sum

  Assumed
line numbers

        PC     GO                                  Enter program create mode

P   1.  3 = A   GO                                 Line 1  Set loop counter to 3
R   2.  0 = B   GO                                 Line 2  Set sum to zero
O   3.  B + 1 = B   GO ┐    Loop if A              Line 3  Add 1 to B
G   4.  A - 1 = A   GO │    is positive            Line 4  Reduce A by 1
R   5.  A = 3  GO ═════╡    Fall through           Line 5  If A is positive, go to 3
A   6.  B =    GO <────┘    if A negative          Line 6  Display B
M
        GO                                         Exit from program create mode
        Shift /E     GO                            Execute program; system will display
                                                   answer    B = 4.
        We can simplify the branch mechanism by using the calculator's memory as the
        loop counter. B is still the sum.

        PC     GO                                  Enter program create mode

P   1.  3 = STO =   GO                             Line 1  Set loop counter = 3
R   2.  0 = B   GO                                 Line 2  Set sum = 0
O   3.  B + 1 = B   GO                             Line 3  Add 1 to B
G   4.  RCL - 1 = STO = 3  GO                      Line 4  Recall memory, subtract 1, save
R                                                  new value and branch to 3 if positive
A
M       GO                                         Exit program create mode
        Shift /E     GO                            Execute program; system will display a 4
        B = GO                                     Display B (equal to 4)

2. Calculete loan payments
A = Amount borrowed
B = Yearly interest
C = Months to repay
                        A(B/12)
Formula: payment = ---------------------
                   1 - [1 + (B/12)] -C

        PC     GO                                  Enter program create mode

P   1.  B ÷ 12 = D   GO                            Line 1
R   2.  A x D = E   GO                             Line 2
O   3.  (D + 1)   YX C CHS = F        GO           Line 3
G   4.  E ÷ (1 - F) =    GO                        Line 4
R
A       GO                                         Exit
M
        4000 = A    GO                             Borrowed S4000
        .095 = B    GO                             9.5 percent interest
        30 = C      GO                             30 months
        Shift /E   GO                              Execute program, answer will be
                                                   150.31686 (which is your monthly payment)
                                                   (Note: D, E, F are used as intermediate variables)

3. Calculate value of investing money periodically
A = Amount invested at the start of each period (period could be a week, month, or year)
B = Interest rate per period
C = Number of periods

        PC     GO                                  Enter program create mode

P   1.  C - 1 = STO =   GO                         Line 1  Set loop counter
R   2.  0 = D   GO                                 Line 2  Set sum
O   3.  D + A x (1 + B) = D   GO                   Line 3  D is value of investment
G   4.  RCL - 1 = STO = 3   GO                     Line 4  Go through "C" periods
R   5.  D =     GO                                 Line 5  Display D
A
M       GO                                         Exit
        1000 = A    GO                             Invest $1000 at the start of each year
        .06 = B   GO                               At 6 percent interest per year, compounded
                                                   annually
        1 = C   GO                                 For one year
        Shift /E   GO                              Execute, answer is 1060
        5 = C   GO                                 Now try it for 5 years
        Shift /E   GO                              Execute, answer is 5675.28
```

Fig. 6.

numbers will be used as targets for branch instructions. Branching works as follows: 1) enter as a program line any acceptable calculator expression; 2) terminate the expression with an equal sign followed by a line number (e.g., A = 4); 3) when that line is executed, the result is tested, and, if it is positive (zero or greater), the branch will occur, but, if the result is negative, the branch will not occur and the next sequential line will be executed. In Fig. 5, if A is equal to or greater than zero, a branch to line 4 will occur. If A is less than zero, no branch will occur. Branching to line zero or any nonexistent line will terminate program execution. After the last line of a program is executed, program execution will also be terminated. See Fig. 6 for examples.

Summary of Language Rules

A line consists of:

EXPRESSION = RESULT GO.

EXPRESSION is any valid calculator expression with or without variable references.

= is an equal sign (shift /6).

RESULT is blank – display the result of the expression.

A-F – Set the variables A-F equal to the result of the expression.

Line number – If the result of the expression is positive, branch to the line specified. If the result of the expression is negative, do not branch. Valid line numbers are 1-9. A branch to zero or a nonexistent line terminates the program.

Notes

1. The number of lines in a program is limited by the work space available, which is 93 bytes. Each line requires one byte per character (do not count shifts, since they are not stored) and two bytes for overhead (e.g., A x 3.1 = requires 8 bytes). After a program is stored, any space left over is used for lines that are entered for immediate execution. Exceeding the available workspace will yield unpredictable results.

2. Each line that is executed is first expanded by adding two clear characters and a termination character and by substituting the actual value of variables for their symbolic names A-F. The space to hold the expanded line is 46 bytes, so any one expanded line cannot exceed this value. Since variables can get long (e.g., -1.2345678 10E -95), be careful (e.g., if A is 123.456, the expand line for A + 3.1 = requires 16 bytes).

3. If an F scans across the display, you have overflowed the calculator's range. Try the following: EEX99 x 100 =, and EEX CHS 99 x .001 =.

4. Expect each line to require about 1 second to execute. So, if you have a program that does a lot of looping, it will run for a while. The display will flash for each line executed to let you know the system is still running.

5. Try entering the numbers 6 and 9 to see what they look like, since the calculator does not use the exact KIM seven-segment display formats for these digits.

6. The chip, MOS 7529-103, with specifications is available from Johnson Computer, PO Box 523, Medina OH 44256.

7. To run the calculator: 1) power on KIM, 2) hit reset, 3) set the interrupt vectors 17FA = 00, 17FB = 1C, 17FC = 00, 17FD = 1C, 17FE = 00, and 17FF = 1C, 4) load the program, and 5) start execution at location zero.

8. If you lose control of an executing program, the best way to regain control is to hit stop, hit reset to reset the stack pointer, store zero in location 0171 to limit the display scan, and restart the program at location zero.

9. In scientific notation, the exponent will be displayed as the last two characters. It will be separated from the mantissa by a blank if the exponent is positive and by a minus sign if the exponent is negative.

10. To vary the speed of the display scan, you can modify location 1797 which is OA. If you make it less, the display will scan faster; if you make it larger, the display will scan slower.

Acknowledgements

The circuit for interfacing the calculator chip to KIM and the CALCDRIVER routine were developed by Eric Rehnke and first appeared in the KIM-1 *User Notes*, issue 4.

The program that scans the output across the display was developed by Stan Ockers and appeared in the KIM-1 *User Notes*, issue 1.

I wish to thank Eric for allowing me to incorporate these two routines into the programmable calculator system. ■

Tim Daniel N8RK
7 Peabody Dr.
Oxford OH 45056

A No-Cost Digital Clock

— use your programmable calculator

If you already own or are contemplating purchasing a programmable calculator, you may want to try a novel method of using your calculator as a timepiece.

My SR-56 calculator is a versatile piece of hardware, but I have discovered that, much of the time, I use it for simple functions that could be done just as effectively on a less expensive machine. The ability to enter programs that allow the calculator to automatically solve complex equations makes the SR-56 and other calculators like it special. After trying out some of the programs suggested by the manufacturer, I became interested in writing my own software. One item that particularly intrigued me was the pause function. This does just what the name suggests — leaves a short space in the program. Normally one does not worry about the exact length of the pause, but, just on a whim, I checked mine. It turned out to be about .62 seconds long. To convert this fraction into whole units that made more sense, all I had to do was put three pauses in a row, giving a resulting time of just under three seconds.

Now that the basic time unit was established, it became a simple matter to write an addition program where a new time was displayed every two seconds. By using the t-register (conditional branch), where a number is compared with another number in the memory and a predetermined command is given, it was simple to have the calculator replace a .6 with a 1 at the minute mark and start over with 1.02 and so forth.

Between using the t-register and the pause function, it is possible to write a 12-hour clock program or even a ten-minute countdown program that could be used by hams as an ID reminder or possibly a darkroom timer.

The accompanying program is meant to serve as a starting point. It can probably be reworked for almost any programmable calculator. As a novice programmer, I have made little attempt to hone the program down to minimum size. A variety of approaches can be taken. I have shown only the one I found most easy to grasp.

If you need super accuracy, then time programming may not be for you. But, if you enjoy writing your own calculator programs and would like to show some unique and useful software to your friends, then give it a try. ■

Loc	Code	Key
00	59	*pause
01	59	*pause
02	59	*pause
03	74	–
04	92	.
05	00	0
06	02	2
07	94	=
08	37	X = T
09	01	1
10	04	4
11	22	GTO
12	00	0
13	00	0
14	33	sto
15	00	0
16	15	CLR
17	32	x ≶ t
18	37	X = T
19	03	3
20	05	5
21	74	–
22	01	1
23	94	=
24	32	x ≶ t
25	15	clr
26	34	rcl
27	00	0
28	74	–
29	92	.
30	04	4
31	94	=
32	22	GTO
33	00	0
34	00	0
35	01	1
36	54	÷
37	00	0
38	94	=
39	41	R/S

Fig. 1. Program listing. Register 0 is time.

Steps 00-02	This gives a two-second interval.
Steps 03-07	This subtracts .02 (two seconds) from running total.
Steps 08-13	Running total compared to next lowest minute mark.
Steps 14-20	Running total stored, check made to see if it is 0.
Steps 21-25	T-register decremented to next lowest minute mark.
Steps 26-34	Running total lowered to next minute (.4 subtracted).
Steps 35-39	Flashing display for 00 seconds.

Table 1. Ten-minute ID timer explanation. When reading display figures, those on the left of the decimal point are the minutes, while those on the right are the seconds.

Step	Procedure	Enter	Press	Display
1	Enter program			
2	Reset and clear		RST CLR	0
3	Set t-register	9	x ≶ t	0
4	Enter initial time	9.6		9.6
5	Start clock		R/S	
6	Ten-minute mark has been reached (flashing)			9.99999999999

Fig. 2. User instructions.

The BASICs of L-Network Design

—your micro makes it simple

Al Gerbens K7SBK
1038 E. 6th Place
Mesa AZ 85203

An L-network consisting of a single coil and a single capacitor can be used to match a purely resistive line to any complex impedance. Only three L-networks are required to do the job, as explained by Robert Leo W7LR.[1]

The three configurations are shown in Fig. 1. Each network is designed to provide impedance matching between a pure resistance (R) and a complex impedance Z (R + jX). Each network, however, will only work for specific combinations of R and Z. The job of normalizing the R and Z values, selecting the correct L-network configuration, and then cranking through the calculations for that configuration is a good job for your microcomputer.

Where to Use an L-Network

Let's say you're constructing a vertical antenna for 40 meters. You will probably need a matching network to go between the 50-Ohm purely resistive coaxial feedline and the complex impedance situation found at the feedpoint of your new antenna. You can calculate what this impedance should be but rarely is. Practically, you will have to use a noise bridge—or an R-X impedance bridge, if you can beg, borrow, or steal one—in order to determine the values of the complex impedance.

Program Discussion

Look at the sample run (Fig. 2), and you'll see that both the input and complex impedances are first

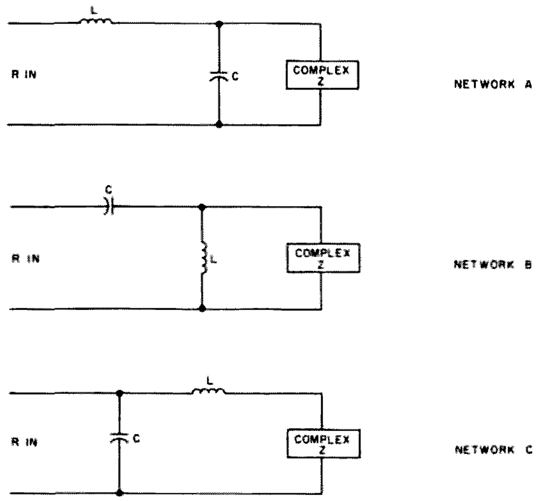

Fig. 1. Three L-network configurations.

```
RUN
        L NETWORK DESIGN
WHAT IS THE INPUT IMPEDANCE TO L
NETWORK? 50
ENTER THE COMPLEX IMPEDANCE OF
THE LOAD;  FIRST THE RESISTIVE
COMPONENT AND THEN THE REACTIVE
COMPONENT.
RESISTIVE (OHMS) 142
REACTIVE (CAPACITIVE= (-); INDUCTI
VE =(+) 90
--------------------------------
NETWORK A USED
CAP. REACTANCE = 84.32Ω
INDUCT. REACTANCE = 86.32 Ω
--------------------------------
FREQ. IN MHZ? 7.2
CAP.= 262.1 PICOFARADS
CAP. REACTANCE = 84.3Ω
INDUCTANCE = 1.9 MICROHENRIES
INDUCT. REACTANCE = 86.3 Ω
INPUT Z= 50
COMPLEX Z = 142 + 90
--------------------------------
WANT TO:
 1-ENTER A NEW FREQ.?
 2-DESIGN A NEW NETWORK?
 3-REVIEW NETWORK A?
 4-STOP?
?1
FREQ. IN MHZ? 14.230
CAP. = 132.6 PICOFARADS
CAP. REACTANCE = 84.3Ω
INDUCT.= .9 MICROHENRIES
INDUCT. REACTANCE = 86.3Ω
INPUT Z = 50
COMPLEX Z = 142 + 90
--------------------------------
WANT TO:
 1-ENTER A NEW FREQ.?
 2-DESIGN A NEW NETWORK?
 3-REVIEW NETWORK A?
 4-STOP?
? 3
      ------
------!INDUCT!-------------------
      ------             !
                         !
IN                    -------  OUT
                      CAPACITY
                      -------
                         !
                         !
---------------------------------
NETWORK A

TO CONTINUE ENTER ANY NUMBER 0
CAP. = 132.6 PICOFARADS
CAP. REACTANCE = 84.3 Ω
INDUCT. = .9  MICROHENRIES
INDUCT. REACTANCE = 86.3Ω
INPUT Z = 50
COMPLEX Z = 142 + 90
--------------------------------
WANT TO
 1-ENTER A NEW FREQ.?
 2-DESIGN A NEW NETWORK?
 3-REVIEW NETWORK A?
 4-STOP?
?4
READY
```

Fig. 2. Sample run.

```
LIST
10  FOR X=1TO16:#"":NEXT
12  #"           L NETWORK DESIGN"
14  #"           - ------- ------"
16  FORX=1TO8:#"":NEXT
18  FORX=1TO1000:NEXT
20  O$=CHR$(152)
22  INPUT"WHAT IS THE INPUT IMPED
    ANCE TO L NETWORK? ",R1
24  #"ENTER THE COMPLEX IMPEDANCE
    OF"
26  #"THE LOAD; FIRST THE RESIST
    IVE"
28  #"COMPONENT AND THEN THE REAC
    TIVE"
30  #"COMPONENT."
32  INPUT"RESISTIVE(OHMS) ",R
34  INPUT"REACTIVE (CAPACITIVE=(-
    );INDUCTIVE=(+))",X
36  A=X/R1:B=R/R1
38  GOSUB134
40  IF A>.5 THEN 42 ELSE 44
42  IF B>1 THEN 56
44  IF A>O THEN 46 ELSE 52
46  IF B<1 THEN 48 ELSE 52
48  D=SQRT((A*A)+((B-.5)*(B-.5)))
50  IFD>.5 THEN 56
52  IF A<.5 THEN 54 ELSE 80
54  IF B>1 THEN 68 ELSE 80
56  GOSUB 92
58  C1=((-2*R1*X)+K)/(2*(R-R1))
60  L1=((R1*X)+(C1*(R-R1)))/R
62  #"NETWORK A USED"
64  N$="A"
66 GOTO 102
68  GOSUB 92
70  L1=(2*R1*X)+K
72  C1=(L1*(R-R1)-(R1*X))/R
74  #"NETWORK B USED"
76  N$="B"
78  GOTO 102
80  L1=(SQRT(R1*R-R*R))-X
82  S2=(L1+X)*(L1+X)
84  C1=(S2+(R*R))/(L1+X+.0000001)
86  #"NETWORK C USED"
88  N$="C"
90  GOTO 102
92  W=4*R1*R1*X*X
94  Y=4*R1*(R-R1)
96  Z=X*X+R*R
98  K=SQRT(W+Y*Z)
100  RETURN
102  #"CAP. REACTANCE= ";INT(C1*100)
     /100;O$
104  #"INDUCT.REACTANCE= ";INT(L1*
     100)/100;O$
106  GOSUB 134
108  INPUT"FREQ. IN MHZ.?",F
110  C=1/(C1*2*3.14159*F)
112  L=L1/(2*3.14159*F)
114  C=INT(C*10000000)/10
116  L=INT(L*10)/10
118  #"CAP.= ";C;" PICOFARADS"
120  #"CAP.REACTANCE= ";INT(C1*10)/10;O$
122  #"INDUCT.= ";L;"MICROHENRIES"
124  #"INDUCT.REACTANCE= ";INT(L1*10)/10;O$
126  #" INPUT Z= ";R1;O$
128  #"COMPLEX Z= ";R;" + ";X
130  GOSUB 134
132  GOTO 164
134  #"-----------------------------"
136  RETURN
138  #"     --------"
140  #"----! INDUCT !----------------"
142  #"     --------       !"
144  #"                    !"
146  #"IN            ---------     OUT"
148  #"                CAPACITY"
150  #"              ---------"
152  #"                    !"
154  #"                    !"
156  #"-----------------------------"
158  #"":#"NETWORK A"
160 INPUT"TO CONTINUE ENTER ANY NUMBER",Z
162  GOTO 118
164  #"WANT TO:"
166  #" 1-ENTER A NEW FREQ.?"
168  #" 2-DESIGN A NEW NETWORK?"
170  #" 3-REVIEW NETWORK ";N$;" ?"
172  #" 4-STOP?"
174  INPUT D
176  IF D=1 THEN 108
178  IF D=2 THEN 22
180  IF D = 4 THEN 244
182  FOR X=1 TO 8:#"":NEXT
184  IF N$="A" THEN 138
186  IF N$="B" THEN 190
188  IF N$="C" THEN 218
190  #"       ! C !"
192  #"       ! A !"
194  #"-------! P !--------------------"
196  #"       !   !          !"
198  #"       !   !          !"
200  #"                   -------"
202  #"                  ! INDUCT !"
204  #"IN                -------"
206  #"                     !"
208  #"                     !"
210  #"-------------------------------"
212  #"NETWORK  B"
214  INPUT"TO CONTINUE ENTER ANY NUMBER",Z
216  GOTO 118
218  #"              --------"
220  #"-------------! INDUCT !-------"
222  #"    !         --------"
224  #"    !"
226  #"  -----"
228  #"IN CAP                    OUT"
230  #"  -----"
232  #"    !"
234  #"    !"
236  #"-----------------------------"
238  #"NETWORK C"
240  #"":INPUT"TO CONTINUE ENTER ANY NUMBER",Z
242  GOTO 118
244  END
```

Fig. 3. Program listing.

entered into the computer, which then selects the correct configuration and calculates the values of capacitive and inductive reactance required to perform the match. Next, inputting the frequency in megahertz yields a summary page which now includes specific values for the capacitor (in picofarads) and coil (in microhenries). Select the review option, and your computer will then print/display a schematic diagram of the correct L-network.

The program is written in D.G.S.S. Maxi-BASIC version 1 and occupies approximately 2.5k of RAM, not counting the interpreter.

Note line 20 in the listing of the program: O$ = CHR$(152). This defines the O$ string as Ohm, a Greek character available on Digital Group systems because of the MCM6571L character generator ROM which is used. If you are using another system, simply rewrite line 20 to read: O$ = "ohms".

The program as listed is written for clarity of content and not minimum memory consumption. By introducing a couple of subroutines and combining lines, you can significantly reduce the memory required, if need be.

Conclusion

This program provides an impedance matching capability which is easy to use and belongs in every ham's bag of tricks.■

References

1. "How to Design L Networks," R. E. Leo W7LR, *Ham Radio Magazine*, Feb., 1974.
2. "Designing Impedance Matching Systems," R. Baird W7CSD, *Ham Radio Magazine*, July, 1973.

Hung Up On Autopatch?

—build this frustration fighter

Eugene Doren WA6THG
6218 Calle Empinada
San Diego CA 92120

After successfully operating the local autopatch facilities here in the San Diego area, I decided to update and add some convenience features to my touchtone™ machine in the form of an autotimer.

Many times, an automatic time-out feature is incorporated in the patch facilities to limit their operation to a specific period of time. Failure to terminate the patch results in an automatic hang-up, regardless of whether or not you are talking. This is as it should be and prevents long-winded talkers from tying up a very popular operating convenience to the ham community. Being sometimes long-winded, I have had the patch facilities hang me up. After going through this a couple times, I decided that what I needed was my own autotimer to warn me of this impending disaster. Thus was born the idea for the autoreminder autopatch autotimer.

My initial idea was to light an LED and hold it lit for each elapsed minute and then go into a flashing mode for the last 30 seconds. However, this required more circuitry than I could cram into the touchtone box. I decided to simplify the whole operation and use only three LEDs. One would remain on for the first 3½ minutes, with the remaining two going into an alternating flash mode 30 seconds before hang-up by the patch facilities. With this operation, a long-winded talker has thirty seconds to say his good-byes before the bomb falls.

Considerable thought and experimentation went into the final design. I wanted a circuit that would begin timing automatically, rather than one that would have to be manually initiated. Because the autopatch facilities begin the countdown period upon access of the dial tone, the problem of beginning my own timer circuit was simplified. Depressing any button on the pad will automatically begin the 3½-minute countdown.

With the Western Electric 35NIA pad, battery voltage is automatically applied through the green and green-white pair when any button is depressed. I decided that this could be utilized, as I was already using this switched voltage to turn on a solid state switch across the push-to-talk line in the transmitter. I simply paralleled the new circuit across it.

To keep things simple, uncomplicated, and, most of all, reliable, all transistors used are the common 2N2222A. This is a silicon NPN device with very conservative ratings which is easy to come by and very rugged. On the surplus market, they can be found for as little as 25¢ each. The 555 timer chips are also available for a very reasonable 50¢ each on the surplus market. So the circuit presented can be constructed for very little outlay of cash. Let's take a look and explore how it works.

About the Circuit

The circuit is a very simple one when broken down into its basic components. Neither layout nor parts are critical, with the exception of the timing capacitor used in the 3½-minute portion of the circuit. This capacitor and the associated 8.2-meg resistor form the two basic components used for the timing period. I found, after much trial and error, that electrolytics in this application are not dependable enough due to their higher internal leakage. I used solid tantalum capacitors, although mylar or polycarbonate units would have been better. In addition, a 35-volt unit was selected, even though it is working in a seven-volt circuit. This keeps its leakage problems to an absolute minimum.

Transistor Q1 is used as a switch to discharge C1 through the 1k resistor, R3. Application of battery voltage through the steering diode to the base saturates the transistor and the "switch" is closed. The result is a beautiful short-duration negative pulse which is coupled through

the .001 capacitor to the trigger pin #2 of the 3½-minute timer. This timer is wired in a monostable mode, and, once its timing period has been initiated by a pulse, it ignores all other pulses until its timing period is completed. Simultaneously, as Q1 is being switched on with the application of battery voltage, the SCR is being gated on with the same voltage across the resistor string, R1, R2. This SCR is used as a switch to complete the dc path to the timer chips, IC1 and IC2. Like the old thyratron tube, the SCR, once gated, begins conduction and stays conducting even after its gate voltage is removed. This happens when you lift your finger from the touchtone button. To turn off the SCR and reset the entire circuit, SW1 is momentarily opened. This action is simple and very foolproof. This SCR is a noncritical item, and almost any SCR will work in this application.

Notice that IC1 and IC2 comprise a "stacked" circuit. When IC1 is initially turned on with the trigger pulse from Q1 and C1, its output at pin #3 goes high to full battery voltage less the drop across the SCR, thus turning on LED1. Because IC2 is stacked across pin #3 and battery voltage, it has no voltage potential across it during this period. Therefore, it cannot flash its warning until the first timing period is completed. As C2 reaches 2/3 Vcc, IC1 turns off, and its output at pin #3 goes low. This action switches on voltage to IC2, and it goes into its alternate flashing action.

For ease in setting precisely the required initial timing period of IC1, a 10k pot is used to apply a variable voltage to the reset pin, #5. More voltage on pin #5 results in a longer timing period, and less

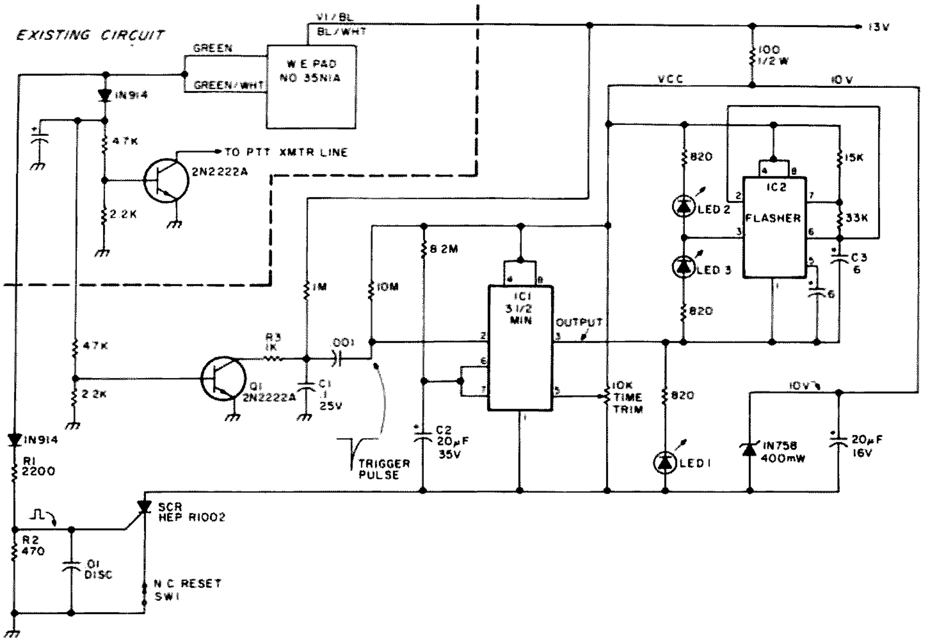

Fig. 1. Autoreminder autopatch autotimer. All resistors are ¼ Watt unless noted. IC1-2—LM-555; LEDs—surplus jumbo reds.

voltage shortens the period. With the values shown, the initial timing period of IC1 can be varied from a short twenty seconds or less to as long as four minutes or more, depending upon the accuracy of the capacitor value, C2. I have found that most capacitors are "long" in value, that is, they exhibit more capacitance than their rated values. Because of this, the necessity of the 10k pot arose. Its operation is simple and dependable, and it allows great flexibility in selecting the desired timing period.

There is nothing critical in any values used with IC2. It is wired in an astable configuration with the timing components chosen to give an alternating flash period of about ½ second for each of the two associated LEDs. This flash rate gives a nice busy look and is a real attention-getter. The ten-volt zener diode was added to assist in elimination of spurious automotive transients which were falsely triggering on the timer chips. In addition, it reduced the applied voltage to C2 and helped to keep the internal leakage problem of this capacitor to a minimum.

Although the spec sheets show only a .01 bypass across pin #5 of the flasher circuit, I found that increasing this value to something around 6 uF eliminated many unexplained actions of the 3½-minute timer chip. Without some good bypassing on this pin, much hash was being generated on the dc line by the flasher circuit.

While browsing through a recent edition of *Popular Science*, I noticed, under the heading "New Products," a telephone timer used to give an indication of when three minutes were up on long-distance calls. Well, friends, if autopatch and touchtone circuits are not your bag, then be my guest and call this circuit "the long-distance telephone timer" (or Fred, if you like). A little imagination could make this same circuit into a dandy 9½-minute station ID timer with 30-second warning by using the values of 8.2 meg and 67 mF in the IC1 circuit. If you should find that IC1 never wants to turn off, put a high impedance voltmeter across C2. You will probably find that this voltage never reaches 2/3 Vcc or around 6½ volts. The problem will most probably boil down to leakage in the timing capacitor, C2. The most troublesome portion of the entire circuit was the development of the necessary trigger pulse used to begin the initial 3½-minute period. Thanks go to Walter Jung and his most helpful booklet, *IC Timer Cookbook*, published by Sams. It's a fascinating bit of reading and recommended to all who want to experiment in the wonderful world of timers.

Try my circuit. It's a fun device. Let your imagination run wild, and perhaps you can come up with another idea for its use. One fellow I know is using the flasher in his car to chase the hamburglars away. Farfetched? Perhaps, but then who is to say what's farfetched if it works? ■

Morrie S. Goldman WA9RAQ
5815 N. Christiana Avenue
Chicago IL 60659

Updating the Wilson 1402

—making a good rig better

The popular Wilson 1402SM hand-held two meter transceiver has gained a reputation as one of the better performing rigs available. However, a common problem seems to appear in 1402s when battery voltage starts dropping much below 12 volts — receive audio distortion.

The problem can be traced to the audio output circuitry design, shown in Fig. 1. As battery power is used and operating voltage falls below an optimum level, the voltage drop across R45 changes. This results in severe crossover distortion and, in effect, a reduction in usable battery life. If R45 is replaced by two silicon diodes in series, the voltage drop between the bases of Q19 and Q20 will remain constant over a very wide voltage range, and the audio distortion vanishes. Unfortunately, this configuration consumes excessive current.

A highly effective compromise circuit is shown in Fig. 2. R45 has been replaced by a low-voltage silicon diode in series with an 82-Ohm, 1/8-Watt resistor. In addition, R43, the collector load of Q19, was replaced with a 120-Ohm resistor. This circuit results in greatly improved audio quality at supply voltages down to 9.5 volts with receiver current drain that is within Wilson specs.

When making the modification, be aware that the exact resistor values marked on your schematic may not match the components in your rig. Tama Denki (manufacturer of the Wilson rig) has apparently changed a few component values without changing the schematic. A small amount of circuit tracing will ensure that you're swapping the right components.

Tama Denki also manufactured the Ken and Pace hand-held transceivers, and it is possible that certain models would demonstrate the same problem. Circuitry changes have been made in the Wilson 1405 which would apparently correct the problem. The audio output circuit of the 1405 is shown in Fig. 3.

The reverse polarity protection on the 1402 is also of note. As shown in Fig. 4, diode D107 is reverse biased when the proper polarity voltage is applied to the circuit. If polarity should be reversed and a negative voltage applied to point C (external power input jack),

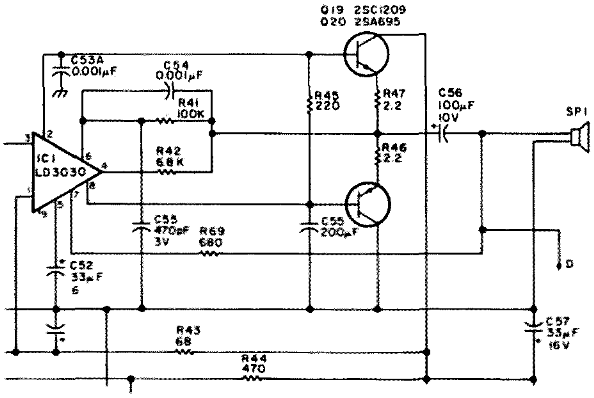

Fig. 1.

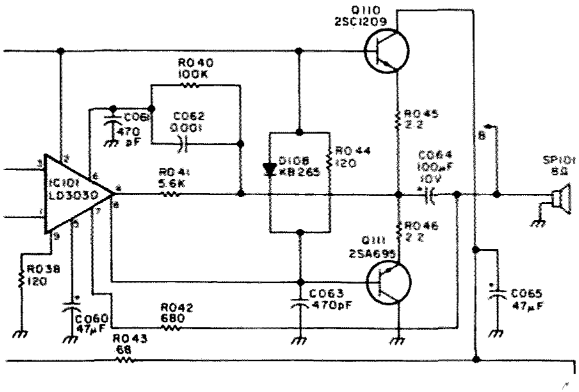

Fig. 3.

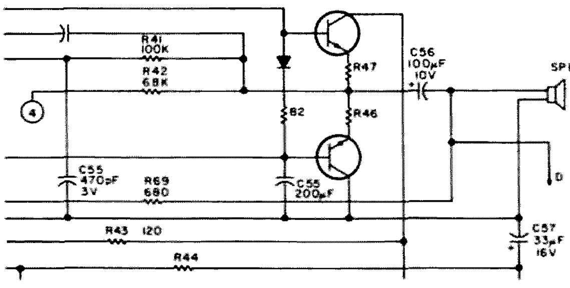

Fig. 2.

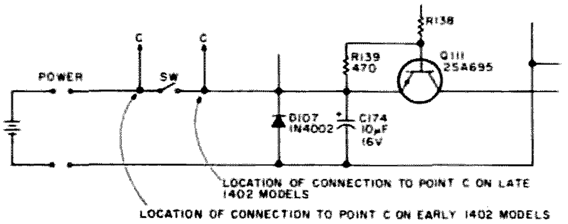

Fig. 4.

the result would not be pleasant! Diode D107 will be forward biased and short circuit the input voltage. D107 will probably open as a result, eliminating all reverse polarity protection!

The solution here is the addition of a fuse in the power input line. About .5 Amps should be about right. Now, if a reverse polarity voltage is encountered, the fuse should blow from the excessive current drawn by D107. Be sure that the fuse is not a slow-blow type. If the fuse continues to blow with a proper polarity supply voltage, the transmit section is probably in need of peaking or the swr is too high. In either case, transmit current drain is excessive.

On early model 1402s, point C was connected to the battery side of the power switch. Although this may seem logical, it allowed unregulated external power to be applied to the internal nicad batteries while the rig was left off. This could easily happen in a mobile installation, damaging the nicads. Later models of the 1402 revealed that point C had been moved to the rig side of the power switch. This solution comes with mixed blessings. With this arrangement, the rig is always on, even when the power switch is on "off." In addition, when the rig is switched "on," the nicads may charge at a higher than desirable current (50 mA is recommended by Gould). A similar arrangement is used on the Wilson 1405, as well.

The simplest and safest way to avoid damaging the nicads is to remove the battery tray when operating mobile. Ideally, the nicads should only be charged on a proper charger. If this procedure is used, point C can be connected to the battery side of the power switch (if not there already), and the rig will truly be off when switched off. ■

W. A. Bohlman K3BPP
101 East St.
Doylestown PA 18901

Quick Check For TT Pads

—test for flea market bargains

All of you, I am sure, have walked around flea markets looking at all of the goodies and have said to yourselves, "That is a reasonable price for that item, if it works." Let's alleviate that indecision in one area – telephones and, mainly, touchtone™ pads.

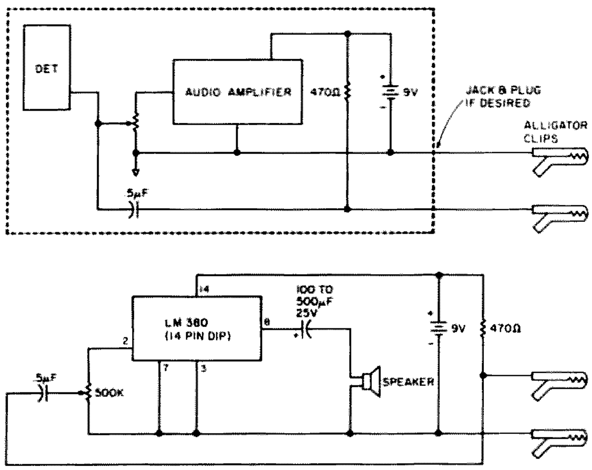

Fig. 1. Alternate solution.

There are two very simple ways of testing a touchtone pad, even when still installed in a telephone. The TT pad requires a dc voltage of 9 to 15 volts to operate. This same line, usually the red of the red-green pair, also contains the audio output of the pad.

All you have to do to test the pad and the mike of the telephone is to hook 9-15 volts dc through a 470 Ω load resistor to the red wire, connect the green to the other side of the supply, and ac couple through a .5 μF capacitor into an audio amplifier.

A portable transistor radio provides both requirements for testing. There is a 9 V dc supply and an audio amplifier. When testing a phone that looks dead, reverse the leads, because sometimes the color code is reversed inside the phone. ■

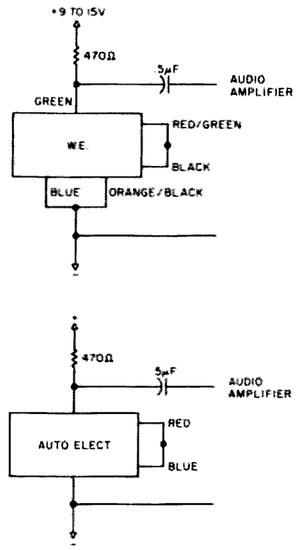

Fig. 2. Typical pad connections.

Social Events

MACKS INN ID
AUG 4-6

The 46th Annual WIMU (Wyoming, Idaho, Montana, Utah) Hamfest will be held on August 4, 5, and 6, 1978, at Macks Inn, Idaho, 25 miles south of West Yellowstone, Montana. Talk-in on 146.34/94 and 3935. Advance registration is $6.00 for adults and $2.00 for children, before July 25th, 1978. Late/regular registration is $7.00 and $2.50. There will be a special prize drawing for preregistration. Please send preregistration to: WIMU Hamfest, 3645 Vaughn Street, Idaho Falls, Idaho 83401; phone (208)-522-9568.

HOUSTON TX
AUG 4-6

On August 4, 5, and 6, 1978, the Houston Echo Society will host the annual Texas VHF-FM Society Summer Convention in the Galleria Plaza Hotel, just off interstate loop 610 at Westheimer Rd. While primarily devoted to the VHF-FM spectrum, attractions will also include microprocessors/microcomputers, the annual Texas champion hidden transmitter hunt, OSCAR communications, and much more, covering all phases of amateur radio. There will be forums conducted by both the ARRL and the FCC. A banquet/dance is planned for Saturday night. The featured speaker will be William A. Tynan W3XO, editor of "The World Above 50 MHz" column in *QST*. Exhibitors will be displaying their wares all day Saturday and Sunday. Several excellent prizes will also be given away. The main prize will be the choice of an HF rig or an allmode VHF rig, with the second prize being the rig which is not given away as the main prize. There will also be a preregistration prize as well as hourly door prizes. More information can be obtained by writing to: FM Society Summer Convention, PO Box 717, Tomball, Texas 77375.

PETOSKEY MI
AUG 5

The 3rd annual Straits Area Radio Club swap and shop will be held on Saturday, August 5, at the Emmet County Fairgrounds, Charlevoix Avenue, Petoskey, Michigan, from 9 am to 3 pm. Talk-in on 146.52. Food services, prizes. Tickets will be $1.50 at the door. Campsites nearby. For information, write to SARC in care of W8IZS, Box 416, Pellston MI 49769.

JACKSONVILLE FL
AUG 5-6

The Jacksonville Hamfest Association is happy to announce the 5th annual Jacksonville hamfest which will be held on August 5 and 6, at the Jacksonville Beach Municipal Auditorium. Activities will include the usual swap tables and exhibitors' displays. Featured programs include a DX presentation by the North Florida DX Assn. on that group's recent DXpedition to Haiti at the invitation of the Haitian government. Shortly after the trip, amateur radio was legalized in Haiti after being outlawed for many years. NFDXA also has two *CQ Magazine* world championships to their credit. A complete seminar on microprocessors will also be featured, along with a "pileup" contest, hidden transmitter hunt, QLF contest, and ARRL meeting. Advanced tickets are now available for $2.50 per person ($3 at the door), with swap tables available for $5 per day. The hamfest site is only one block from the Atlantic Ocean, and those attending can bring their families for a weekend of fun on the beach. Door prizes and hourly drawings will be conducted. All inquiries should be directed to N4UF, Hamfest Chairman, 911 Rio St. Johns Dr., Jacksonville FL 32211. Phone is 744-9501.

UPPER ST. CLAIR TOWNSHIP PA
AUG 6

The 41st annual hamfest of the South Hills Brass Pounders and Modulators will be held on August 6, 1978, from noon to dusk, at St. Clair Beach on Route 19 south, Upper St. Clair Township. There will be a swap and shop, picnic area, and swimming for the family. Mobile check-in on 29.0 MHz and 146.52 simplex. Information and preregistration for $1.50 ($2.00 at the door) are available from Bruce Banister, 5954 Leprechaun Dr., Bethel Park PA 15102. Vendors must register.

LEVELLAND TX
AUG 6

The 13th annual Northwest Texas Emergency Net Picnic and Swapfest will be held Sunday, August 6, in the city park, Levelland TX. Registration begins at 8 am. Lunch at 12:30 pm. Bring your own picnic basket. Swapping all day with tables provided. This is a family event and is jointly sponsored by the Hockley County Amateur Radio Club and the Northwest Texas Emergency Net. Talk-in on 146.28/88. A $2.00 donation will be appreciated but not required.

SALINE MI
AUG 6

The Arrow Repeater will sponsor its 3rd Annual Swap and Shop on Sunday, August 6, 1978, at the Saline MI fairgrounds. Indoor and outdoor exhibits, refreshments, and prizes will be featured. Doors open at 8:00 am. Check-in on 146.37/97 and 146.52. Admission is $1.50 advance; $2.00 at the door. Display space is $.50/ft. For more info, advance tickets, or table reservations, write Arrow, Box 1572, Ann Arbor MI 48106.

DUTZOW MO
AUG 6

The annual Zero-Beaters Amateur Radio Club Hamfest will be held on Sunday, Aug. 6,

Continued on page 164

The Op Amp Beam Heading Indicator

—*modernize your antenna system*

Robert C. Ghormley KØBV
932 S. Comet Ave.
Panama City FL 32401

I saw this linear ohmmeter circuit in the Nov. 11, 1976, issue of *Electronics*, although its theory and operation were treated lightly.[1] My particular application was readout of antenna rotor position using only two wires connected to the rotor potentiometer (one end plus center tap; the other end of the pot was not connected). The pot resistance between the two wires increased linearly from zero resistance to 1000 Ohms, corresponding to 360° of rotation. Any application where a linear readout of a variable resistance is desired may be filled by this circuit.

If you just want to build this circuit, are going to go buy all parts, and don't care how it works, use the following: R1 equal to the maximum value of the unknown resistance you're measuring; R2 = 2.2k; V_Z (zener diode voltage) = 3.3 V/400 milliwatts; a 0-1 mA meter; R3 = 2.7k; R4 = 1000 Ohms; a TO-5 can 741 op amp; and a +12 V power supply. Skip toward the end of this article for calibration procedure and cautions. For those who will use junk-box parts, the following will let you roll your own.

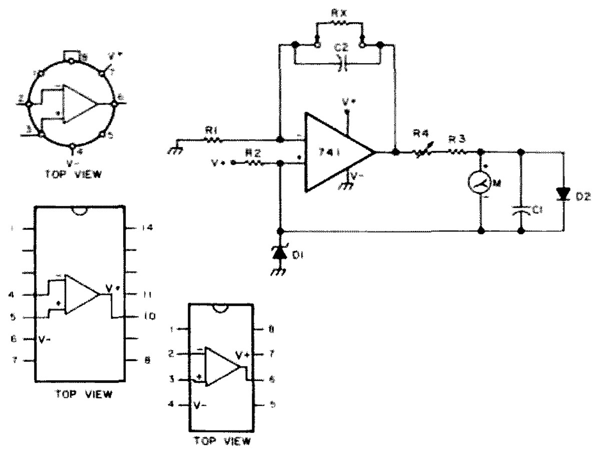

Fig. 1. Linear ohmmeter.

A garden-variety 741-type op amp is connected as in Fig. 1. This circuit uses a single power supply, with the op amp's negative supply terminal grounded. The noninverting (+) input is biased up to a regulated level (any convenient zener up to 5 or 6 volts will function okay). This serves to bias this input and to get the op amp operating "above ground." The inverting (-) input is returned to ground through a resistor equal in value to the maximum unknown resistance to be measured. The unknown resistance, RX, is connected as a feedback resistor.

The output of the amp feeds a current meter (anything from a 50-microamp to a 1-milliamp movement will work just fine) and a series current-limiting resistor. Note that the negative meter terminal is returned to the reference voltage (the noninverting input), not to ground. The series variable resistor allows full-scale calibration.

Pick a meter with four major divisions – 0, 25, 50, 75, 100, or something like that. Relabel these S, W, N, E, S, depending on where you wish the antenna to be indexed. To do a neat-looking job, disassemble the meter and erase the existing legend with an ordinary pencil eraser. This takes a little time, but it works (eraser crumbs inside the meter movement are to be avoided). Relabel the scale with dry transfer letters and reassemble.

Any supply voltage from +10 volts to +30 volts, or even slightly higher, will work. Too much will pop the op amp, but they're cheap. The zener should be biased on by R2 so that it draws 3 or 4 milliamps or more (anything above that is just wasted power). C1 and C2 are bypass capacitors (.001 to 0.1 μF disc ceramics will work fine).

In operation, this circuit functions as an inverting amplifier. The gain is -(RX/R1), which varies from zero to minus one as RX varies from zero to R1. The "signal" voltage which is being amplified is the difference between the left-hand side of R1 (ground) and the noninverting input (the zener potential). If this zener voltage were +5.1 volts, for example, the output of the op amp would vary from 5.1 volts, for RX = 0, to 10.2 volts, for RX = R1. The output of the amp is the reference voltage (zener voltage)

plus the amplified "signal" voltage. If RX is allowed to approach infinity (open terminals), the gain approaches the open-loop op amp gain (a large gain indeed), and the output of the op amp will approach the positive supply voltage, pinning the meter. If this happens often, add the meter protector germanium diode D2 (1N270 or equivalent); it will still pin, but it won't smoke. The series resistors, R3 and R4, are selected to produce a full-scale meter deflection when the op amp output is maximum.

To calibrate, let RX = 0 (a short). The meter will show no current (the op amp output voltage will equal the noninverting reference voltage). Now clip in a resistor for RX which is equal to whatever you want the full-scale meter reading to correspond to (1000 Ohms in the case of my TV-type rotor). Adjust R4 to obtain a full-scale meter deflection. Now, just to prove to yourself that it works, cut RX in half, and note the half-scale reading. Letting RX equal zero (shorted) will produce no meter deflection.

Selection of the zener diode should be made with one eye on the supply voltage. At full-scale meter reading, the output of the op amp will be approximately twice the zener voltage. If a 9 V zener is selected, the maximum op amp output will be 18 V; hence, a power supply voltage of at least 2 or 3 volts above this should be used. A 12 V or 24 V c-t transformer feeding a bridge or full-wave rectifier with a couple hundred microfarads on its output will yield about 18 volts and work just fine. Reference voltage (zener voltage) could then vary from 3 volts up to 6 or 7 volts with no problem. No power supply regulation will be required, unless you're powering something else from the supply and drawing a lot of current.

If the unknown resistance is connected to earth ground (or chassis ground) at either end, the circuit will still work if the power supply is completely floated. One end of the pot in my rotor was grounded, so I just floated the negative power supply lead above chassis ground and connected it only to the op amp circuit.

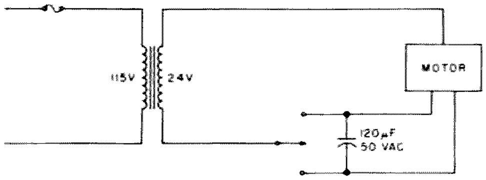

Fig. 2. Rotor motor drive scheme.

For those who are interested in fabricating the complete control head for a Cornell-Dubilier-type rotor, I offer the following. I have three different rotor types which all use the same driving scheme, shown in Fig. 2. C1 is a 120 µF/50 V ac rotor replacement capacitor. If this capacitor goes bad, the rotor will turn slowly and erratically, or will refuse to start. Try replacing it before you dismantle the antennas and bring the rotor down! Make sure the switch is a momentary center-off type. Alternatively, you could use a normal toggle switch there with a momentary pushbutton single-pole switch between it and the transformer. This scheme will not tell you that you have reached the rotor stop, except by the meter indication. If a momentary switch is not used, it would be easy to burn up a rotor motor by leaving power applied. ■

Reference

1. "Direct Reading Ohmmeter," V. Ramprakash, *Electronics*, November, 1976, p. 115.

Super Charger

—keeps nicads up to snuff

Jeremy A. Donimirski WA7YGB
PO Box 66369
Seattle WA 98166

Nickel cadmium (nicad) batteries are enjoying an unprecedented popularity as a result of the increased use of 2 meter FM by amateurs. Most 2 meter portable radios are nicad equipped.

While nicad batteries offer many advantages to the user, rapid recharge is not one of them. A regular nicad, excluding special types, requires 16 hours of charge time.

Under normal circumstances, the 16-hour recharge is not a problem. But, during periods of increased usage, such as special events, hamventions, or emergencies, the long recharge time can be inconvenient. A fast charge feature would be handy.

This article describes an automatic high/low rate charger which safely reduces the recharge time of a nicad battery by several hours.

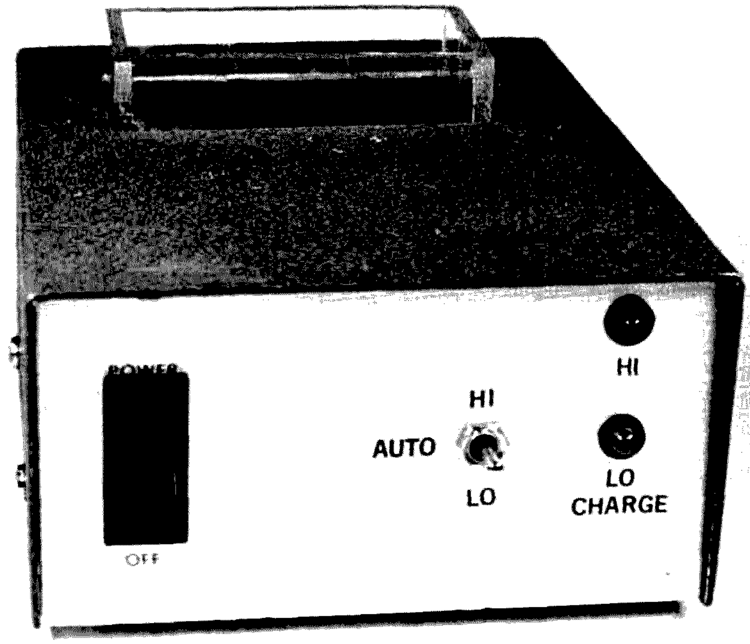

Automatic nicad charger.

Features

The automatic nicad charger features solid state construction, light-emitting diodes (LEDs), and manual override. The working parts of the charger are commonly-available transistors. Only one integrated circuit (a voltage regulator) is used.

Two LEDs indicate the charge rate. One of the two will light only when charge current flows. The charge rate is controlled either by the automatic circuitry or by the manual override switch. This switch may be used to set the charger to the 16-hour rate if speed is unimportant.

The manual override switch may also be used to set the charger to the high rate. The extra current of the high rate will charge a radio battery pack even while the radio is operating.

Readers who are unfamiliar with nicad batteries will benefit from two excellent articles by Pete Stark K2OAW.[1,2] These two articles describe the care and feeding of nicad batteries in detail.

Construction

The printed circuit board for the automatic nicad charger is divided so that it can be cut into two sections with a band saw and then interconnected with wires.

This configuration may simplify installation of the charger in an existing charger housing.

The PC board may also be left intact, if desired. The mounting location will govern the choice. The larger section of the printed circuit board contains the programmable current generator, while the smaller section contains the automatic circuits.

The charger need not be assembled as an automatic unit. By discarding the automatic circuitry and building only the programmable current generator in Fig. 6, you will have a dual-rate manually-controlled nicad charger.

The prototype automatic nicad charger was built with Plexiglas™ and a discarded power supply chassis. The charger socket was cut to size with a saber saw and then glued together with a cyanoacrylate "Magic Glue." The terminals in the prototype charger are vector clips, but brass rivets or nails may be just as suitable. Ball-point-pen springs are perfect to support the terminals.

Charger Theory

A nicad's worst enemy is heat. Hot places, excessive discharge, or excessive charge all can damage a nicad cell. Excessive charge will not necessarily damage a nicad, however, unless the charge rate causes heating.

When a nicad is depleted of charge, it is permissible to recharge it at a rate greater than normal for several hours without damage. Motorola sells rapid chargers which do exactly that — charge at a high rate until a thermistor, built into the molded battery, senses temperature rise. It then reduces the rate to a safe value. This technique is proven, and, with one variation, is used in the automatic nicad charger.

The automatic nicad charger described in this article samples the voltage across the charging contacts rather than the battery temperature. When a depleted battery pack is inserted into the automatic charger, the low battery voltage triggers the user-adjustable high charge rate, usually twice the normal rate. The high rate persists until the battery voltage exceeds a predetermined value. The automatic circuitry then lowers the rate to normal.

This method is more convenient than temperature sensing, although perhaps not as precise. Data published by the General Electric Company indicates that nicads do exhibit increasing terminal voltage during charge, especially during a rapid charge. This increase of terminal voltage is rather small per cell, amounting to only a small fraction of a volt. But the change becomes substantial when 8, 10, or more cells are connected in series. The typical amateur battery pack's voltage increase is more than a volt.

Because a nicad's terminal voltage varies with charge rate as well as state of charge, the automatic circuits must incorporate hysteresis in their operation. The high rate-sensing threshold must not coincide with the low rate-sensing threshold. There should be a volt or so of hysteresis between the two. The separated thresholds ensure stability.

To give an example of the instability which would result from no hysteresis, consider a charger whose single threshold voltage is being approached by a battery nearing completion of charge. The high rate is on when the threshold is finally reached. The charger then lowers the charge rate. But the lower charge rate is accompanied by a lower terminal voltage, which the charger interprets as a signal to switch back into high charge. The high charge rate raises the terminal voltage above the threshold and oscillation begins. Hysteresis prevents this, and the automatic nicad charger incorporates a potentiometer to set exactly the amount of hysteresis desired.

Almost everyone is aware that a nicad should be charged with a constant current. The solid state constant current source used in the automatic nicad charger represents a nearly ideal current generator.

An *ideal* constant current generator will adjust its voltage as necessary to force its rated current through the load. If necessary, the voltage will be adjusted to infinity. This is both impractical and dangerous.

A reasonable compromise from an ideal generator has been made in the automatic nicad charger. The maximum voltage available to the current generator is the output of an IC voltage regulator. As long as the regulator output voltage (about 18 volts) is several volts greater than the battery voltage, the current generator operates normally.

The constant current generator in the automatic nicad charger is based upon a well-established fact — the collector current of a properly biased class A amplifier is

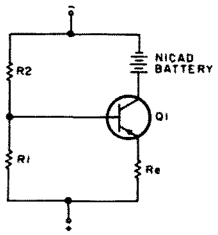

Fig. 1. Class A amplifier serves as a constant current source.

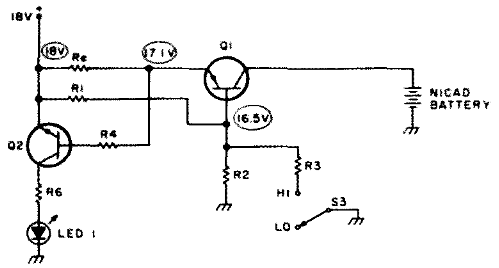

Fig. 2. Basic circuit for dual-rate nicad battery charger.

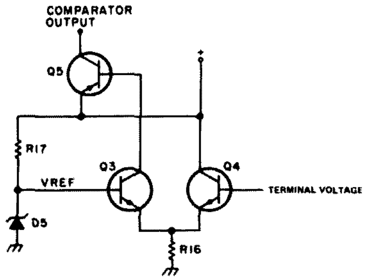

Fig. 3. Basic comparator composed of differential amplifier and peripheral parts.

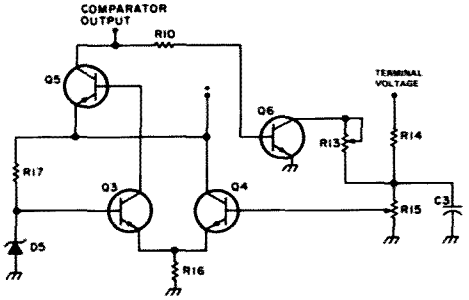

Fig. 4. Basic comparator with hysteresis added by Q6 and controlled by R13.

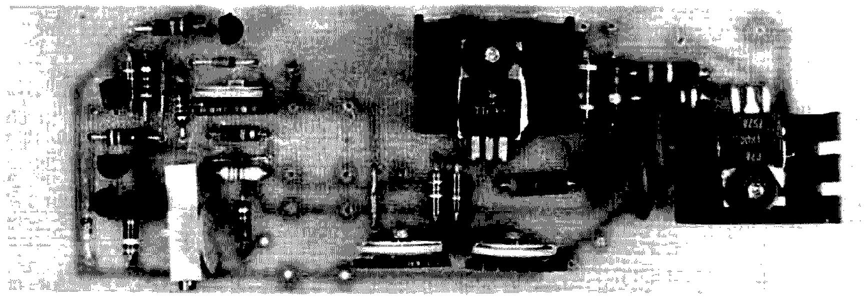

Completed circuit board.

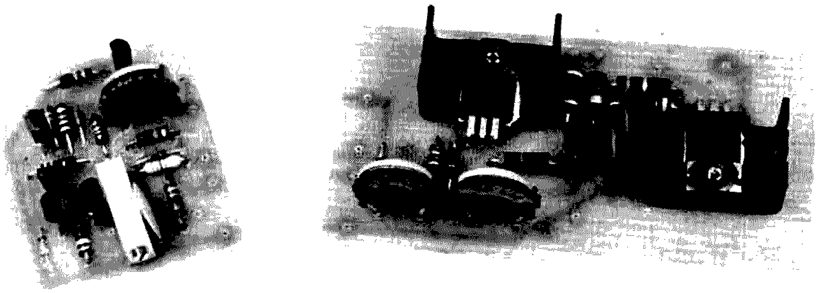

Completed circuit board cut with a band saw to allow easier mounting.

constant. Refer to Fig. 1. Notice that the common emitter amplifier in the figure has a nicad battery in place of the usual collector resistor and that the stage amplifies no signal.

The base bias of the transistor determines the value of the collector current. Specifically, lowering the value of resistor R2 will raise the collector current. If the appropriate value of resistance is switched across resistor R2, the result is a dual-rate nicad charger. This is the basic principle upon which the programmable current generator of the automatic nicad charger is based.

Fig. 2 is identical to Fig. 1, except that it is redrawn to more closely resemble the complete automatic nicad charger schematic. Included is PNP transistor Q2, which is a solid state LED switch, and R3, which changes the charge rate. The voltage drop across R_e, caused by charge current, biases Q2 into saturation, turning on the LED. Switch S3 increases the collector current when it connects resistor R3 in parallel with R2.

Resistor Value Calculations

The values of the resistors in Fig. 2 can be computed once the regulator output voltage and the charge current are established. The prototype unit was built for an 8-cell nicad battery (nominal 10 volts). An 18-volt regulator was chosen to allow for voltage drops in the circuit. Normal and high charge rates were chosen to be 50 mA and 100 mA, respectively. A 10-cell nicad battery will require a higher voltage regulator, such as 24 V.

The value of emitter resistor R_e is determined first. Although it is desirable (for temperature stability) to have a voltage drop of 15% of the supply across R_e, it is not always practical to do so. Power dissipation limitations and available voltage might dictate a compromise. The prototype charger was built with a 5% voltage drop across R_e. Empirical results indicate a 10% change in charge current as a result of transistor heating under load.

To find a resistor value which will have a 5% drop across it at the lowest charge rate, take 5% of 18 volts, which is 0.9 V. In no case should the drop be less than 0.75 volts, the minimum required for the LED switch. By Ohm's Law, 0.9 V and 50 mA (charge rate) mean a resistor of 18 Ohms, the value of R_e. The value of this resistor may be larger, but never smaller, than the 18 Ohms.

Calculation of the remaining circuit resistors depends upon the base voltage of the transistor. This voltage will always be about 0.6 volts offset from the emitter, if a silicon transistor is used. For the circuit in Fig. 2, the base voltage will be lower than the emitter.

The voltage divider, consisting of R1 and R2, must be designed to divide the 18 volts to the appropriate base voltage. For stability, the current flowing through the divider should be about 10 times the transistor's base current.

A transistor's base current is related to its collector current by its beta specification. If we assume a beta of 40 for the transistor and a collector current of 100 mA, the base current will be 2.5 mA (100/40). The current through the voltage divider should therefore be 25 mA.

Resistor R1 may now be calculated using the 25 mA figure along with the base voltage at the low charge rate. A voltage drop of 1.5 volts (0.9 V + 0.6 V) and a current of 25 mA yield a resistor value of 60 Ohms, a nonstandard value. Either 56 or 62 Ohms may be used, since R2 will be a variable resistor which will set the base voltage precisely.

The value of R2 can be calculated from the voltage across it and the current through it. It is about 600 Ohms. A lower value will raise the charge rate. This is done by switching a parallel resistor across R2. In the automatic nicad charger, this can be done either manually or automatically with a voltage comparator.

Comparator Theory

The basic function of the comparator is to compare the battery terminal voltage dur-

ing charge with a known reference, a 5-volt zener diode. If the terminal voltage is above the level of the reference, the output is low. Refer to Fig. 3.

The circuit in Fig. 3 is a differential amplifier composed of two NPN transistors (Q3 and Q4) which share a common emitter resistor. One of the transistors has a PNP transistor base emitter junction in series with its collector. This PNP transistor (Q5) is a switch which changes state according to which NPN transistor is conducting.

When the terminal voltage is lower than the reference, the voltage across the emitter resistor is determined solely by the reference. Specifically, it is one base-emitter drop (0.6 V) lower than the reference. Transistors Q3 and Q5 are both on at this time.

When the terminal voltage is greater than the reference, the voltage across the emitter resistor follows the terminal voltage (less 0.6 volts). Transistor Q4 turns on, and transistors Q3 and Q5 both turn off, due to insufficient bias current.

When the terminal voltage is exactly equal to the reference, the output is indeterminate, neither on nor off. This is an undesirable condition to which commercial comparators are also subject. The high gain of a commercial comparator assures an abrupt transition, minimizing the problem.

The differential amplifier comparator of Fig. 3 exhibits a slow transition as a result of relatively low stage gain. This is not a problem in this application, however, since a volt of hysteresis will be used in the automatic nicad charger.

Fig. 4 is a comparator with hysteresis. The terminal voltage is divided by a series combination of a resistor and a potentiometer. The hysteresis is introduced to the divider by transistor Q6 and resistor R13.

When the terminal voltage is much higher than the

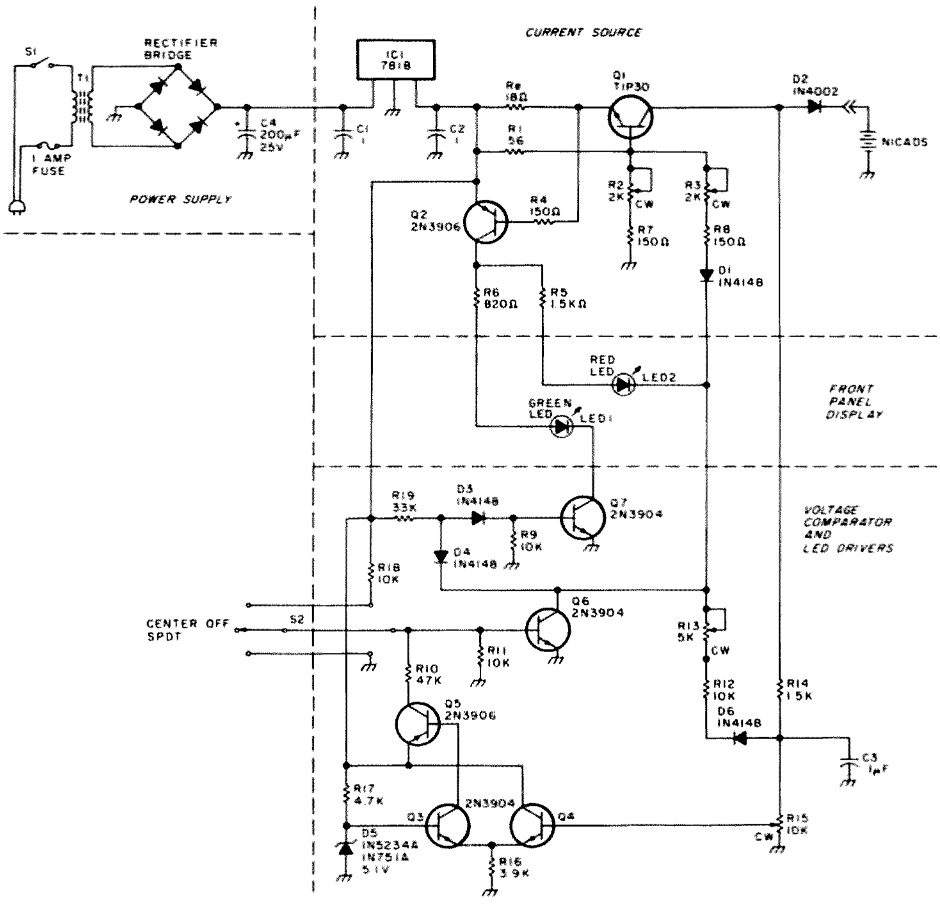

Fig. 5. Automatic nicad battery charger — complete schematic.

threshold level (as it is with no battery connected), Q6 is off and does not affect the voltage at the potentiometer.

Upon reaching the threshold, the decreasing terminal voltage starts the comparator into its slow turn-on transition. Transistor Q6 also turns on at this time, shunting some current away from the potentiometer. This further reduces the voltage across the pot and increases forward bias to Q6. The avalanche action doesn't stop until Q6 is saturated. Because of the path to ground through Q6 and R13, the threshold level is affected.

This deliberately-introduced hysteresis causes a fast "snap action" and a separation of the negative-going (lower) threshold from the positive-going (upper). The terminal voltage required to turn off the comparator is greater than the voltage which turned it on originally. R13 determines the magnitude of this difference and is used to set the upper threshold. The lower threshold is set solely by potentiometer R15.

Circuit Operation

Refer to Fig. 5, the schematic of the complete automatic nicad charger. IC1 is an 18-volt regulator and requires at least 21 volts at its input. Capacitors C1 and C2 bypass the IC voltage regulator to prevent it from oscillating.

R2 adjusts the low charge rate (50 mA in the prototype), while R3 adjusts the high charge rate (100 mA in the prototype) with the cathode of D1 grounded. Diode D2 prevents the battery from discharging into the charger should S1 be turned off. D1 prevents stray voltages from affecting Q1's operation.

R5 and R6 limit the current to the LEDs, as R4 limits the current to Q2. R6 is one half the value of R5, to make up for the lower efficiency of the green LED.

R7, R8, and R12 all perform similar functions. They all maintain a minimum resistance in series with their respective potentiometers, R2, R3, and R13.

Diode D6 prevents voltages from other parts of the circuit from affecting the threshold pot. Capacitor C3 stabilizes the voltage divider. Transistor Q6 controls the charge rate. When it is completely on and charge current is flowing, the red LED illuminates and the charger is in high rate.

Q7 controls the green LED, which indicates the low charge rate. Diode D3 adds a 0.6-volt drop in series with Q7's base, making its turn-on voltage 1.2 volts. Bias for Q7 normally flows through R19 and D3. When Q6 turns on,

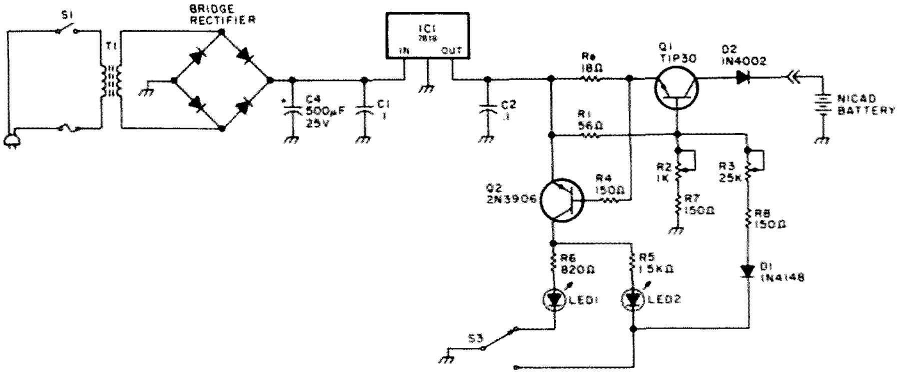

Fig. 6. Dual-rate manually-controlled nicad battery charger.

however, it diverts the bias current through D4 and shunts it to ground. With no bias, Q7 is off and so is the green LED.

Transistor Q6 normally responds to the voltage comparator's output. Switch S2 allows manual control of the charge rate by forcing Q6 on or forcing it off. A center-off switch must be used for S2 to assure that automatic operation is not impaired in the center position. Both S2 and R18 may be deleted if manual override is not desired.

Special Parts

Several special parts are required for the automatic nicad charger and should be discussed. The first is a pair of heat sinks for Q1 and IC1. There is sufficient room on the PC board to accommodate a commercial or a home brew heat sink. Sheet copper or aluminum can easily be fabricated into a suitable heat sink, using the prototype as a guide.

Zener diode D5 can theoretically be any voltage value lower than the battery to be charged. There is a good argument to use a 5-volt zener, however. 5 volts is a boundary between negative temperature coefficient diodes (lower than 5 volts) and positive coefficient devices (greater than 5 volts). A 5 V zener resists temperature effects much like an NPO capacitor. It is an inexpensive way to assure a stable reference.

Threshold-setting potentiometer R15 is a 15-turn precision type, either a Beckman model 89 or a Spectrol model 43. It is often available as surplus from companies such as Poly Paks.[4] New units may be purchased from James Electronics.[3]

Resistor R14 may be an ordinary carbon composition type, but better circuit stability will result if a metal film resistor is used. The change of resistance of a carbon composition due to time, temperature, or humidity will affect the threshold voltage. A metal film will assure stability. The film resistor for the prototype was found in an assortment purchased from Radio Shack.

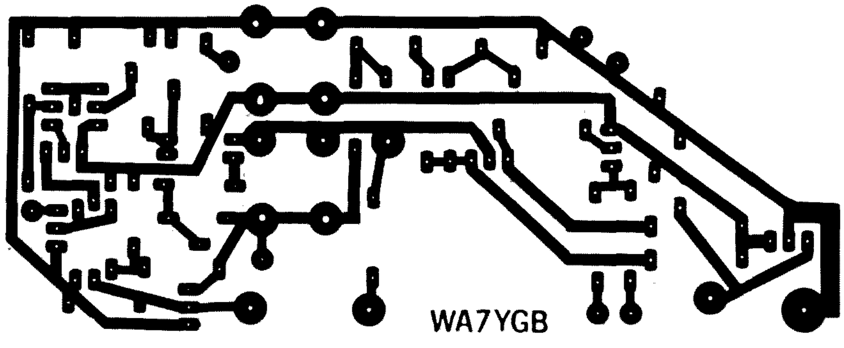

PC board.

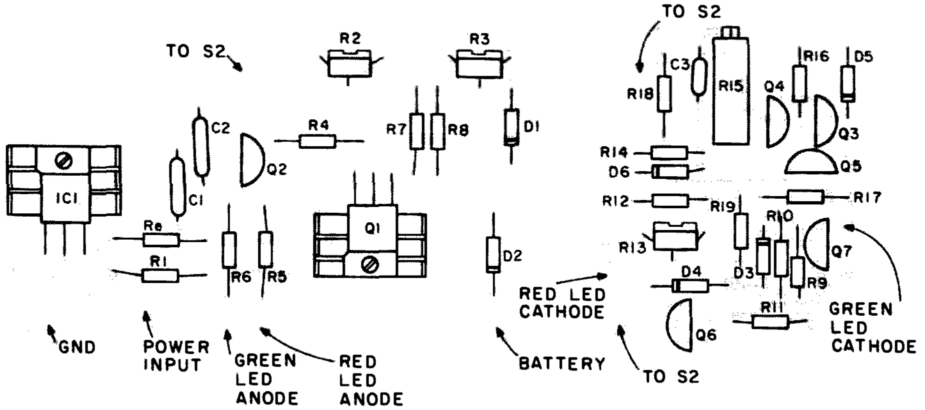

Component layout.

Adjustment

It is preferable to first assemble and test the constant current source and then the comparator. The constant current source is needed to determine the voltage characteristics of the nicad battery to be charged. These characteristics will be used to set the voltage comparator.

Assemble the current source and connect it to a power supply. Only an ammeter is necessary for adjustment. Connect the ammeter between the cathode of D2 (the output) and ground. Turn on the power supply and adjust R2 for the desired low charge rate. Then ground the cathode of D1 with a wire and adjust R3 for the high charge rate. The constant current source may now be used to test the battery.

To properly determine the characteristics of the battery, first discharge it completely (taking care not to reverse any cells). Measure and note the voltage of the battery. Then charge it at the high rate for 5 hours, and again measure and note the battery voltage (while charging). Keep these figures for the

comparator adjustments.

Next assemble the comparator section. Take care to properly locate the various NPN and PNP transistors. Once completed, the comparator may be adjusted. The same power supply used to determine battery characteristics may be used again for the comparator test. A 2-Watt, 500-Ohm wire-wound rheostat will be required to complete adjustments.

Prior to any adjustment efforts, one end of diode D1 must be lifted from the current source portion of the printed circuit board. The 500-Ohm rheostat, which will simulate a battery, should be connected between the output (cathode of D2) and ground. A voltmeter should be connected across the rheostat.

Set R13 to its midpoint prior to proceeding. Then turn on the power supply, adjust the rheostat for maximum voltage, and verify that the green LED (indicating low charge rate) is on. Slowly rotate the rheostat toward minimum voltage and note the voltage value at which the red LED comes on.

Threshold potentiometer R15 will adjust the value at which the red LED turns on. It should be set to a value approximately halfway between the two battery voltages determined previously, or about 1 to 1.5 volts below the 5-hour charge value. Verify that R15 is correctly set by returning the rheostat to maximum voltage and repeating the test.

It has probably become very evident that the red LED turns off at a different voltage than it turns on. This is the hysteresis mentioned earlier and is the next adjustment.

Measure the voltage (across the rheostat) at which the red LED just turns off. If this happens to be at the 5-hour charge value, there is no need to proceed any further. If not, adjust R13 until it is. Rotate the rheostat several times to minimum and back to maximum to verify that the lower and upper thresholds are correct.

The lower threshold for the prototype battery was set at 10.5 V, while the upper threshold was set at 11.5 V. Respectively, this equals 1.3125 V per cell and 1.4375 V per cell. The upper threshold is the important one. The lower is set somewhat arbitrarily.

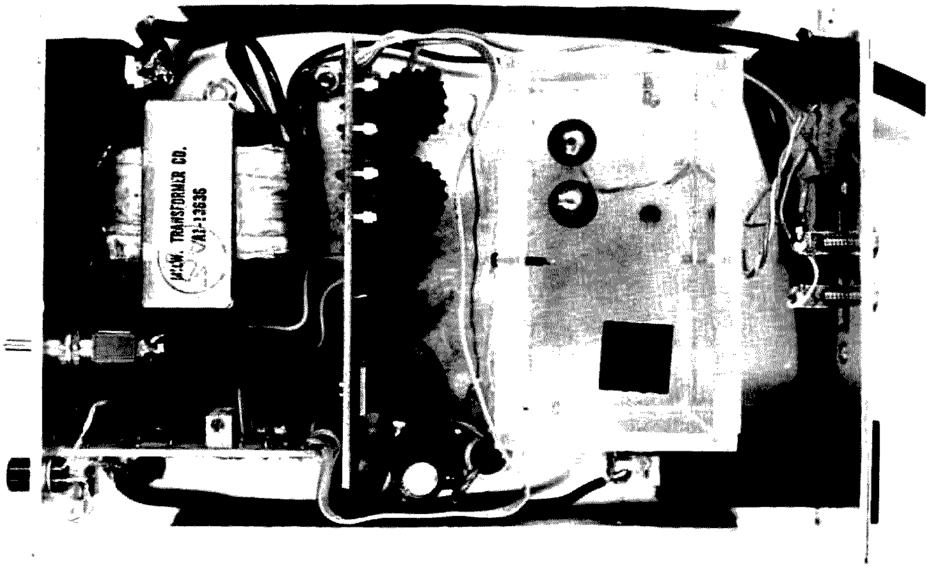

Top view of charger with cover removed.

Conclusion

The automatic nicad charger prototype has been operating flawlessly for more than a year. It can always be trusted to initially switch into high charge and then switch into low upon delivery of an adequate amount of charge. A particularly convincing test can be made with a fully charged nicad pack. Upon insertion into the

Parts List

Re	18 Ohms, ½ Watt (see text)
R1	56 Ohms, ½ Watt (see text)
R2, R3	2.5k Ohm PC potentiometer (Radio Shack 271-228 or equivalent)
R4	150 Ohms, ½ Watt
R5	1.5k Ohms, ½ Watt
R6	820 Ohms, ½ Watt
R7, R8	150 Ohms, ¼ Watt
R9	10k Ohms, ¼ Watt
R10	47k Ohms, ¼ Watt
R11, R12	10k Ohms, ¼ Watt
R13	5k Ohm PC potentiometer (Radio Shack 271-217 or equivalent)
R14	1.5k Ohm, ¼ Watt (metal film or other stable type — see text)
R15	10k Ohm precision trimpot (see text)
R16	3.9k Ohms, ¼ Watt
R17	4.7k Ohms, ¼ Watt
R18	10k Ohms, ¼ Watt
R19	33k Ohms, ¼ Watt
D1	1N4148
D2	1N4002
D3, D4	1N4148
D5	1N5234A or 1N751A 5.1 V zener diode
D6	1N4148
IC1	7818 or 7824 depending on the battery (see text)
C1-3	.1 uF ceramic disc 25 V
Q1	TIP30, 2N6489, or equivalent
Q2	2N3906, 2N4403, or equivalent
Q3, Q4	2N3904, 2N4401, or equivalent
Q5	2N3906, 2N4403, or equivalent
Q6, Q7	2N3904, 2N4401, or equivalent
S1	SPST switch
S2	SPDT center-off switch
LED1	green light-emitting diode
LED2	red light-emitting diode
T1	24 V transformer (Radio Shack 273-1386 or equivalent)
Bridge Rectifier	(Poly Paks 92CU1346 or equivalent)[4]
C4	200 uF 25 V electrolytic
S3	SPDT toggle switch (for manual model only)
Charger housing (home brew or purchased from radio manufacturer)	
Line cord	
LED mounting hardware (Cliplite — Tri Tek, Inc.)[5]	
1 Amp fuse	

charger, the rate is high, but it slips into low upon sensing the full charge of the battery. This usually occurs within 15 seconds, indicating the viability of the design approach.

It is important to check the battery pack to be charged for shorted cells. If any of the cells are reverse charged, they should be corrected as per K2OAW's suggestions. A shorted cell will confuse the automatic nicad charger and prevent it from switching to low charge. This may be detrimental to the entire pack.

Since the comparator samples the voltage at the charger terminals, it can be fooled by unexpected voltage drops. Corrosion on the terminals can cause this, as can an unexpected protection diode built into a radio.

If your radio has a built-in diode to prevent inadvertent discharge, its diode voltage drop must be considered when setting the comparator. And the battery terminals should be kept free of corrosion.

Every effort was made in this article to describe the circuitry in fine detail. I hope that no unclear concepts remain in your mind. However, I will answer any questions you have if they are accompanied by a self-addressed stamped envelope.

Acknowledgement

Many thanks to Dave K7BKX for helping construct the charger socket and for suggesting the use of vector clips as spring-loaded contacts. ■

References

1. "Making Nicads Behave," K2OAW, *73 Magazine*, December, 1974, p. 24.
2. "Zapping Dead Nicads to Life," K2OAW, *73 Magazine*, January, 1976, p. 62.
3. James Electronics, 1021 Howard Ave., San Carlos CA 94070.
4. Poly Paks, PO Box 942, South Lynnfield MA 01940.
5. Tri Tek, Inc., 6522 N. 43rd Ave., Glendale AZ 85301.

HW-101 Owners, Check This!

—RIT mod for the good old HW-101

Anton Ruepp HB9BLU
Landstrasse 169
5422 Ob. Ehrendingen
Switzerland

In your Holiday, 1976, issue I found an interesting article titled "Add RIT to your Transceiver." My HW-101 needed that modification, especially since the CW filter was inserted. I was afraid to take the vfo apart because of the mechanical work and realignment required. So I had to find an easy way to add RIT to it.

Referring to Fig. 1, C2, R8, D4, and C3 must be installed very close to the tube V 20 on top of the vfo. The connection between C3 and pin 1 of V 20 is a very thin wire inserted into the socket of pin 1.

The other part of the circuit is mounted on a PC board. The switch is on the right, and the potentiometer is on the left side of the S-meter. The LED near the pot indicates RIT "on."

The adjustment is very simple: Set R7 to midrange (S1 off); recalibrate vfo coil (L941). S1 is now on. Adjust the shaft of R6, and tighten the knob so that it's pointing upwards.

This circuit functions well and should be of interest to the many HW-101 owners. ■

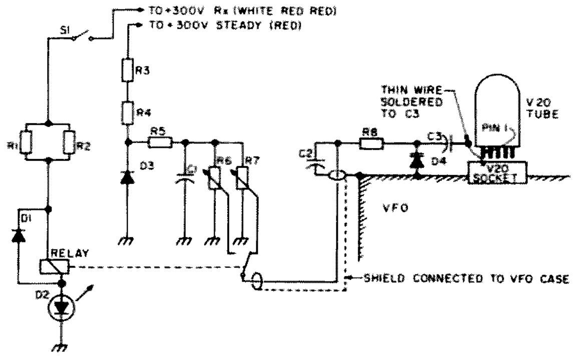

Fig. 1.

Parts List

R1, R2	47k, 2 W	depends on what type of relay is used (I had a 48 V/12 mA)
R3, R4	22k, 2 W	
R5	27k, ½ W	Note: If the zener voltage is not too high for D4, forget R5.
R6	250k lin	potentiometer on front panel
R7	250k	adjustable resistor
R8	220k, ½ W	
C1	0.047 mF, 50 V	
C2	0.01 mF, 50 V	
C3	10 pF ceramic	
D1	1N4148	
D2	red LED	any type capable of handling the relay current, for the front panel
D3	zener 20-27 V	(I had a 22 V)
D4	varactor diode	any 50-15 pF type (sorry, I don't know the American types)
Relay		any convenient type — current should not exceed 15 mA
Switch		any toggle switch capable of handling 300 V dc/50 mA for the front panel

Sidetone Is A Must

—improves your fist enormously

Carl Wagar VE3EKR
PO Box 911
Waterloo, Ontario
Canada N2J 4C3

"Skwaaa skwi skwaa skwik, skwaa skwaa skwi skwaaaa." Is that what you hear when you transmit? It might be, especially if you are listening to yourself in your own receiver.

This is a symptom of a curse which falls upon each new ham. Never able to afford a nice new transceiver with a good sidetone, the beginner is forced into a make-do situation. A borrowed receiver-transmitter combination got me started in amateur radio. Once I put up an antenna, everything went fine until I had to transmit. Then the melodious tones of the code practice oscillator (CPO) left my ears forever.

Twist ... receiver rf gain down. Click ... antenna relay. Click ... transmitter on spot. Tap ... key down, meter moves. Twist ... receiver rf gain up. Weeeeeeoooooooeeeeee. Bfo adjust ... beeeep beeeeep. Sounds good? Now call that CQ!

Eventually, the maturing ham begins looking for a better sidetone system. I tried them all. First there was that one-transistor circuit with the wire wrapped around the transmitter tank coil. When it sounded more like a flock of birds than a radio, I switched to "better" circuits. They had one that used three transistors and hooked up directly to the center conductor of the coax. When that circuit kept burning up resistors and made a chirpy bumblebee sound, I moved on to the next idea. I finally found two reed relays and connected them up so that both relays would be activated by the Morse key. One relay would switch the transmitter, and the other keyed a 99¢ code practice oscillator. This worked fairly well, except that the relays would stick and the CPO sounded like it was worth 29¢.

I finally gave up and transmitted in silence for several years, even with my newer but silent transceiver. But a true ham would never give up, at least not forever. I didn't, and I'm going to share my revelation with you. While browsing through some electronic keyer circuits, I came across the idea: Why not build an electronic keyer without the electronic part?

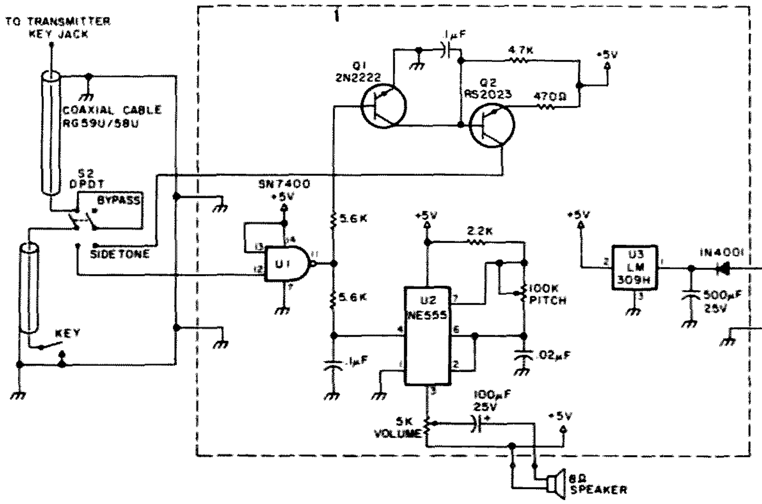

Fig. 1. Schematic diagram.

The electronic keyer is designed to give you properly spaced dits and dahs and is used with a paddle-type key. But remember, it still must key the transmitter and use a sidetone, too. Hmmmm. Here's a two-transistor circuit for keying the rig and a CPO. If I hook them up to the same key, I've got it!

How It Works

I think that this circuit is an ideal project for the new ham. Some of you might be swamped with all the fancy and complex circuits you see in 73. Someday, you say, I'm going to be able to make one of those. Undoubtedly, though, you'll need some practice at building simpler projects in the meantime. I assume that you know what transistors, capacitors, and resistors are. Maybe you haven't used a transistor yet. Well, this project has two of those. Maybe you're curious about those integrated circuits, the little black spider things with shiny legs. Well, there are three of those in this project. Now don't leave yet. How are you ever going to tackle complex things if you don't give this a try?

Look at the schematic diagram shown in Fig. 1. In the top right-hand portion of the diagram, you will see two transistors. Q1 is an NPN-type transistor, and Q2 is a PNP transistor. This is the circuit which keys the transmitter. The base of Q1 is connected through a 5.6k Ohm resistor to the output of a strange-looking symbol that you may not recognize. This is part of one of the integrated circuits called a NAND gate. If you'll bear with me, I'll explain that in a moment, but, first, all you need to know is that, when you press down on the Morse key, the voltage on the output of that NAND gate goes from zero volts to five volts. This voltage is applied to the base of Q1 and turns on this transistor. This causes current to flow through the 4.7k resistor, into the collector of Q1 and then out of the emitter of Q1 into ground. What this does is lower the voltage on the base of the PNP transistor, Q2, from five volts to near zero volts. This causes Q2 to turn on, which supplies current to the transmitter keying circuit, provided S2 is set on "sidetone." This circuit is designed to key a transmitter which has what is known as grid-block keying. Be sure that your transmitter works this way. Since many of you are most likely using the older, tube-type transmitters, they will likely use either grid-block keying or another type called cathode keying. If your transmitter uses cathode keying, don't give up. You will need to modify your project by using the cathode keying section shown in Fig. 2.

Now I'll get back to that thing called the NAND gate. Since a lot of circuits you see in *73 Magazine* these days use these NAND gates, maybe you should sit down and read this carefully. A NAND gate is just a kind of electronic switch. The term NAND is just a short form for the term NOT AND. If that sounds confusing, keep reading. A NAND gate has three connections besides the two extra power connections of five volts and ground. Of these three connections, two are called inputs, and the other is an output. If you look at the symbol for the NOT AND gate, you will see that one end is round with a little circle on it. The wire connected to that little circle is the output. The other end is square, and the two wires connected to it are inputs.

Everything to do with this gate works on two voltages. Five volts is called a high voltage, and zero volts is called a low voltage. Here's how a NOT AND gate works: The output will usually be high, but, if you connect a high voltage to one input AND the other input, the output will NOT be high. So if both inputs are low, the output will be high. If one input is high and the other is low, then the output will still be high. If the first AND the second inputs are high, then the output will be NOT high or, in other words, low. So, can you see why they named this little NAND gate the way they did?

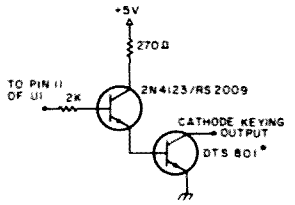

*Fig. 2. Cathode-keying circuit. *High-voltage, high-current silicon power transistor or equivalent — ECG-165. It must have Vce greater than plate voltage of final transmit tubes.*

In Fig. 1, note that one of the inputs to the NAND gate is connected to five volts, and the other input is connected to the Morse key. There are four of these NAND gates contained in one integrated circuit called the SN7400. This type of integrated circuit is called TTL, for transistor-transistor logic. The peculiar thing about TTL is that, when you leave an input unconnected, it treats it as though it were connected to a high (+5 V) voltage. So here we see that one input is connected to five volts, and, when the key is up, the other input acts as though it were connected to five volts. The result is that the output remains low until you depress the key. This grounds one of the inputs and causes the output to go high. This activates the transistor circuit and keys the transmitter. Key the key, and the transmitter transmits. It works! Using the logic circuit eliminates sparks

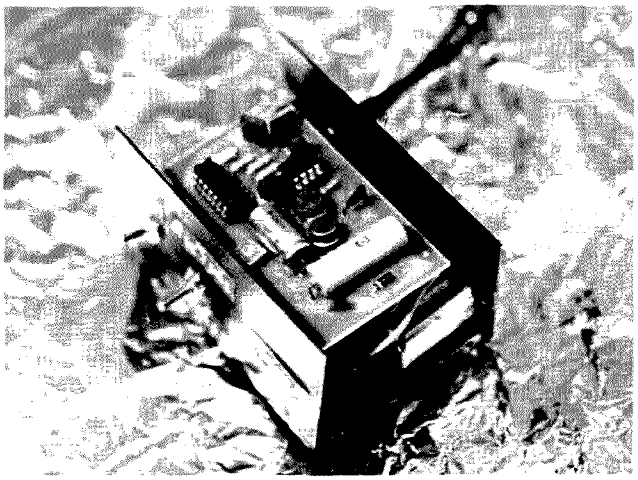

and clicks and helps you learn about integrated circuits!

The next part of the circuit is the code practice oscillator part. It uses a complex integrated circuit called a timer. It is the NE555. You will see this component in Fig. 1. It is labeled U2 and has a rectangular shape. Whenever you see a box like this on a schematic diagram, you can be sure that it represents a complex circuit of some sort. You don't need to know

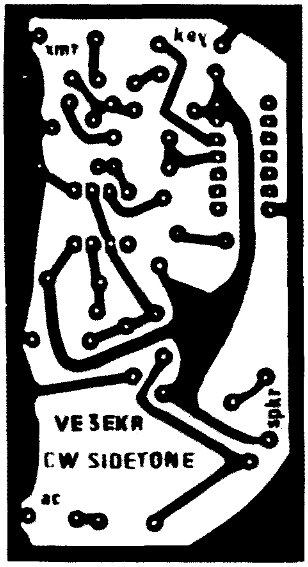

Fig. 3. PC board — full size, copper view.

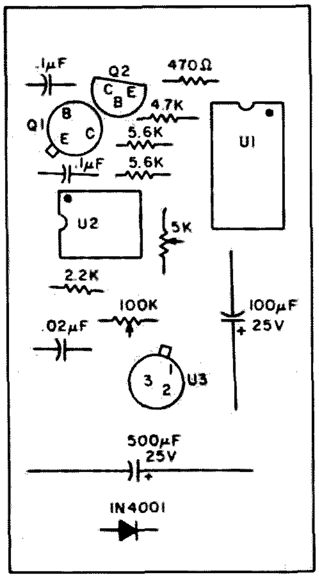

Fig. 4. Parts layout — bottom view.

what's inside an integrated circuit in order to use it. That's the nice thing about ICs (integrated circuits) — you just hook them up and they work.

Connecting a speaker, a volume and tone control, a few resistors, and a few capacitors to this IC gives you a nice sounding, fully adjustable oscillator. When a positive voltage is applied to pin 4 of the 555 circuit through the 5.6k resistor, a tone will be heard in the speaker. When this voltage goes low (the gate output goes low because the key is up), the tone disappears.

Now isn't that neat! Depress the key, and it activates both the transmitter and an audio oscillator at the same time! The only thing left to explain is the power supply that gives us five volts. Using a third integrated circuit gives us five volts, no muss, no fuss. The LM309H integrated circuit voltage regulator has three terminals and looks just like a transistor. Hook one terminal to ground, another to an input voltage from 9 to 30 volts, and you get five volts out the third terminal. You could hook up a nine-volt battery to this, but it might not last very long. I decided to make it so that the circuit could be plugged into the wall.

The power supply section is shown in the bottom right-hand corner of Fig. 1. When S1 is closed, 120 V ac enters the transformer, T1, from the wall outlet. This is transformed down to 12 V ac and is rectified by the 1N4001 diode. We now have pulsating 12 V dc. The ripple is filtered out by the 500 uF capacitor, and 12 V dc is applied to the input of the LM309H. Out of pin 2 of U3 pops +5 V dc, which is then supplied to the circuit.

Everything that is shown inside the dotted box in Fig. 1 can be put on one printed circuit board. Note that S1 turns the sidetone circuit on and that S2 switches between sidetone and bypass. When S2 is set on sidetone, the sidetone circuitry will function if S1 is on. When S2 is in bypass position, this connects the Morse key directly to the transmitter and completely bypasses the sidetone circuit. Note that coaxial cable is used to wire up the key to the sidetone and the sidetone to the transmitter. This eliminates the possibility of rf affecting the sidetone circuitry. So there you have it — a super sidetone circuit!

Construction

Now that I've convinced you that this is a fine little circuit, I've got to convince you to build it. In order to make it easier for you to build, I've designed a printed circuit board layout. Now, I realize that this printed circuit board business may be new to you. If you can get some practice by making this one, though, it'll bring you that much closer to doing some advanced projects. There have been some good articles on making printed circuit boards in *73 Magazine*. It would be well worth the trouble to do some extra reading.

Those of you who already know something about photography will find the printed-circuit-making process fairly simple. The end product is, of course, a PC board. This is a flat, 1/16-inch-thick epoxy fiber board with patterns of thin copper strips on one side. Components are inserted through holes in the board, and the leads are soldered to the copper on the opposite side of the board. The copper strips on the bottom of the board are created through a process known as etching. Originally, a PC board has one side completely covered with a layer of copper. A pattern of etch-resistant material is then applied on top of the copper. This can be done with special pens that have a special ink, or it can be done by applying strips of tape with adhesive backing. The best way is to apply a coating of special light-sensitive plastic and then photographically remove the plastic from the areas of copper that are to be etched away. In all three methods, the idea is to protect certain areas of copper on the copperclad board from the etching solution into which the board is then placed. The unprotected copper is then etched away, leaving the pattern of copper strips that is required for the circuit.

Most electronic stores sell kits with all of the chemicals and materials that you need to make PC boards photographically. As with any other photographic process, you need a negative in order to make the print, which, in this case, will be on the PC board. To make it simple for you to make a PC board, Fig. 3 is a negative of the pattern for the PC board. I have made good PC boards by taking such a pattern from a magazine and making a Xerox® copy of it. Then, in a darkened room, you take the copperclad board and coat it with the light-sensitive coating. Once it is dry, you place the Xerox® negative against the copper surface and sandwich the whole thing between two pieces of glass. Then run outside and expose it to sunlight for several minutes, or buy yourself a suntan lamp to expose it. Most photoresists require the ultraviolet light of the sun in order to work. You can then return to your darkroom and place the board in a resist developer solution. This removes the plastic coating from the unexposed parts of the board. Then all that you do is put the board into the etching solution, and ten minutes later you've got a nice PC board! This method is a little crude, but it works fine. Those of you who are photographers may wish to make actual negatives and use Kodalith or some such material for contact printing. Either way, you should endeavor to get a PC board made, as it makes construction much simpler.

Now that you've got a PC board, you will need to get

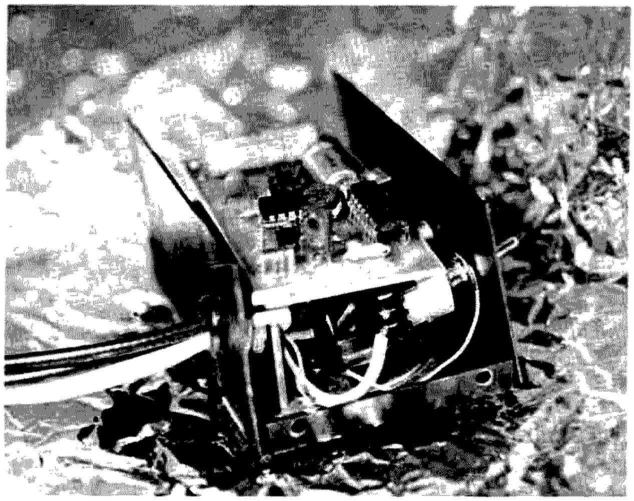

Parts List

U1 – National SN7400N quad 2-input NAND gate IC or equivalent
U2 – Signetics NE555 timer IC or equivalent
U3 – National LM309H IC voltage regulator or equivalent
Q1 – 2N2222 NPN transistor or any equivalent silicon transistor
Q2 – RS-2023/MJE350 PNP transistor with Vce > 50 V or equivalent
S1 – SPST toggle switch
S2 – DPDT toggle switch
4.7k ¼ W resistor
2.2k ¼ W resistor
470 Ohm ¼ W resistor
two 5.6k ¼ W resistors
1N4001 50 pv 1 A rectifier
100k printed circuit potentiometer
5k printed circuit potentiometer
two .1 uF ceramic disc capacitors
.02 uF ceramic disc capacitor
100 uF 25 V electrolytic capacitor
500 uF 25 V electrolytic capacitor
115 V ac to 12 V ac filament transformer, 250 mA
8-Ohm miniature speaker
coaxial cable, hookup wire, cabinet, nuts, bolts, etc.

the parts to put onto it. See the parts list. All of these parts are available from the mail-order distributors advertising in *73 Magazine* or from your local electronics store. Q1 can be any good silicon transistor such as the 2N2222. Q2 can be any PNP transistor, but one specification is important. It must be able to withstand the key-up voltage of the transmitter. This means that the specification called Vce must be probably at least 50 V. The 276-2023 available at Radio Shack will do. The Motorola MJE350 has a Vce of 300 V, and I used one of these that I had in the junk box. The integrated circuits, numbered 7400, 555, and LM309H, are fairly common. Make sure that you get the LM309H, as the "H" implies that it is in a small can. If you get an LM309K, it will take up too much room. The volume and tone controls that I used were the printed-circuit-board type that fit onto the board. If you want to be able to adjust these often, you could buy the large cabinet-mounting type, and put them on the cabinet that you install the sidetone in. You could then run wires from the controls to the PC board. The resistors and capacitors as well as the speaker and switches should be easy to obtain.

Once you've got all the parts, it's time to install them on the PC board. First, however, you've got to drill the holes in the board. If you own a high-speed drill press capable of drilling very small holes, then you're okay. But, if you are like me, you have an old beat-up hand drill. It most likely won't accept bits smaller than 1/16th inch. You could drill the holes with a 1/16th bit, but they would really be too big. Your best bet is to find a hardware store that has the finer drill bits. A #58 drill bit is ideal, and, if they have that, they also probably have a special chuck that will hold these small bits. A shaft extends from this chuck, and it will fit into the chuck of your electric hand drill. If you get one of these little adapters, then you'll be all set. Just drill away until you've done all of the holes.

If you've never done any small-size soldering, then you may need some practice. You need a low-power soldering iron with a small tip and some small-diameter resin core solder. For soldering the two multilegged DIP (dual-inline-package) ICs, you should use integrated circuit sockets or the cheaper molex pins. This way, you can replace the ICs easily and solder the sockets to the PC board without fear of overheating the ICs.

Install the parts according to the parts layout shown in Fig. 4. Push the leads of the capacitors, resistors, and transistors through the proper holes. Bend and clip the wires on the opposite side, and solder them into place, being careful not to overheat them. Pin diagrams for the transistors and ICs are shown in Fig. 5. Of course, if you are using a substitute transistor, make sure you know the pin diagrams for it. Observe the polarities of the electrolytic capacitors and the diode. The integrated circuits must also plug into their sockets in the proper direction. Pin 1 usually has a dot on the plastic case above it, or there is a notch cut in the end of the IC to indicate positioning. The regulator chip has a little tab sticking out of the side of its can.

Once you have all of the parts installed, look carefully at all of your solder connections. Make sure that there are no cold solder joints or solder "bridges" – shorts between adjacent solder connections. If you want to make sure it works before putting it in a cabinet of your choice, you can do the following: Solder wires to the appropriate points on the board for the speaker, the key, the transmitter, and the transformer. Before connecting the power, unplug the ICs. Plug in the 12 V transformer to the wall, and, if your circuit board passes the smoke test (no smoke), then it is probably safe to plug in the ICs. Then connect the key, the speaker, and the transmitter, and apply power. With the transmitter on standby position, when the key is depressed, you should get a tone in the speaker. You may have to adjust the tone or volume controls before you can hear anything. If that works, then hook up the transmitter, ground to ground, transistor output to transmitter key input. Take the transmitter off standby position and into transmit mode. Hopefully, it won't transmit until you depress the key. Then you hear the oscillator oscillating and see that the transmitter is transmitting. It works!

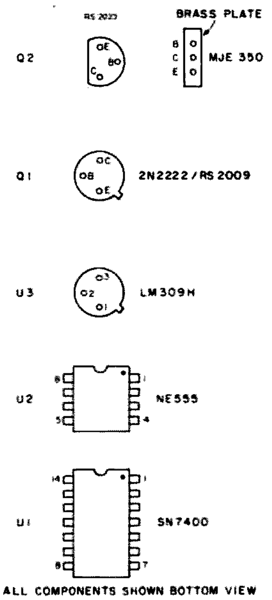

Fig. 5. Pin diagrams.

If it doesn't, recheck your connection to the transmitter. It may be that your polarities are backwards. With a voltmeter, you can measure the polarity of the voltage at the key terminals of the transmitter. Hook the negative to the transistor output of the sidetone and the positive key terminal to the ground of the sidetone. Check all of your solder joints once again and the polarity and positioning of the transistors and the ICs. If worse comes to worst, you can replace the ICs because of those handy sockets. It is unlikely that you should have problems still, if all of this checks out. Either way, a little bit of troubleshooting is always educational.

If you have a cathode-keyed transmitter, then you're in difficulty, because the PC board will not handle the cathode-keying circuit. You may have to do a little PC board designing yourself. Give it a try. It'll be very educational.

Now all that you need to do is fix up the circuit and install it into a nice cabinet. I found it a challenge to install the PC board, two switches, a transformer, and a speaker, all in the smallest cabinet that I could find. You will probably want to use a larger cabinet, especially if you intend to mount the volume and tone controls on the front panel. *73 Magazine* has published some articles which give tips on installing projects in cabinets. You might want to take a look at some of these articles to give you some ideas.

Once you've put it together, fire it up, plug it in, and give out a CQ. It'll be a pleasure to listen to yourself. Be careful. If you get too long-winded, you might even be accused of broadcasting. ■

Bibliography

***The Radio Amateur's Handbook*, American Radio Relay League, copyright 1974.**

***73 Magazine*, March, April, 1977.**

E. E. Buffington W4VGZ
2736 Woodbury Drive
Burlington NC 27215

The Tiny Tone Repeater Saver

—super-small tone burst system

As more and more two meter repeaters are coming "on line" every day, tone access should be considered as a way to cut down on the QRM. The schematic in Fig. 1 shows the circuitry required at the repeater end. The circuit, Fig. 2, is what you need at the user end.

Decoder and Logic

There are no frills in this circuit. The tone decoder is right out of the chip manufacturer's application notes, and the logic is our old friend, the R-S flip-flop.

A tone burst is sent at the beginning of each transmission. This tone burst is decoded by a phase locked loop IC type 567, resulting in pin 8 going low. At the same time, the COS (carrier operated switch) output from the repeater receiver will be high. Therefore, both pins 4 and 5 of the gate are high. This results in pin 11 tone COS being high. The tone pulse pin 4 will go low after one-third second with COS remaining high, resulting in the output tone COS also remaining high until input COS goes low. COS going high without the tone pulse being present will result in tone COS remaining low. Confusing? Sorry about that, but it works just the same!

Tone Encoder

The tone-encoder circuit was designed with low current drain CMOS. With circuit constants shown in Fig. 2, a one-third second burst is generated. The frequency is adjustable from 2500 to 4500 Hertz. The current required is only a few microamperes. Ultrasmall construction techniques can be followed, and you can fit this unit in even the most jam-packed rigs.

The supply voltage for the encoder comes on with the transmitter. The 1 uF capacitor charges through the 470k Ohm resistor so that after charging, the oscillator is disabled. Although not shown on the schematic, you may need a zener diode voltage regulator in order to have the frequency stability you need. Pots are needed to set the frequency and audio output level. This should not hinder making the encoder small, as very tiny pots are available at moderate cost. You may even be able to find them at hamfests at a super cheap price. The 1 uF capacitor should be tantalum for low leakage.

It might be a good idea if you had provision for switching this beeper out, if you work more than one repeater. It could get annoying to others. ■

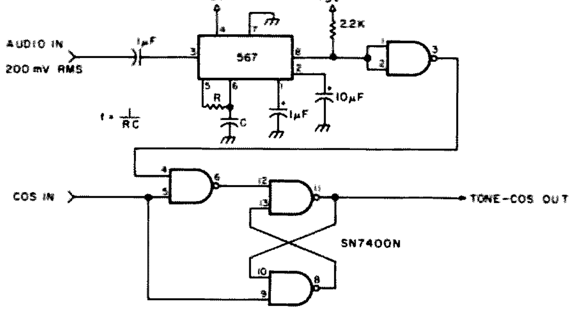

Fig. 1. Decoder and logic.

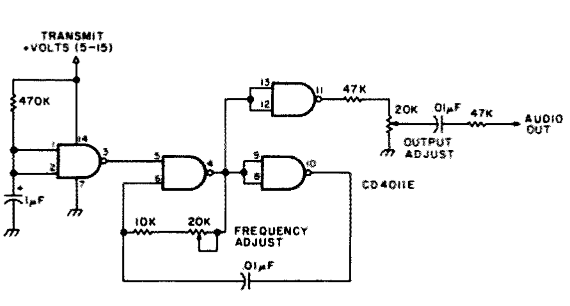

Fig. 2. Tone-burst oscillator.

Joseph Verzi, Jr. W4RYO
Box 102
Brucetown VA 22622

Dispense It Right!

—simple tips for wire and cord

If you have a rack for holding spools of wire, you should attach the gadgets explained in this article — or make those you can use for better wire handling.

Spools of five hundred feet of wire should have a 3/4" diameter conduit pipe through the bore to allow them to revolve better.

Smaller spools that have smaller center holes can be strung on 18-gauge wire across the rack. Special 1/4"-diameter holes for this purpose are drilled at each end to hold the wire.

Undamaged empty spools should be saved, reworked for holding wire ends, and painted. They can be used for winding from many short length spools to save space, for spooling up those hardware store hanks, as well as lacing and other cord.

For the convenience of holding wire ends when the metal spools are used, drill and deburr holes at opposite locations on the spool side near the rim. Wooden spools should have a small hole drilled on top of the rim and toward the outside at an angle. When spools cannot be drilled because they are filled with wire, look for a place to hammer a staple on the rim or solder a loop of wire on the outside near the rim and either push the wire through it or tie the end of it to the loop with cord. This will save the expense of using tape which could let loose or create a sticky situation with spaghetti and fine enameled wires.

Wire on the rack tends to unspool too much sometimes, wind around the bore shaft when you're pulling another gauge out, or the wire end springs back out of reach when cut. To solve these inconveniences, first run the conduit through the spool holes, as previously mentioned, to provide even support. The conduit may be used with a steel rod as the main support through the holes on the rack for high-efficiency dispensing. Make an economy feeder holder by tying twisted cotton cord across the rack below the spools and putting the wire through the twist so the cord will hold it. With this feeder holder cord, you can pull fine wires and lacing cord out to your measuring service.

If the metal spools squeal against the rack or each other upon unspooling wire, try larger diameter painted pie pans between the spools. Drill and deburr a center hole in the pie pans slightly larger than the conduit.

A more professional-looking type is a Lucite™ bracket with the wire pullout holes drilled in it, as shown in Fig. 1. Large holes are ½" diameter. For mounting, the hole on the left is used. The other three holes can be used for cable making by using one and pulling the wires through it. The 1/8"-diameter holes are for single wire holding service. The Bakelite™ lid knob on the right can be used for holding bunches of cut-to-length leads bent over it or as a wire-cutter holder while using the bracket guide. This guide can be painted with Lucite paint.

A hankmaker can be added to the frame by drilling two 1/2" holes vertically in the wire rack frame ten inches apart. In the top hole, put a 3/8" x 6"-long eyebolt by using two hex nuts and two washers. The eye should be vertical. In the lower hole, put a 1/2" x 6"-long bolt that had the hex sawed off. The sawed off place should be filed smooth. Twist one end of the wire on the eyebolt and then wind the wire around both of the posts by hand. When the wire is all wound, pull out some lacing cord from its reel and tie the wire in three separate, evenly spaced places. Now pull the wire hank off the bottom post first.

Another convenient item is the cord line installer made from a Lucite piece, as shown in Fig. 2. Three 1/2"-diameter holes are drilled across it. Add five yards of cotton cord by tying it to one end hole. While holding the Lucite piece (or with it in your pocket), climb the ladder or tree. When near the place you want, pull up enough cord and throw the Lucite piece over the limb or past the porch roof, for example. Wiggle and feed cord to help the Lucite piece to slide down.

Go down and tie the other end of the cord close to the wire end. Pull the Lucite piece line and slide the antenna en route.

The Lucite cord line installer can be tossed up one story to a roof or lowered to a window or to the ground from the roof or from inside.

Wind up the cord on the Lucite and keep it on a reversed bolt on the wire rack. Use a retaining wing nut. ■

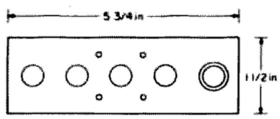

Fig. 1.

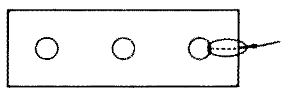

Fig. 2.

Rick Ferranti WA6NCX/1
14 Divinity Ave. #40
Cambridge MA 02138

Ham Radio Is NOT A Rich Man's Hobby

—another myth exploded

With the advent of Novice privileges for Technicians and the large influx of Novices from the CB ranks, quite a bit of older equipment is being sold at auctions, flea markets, and through used equipment dealers. The demand for a good stable receiver covering 80-10 meters and a moderate-power (90-150 Watt) CW transmitter has risen tremendously. Fortunately, there is a lot of this older equipment—gear built from pre-World War II to the mid-1960s—still around and available at reasonable prices for beginning hams. This article will explain some tips on obtaining a used transmitter or receiver, what to look for in the way of features and necessities, and how to get one of these older gems working like new or even better than new.

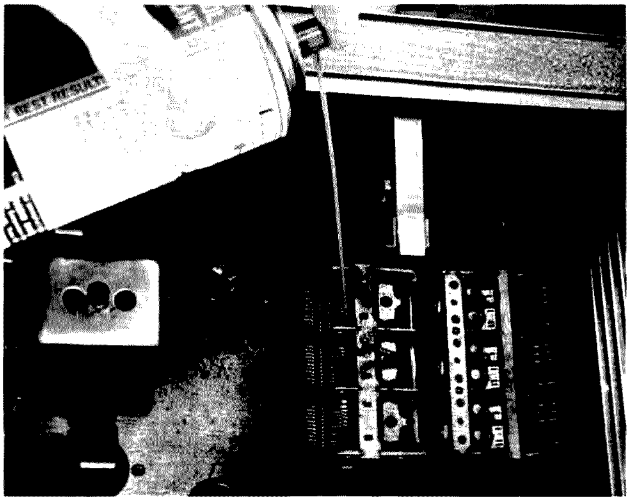

Photo A. Peering inside a 1939-vintage SX-24, note the 3-gang tuning capacitors. Spraying contact cleaner near the bearings reduces scratchiness as the rig is tuned.

Buying A Rig

You can begin to look for used equipment in a number of places, starting with the ads in this magazine. But there are advantages to snooping around in the local ham club's newsletter, a radio store's bulletin board, or attending flea markets or auctions. Last is the war surplus market, but I don't see much potential there, since all the equipment is either hopelessly outdated or so difficult to get running that the effort is not worth it. I've fiddled with everything from ARC-5s to TCS transmitters, and, although I learned a good deal about 1940 electronics (and made plenty of mistakes), the rigs are just not practical. Ever try to put a 28-volt relay-keyed MOPA clunker on 15 meter CW? Good luck!

Club bulletins and electronic store bulletin boards are about the best places to look for a good used transmitter or receiver. This way, if you see something you are interested in, you can call up the seller, go over and look at the equipment, and bargain over the price. I have two suggestions if you go this route: First, check out the original ads for the equipment in older ham magazines, if they're available. Old ads for the gear list its features and specifications; often there's a review of the rig in an issue of that same vintage. Along the same lines, *73 Magazine* for March, 1963, had a whole list of receivers from pre-WW II to 1963, tabulated with pictures and specs. It's still a good guide to older equipment, although the prices listed there are out of date. A second suggestion is to get another, more experienced, ham to go with you. Someone from your local ham club will be glad to come along.

Speaking of prices, how do you know if a rig is a good buy? Look at the commercial ads in recent ham magazines to get an idea of the maximum price you should pay. A good rule of thumb is that a commercial outlet's prices are about 20% higher for used equipment than the price you'd pay for something sold locally. Unless the transmitter or receiver is in perfect, never-been-used condition, never pay what those high-priced ads say it's worth!

So, commercial ham magazine ads are not very good places to get inexpen-

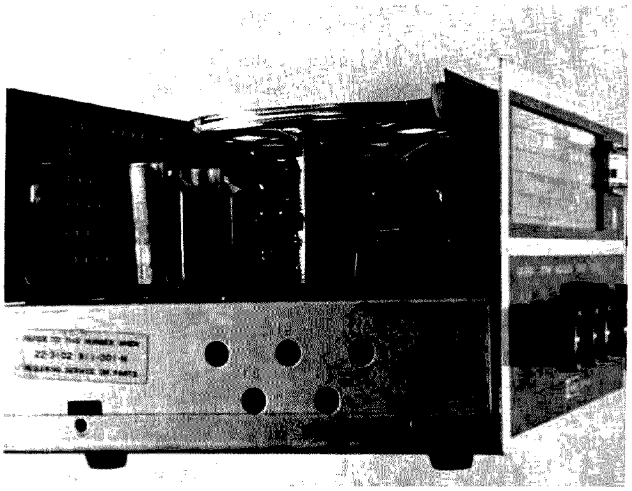

Photo B. Two gangs in a Star Roamer betray its lack of an rf stage.

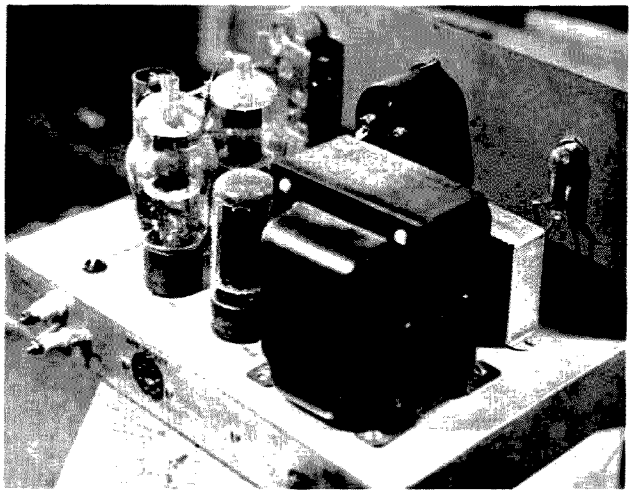

Photo D. These dusty insides are what you'll probably find when you open your purchase.

sive used equipment. Besides the fact that you never see what you're getting, you end up paying for the ad, for handling, and especially for shipping a piece of gear. Much of this older stuff is heavy, and shipping charges can add a considerable amount to the overall price you pay. Need I mention that this is another good reason not to buy "boat anchor" surplus?

What To Look For

If you've been patient enough to get this far, take a little extra time to look over the general appearance of the equipment before you buy it. If the rig was kit-built, be especially wary of poor craftsmanship; check to see if it has been wired neatly with shiny solder joints and good clean layout. On any piece of equipment, check the feel of the controls. A loose shaft or knob on a gain control or bandswitch is easy to fix, but, if the tuning dial feels rough or sloppy, stay away from it. Unless it's an obvious problem (e.g., the set screw is loose on the knob), tuning mechanisms are a real bear to repair.

Another thing you can try is to pick the rig up and shake it. Does anything sound loose or rattle around? Better make sure you know what it is (and where it went!) before you buy.

A transmitter should be checked for the following: Does it have its own power supply? What bands does it operate on? Does it use crystal or its own vfo frequency control? Much less important are features like an AM modulator—many of the smaller older transmitters had screen-grid modulators which were pretty inefficient and had poor audio quality. You'll be interested in CW, and AM is hard to find except on 160 meters and 10 meters. Try to get a manual with a schematic. If you can't find one, try writing Hobby Industries, Box Q864, Council Bluffs, Iowa 51501. They may have one available for your rig.

A receiver is a much more complex and critical component than the relatively simple CW transmitter. A rule of thumb is: Buy the best one you can possibly afford at the time. Nothing is worse than trying to fight the receiver as well as the QRM!

Your receiver choice should be governed by whether or not it has an rf stage first of all. You can see if it does by peering inside the cabinet and

Photo C. Globe Chief transmitter with cleaning materials.

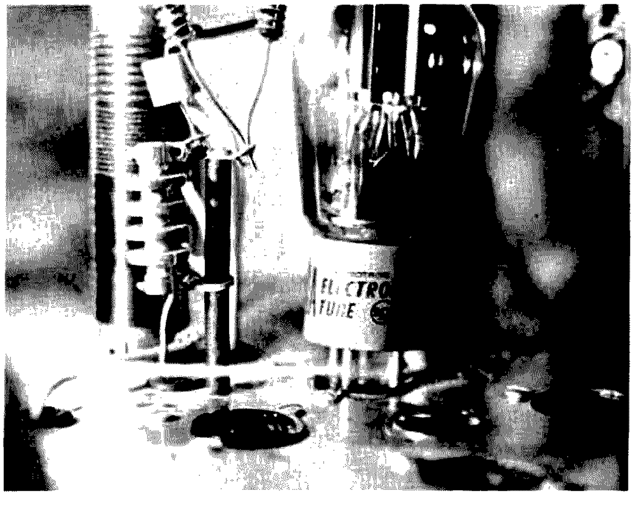

Photo E. Spray the tube and socket contacts and insert/remove the tube to clean mating contact surfaces.

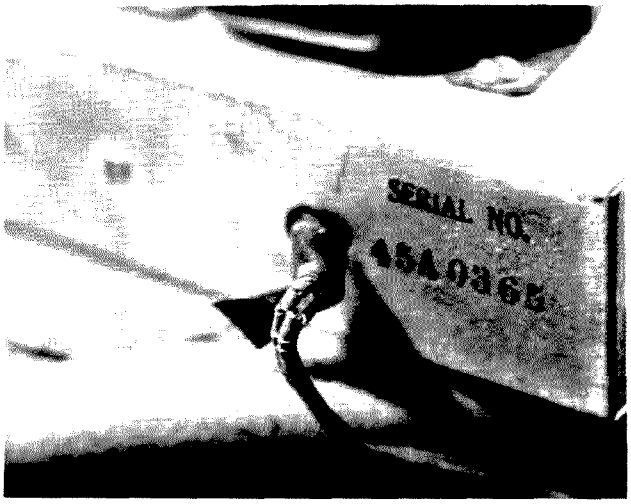

Photo F. Watch out for frayed linecords!

checking how many gangs (sets of plates) the tuning capacitor has. In Photo A, you can see three gangs on the main tuning cap and the bandspread capacitor of an SX-24. This makes one gang each for the rf stage, mixer, and oscillator.

Photo B shows the 2-gang setup of my Knight Kit Star Roamer; it has only a mixer and oscillator and no tuned rf stage. Without the rf amplifier, the receiver will lack sensitivity and be almost useless. Generally, only low-cost receivers lack the rf stage, being mainly intended for casual shortwave broadcast use. So stay away from receivers like the Star Roamer, the S-38 series, the SW-54, and portable multiband radios. These also lack the stability, bandspread, and selectivity needed for CW communications work.

Speaking of bandspread, does the receiver you're considering have a calibrated bandspread dial for the ham bands (in which case you'll need a crystal calibrator), or is the receiver a ham-band-only affair? Both general coverage and ham-band-only receivers have their advantages. With the latter, you get a better, more stable and generally accurate receiver specifically built for communications.

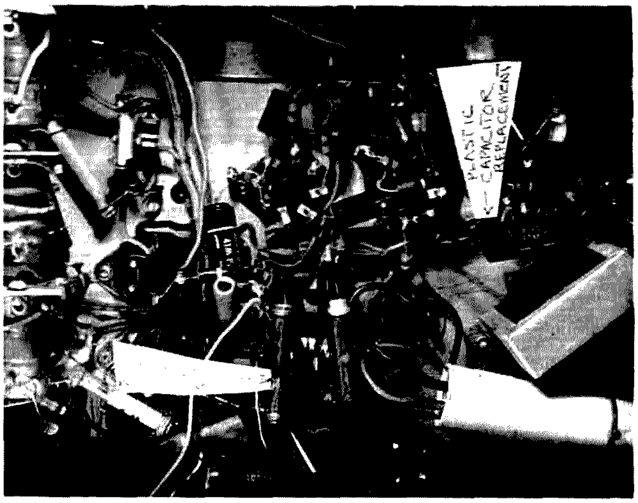

Photo G. Under the chassis of the SX-24, note the replacement filter cap held in place with plastic cable ties.

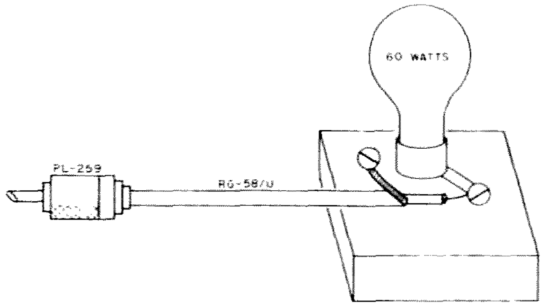

Fig. 1. Simple dummy load/indicator to tune up your transmitter.

Examples are the SX-101, the HQ-170, the SX-111, and others. The general-coverage rig, on the other hand, lets you snoop around bizarre CAP, MARS, military, commercial, and shortwave broadcasts, making things more interesting when hamming gets tiresome. But, I suggest that a first-time buyer invest in a good ham-band-only receiver so that he/she isn't frustrated by the more complicated tuning schemes and somewhat less performance per dollar of a general-coverage rig.

There are all kinds of tricks employed in good receivers to get the needed sharp selectivity—single crystal filters, multiple crystal lattice filters (rare on older rigs), double conversion to a 50 or 85 kHz i-f, mechanical filters, or even multiple stages at 455 kHz. If you can, listen to the receiver you're buying and try out the selectivity scheme. Does it help cut down adjacent signals when properly adjusted? More importantly, is the receiver stable enough to use all the selectivity it's capable of? Give an oldie at least 45 minutes to warm up and settle in to try this.

Receiver manuals, like transmitter manuals, are a necessity. If you can't get one with your purchase, you may find the old Rider's series manuals and schematics at a local library. Try advertising in *73*'s "Ham Help" and a local ham newsletter as well.

General Restoration Methods

If you've parted with your money and have excitedly brought your used receiver or transmitter home, you may have noticed a change in its appearance. Did the thing really have all that dust all over it? Was the bandswitch always so scratchy? Did the linecord already develop fraying? The receiver sure didn't sound so dead on 15 and 10 meters when you bought it just hours ago!

Take heart. This is part of the fun of buying a used piece of equipment. To get the thing working like new again, you'll need a few simple tools and parts. The first thing to emphasize is that cleanliness is the key to any rig's continued reliable operation. Besides, it makes your purchase much more attractive to look at and operate. More importantly, dust and gonk inside a piece of equipment form low-resistance paths from high-impedance circuits to ground. This can make a considerable difference in a receiver. In a transmitter, dust can cause arcing, particularly in the final tuning caps.

Photo C shows my arsenal of cleaning agents to help remove much of the years' accumulation of grime. On the outside, you can begin by removing all

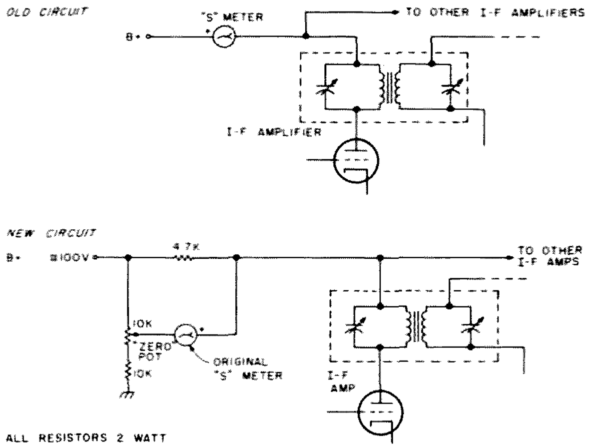

Fig. 2. Improved S-meter circuit for older receivers.

the knobs (make a chart of where the pointers lined up on their shafts). Spray down the front, sides, top, and bottom with a mild detergent cleaner and wipe it down carefully with a paper towel. Be sure to get in the crevices around meter mounts and dial escutcheons. While you're poking around, see if you can take the whole cabinet off the chassis, so you can concentrate on each separately.

Many of these older rigs had wrinkle finishes which are very difficult to clean after dirt has worked into the crevices. The best cure (short of stripping it and repainting the whole darn thing) is to scrub the cabinet with a brush and a bucket of soapy water, hose it off, and then let it sit in the sun to dry. To restore the deep texture of the wrinkle finish, mix four parts of turpentine with one part baby oil and liberally apply this goop all over the painted surfaces. Then wipe off the excess with a clean, dry cloth, and set it out in the sun to heat up and dry off. The turpentine dilutes the oil enough so the panels or cabinet won't feel gooey, but the oil keeps the finish fresh. In addition, you'll find that the panel markings show up bright and shiny after being rubbed with the mixture. If there were a few spots where the paint was chipped, you can touch up small areas with ordinary matching paint after the dirt is off the cabinet. Let the paint dry, then apply the baby-oil treatment. You'll think you bought a new rig!

Knobs can be cleaned with a toothbrush and soapy water. Don't use harsh detergent on them; I've seen Bakelite knobs become etched by some cleaners. Polish them dry with a soft cloth.

On both transmitters and receivers, several improvements can be made while the chassis is removed from the cabinet. Remove all the tubes and dial lamps (make a chart of what went where), and wipe the chassis down with paper towels dampened with spray cleaner. Clean the dust off each tube and polish with a soft cloth. Dust inhibits a tube's ability to radiate heat and shortens its life (Photo D). Spray the tube and socket with contact cleaner, and, while the two are wet, insert and remove the tube from the socket to clean their mating surfaces.

Inspect your rig's linecord and watch out for conditions like Photo F. Replace this whole cord from the plug to where it connects inside the chassis. Also, check the fuseholder and fuse if

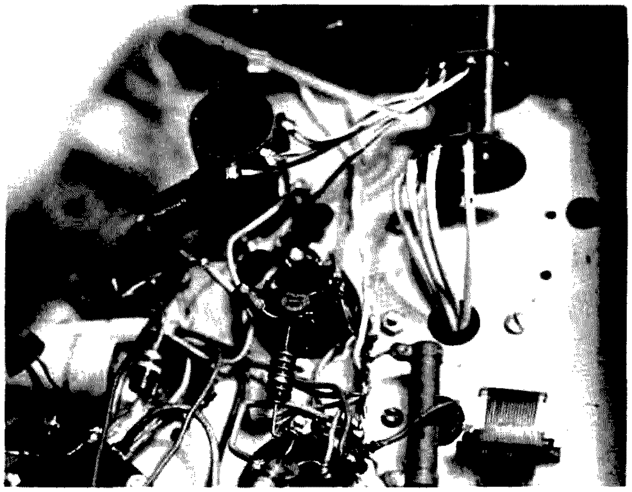

Photo H. Inundate bandswitches with contact cleaner and rotate.

there is one. If it's burned out, be sure to replace it with the same kind and rating and be particularly cautious when looking for faults which may have caused its demise.

Another problem common to old equipment is a bad electrolytic filter capacitor. Sometimes you can pinpoint this problem because the fuse blows only after the rectifier tube warms up and begins to conduct. If you can't find an exact replacement, you can mount a new insulated filter cap under the chassis with plastic cable ties, leaving the old one still in place (but disconnected) so as not to disturb your receiver's inner aesthetics. An example can be seen in the lower right corner of Photo G.

One very worthwhile thing you can do to improve any older gear's operation is to spray every switch, control, and socket with contact cleaner. Be particularly generous with your squirting around bandswitches, and rotate these many times while wet to work the tarnish off the contacts (Photo H). Shoot the juice inside gain controls and rotate them; a long flexible nozzle tube helps to pinpoint the spray.

Transmitter Fix-Ups

After following the

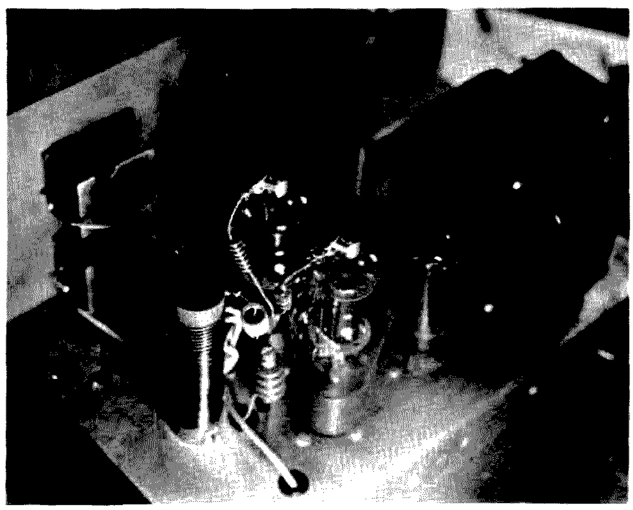

Photo I. Shiny innards of a clean Globe Chief.

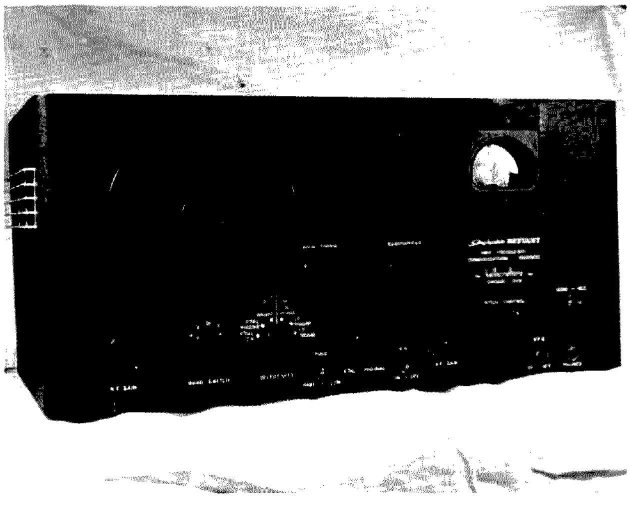

Photo J. A good budget station. Restored SX-24.

above suggestions, your transmitter should look clean inside and out. Be certain to thoroughly clean the final tuning and loading capacitors, as dust will make them arc.

I've seen quite a few suggestions published which say that the only way to test a transmitter is with a mechanically complicated resistor bank and a directional wattmeter. Those things may be nice for VHF or engineering use, but I've learned all I need to know from a simple light bulb. Get yourself a ceramic light socket, attach a piece of RG-58/U cable with connector to match your transmitter, and screw in a 60-Watt light bulb. See Fig. 1. A 75- to 90-Watt input (plate volts times Amps on the finals) should light the thing up to almost full brilliance and makes a dandy dummy load.

This simple device can also serve as a modulation indicator to check if the AM portion of the transmitter is working—i.e., you should get a variation in brilliance when you talk into the mike. And, you'll also have a rough idea of the rig's output power. If it takes 60 Watts of 60 Hz power to light the bulb, it'll take about the same power at rf frequencies.

One warning you should already know about: Even a low-power amateur transmitter has dangerously high voltages present, and some rigs have lethal plate voltages present at all times on the final's plate caps. If you must poke around and check voltages in your transmitter while it is turned on, always keep one hand in your pocket and be very careful.

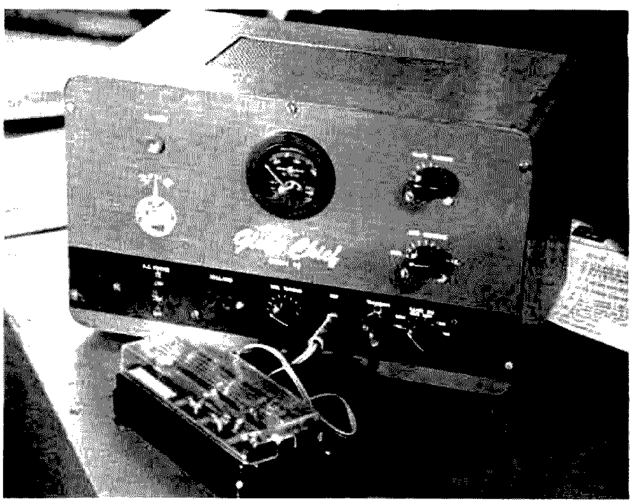

Photo K. Globe chief ready to go.

By the way, an excellent way to check those nice shiny tubes in a transmitter—or receiver, for that matter—is by substituting new tubes of the same type for the old ones. A great source of good vintage unused tubes (many of them boxed from 40 years ago!) is Fair Radio Sales, Box 1105, Lima, Ohio 45802. Write for their free catalog. If your tube needs aren't listed there, write for a specific bottle, and chances are they'll have it at low cost.

Receiver Notes

After you clean your receiver inside and out and check the tubes, you may find that it isn't quite as perky as you hoped, particularly on frequencies above 10 MHz. The single most effective cure for a weak old receiver is wholesale replacement of the drippy paper-wax bypass capacitors which were generously used in rigs from the 1930s to the 1960s. You may have noticed a yellow gonk deposited on the bottom plate of the cabinet where some of these miserable things have leaked out their innards. Such physical leakages are accompanied by electrical leakage, and the bypass caps begin to seriously affect receiver performance.

Make a list of these caps as they appear in your receiver and go down to a surplus outlet to purchase sealed-in-plastic versions of the same thing. The values aren't critical—a .02 uF unit can easily be substituted for a .022 uF cap or a .05 uF for a .047 uF value. Make sure the voltage ratings of the capacitors are equal to or greater than the originals. In Photo G, you'll notice several of these replacements in the SX-24; one of them is clearly marked. There is a stripe or band around one end of the case on both the original and the replacement; orient these the same way when installing. The band marks the side which should go closer to ground, since it's connected to the outermost foil wrap inside the component. So be careful and do your replacing one at a time, also being sure to locate the cap in the same location as the original. Sometimes they were tied across tube sockets and served a double purpose in shielding inputs from outputs.

You can use ceramic disc capacitors to replace the older tubular models, but I haven't tried it for two reasons: The disc capacitors are generally more expensive than the sealed tubulars (an important factor when you have to replace 18 of the darn things), and they may not be suitable for the shielding purpose mentioned above.

After witnessing Gary WB6WNI's patient replacing of these capacitors in an NC-183, the audio quality went from zero-fi to hi-fi, and the 10 meter performance went from nonexistent to quite acceptable. I've done this same replacement procedure on many other rigs from an SX-71 to an SP-100 and it's worth every bit of your time to do the same. The performance improvement is so remarkable that I'm led to believe that the receivers work better now than when they were new (although I wasn't around when most of them were new).

In pre-WW II receivers, you may find strange-

looking ceramic tubes with wires on each end, like the ones shown in Photo G. These were pretty miserable excuses for resistors, so, if your receiver is still having problems, you might check to see if their values have changed over the years. If so, replace them with 2-Watt carbon ones.

Troubleshooting for other faulty components is greatly aided by a manual or schematic, but if you can't get one, don't despair. Put one hand in your pocket and probe voltages with a multimeter. A guide to what kinds of readings to expect is found in an old ARRL *Handbook* or a tube manual, since tube base diagrams are given there. You should find low ac filament voltages on the appropriate pins, high dc voltage on the screens and plates, and relatively little or no dc volts on the grids and cathodes. This should help in finding faults without the benefit of a manual.

A mechanical improvement sometimes necessary on an old receiver is a dial restringing job. Use true radio dial string and be 100% certain that you make a diagram of how the string originally went on before you remove the old one. Otherwise, the resultant futile efforts to make the dial pointer and the tuning knob move at one and the same time will drive you nuts.

Most of these old receivers have held their alignment pretty well over the years. If you must tweak, touch up the adjustments, but don't overdo it! Be sure you know which trimmer changes what for which band; they're not necessarily laid out in a logical pattern. Here's one tip for if the receiver is way out of alignment: The local oscillator usually operates 455 kHz higher in frequency than the dial marking, so listen for it on another well-calibrated receiver and get it aligned first. Then follow through with adjustments to the mixer and rf amplifier, retweaking everything several times for final alignment.

The bfo can be aligned by disconnecting the receiver's antenna and turning the bfo on. Tune its adjustment slug so that the "swish" seems to be centered in the narrowest passband of the receiver (the lowest noise pitch). Any front panel bfo control should be set to midrange for this adjustment.

Some of these older receivers had ridiculous S-meter circuits which glumly responded by measuring the plate current to the i-f amplifiers. I prefer nice, bouncy, generous operation; it can be easily added with a couple of resistors and a potentiometer, as in Fig. 2. Values are shown for the rather low plate voltage of 100 V; you should increase them proportionately to whatever voltage you find in your receiver. Use the original meter, of course, and zero it with the 10k pot. You may have to mess with the values to get the kind of operation you want, and there's nothing critical here.

Station Notes

Now that you've got a good, clean, peak-performing transmitter and receiver (and had fun fixing them up while saving money), you'll need an antenna switch and some way to mute the receiver. Most of these receivers have "mute" terminals on the back panel; when the terminals are shorted, the receiver operates. Get a good Drake or Johnson low-pass filter—the CB types won't take the power and aren't designed for 80-10 meter operation.

Photo L. Baby-oil treatment restores the wrinkle finish of this beautiful old 1937-vintage SP-100.

The FCC requires you to have some kind of frequency standard independent of the means used to control your transmitter's frequency. A 100 kHz crystal calibrator works fine for this and will also give you accurate calibration points to keep your station on frequency.

Many older transmitters will easily load into dipoles or verticals—some have no problems with random wires—so antennas are easy to make. Don't forget that the best station is useless without a good antenna. When you've got the antenna set up, get a ham friend a couple of miles away to listen to your signal before you really get going. He can check for chirps and harmonics and report back on 10 meters or 2 meters voice if he's got a higher class license.

I hope this article helps you select, clean up, and improve the performance of any older equipment you may be interested in. I've had a great time restoring old machines and using them in my station.

Thanks to Gerry W6NIR, Fred K6YT, Mike G3PPE/VE7, and Dave WA6AWZ for their help and inspiration.■

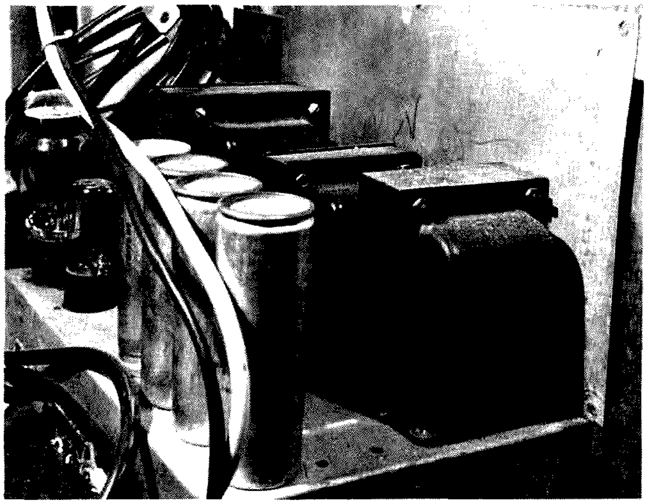
Photo M. Some old receivers like the Hammarlund had separate power supplies. Be sure one is included with your purchase.

Kenneth R. Fletcher
1833 Hope Street
Klammath Falls OR 97601

The Toggled 22

—simplified programming for your IC-22S

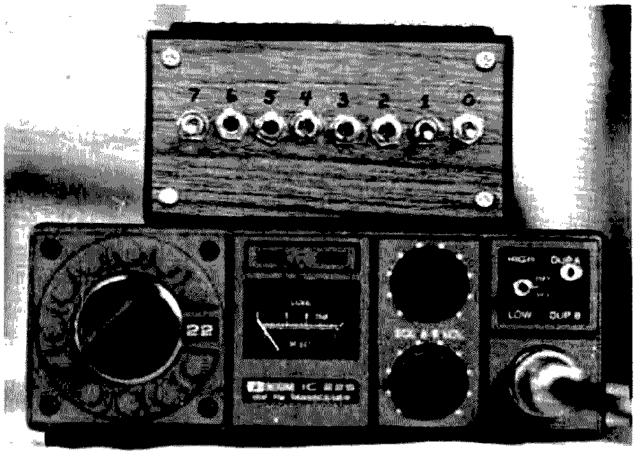

The finished product.

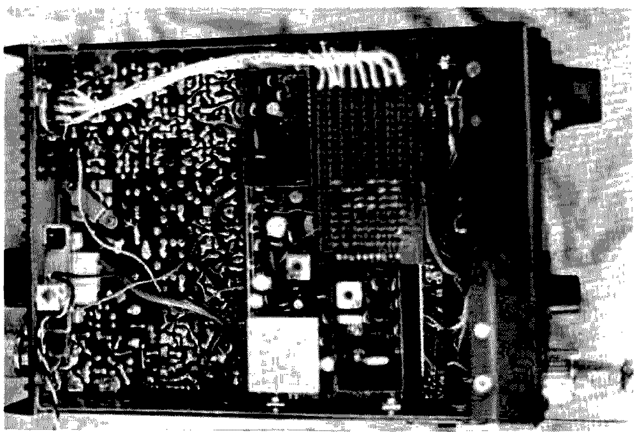

This shows the wiring inside the Icom 22S to connect the programmer.

Since the arrival of the Icom 22S on the market, many people have thought of different ways to rig this fine piece of equipment to cover the entire 146-148 MHz band with the flick of a single switch. I really have no idea how to accomplish this feat with a single switch, but with eight, it's a cinch!

The diode matrix to the Icom 22S is merely a PROM (programmable read only memory). By placing the diodes in the various positions in the diode matrix, you are essentially storing an 8-bit binary word in one of the 22 addressable memories of the PROM. With the use of eight SPST toggle switches, it is possible to put any binary code into the matrix that you wish. This gives you access to the entire band at the touch of a finger. On top of all this, Icom has placed a 9-pin accessory outlet on the rear panel of the unit that will facilitate easy coupling of the programmer to your rig.

Sound too good to be true? Well, there is a catch to it. You must have, along with the programmer, the programmer coding chart provided with the article or the diode placement chart that comes with the transceiver. The diode placement chart and the addendum provided by Icom have quite a few errors and should be cross-checked. I consider having to carry the programmer coding chart a small inconvenience but worth the effort.

Now let's consider the construction. You need to purchase 8 miniature SPST toggle switches, a small chassis to which the switches can be mounted in a straight line, and some #26 stranded hookup wire. Total cost is about $12, not including your time spent in construction.

The circuit diagram of Fig. 1 shows how simple the programmer actually is. Mount the eight switches in the chassis all in a horizontal straight line so that they are easy to see and use. Mount 8 diodes in a line on a small piece of perfboard. Solder a 12" piece of hookup wire to the cathode of each diode (banded end). Solder one side of all the switches together to form a common bus. Connect the other side of each switch to the anode of the diodes — one diode for each switch.

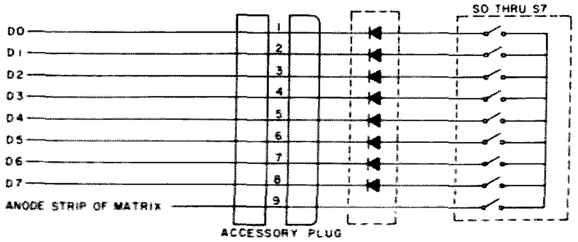

Fig. 1. Circuit diagram for external programmer.

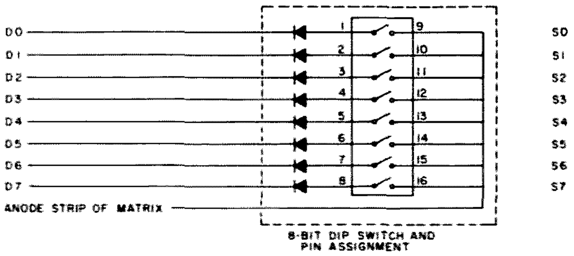

Fig. 2. Circuit diagram for 8-bit DIP switch programmer.

Now connect the common side of the switches to pin #9 of the accessory plug provided by Icom.

We now must define the switches by position. As you are facing the front of the chassis, the switch on the far left is now S7, the next is S6, and so forth. The switch on the far right is SØ. Looking at the programmer coding chart, the numbers at the top of the columns correspond to the switch numbers. Where there is a "1" in a switch position, that switch is turned on. When there is a "0", that switch is turned off. Now connect S7 to pin #8 of the accessory plug, S6 to pin #7, and so forth, until you have connected SØ to pin #1. The programmer is finished, but you still have a little work to do.

You- must now open the transceiver and wire the diode matrix as follows. First, notice that there is a ground wire connected to pin #8 of the accessory socket. Pins 8 and 1 are connected by a .01 uF capacitor, and there is a wire connected to pin #1. Desolder the ground wire on pin #8 and remove it. Desolder the capacitor from pins 8 and 1 and remove it carefully. Solder one side of the capacitor to the point on the PC board where the ground wire was connected from pin #8. Remove the wire from pin #1, and connect it to the other side of the capacitor. Make sure all connections have been removed from the accessory socket.

Now solder 8 wires of #26 AWG stranded wire (about 6" long) into the holes of channel 22 where the cathodes of the diodes would normally go. Solder one wire to the anode strip of channel 22. Bundle-tie the wires together and run them in the direction of the accessory socket on the back panel of the transceiver. Connect the wire coming from the anode strip to pin #9. Now connect the wire from diode position D7 to pin #8 of the socket. Connect the rest of the wires in this manner — D6 to pin 7, and so forth, until DØ is connected to pin #1.

Check your wiring very carefully to see that all wiring is correct. Connect the programmer to your transceiver, and you are ready to use any of the 399 frequency combinations of Icom 22S.

As an added bonus, this design will also apply if you wish to use an 8-bit DIP switch instead of the toggle switches. The DIP switch can be put on a small perfboard with the diodes and placed inside the transceiver to allow easy programming of any frequency without soldering each time. This would be a good circuit configuration for those of you who have used the accessory plug for an autopatch encoder. ■

Frequency	Switch code 76543210				
		.655	10010111	.330	11000100
		.670	10011000	.345	11000101
146.010	01101100	.685	10011001	.360	11000110
.025	01101101	.700	10011010	.375	11000111
.040	01101110	.715	10011011	.390	11001000
.055	01101111	.730	10011100	.405	11001001
.070	01110000	.745	10011101	.420	11001010
.085	01110001	.760	10011110	.435	11001011
.100	01110010	.775	10011111	.450	11001100
.115	01110011	.790	10100000	.465	11001101
.130	01110100	.805	10100001	.480	11001110
.145	01110101	.820	10100010	.495	11001111
.160	01110110	.835	10100011	.510	11010000
.175	01110111	.850	10100100	.525	11010001
.190	01111000	.865	10100101	.540	11010010
.205	01111001	.880	10100110	.555	11010011
.220	01111010	.895	10100111	.570	11010100
.235	01111011	.910	10101000	.585	11010101
.250	01111100	.925	10101001	.600	11010110
.265	01111101	.940	10101010	.615	11010111
.280	01111110	.955	10101011	.630	11011000
.295	01111111	.970	10101100	.645	11011001
.310	10000000	.985	10101101	.660	11011010
.325	10000001	147.000	10101110	.675	11011011
.340	10000010	.015	10101111	.690	11011100
.355	10000011	.030	10110000	.705	11011101
.370	10000100	.045	10110001	.720	11011110
.385	10000101	.060	10110010	.735	11011111
.400	10000110	.075	10110011	.750	11100000
.415	10000111	.090	10110100	.765	11100001
.430	10001000	.105	10110101	.780	11100010
.445	10001001	.120	10110110	.795	11100011
.460	10001010	.135	10110111	.810	11100100
.475	10001011	.150	10111000	.825	11100101
.490	10001100	.165	10111001	.840	11100110
.505	10001101	.180	10111010	.855	11100111
.520	10001110	.195	10111011	.870	11101000
.535	10001111	.210	10111100	.885	11101001
.550	10010000	.225	10111101	.900	11101010
.565	10010001	.240	10111110	.915	11101011
.580	10010010	.255	10111111	.930	11101100
.595	10010011	.270	11000000	.945	11101101
.610	10010100	.285	11000001	.960	11101110
.625	10010101	.300	11000010	.975	11101111
.640	10010110	.315	11000011	.990	11110000

Table 1. Frequency codes for the Icom 22S encoder. Code 1 = switch ON; Code 0 = switch OFF.

Jim Barnett W6JB
1163 Calle Las Trancas
Thousand Oaks CA 91360

Custom-Make Your Key Paddle

—the iambic Zephyr

The days of the CW signature are almost gone with the current use of electronic keyers. The personalized penmanship-like characteristics of a CW operator's fist are being replaced by machine-like precision sending with electronic keyers. The ability to pick out one station in QRM situations by tuning one's ear to a style of fist is becoming obsolete. Narrow bandwidth filters, binaural processing, and CW regenerators are offsetting the old-time ear puckering and fist-signature CW reception techniques. The electronic keyers are removing the accent from former straight key, sideswiper, and bug operators and are making it easier to copy CW. The "chicken scratch" fist is disappearing, and the code speed copying ability of the average CW operator has improved because of the increased legibility resulting from the use of electronic keyers.

The marketplace is flooded with many brands of electronic keyers with features such as dot or dash memory, weighting, iambic operation, and built-in sidetones. Some keyers have the paddle mechanism contained in the chassis where the electronics are. Some keyers have a three-wire cable going from the electronic chassis to the paddle mechanism. The latter method has the advantage of allowing more elbow room for the CW operator and eliminating the awkward situation of a bulky keyer chassis occupying valuable tabletop real estate.

There have been many magazine articles on homemade electronic keyers which can be built easily and inexpensively. But coming up with the paddle mechanism has always been left up to the reader. One can buy a paddle mechanism for as little as ten dollars, but can easily pay thirty dollars for a high quality one. It can be expensive to buy a nonplastic, rugged, smooth-operating, adjustable paddle mechanism on a heavy base with rubber feet.

This article describes the modification of a Vibroplex Zephyr semiautomatic key

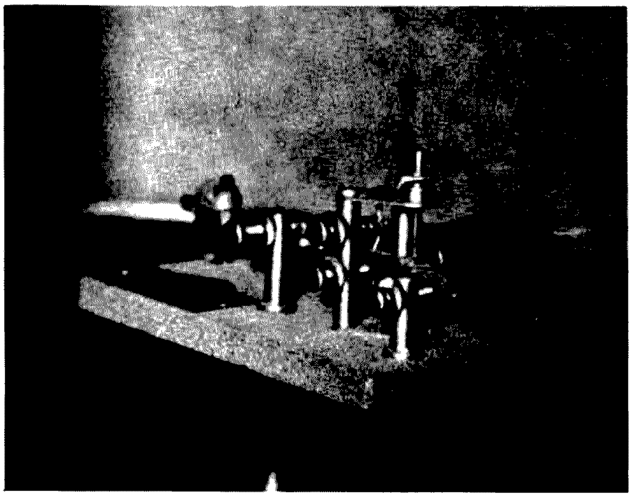

Fig. 1. Before — a Vibroplex Zephyr semiautomatic key.

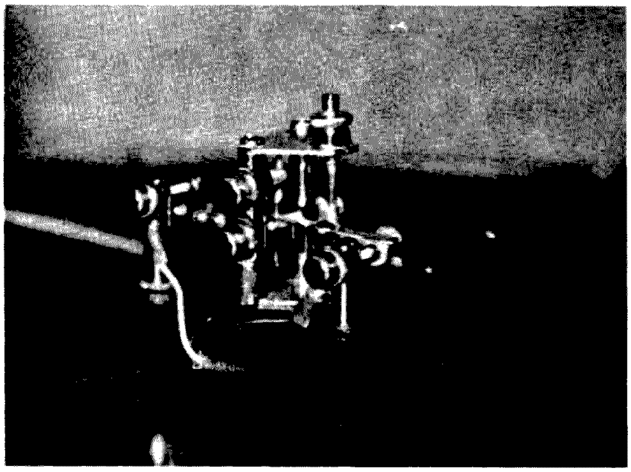

Fig. 2. After — a good-looking electronic keyer paddle mechanism.

(see Fig. 1) to an expensive-looking electronic keyer mechanism (see Fig. 2). It cost me nothing to make this modification, and the end product is quite comparable in looks and performance to the most expensive electronic keyer paddles commercially available.

The only special tools required are a vice, hacksaw, and a file to cut the Zephyr down to size. The Zephyr is disassembled from its base and the chrome parts are restored to their original brilliance with automotive chrome polish. The base is clamped into a vice and hacksawed, using the vice as a straightedge to get a straight and square cut. A file is used to clean up the edges, and the base may be painted with a color to match ham shack gear.

The pendulum is cut down, and the existing hardware is moved around (see Fig. 2) to convert to the electronic keyer paddle configuration. Spade lugs can be used to snap onto the convenient screws on the paddle mechanism for connection to a three-wire system (see Fig. 3). The dot post as well as the dash post must be insulated electrically from the base using the existing hardware.

It took about four hours to modify the Vibroplex Zephyr and would probably take about the same time to modify other kinds of bugs. Visitors to the shack will be impressed with the good looks and low cost of this professional-looking shack accessory. ■

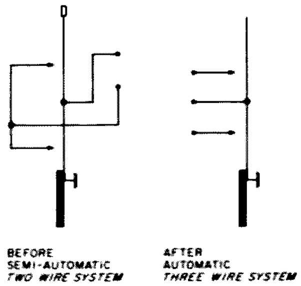

Fig. 3.

Sam Miller WB8TXG
4893 Timbercrest Dr.
Canfield OH 44406

Don't Let Your Battery Die

—*extend its life with this simple timer*

After having several batteries go dead due to the simple fact that I forgot to turn off a battery-powered CW filter after use, I decided to look around for a cheap circuit that would turn the unit off in case I forgot to.

The circuit is a basic NE555 timer circuit with the addition of a reed switch. I was unable to find a relay with a low current consumption, and was able to use the reed switch in its place. The total cost of the entire project was less than $4.00 using all new parts.

The reed switch shuts all power off after the timing period of the NE555 timer. The timing period may be adjusted by varying the values of R1 and C1. With the values shown, a period of between 9 and 12 minutes is obtained.

The push-button switches are used to reset the timer and pull in the reed switch initially, to provide power for start-up. I used two switches, but a single DPST normally open push-button switch could be used. The only disadvantage of using one switch is that there is no way to shut the unit off before the timing period is up. The switch connected to pin two of the NE555 will shut down operation if pushed before the timing period is up. An SPST switch could be placed in the battery line to provide this feature if so desired.

The reed switch is a General Electric number GE-X7 Experimenter with between 7,000 and 10,000 turns of number 36 magnet wire wound onto the form supplied with the switch. I placed the form in a variable speed drill to turn the wire onto the form. I didn't count the turns, just filled the form full.

With the CW filter on, the circuit draws 22 mA. This should provide a normal battery life. Whatever is connected to point "A" should not draw more than 250 mA. ■

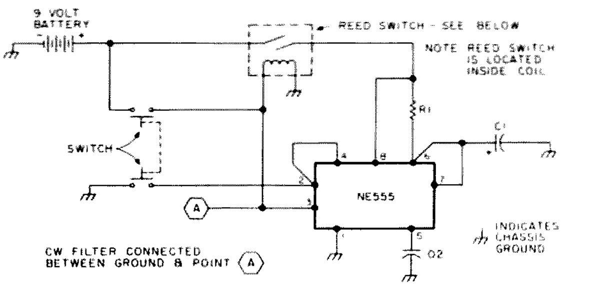

Fig. 1. R1 — 5 meg. C1 — 50 uF electrolytic. Switch — either 1 n.o. DPST push-button or 2 n.o. SPST push-buttons. Reed switch — #GE-X7 Experimenter line by General Electric with 7,000 to 10,000 turns #36 enamel covered magnet wire around switch form.

Fred Goldstein K1IO
22 Chiswick Rd.
Boston MA 02146

New Life For Double Sideband?

—*awake, ye pioneers, and get cracking*

In the 1930s, when a ham spoke of "radiotelephone," he meant only one mode — good, old-fashioned, full-carrier AM. When hams (or FCC exams) discussed alternate types of modulation, the choice was between grid and plate modulation; FM and SSB were laboratory esoterica for the most part confined to the future.

Since then, most amateurs have learned the folly of full-carrier AM. Single sideband predominates on the low bands, while FM is the workhorse of VHF. Few voice operators have had any experience with another mode that combines the best of FM and SSB with the simplicity of "Ancient Modulation."

What's AM, Anyway?

The popular view of modulation is fraught with misconceptions.[1] Many hams still believe that "amplitude modulation" is accomplished by varying the strength of a "carrier wave" in step with the modulating signal. This is erroneous; by definition, the carrier of an AM signal is not changed by the modulating process and carries no intelligence. In fact, it doesn't carry anything; it just sits there. Audio and rf are mixed in the modulated stage of an AM transmitter, producing sum and difference frequencies which are called sidebands.

The sum and difference products are redundant, and the full modulating signal can be found in either one of the two sidebands. In SSB transmitters, the carrier and one sideband are removed. This is perfectly sufficient, given the proper reception techniques.

An AM detector, whether a simple diode or an SSB product detector, is nothing but a mixer. The carrier frequency is mixed with the sidebands (one or both), producing difference products which duplicate the original modulating waveform. If the carrier is not transmitted, a beat frequency oscillator (bfo) fills its role within the receiver, mixing with the SSB signal. See Fig. 1.

The nominal signal bandwidth of an SSB signal is that of the modulation. Since the usual voice spectrum is from 300 to 3000 Hz, an SSB signal is 2.7 kHz wide. An AM signal is twice as wide as the maximum modulating frequency, so voice AM uses 6 kHz. This is one of the most important reasons why SSB has supplanted AM on the crowded HF bands.

AM has another big problem — heterodynes. Since AM is just mixing, two nearby carriers can mix and produce audible difference products. CBers are today plagued by heterodynes, as were hams twenty years ago.

Perhaps AM's biggest disadvantage is the energy wasted in the carrier, which must always be twice as powerful as both sidebands together. But it also has one big advantage, which few hams (or anyone else, for that matter) make use of.

Redundancy — FM's Secret Weapon

"Frequency modulation" is often believed to be a process of shifting the carrier's frequency in step with the modulation. This isn't any truer than the carrier-strength theory of AM discussed above. In FM, the carrier sits on a single frequency, but it is surrounded by multiple sidebands, whose phase relationships give the appearance of varying frequency. At one point in the modulating cycle, the upper sidebands will tend to cancel, while the lower sidebands tend to reinforce one another; at the other half of the cycle, the phases switch position. The amplitude of the carrier does vary; a constant amount of power is divided between the carrier and the sidebands.

FM is capable of better noise rejection than AM and has the "capture effect" — a stronger signal will completely obliterate (capture) a weaker signal on the same frequency. While FM's noise resistance is a product of the phase relationships, the rest of its benefits are primarily due to redundancy. The wider the FM signal, the more sidebands; the signal-to-noise ratio rises with bandwidth. Unfortunately, the wider receiver bandwidth needed for

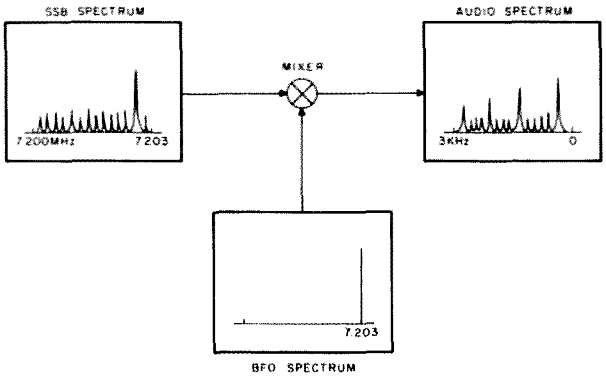

Fig. 1. SSB spectrum is mixed with a carrier in the detector; the output is the difference. In an AM system, the bfo is not needed, since the transmitted carrier is mixed with the sideband(s).

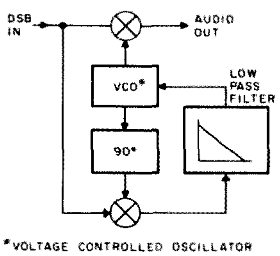

Fig. 2. PLL detector for DSB.

wideband FM admits more noise, so FM requires a stronger signal than SSB to overcome receiver noise.

An FM detector always takes advantage of redundancy. But regular AM has some redundancy, too — two complete sidebands. How can we put this to good use? A diode detector won't suffice, since it mixes all signals indiscriminately. A product detector only works with SSB. To get the most from AM, a synchronous detector is necessary. And a good synchronous detector doesn't require the presence of a carrier between the two sidebands. It enables us to use double sideband, a mode almost forgotten by history.

A Quick History of DSB

Double sideband without carrier (DSB) was developed in the mid-1950s. General Electric developed military communications gear using DSB, but the Collins Radio Company, with its SSB gear, beat GE for the pace-setting military contracts. Some have attributed this to better lobbying on Collins' part, although their equipment certainly can't be slighted for quality. Since then, DSB has been mostly ignored. A few ham DSB transmitters came out around 1960, but they were intended for hams who couldn't afford SSB; the other guy wasn't supposed to notice the "wrong" sideband!

Unlike SSB, DSB cannot be received on an AM/CW receiver. A synchronous detector is necessary. The only way to receive DSB on an SSB receiver is to filter out one sideband. A synchronous detector isn't a simple device. It revolves around a phase locked loop (PLL). How many hams knew about PLLs in 1956? The new PLL chips aren't designed for DSB, but they can be used in DSB receivers. An optimal DSB detector, sometimes called biaural or bisynchronous, requires 20 tubes or so, but it becomes quite manageable with ICs. A single chip could be built for it, but it hasn't been yet.

Synchronous Detection

The basic difficulty with DSB is that the bfo must be exactly in phase with the carrier used to generate the sidebands. Absolutely perfect stability is necessary, unless phase locking is used. Happily, phase locking isn't tough to achieve. So, by injecting a phase locked bfo into a product detector, DSB can be received. The basic DSB detector in Fig. 2 just keeps the bfo in phase. The result of this is a system that is at least as efficient as SSB and doesn't require any expensive crystal filters.

A true biaural detector makes full use of redundancy. Its operation is basically simple. If a signal isn't simultaneously present in both sidebands, it's spurious, so reject it. This may sound like a nifty trick to pull out of a hat, but it was described in 1956 by John P. Costas W2CRR and, later, in a 1966 *73* article — with lots of tubes!

Fig. 3 is a block diagram of the biaural detector. It has two parallel signal paths — the I channel and the Q channel. The incoming DSB signal is fed into two product detectors (balanced mixers). The bfo is fed directly into the I channel. It is shifted 90° (by a resistor and capacitor) before being fed into the Q channel. An adequate 90° phase shift is easy to produce over a narrow range of frequencies (less than an octave at a time), and it requires no adjustments if the detector is used across an entire ham band in a direct-conversion (synchrodyne) receiver.

The I (in-phase) channel will detect everything present in the input, including both the desired DSB signal and any unwanted signals and noise. But the Q (quadrature) channel won't. If you combine a DSB signal with its carrier shifted 90° (in quadrature), you'll get phase modulation, not the original AM. That's how many FM transmitters work. But, since phase modulation (practically the same as FM) can't be heard on an AM detector, the Q channel will not detect the desired DSB signal. It will hear everything but the desired signal. So a detector just has to shift the Q channel audio 90° (with no great precision; you don't need the expensive shift networks used in phasing-type SSB transmitters) and subtract it from the I channel. The desired signal will remain — free from QRM!

The Q detector has another function. Its output, combined with I in a phase detector (double-balanced mixer), produces a dc control voltage that locks the bfo onto the desired signal. As the oscillator or signal drifts, the signal appears in Q with the right polarity to correct the bfo.

So a DSB transmission-reception system combines the weak-signal performance of SSB (even allowing for the wider bandwidth) with the frequency-correcting ability of FM with automatic frequency control and adds a unique ability to suppress QRM.

Frequency Overlap

If two SSB signals have overlapping passbands, a receiver will hear them both. One will be distorted, but it will still cause interference to the other. But, with properly detected DSB, the phase locked signal will be heard, and the overlapping signal will be attenuated. How effective this would be on crowded ham bands remains to be seen, since hardly anyone has tested DSB lately, but 10 dB of QRM rejection seems a conservative guess. Signals may overlap without interfering — wouldn't that help in pileups?

On VHF, DSB would prove particularly useful. There's no shortage of band space, and DSB is just as good as SSB for weak-signal DX. Since SSB transmitters for VHF are quite complex, simple "plate modulated" DSB transmitters — AM transmitters with balanced finals — could enable many more hams to enjoy the DX potential of 6, 2, and above.

DSB Transmitters

Short out the crystal filter in a typical SSB transmitter, and it will put out DSB. That's not the easy way to do it, though, unless you have a spare SSB exciter or two. Fig. 4 is a simplified schematic of a DSB final stage. It's quite like an AM final, if you can recall that many years ago, but the carrier is balanced out.

Fig. 5 is a sneaky circuit that uses that most modern of components, the MOSFET. It's just like a plate-modulated AM stage, but it doesn't put out a carrier. A MOSFET has an extremely high-input impedance, like a class A tube amplifier, and it also has a low-output impedance, like a tube. But amplifier tubes are essentially rectifier tubes with one or more control elements. A triode tube is just a diode with a

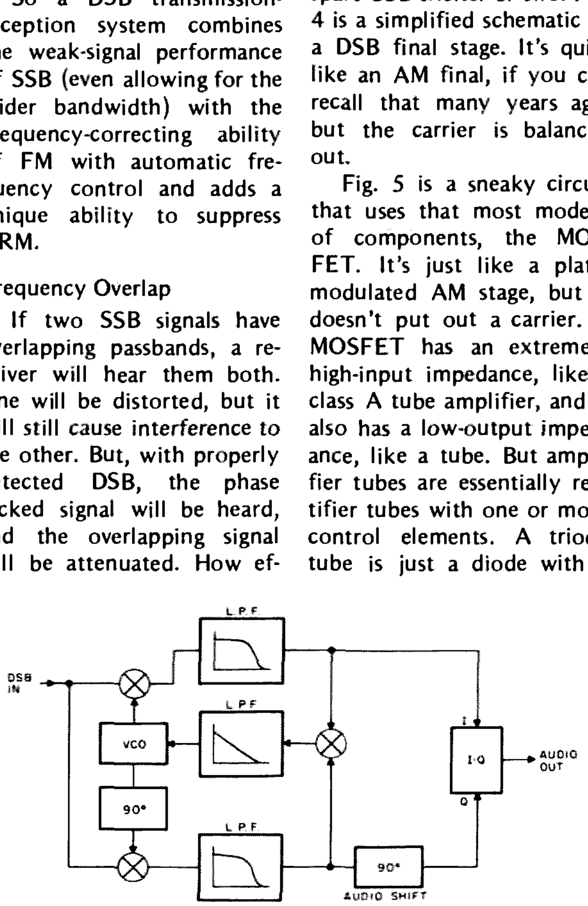

Fig. 3. Biaural detector providing rejection of undesired signals.

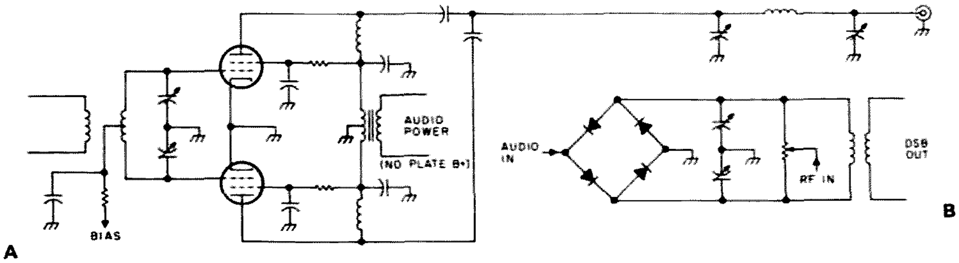

Fig. 4. (a) Balanced modulator using tubes; (b) Ring-type balanced modulator for use in low-power stage of a DSB or SSB transmitter.

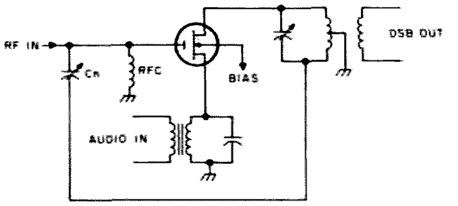

Fig. 5. Single-device balanced modulator. FET must be bidirectional. VMOS power FETs and many others are not; check spec sheets.

grid. FETs, on the other hand, are not diodes. The source and drain (cathode and anode) can be reversed, and current will still flow. Control is by the voltage between the gate and the source.

Notice that this modulated amplifier does not have any source of dc. All power for the stage comes from the audio amplifier. In the absence of audio, there's no output. What could be more balanced than that? By properly neutralizing out the input capacitance of the FET, up to 90 dB of carrier suppression is attainable.

A tube final amplifier turns dc into carrier and generates sidebands from the audio power. If the negative voltage peak of the audio exceeds the dc supply voltage, the tube stops conducting over that portion of the audio cycle and distortion (splatter) results. This can't happen with a bidirectional FET, which stays linear below 0 volts. So, even if you apply dc in order to produce a carrier, there will never be a splatter. Any amount of carrier can be used, from zero on up to the transistor's own limit. But the intelligence-bearing sidebands are not affected. Even the AM boys should like that kind of splatterproof rig!

Synchrodyne Reception

The cheapest ham receivers today are the direct conversion, synchrodyne or homodyne, units that mix an oscillator with the input signal, detecting either SSB or CW. No i-f is needed. The receiver oscillator doubles as the CW transmitter oscillator in one such rig, the popular Heath HW-7. But, on SSB, the bandpass of the receiver is twice as wide as desired. The 3 kHz below and above the oscillator is heard, but that means you hear undesired signals along with the one you want.

Since DSB makes use of both sides of the carrier frequency, a synchrodyne has the perfect bandpass. A synchronous detector automatically tracks frequency and phase drift on a DSB signal, and it doesn't require fixed selectivity filters. So a synchronous detector can be operated over a wide frequency range as a direct-conversion receiver. No i-f strip or conversion is necessary, which makes for the best possible dynamic range and sensitivity. The cost of the detector is compensated for by the saving in the i-f

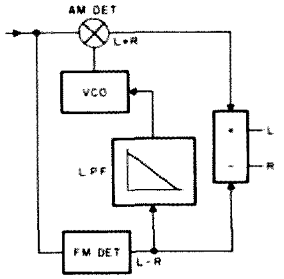

Fig. 6. Simplified AM stereo receiver. Everything but the output network is part of a standard PLL circuit.

stages and filters. Selectivity comes from the low-pass audio filtering in the detector.

AM Stereo

The big money in the radio broadcast game has been shifting to the FM band in recent years. The noisy, low fidelity monophonic sound of AM broadcasting just can't compete with FM where both are available. But AM broadcasters are planning a comeback, thanks to some of the techniques outlined above.

Synchronous detection permits AM receivers to reject heterodynes and much other noise (not, unfortunately, pulses such as ignition noise). Higher fidelity AM is thereby made possible. But, even better, it makes AM stereo practical.

Two rather similar systems have been proposed for AM stereo. Neither is a simple left-on-the-upper, right-on-the-lower sideband system. Instead, the two channels (L+R) that constitute a regular monophonic AM signal are generated using double-sideband techniques with suppressed carrier. The carrier that was used to generate the DSB is then phase modulated with the difference (L-R) audio. An AM stereo receiver then has an AM detector drawing L+R from the sidebands, and an FM detector drawing L-R from the transmitted carrier and its associated sidebands. See Fig. 6.

Two of the systems presently being considered by the FCC differ primarily in that one, proposed by Leonard R. Kahn (an SSB pioneer), has a 90° phase difference in one modulator, whereas the other, proposed by RCA, does not. But that's another story . . .

An AM stereo receiver doesn't require the sophisticated phase locking circuitry of a DSB receiver, since it has a carrier to phase lock to. Recall that PM doesn't actually change the frequency or phase of the carrier – modulation always consists of adding sidebands. ICs like the 561 PLL detector can be adapted to such a system, while existing mono AM receivers won't even notice the difference. Unfortunately, DSB without carrier can't be received with such inexpensive chips, which are really exalted carrier AM detectors, not synchronized to the sidebands. The chip makers haven't built them, yet.

Too few amateurs understand the virtues of two complete sidebands. While conventional full-carrier AM is terribly inefficient, balancing out the carrier and using a synchronous receiver results in a communications system with weak-signal efficiency at least the equal of SSB, with substantial QRM rejection, automatic drift compensation, and reasonably economical hardware. Amateurs should give more thought to using DSB, especially for long-haul VHF work. ■

Reference

1. Goldstein, F.R., "AM Is Not Dead – It Never Existed at All," *73*, May, 1976, p. 110.

John F. Crowther WA1TNG
Mile Creek Road
Old Lyme CT 06371

Time And Tide — Digitally

— march to a different drummer

The modern equivalent of a Renaissance man would be, I suppose, some character who was equally knowledgeable about professional football, classical ballet, and nuclear physics. Not being quite in that league, but struggling, I try to combine electronics, sailing, and getting along with my wife as the attainments of a modern poor man's Lorenzo de Medici.

Sailing and celestial navigation offer numerous opportunities for the design and use of digital gadgetry. In sailing along the east coast, where shoal waters are a constant hazard, it is often quite important to know whether the tide is out or in. Numerous commercial and government publications tell you, for every day of the sailing season, what time it is high tide at certain principal ports, such as Boston, New Haven, or New York. Other governmental publications tell you when it is high tide at numerous other ports, but only that it is so many hours and/or minutes before or after high tide at the principal ports; e.g., at Stonington, Connecticut, it is two hours and 30 minutes before high tide at Boston.

Hence, the sailor wishing to know what time is high tide at South Clamshell RI must first look up the tidal data for Boston (in EST, while he is on EDST) and then add or subtract the tabular difference. This can get quite confusing, and it would be nice to have a timekeeping device that would tell you the state of the tide at any moment for your own particular harbor or the one you are heading for.

Tide clocks are offered by several suppliers of marine hardware and boat equipment. They are designed to

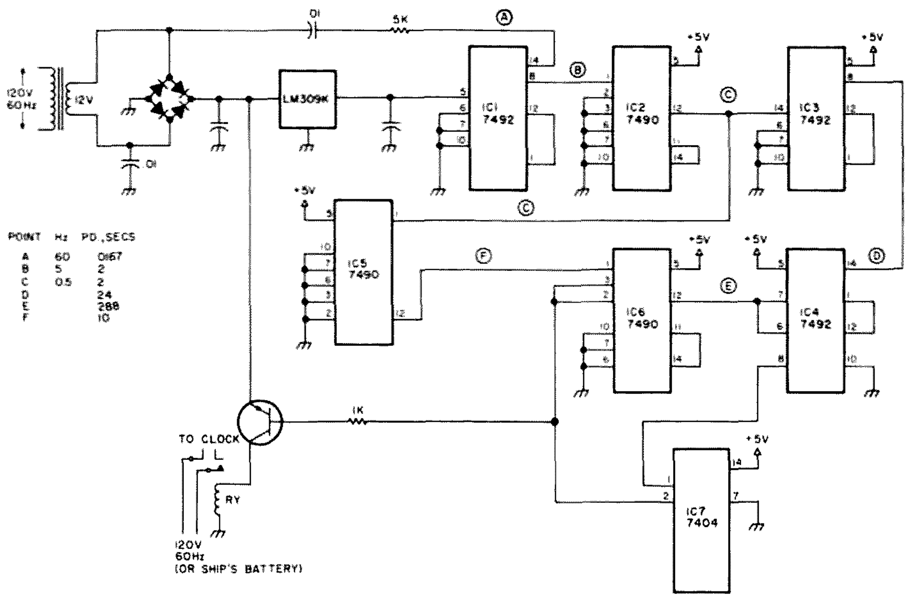

Fig. 1.

run off the power lines, 120 volts, 60 Hertz current, and have only a single hand. It points straight up at high tide and straight down at low tide, with a few gradations in between.

These little goodies usually sell for $40 and more, and they are useless during the winter or on board an actual boat, where the time reference of the power line is not available.

Electric clocks – the ordinary kind found in most households – can be bought on sale for as little as $3.00. And battery-operated clocks, suitable for use on a boat, are widely available. But both kinds of clocks are designed to turn the big hand around in exactly 60 minutes. It just so happens that from the first high tide today to the first high tide tomorrow averages out at 24 hours and 50 minutes. The variation from week to week is plus or minus up to 20 minutes or so, but this means little to a sailor; he wants to know whether he is within an hour or two of low tide to escape a grounding. The tidal cycle is set by the moon, and a moon clock would be 50 minutes per day slow by standard time.

I've tried to regulate spring-driven clocks to lose 50 minutes a day (and battery clocks, too) but their regulators don't afford that much variation. So it occurred to me that there might be an application of electronic timing circuitry that would do the job.

A loss of 50 minutes in 24 hours works out to a loss of five seconds every 144 seconds – both nice digital integers. If I could shut off an electric clock for five seconds out of every 144 seconds, I'd have it made. The circuit shown in Fig. 1 will do just that.

A conventional five-volt regulated power supply drives a TTL 7492 frequency divider, which reduces the 60 Hertz power line frequency by a factor of 12 to five Hertz. A 7490 divides this by 10 to give 0.5 Hertz, or a period of two seconds per cycle. Two more 7492s divide by 12 and 12, outputting pulses with a period of 288 seconds, of which 144 seconds will be high and 144 seconds low (a symmetrical square wave).

Meanwhile, a second 7490, fed from the first, divides a 2-second pulse down to a 10-second pulse – again, spending five seconds high and five seconds low. In this application, it isn't the length of the total pulse period that matters, but the lengths of the low and high states.

You want IC4, the 144-second counter (in its low condition), to inhibit the five-second counter. It can do this by putting its low output into one gate of IC7, a hex inverter. The IC7 output is then high, which, when connected to the reset pins 2 and 3 of IC6, holds its output low. This low output is in turn used to keep IC4 counting by grounding its reset pins 6 and 7.

When IC4 has counted up to 144 seconds, its output goes high. Through the inverter, this flips the reset pins of IC6 to low and starts the five-second low period of that counter. Its output remains low, so IC4 keeps on counting in its high state for five seconds. Then IC6 goes high, the high ungrounds reset pins 6 and 7 of IC4, and it goes low again. But the instant it does this, its inverted output ungrounds reset pins 2 and 3 of IC6, disabling it.

IC6, therefore, never actually goes into the high state, except for a few nanoseconds. Its five-second low period is all you ever use.

Fig. 2 shows the states of all the ICs involved in the critical timing cycles. Note that IC6 in effect preempts all but five seconds of IC4's high period by resetting it. But the driving pulse, which is 24 seconds long, from IC3 to IC4 has not been interfered with, so the total pulse length delivered to IC4 by IC3 has been shortened by five seconds. Hence, the ultimate period of IC4 is 139 seconds off, five seconds on – total, 144 seconds.

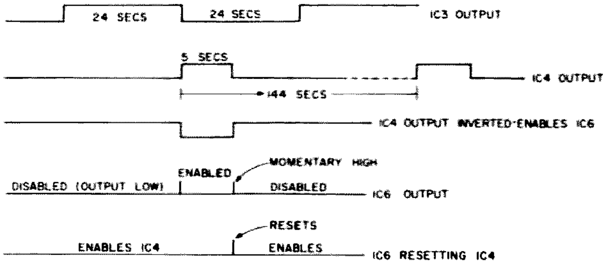

Fig. 2.

Now you have the clock periods all shipshape. How do you turn on and off an ac power line with them?

The roughly four volts dc serving the IC outputs is too weak to kick any relay I know about, so recourse was had to a transistor, switching the higher unregulated voltage available from the power supply – about 15 volts. This is plenty to actuate a 6- or 12-volt relay, rated at 500 or 1000 Ohms, 12 milliamperes. I chose to invert IC4's output through the gate in IC7, to drive the transistor on and turn on the relay and the electric clock during IC4's 139-second low period.

It would have been more elegant to do the ac switching with an SCR, but I had no data on how to arrange that. Maybe some reader can supply a scheme.

This gadget may not help to solve the juvenile delinquency problem, but it was a fascinating exercise in learning how TTL works. I have only one textbook, *The TTL Cookbook* (plus articles in *73*.) Indispensable tools were my Heath-Schlumberger counter, which has the uncommon added feature of measuring periods up to 99.999 seconds, and my little Pioneer Products frequency standard, with outputs as slow as 25 Hz. By speeding it up to 1000 Hz, the counter chain can be monitored quickly, instead of waiting 139 seconds for each check. Equally indispensable were my proto board and a stopwatch.

By plugging LEDs into contact sockets on the proto board at the output pins of IC4 and 6, I was able to see just what was going on in each of them.

It may be seen that this technique would lend itself to setting up any other timing cycle that might be desired, such as "on" from noon to 2:00 pm on Thursday or to turn on your Christmas tree lights between December 15 and 30 even though you left for Florida back in November.

Now, what about on a boat with only 12-volt battery power? There are two routes. I first substituted a 555 timer, adjusted to 60 Hz, for the power line source. This is done most easily with a 1 uF tantalum capacitor and a string of PC-style variable resistors, say, 100k and 10k. By juggling the latter, you can get to 59.999 Hz, which is close enough. A neater way is to buy the 60 Hz plug-in kit that is sold with regular digital clock kits. It is CMOS and won't drive TTL reliably without a CD4001 NOR gate (a quad) as a buffer, with the two inputs of the gate in use paralleled, in series with a 2.2k resistor. It can drive one TTL load (see p. 168, *TTL Cookbook*).

Oh, I almost forgot. Set your tide clock at 12:00 when the book says it is high tide, and it will be at 12:00 at high tide forever after, give or take up to 20 minutes. At 6:00 by the clock, it will be low tide; at 3:00 it will be half-way between high and low, with the tide going out; at 9:00, the tide will be halfway in and rising. ■

Karl T. Thurber, Jr. W8FX/4
233 Newcastle Lane
Montgomery AL 36117

The Sneaky J

—for cliff dwellers and other unfortunates

Hamming is fun, but the simple fact that an increasing number of us live in apartments, condominiums, dormitories, and other urban locations where there are antenna installation restrictions puts a definite crimp in the operating enjoyment of many cliff dwellers. Often it is not possible to install a legal antenna, particularly on the HF bands, and mobiling is the only practical answer. However, in more cases than one, particularly on VHF, some sort of radiator can be fashioned and installed en route to the midnight raid on the refrigerator.

A particularly easy and inexpensive design that lends itself readily to the problem 2 meter base station installation is the J-style antenna. It was quite popular during the thirties and forties, particularly with police, fire, railroad, and forestry systems, and, to a lesser extent, with hams, especially on the old five and six meter bands. Even today, business radio installations frequently use the J. It has a number of advantages, particularly with regard to its omnidirectional coverage, vertical radiation pattern (for repeater work on 2), and lack of ground-plane radials. The fact that radials are not needed allows for a "Slim-Jim"-type of installation that is not especially conspicuous, yet is mechanically easier to construct than either ground-plane or coaxial-type verticals.

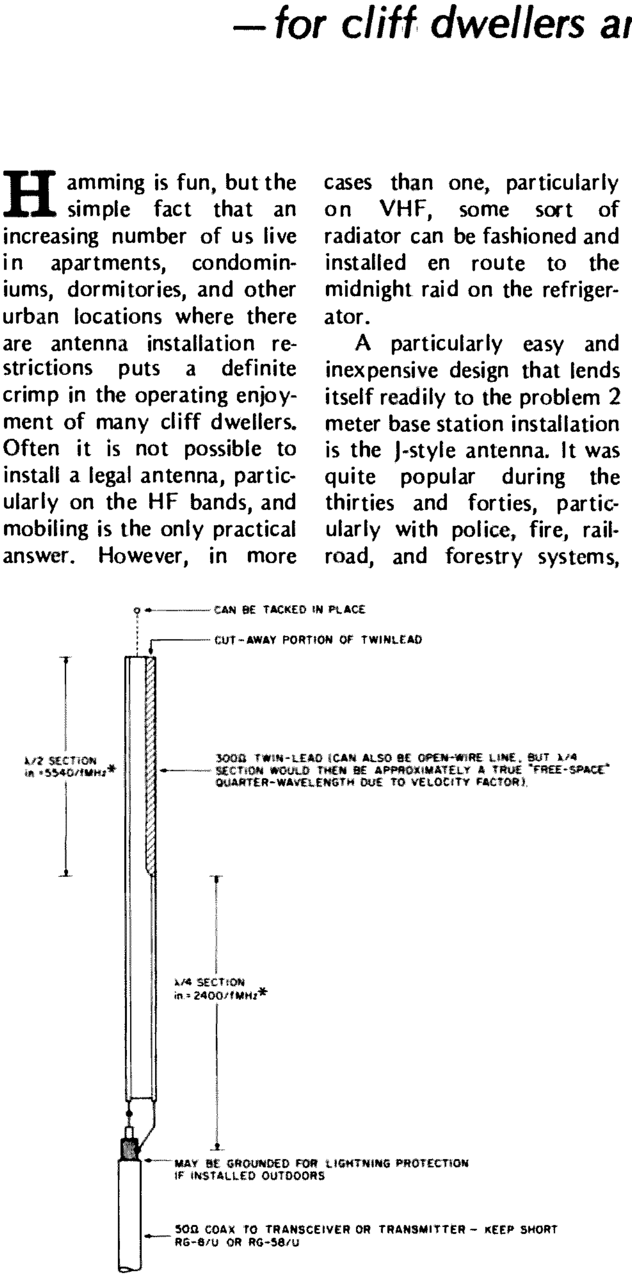

*Fig. 1. J antenna. *Formulas are approximate. This should be tuned using an swr bridge for best results. See the text for details. (Drawing not to scale.)*

The J-style antenna is, basically, a variation of the vertical dipole, with the matching device located at the bottom end for adjustment convenience. It may be fed in several ways, such as with balanced feedline (300-600 Ohm), directly with coax, or through a special matching device. Feeding directly with coax is by far the simplest method and will result in a fairly good impedance match approximation that will normally be adequate, producing swrs lower than 1.5:1 at the design frequency.

The essential idea behind the J is that the matching stub should not radiate, but, in real life, it does to a small extent, interfering with radiation from the half-wave portion of the antenna to a certain degree and effectively raising the radiation angle. However, this technical consideration should not be of real concern for most repeater and local simplex work. The mere simplicity of the antenna, and the fact that it may allow you to get on the air from an otherwise difficult or impossible location, overrides these considerations.

Normally, the J antenna is constructed from parallel lengths of aluminum tubing supported at the bottom where the matching stub is located. However, in this version, designed for attic and other out-of-the-way installations, the antenna is constructed out of a length of high-quality TV-type 300-Ohm twinlead and tacked or stapled at the top to an attic beam or other support. A decent match is obtained to 52-Ohm RG-58/U or RG-8/U coax by means of the built-in quarter-wave matching section made from the lower portion of the twinlead itself.

Fig. 1 shows the simple mechanical construction details. For 146-148 MHz FM work, the antenna can be cut with the half-wave section at 39" and the quarter-wave matching section at 18". These dimensions are a bit long and will have to be cut and pruned slightly to account for proximity to

other objects (a real factor, if mounted indoors in an attic), the velocity factor of the twinlead, and so-called "end effects." You can experiment, using a good VHF-type swr bridge, cutting back first the ¼-wave matching section and then the ½-wave section about ¼" at a time until a good match is obtained. If a low swr (below, say, 1.5:1) cannot be obtained in this manner, try trimming the coaxial cable an inch at a time until the swr as indicated at the transmitter or transceiver is acceptable. This little expediency will not, of course, affect the overall swr at the antenna (where it counts), but will at least allow the antenna to take power properly. If an swr bridge is not available, you can probably go with dimensions of 38" for the ½-wave section and 17" for the ¼-wave matching stub at 147 MHz, at least for starters. Overall length of the antenna will, of course, be the length of the half-wave and quarter-wave sections combined.

The little J antenna cut for 2 meters will also do reasonably well for occasional VHF aircraft monitoring (108-136 MHz) and VHF/high listening (152-174 MHz). If you want to design it primarily for such work, rather than FMing, try dimensions of 46" and 20" for aircraft; use 35" and 15" for VHF/high monitoring. Should six meters be your cup of tea, try 110" and 48" for pre-pruning starters. Incidentally, the antenna should also give a good account of itself on 1¼, but adjustment may be a bit touchy. See Fig. 2 for details. (Dimensions refer to the ½-wave and ¼-wave sections, respectively.)

If the attic of your apartment or condominium isn't accessible or if you don't have one, a bit of individual ingenuity will be required. You might try suspending the unit from an accessible rain gutter or, as a last resort, taping it to an "outer" indoor wall. In any case, results will be far superior to those possible using a rear-apron mounted rubber ducky or ¼-wave whip located at the operating console. Just try to keep the antenna as far removed from house wiring and large metal objects as possible. Of course, the J can't be used indoors directly under a metal-sheathed roof. Be sure to use low-loss RG-8/U or its equivalent if a long lead-in run is required.

Finally, the J makes for about the simplest portable antenna possible for those quick vacation and business trips when something a bit more sophisticated than a rubber ducky is in order. The antenna and feedline form an integral unit and are completely flexible. The whole thing can be simply rolled up and packed along with the transceiver in its box or carrying case. Overall results usually will be much better than a ¼-wave antenna, yet slightly inferior to the 5/8-wave ground plane.

Try a J for a simple 45-minute construction project one afternoon – you may be surprised by the results! ■

Band	½-wave section (in.)	¼-wave section (in.)
6m (51 MHz)	109	47.5
Aircraft (120 MHz)	46	20
2m (147 MHz)	38	17
VHF/high (160 MHz)	35	15
1¼m (223 MHz)	25	11

Fig. 2. Approximate dimensions for the J. For receiving use only; dimensions are not critical. For 6, 2, and 1¼m, use slightly longer lengths than those indicated in the table. The antenna is then adjusted for the center of the operating range using an swr bridge or antenna bridge, cutting and pruning as required to get a good match.

Social Events

from page 116

at the Washington City Park. There is a large area for traders' row; no extra charge to exhibitors for displays. There is a picnic area, refreshments and lunches are available, and there are lots of prizes and activities for the ladies. Ham pilots can fly into our airport. Free transportation will be provided. For more info, write WA0FYA, Dutzow MO 63342.

AMARILLO TX
AUG 11-13

The 1978 edition of the Golden Spread Amateur Radio Convention will be held at the Holiday Inn West Motor Hotel, 601 Amarillo Blvd. West, Amarillo, Texas, on Friday evening, Saturday, and Sunday, August 11, 12, and 13, 1978. It is sponsored by the Panhandle Amateur Radio Club of Amarillo. An area has been set aside for amateurs to display their trading and swapping gear. Two Hospitality Hours are slated: one for early arrivals the evening of Aug. 11 and the second for Saturday evening, Aug. 12. Six technical sessions will be held, featuring the very latest in communications expertise. Special activities for the ladies will be available so that there will be something for everyone. Preregistration will be $4.00 per person; registration at the door will be $6.00.

MUNCIE IN
AUG 12

The Delaware Amateur Radio Association will hold a hamfest from 8:00 am until 5:00 pm on Saturday, August 12, 1978, at Springwater Park, east of Muncie on Country Club Road.

There will be hourly prize drawings from 10:00 am until 4:00 pm, with the grand prize drawing at 4:00 pm. Spaces for the flea market are available at no charge. Tickets are $1.50 in advance and $2.00 at the gate. Talk-in on 146.25/.85 and 146.52. Send your check and SASE to PO Box 3021, Muncie IN 47302.

CHARLOTTE VT
AUG 12-13

The International Field Days and Hamfest sponsored by the Burlington Amateur Radio Club will be held on August 12-13. Door prizes, raffles, contests, bingo for ladies, a two-day flea market, and much more. Chairman Bob W1DQO suggests early reservations for camping sites on site at Old Lantern, Charlotte VT 05445. Early bird registration at $3.00, with gate cost of $3.50. For other info, please write BARC, PO Box 312, Burlington VT 05402.

WILLOW SPRINGS IL
AUG 13

The Hamfesters 44th annual picnic and hamfest will be held on Sunday, August 13, 1978, at Santa Fe Park, 91st and Wolf Road, Willow Springs, Illinois, a southwest suburb of Chicago. There will be exhibits for OMs and XYLs and the famous swappers' row. Tickets at the gate will be $2.00; in advance, $1.50. For hamfest information or advance tickets, send check or money order (SASE appreciated) to Bob Hayes, 18931 Cedar Ave., Country Club Hills, Illinois 60477.

POMONA CA
AUG 13

The Tri-County Amateur Radio Association will hold its annual hamfest on Sunday, August 13, 1978. Several prizes will be awarded including a Midland 220 MHz transceiver. Drawing tickets are 50¢ each. The winner need not be present. The hamfest/picnic will be at Westmont Park, West 9th Street, ½ mile west of Highway 71. For tickets or info, write to Box 142, Pomona CA 91769.

LEXINGTON KY
AUG 13

The Bluegrass Amateur Radio Club annual hamfest will be held at the National Guard Armory on August 13, starting at 8:00 am. There will be major prizes, forums, refreshments, a paved flea market area, a large indoor exhibit space, and plenty of free parking. Advance tickets are $2.50; $3.00 at the door. Flea market space is $1.00 extra. Talk-in on .16/.76. For more info, contact Paul Heflin WA4PAB, 434 Potomac Dr., Lexington KY 40503, (606)-278-0646.

SAUK RAPIDS MN
AUG 13

The St. Cloud Radio Club will hold its annual Ham-Fest on Sunday, August 13, 1978, at the Sauk Rapids Municipal Park. Free camping and overnight parking available at the Lions Park, in Sauk Rapids, 1 mile from the municipal park. Check-in starts at 10:00 am. There will be many door prizes. Pop, coffee, hot dogs, and chili will be available. A ham gear swapfest and sale is planned, so clean out your junk boxes. Talk-in on .34/.94 and 3925 kHz. For further info, contact Bill Zins WA0OTO, Rt. #4, St. Cloud MN 56301; (612)-253-3428.

CEDARTOWN GA
AUG 13

The Cedar Valley Amateur Radio Club of Cedartown, Georgia, will sponsor the Cedar Valley Hamfest, which will be held on August 13, 1978, from 9 am to 4 pm, at the Polk County Fairgrounds located one mile east of Cedartown on US 278. Talk-in frequency will be (WR4AZU) 147.72/.12. Food, drinks and lots of prizes! For more information, please contact Jim T. Schliestett, Pres., W4IMQ, Cedar Valley ARC, PO Box 93, Cedartown GA 30125; telephone: (404)-748-5968.

ROCHESTER MN
AUG 18-20

The Central States VHF Society will hold its twelfth annual conference on August 18, 19, and 20, 1978, at the Midway Motor Lodge, Rochester MN. This conference is specifically oriented to operation above 50 MHz. An excellent technical program is planned. A dinner for the conferees and their families, an evening speaker, and prizes are included in the program. For further information, contact the Central States VHF Society, c/o Mr. Mel Larson, 2429 N.W. Viking Court, Rochester MN 55901.

ROCHESTER PA
AUG 19

The Beaver Valley Amateur Radio Association's first annual hamfest will be held on Saturday, August 19, from 9 am to 5 pm at Brady's Run Park located 5 miles north of Rochester PA on Route 51. Advance tickets are $3.00 or three for $8.00; at the gate, they'll be $4.00 or three for $10.00. Seller's fee is $1.00—bring your own table. There will be a flea market for new and used equipment. Camping spaces, swimming, boating and fishing are available at the park. Refreshments will be available. Prizes: (1st) Kenwood TS-520S, (2nd) Midland 13-500 2 meter FM transceiver, (3rd) DenTron Super Tuner. Talk-in on 25/85; check-in on 52/52. For more information, write Wayne R. Sphar WA3ZMS, Secretary BVARA, 1200 Atlantic Ave., Monaca PA 15061.

NEWBURGH NY
AUG 19

The Mt. Beacon Amateur Radio Club will hold its 5th annual hamfest on Saturday, August 19, 9:00 am to 5:00 pm, indoors at Stewart Field, Newburgh NY. This is a rain or shine event with a flea market and auction. Bring your own table. Talk-in on 37/97 and 52. Plenty of free parking. General admission is $1.00; sellers, $2.00; under 12 free. For additional information, contact Ron Perry WA2CGA, Rd 1 Glen Ave., Fishkill NY 12524.

REND LAKE IL
AUG 19-20

The Shawnee Amateur Radio Association's (SARA) annual hamfest will be held August 19 and 20 at the North Marcum Access Area on beautiful Rend Lake in southern Illinois. There will be prizes and a large flea market with no charge to vendors. Complete camping and recreational facilities available. Talk-in on 3.925, 146.25/.85, and 146.52. For more information, write or call Gary Wheeler WB9SWG, Box 229 RR #2, Carterville IL 62918, (618)-985-3397, or Nick Koenigstein WB9ELP, 2009 Gray Dr., Carbondale IL 62901, (618)-549-5931.

ABINGDON VA
AUG 19-20

The 2nd Annual Bristol Hamfest, sponsored by the Bristol ARC, Inc., will be held on August 19th and 20th at the New Washington County Fair Grounds, Route #11, Abingdon VA 24210. The event will be completely indoors with 45,000 sq. ft. of floor space and ample parking. Admission is $1.00 and flea market is $2.00 extra. Food and drinks on premises, with games for the children, and special activities and prizes for the ladies. First prize is a Ten-Tec Triton IV with power supply. Ladies' first prize is a GE food processor. There will be various other prizes. Talk-in 01/61 and 07/67. For further info, send an SASE to Lowry Rouse WD4ECF, 77 Bordwine Road, Bristol VA 24201 or call (703)-669-3086.

WARREN OH
AUG 20

The 21st Annual Warren Hamfest will be held at the Trumbull KSU campus, Ohio Route 45 at the Warren outer belt, on Sunday, August 20. This is an ARRL approved event which will be held rain or shine, dawn to dusk. There is a huge lawn for the flea market, with parks, lakes, and family camping nearby. $2.00 door prize registration.

HAMDEN CT
AUG 20

The WELI Amateur Radio Club's second annual flea market and auction will be held on Sunday, August 20 (rain date August 27) from 10:00 am to 4:00 pm at Radio Towers Park, Benham St., Hamden, Connect-

icut. General admission will be $.50, and vendor spaces are $5.00 each. For further information, contact Mike WA1PXM at 934-1063 or Dave WA1ZWB at 467-3258 (area code 203).

HUNTSVILLE AL
AUG 20

The North Alabama hamfest will be held on Sunday, August 20, 1978, at The Mall in Huntsville AL. There will be prizes, a large flea market, an ARRL forum, MARS meetings, and ladies activities. A hamfest supper will be held on Saturday night. For more information, write to N.A.H.A., PO Box 423, Huntsville AL 35804.

MARSHALLTOWN IA
AUG 20

The Iowa 75 Meter Net will hold its annual potluck picnic and hamfest on Sunday, August 20, 1978, at Riverside Park in Marshalltown, Iowa. After the 12:00 noon meal, there will be a short program with awards and prizes given to attending amateurs. All are welcome.

LAFAYETTE IN
AUG 20

The Tippecanoe Amateur Radio Association, Inc., will hold its eighth annual hamfest on Sunday, August 20, 1978, at the Tippecanoe County Fairgrounds, Lafayette, Indiana. From Interstate 65, take the Indiana 25 South exit and stay on Indiana 25 to the fairgrounds. There will be major preregistration and attendance prizes. To be eligible for preregistration prizes, tickets must be purchased in advance before August 10, 1978. Plenty of shaded parking with easy access to the flea market. Camping on the grounds, with limited electricity, is available from Friday night through Sunday night. Food and drinks will be available, also. Tickets are $2.00 each by mail or at the gate, with no extra charge for the flea market setup. Talk-in on 146.13/.73 and 146.94 simplex. To purchase tickets, send an SASE with a check to Bill Bayley WA9ZDI, 1021 Beck Lane, Lafayette IN 47905.

MANSFIELD PA
AUG 26

The Tioga County ARC hamfest will be held on Saturday, August 26, starting at 9:00 am at the Tioga Co. Fair Grounds on Rt. 6 between Wellsboro and Mansfield PA. The $2.00 admission is good for all special programs, and the XYL and children are free. In addition to the usual flea market and displays, a bingo table and other items of interest will be available for the ladies. The Pennsylvania Grand Canyon is within a short distance. Talk-in on 19/79, 52 simplex, and CB channel 5. For more information, write to Denny Vorhees WA3FWQ, RD #2 Box 117A, Millerton PA 16936.

WENTZVILLE MO
AUG 27

The Saint Charles Amateur Radio Club, Inc., will hold the SCARC Hamfest '78 on August 27 at the Wentzville Community Club. There will be prizes, food, and fun—flea market, CW contest, free bingo, food, beer, and more. Admission will be $1 per car. Talk-in on 34/94 and 07/67. For motel and camping information, prize lists, dealer reservations, and airport pickup, write to SCARC, PO Box 1429, St. Charles MO 63301.

LAPORTE IN
AUG 27

The LaPorte County Summer Hamfest, sponsored by the Michigan City and LaPorte Amateur Radio Clubs, is Sunday, August 27, at the LaPorte County Fairgrounds, LaPorte IN. Dealers may set up beginning at 6:00 am and the general public is welcome beginning at 8:00 am. Lots of space indoors and also outdoors on a paved, dust-free midway. Free tables and good food. LaPorte is 50 miles southeast of Chicago on Indiana #2. Talk-in on .01/.61, .37/.97, and .52 simplex. Donation is $2.00 at the gate. For more information, contact LPARC, PO Box 30, LaPorte IN 46350.

ST. CHARLES IL
AUG 27

The Fox River Radio League Hamfest will be held indoors at the Kane Co. Fairgrounds on Sunday, August 27, 1978, at 8:00 am. Activities include commercial sales and exhibits, a used equipment market, door prizes, and a drawing for a Kenwood TS-520S and a Midland 13-500 transceiver. Talk-in on 146.94. Tickets are $2.00 at the gate and $1.50 in advance. For further info, contact Don Berridge WB9PAC, 2303 Deerfield Way, Geneva IL 60134.

MORGANTOWN WV
SEP 3

The Monongalia Wireless Association will hold its second annual Mon Ham Gala on Sunday, Sepember 3, 1978, at Westover Park, 300 yards off I-79, near Morgantown, West Virginia. The activities begin at 10:00 am and end at 5:00 pm. Talk-in on 16/76. For complete information, contact John Curtis WB8AHH, 817 Willowdale Road, Morgantown WV 26505.

Robert M. Harkey W4CUG
14401 Cabarrus Rd.
Charlotte NC 28212

The End of Autopatch Embarrassment

—don't get caught with your Micoder™ down

The Heath Micoder™ has apparently been a popular item since it was put on the market. This combination microphone/tone encoder has a capacitor-type microphone with an audio amplifier built into the cartridge and a two-tone oscillator all enclosed in the microphone case together with a nine-volt battery. Also included is an LED/transistor combination which indicates presence of the low tone oscillator signal.

The microphone has been a great success and produces beautiful modulation on the two meter FM band, but the encoder has given some problems. Although I have not specifically pinpointed a reason for unreliability of the encoder, I believe that the use of the 555 IC in a hostile (mobile) environment is the biggest culprit. Even though Heath uses 1-percent precision resistors in the feedback netword to obtain the desired output frequency, difficulty has been experienced in obtaining the frequency tolerance necessary to access various repeater autopatches. (See K4JEM's review of the Micoder in the August, 1977, issue of *73* for a more detailed discussion of construction and performance.)

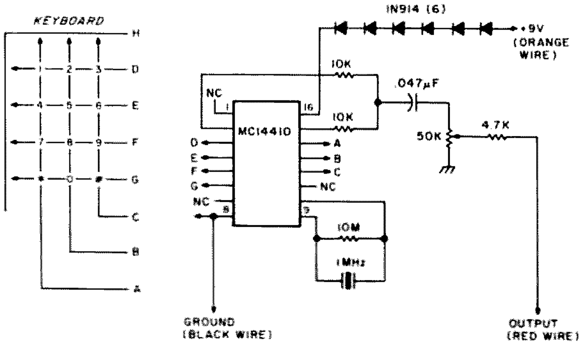

Fig. 1. MC14410 encoder. Notes: (1) All resistors are ¼ W. (2) 1N914s are soldered in a string and installed on the circuit board. (3) The crystal is in an HC6/U holder.

My Micoder was built in conjunction with the Heath HW-2036 synthesized two meter transceiver. Although the Micoder went together without difficulty, the output frequencies were just barely within the tolerance specified by Heath. After installation of the rig in my car (and debugging the 2036), the encoder would act erratically on the two most popular local repeaters. Several times, I got the patch up and couldn't get it back down—a very embarrassing situation, especially when no one was around with an encoder to give an assist. Since I already had one of the Motorola MC14410 2-of-8 tone encoder ICs from some other experiments, I decided to design a PC board and fit it into the microphone case. The circuitry of the MC14410 is very simple and presents no real difficulty getting it into the microphone case with room to spare. I'm somewhat surprised that Heath didn't choose this way to go, considering the simplicity, parts count (13 versus 36), power drain on the battery (1.5 mA versus 12 mA), and the lack of frequency adjustments with the MC14410.

The circuit that I am using is shown in Fig. 1. With the exception of the level control, there are no adjustments. The 1 megahertz crystal was a junk box item and measured 239 Hertz high when used in this circuit. A small trimmer capacitor could be installed across the crystal if desired to put it right on frequency, but I didn't feel it was necessary. The combining resistors off pins 2 and 15 were chosen arbitrarily since plenty of output was available. The 4.7k resistor on the output of the level control was installed to match the microphone circuit. The only minor problem encountered was the power supply of the Heath circuit versus the MC14410 circuit. The 14410 requires a supply voltage in the range of 4 to 6 volts, with 6 volts being the maximum upper limit. I decided that it was desirable to retain use of the 9-volt battery in the mike case to power the audio amplifier in the microphone cartridge, and, therefore, some means of dropping approximately 3.5 volts had to be devised. Since zener diodes in this range were not available to put in series with the battery, I elected to put six 1N914s in series to accomplish the same purpose. These six diodes drop about 3.6 volts under the 1.5 mA load and provide approximately 5.6 volts to the 14410. This arrangement works beautifully, is very inexpensive considering the cost of 1N914s today, and does not waste power (very important in today's energy-conscious world).

The encoder schematic is shown in Fig. 1 together with keyboard connections. Note that the 1N914s are soldered together in a

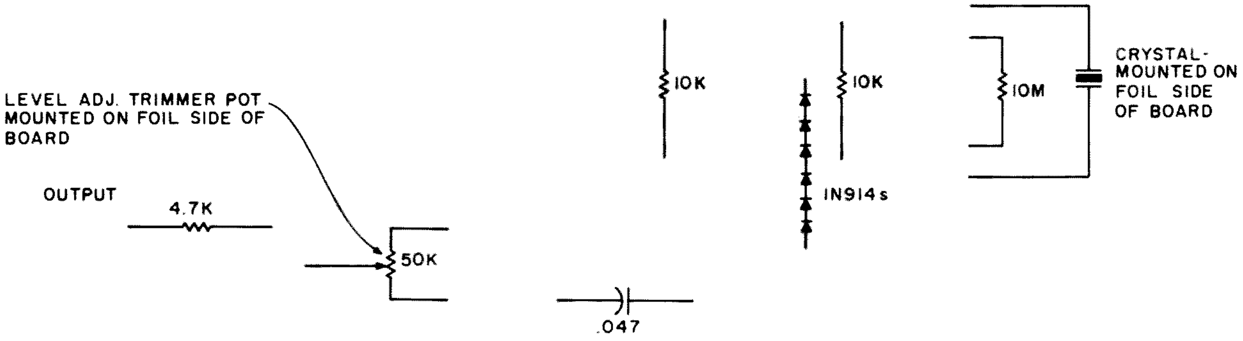

Fig. 2. Component layout.

"string" with very short leads prior to mounting on the PC board. The crystal and output level trimmer are mounted on the foil side of the board. Mounted in this manner, the crystal fits nicely between the mounting posts of the microphone case and the trimmer adjustment is readily accessible. The MC14410 must be soldered directly to the PC board to allow clearance for the Chomerics keyboard. Likewise, the keyboard pins are soldered to the PC board. Before soldering the keyboard, assemble the PC board and keyboard into the mike case and check the mounting holes for the four retaining screws. If necessary, enlarge the mounting holes in the PC board to ensure proper fit of the keyboard and PC board into the case. The outer foil on the PC board layout serves no purpose other than a trimming outline for the board. The component layout is shown in Fig. 2, and a PC board layout is shown in Fig. 3. Unused pins (#1, #7, and #11) on the MC14410 may be bent up out of the way or cut off.

After completion, solder the red, black, and orange wires from the mike case to the pad on the PC board and you're ready to give it a try. Adjust the level pot about midway and try the local autopatch. Either increase or decrease the level adjustment as necessary to obtain the proper deviation. My 2036 requires about 90 mV for reliable operation of the encoder.

My encoder has worked without fail, and I recommend it to anyone having trouble with the Micoder circuitry. ■

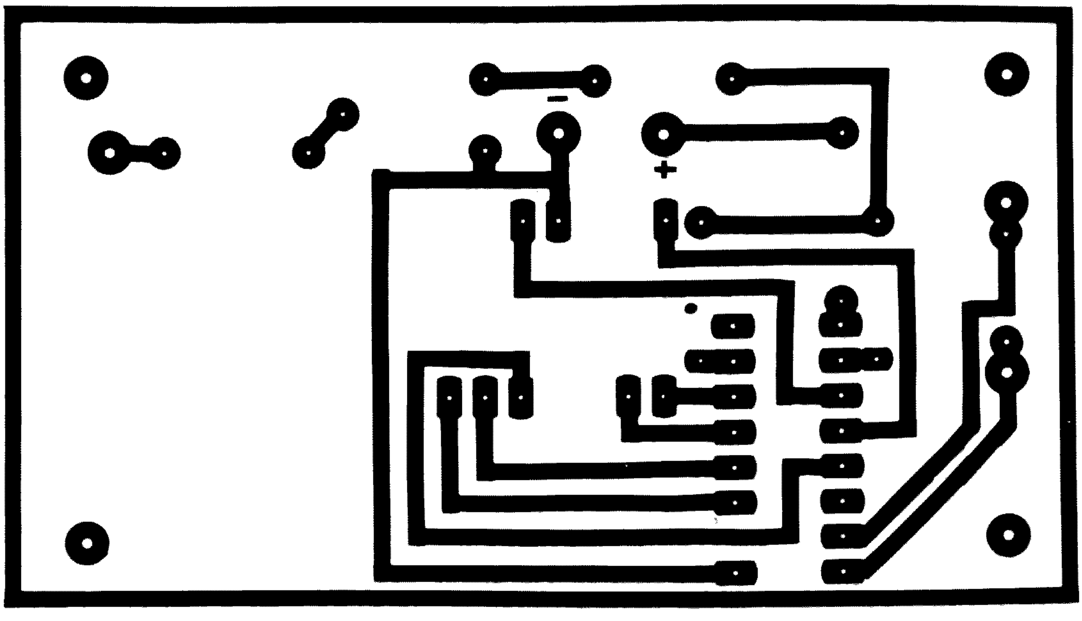

Fig. 3. PC board.

The "Do It All" Digital Clock

—it's even programmable

Fred Blechman K6UGT
23958 Archwood Street
Canoga Park CA 91304

Electronic digital clocks have gone through an interesting evolution in the last 10 years. In the mid-1960s, if you wanted to build a six-digit clock with standard integrated circuits, it took at least 12 ICs and about 70 other discrete parts, plus a lot of wiring – and the parts cost at least $75! Then just a few years ago, "clock chips" – integrated circuits specifically designed for the task – made it possible to build a simple six-digit clock with only one IC and a small number of other parts, for a total parts cost of less than $15. It simply told the time, accurately, to the second. Then, responding to market demand for more varied performance, designs started becoming more sophisticated. Today you can find a number of clock designs with extra features, such as an alarm or a "sleep" switch to turn off a radio after a preset period.

Perhaps the most outstanding example of a digital clock kit offering a large variety of optional features that would be of particular interest to hams and CBers is the System 5000 Programmable Clock Kit in its "basic" form, available from Digital Concepts Corporation, 249 Route 46, Saddle Brook, New Jersey 07662, for $34.95 plus 5% shipping and handling. This kit, complete to the line cord, solder, and even solder wick, features a bright ½"-high 4-digit fluorescent display with high visibility under high ambient lighting.

With the appropriate switches, you can "program" any or all of the following functions:

- 12- or 24-hour display
- Set hours and minutes independently, either forward or reverse
- Display month and day with a 4-year calendar that only needs correction on February 29 of a leap year
- Display alternate time zone, such as ZULU (GMT),

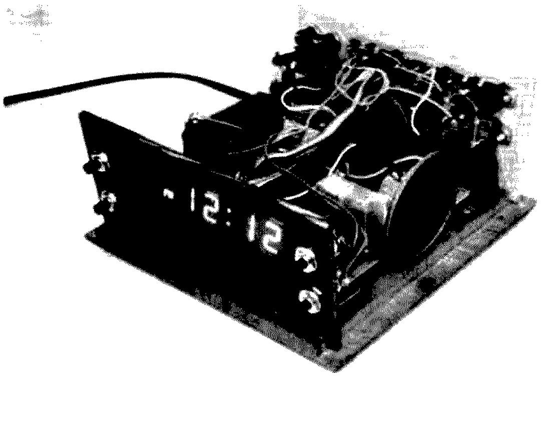

Completed clock with cabinet top removed. Slots in base hold front and rear panels. Forward and reverse time-setting switches are on the front panel; 11 other switches are on the rear panel. The battery on the left side maintains all time registers in memory when power fails. The speaker is used to sound an alarm at either of the two alarm settings.

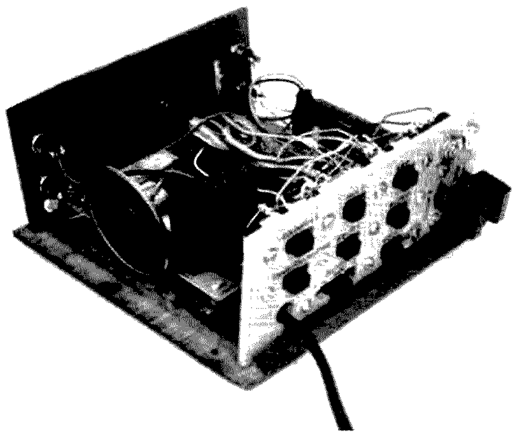

The rear panel contains most of the function switches, with the forward and reverse time-setting switches on the front panel.

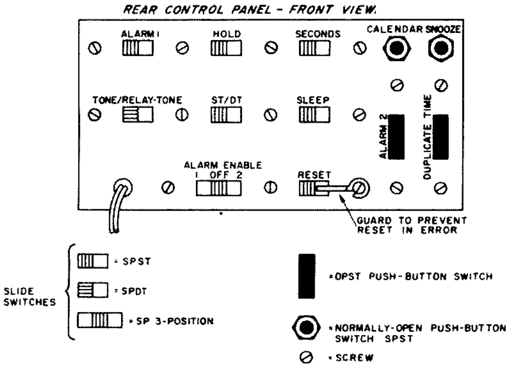

Fig. 1.

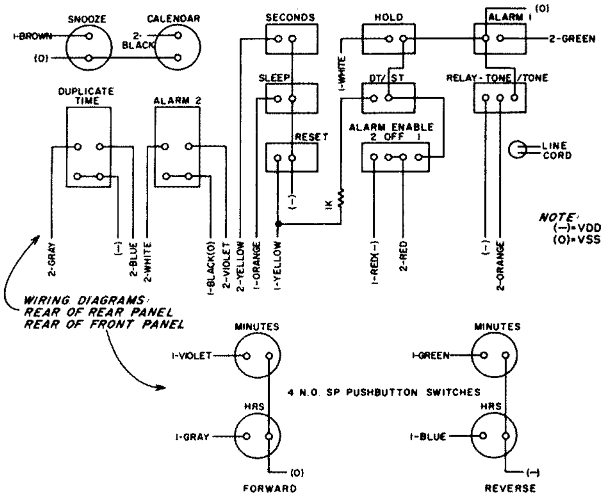

Fig. 2.

on command, while retaining local time in memory

- Activate two alarms independently, each with its own time setting, to trigger a relay or a tone, or a relay followed by a tone eight minutes later
- Reactivate the relay at precise 10-minute intervals after either alarm setting, such as for a reminder to identify with your call letters
- Activate the relay for a preset time up to 59 minutes to power ac or dc external circuits or devices
- Select local Daylight Time or Standard Time without affecting the alternate time-zone setting
- Display seconds on command
- Hold count on command, for precise time setting
- Reset all circuits to "zero" and off

Two switches and a speaker are included in the basic kit, with eight additional switches available as an option for $3.75. A relay option kit, which includes a miniature 700-Watt relay and the interface components, costs $4. An extremely well-made and attractive assembled hand-finished solid walnut cabinet, with a colored plastic faceplate and a textured plastic back panel, sells for $11. To operate this clock mobile from a 12-volt dc supply, a Quartz Time-Base Kit is $6.95. A vinyl walnut cabinet, including faceplate and rear panel, is $5.95.

This clock's "brain" is the 40-pin DCC-7302N integrated circuit. The outputs operating the display are direct drive (eliminating transistor drivers) and nonmultiplexed, so no RFI (radio frequency interference) is generated — particularly important in a ham shack or a car. This IC has so many possible combinations of features that Digital Concepts includes an 8-page specification sheet showing all the possible options. Also, to aid the builder, separate assembly and programming manuals are provided. Although these manuals are not as detailed as Heathkit manuals, they are far better than most other clock kit distributors provide.

The fluorescent display is a bright blue-green and will shine clearly through most colored filters. A very effective automatic brightness circuit dims the display to match the surrounding light. On most display functions, the colon blinks at a 1 Hz rate, giving life to the display, and allowing the viewer to count off seconds. In the 12-hour format, "pm" is displayed, which means the alarms can be set to repeat every 24 hours, not 12 hours like most clocks. Should the power fail, the entire display will flash on and off when the power returns, to alert you to the incorrect time readout. A 9-volt battery acts as a backup on power failure to retain all time settings in memory until power returns; it does not count during power failure, but freezes the time registers.

Building the clock in its basic form is easy. The instructions, together with a top-quality PC board very clearly silk-screened to show all part locations and optional switch points, make assembly straightforward. Most parts come in identified envelopes

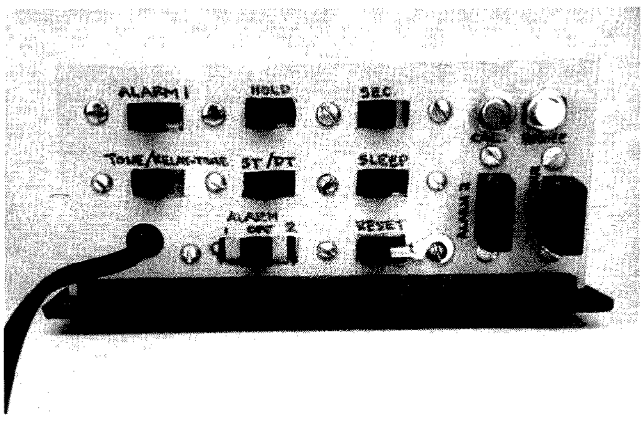

The rectangular cutouts for the switches were cut with a hot knife in the plastic rear panel. A solder lug blocks the reset switch to prevent accidental closure.

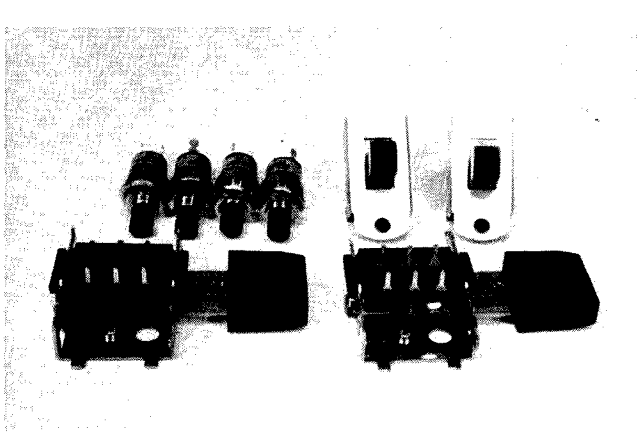

Eight extra switches are available as an option — or use your own switches.

referred to in the instructions as they are required. Even cut, stripped, and formed jumper wires are provided! Although if you're really careful in your soldering you won't need it, two strips of "solder wick" are provided in case you need to remove solder bridges or components. If you've never used solder wick, you'll really appreciate it when you do!

The basic assembly will only take you about 1½ hours, at which time you'll have an operating clock. The stumbling block comes when you try to decide which options you want to include — there are so many! I decided to use the following: 12-hour display, duplicate time, both alarms, tone and relay plus tone, 10-minute reset on alarms, count inhibit, month-day calendar, one-hour relay countdown, forward and reverse time setting, Standard and Daylight Time selection, seconds display, and reset. This took six SPST normally-open push-button switches, six SPST slide switches, two DPST normally-open push-button switches, and one SP 3-position slide switch. Toggle switches could be used instead of slide switches, at a considerable increase in cost. I put the time-setting switches on the front panel, all the rest of the switches on the back panel. It took careful arranging of the switches to fit them on the rear panel, as shown in the Fig. 1 layout. Fortunately, ribbon cable — 20 color-coded wires in a flat parallel cable — is provided in the kit. This allows you to wire between the PC board and the switches in an organized manner, rather than having a rat's nest of wires. You should, however, take the time to plan the switch wiring by making a wiring diagram, such as Fig. 2, showing wire colors. This will help keep the assembly neat, and it will give you a "road map" for any troubleshooting later on. I divided the ribbon cable into two strips of ten wires each (since the colors repeat every 10 wires) and called them "1" and "2". Therefore, my wire colors on the diagram show a number 1 or 2 before the color to designate the wire strip. The other end of each wire, of course, is connected to the proper point on the PC board. The time-setting switches fit nicely on each side of the display on the front panel, with the forward-setting switches on the right side (looking from the front) and the reverse-setting switches

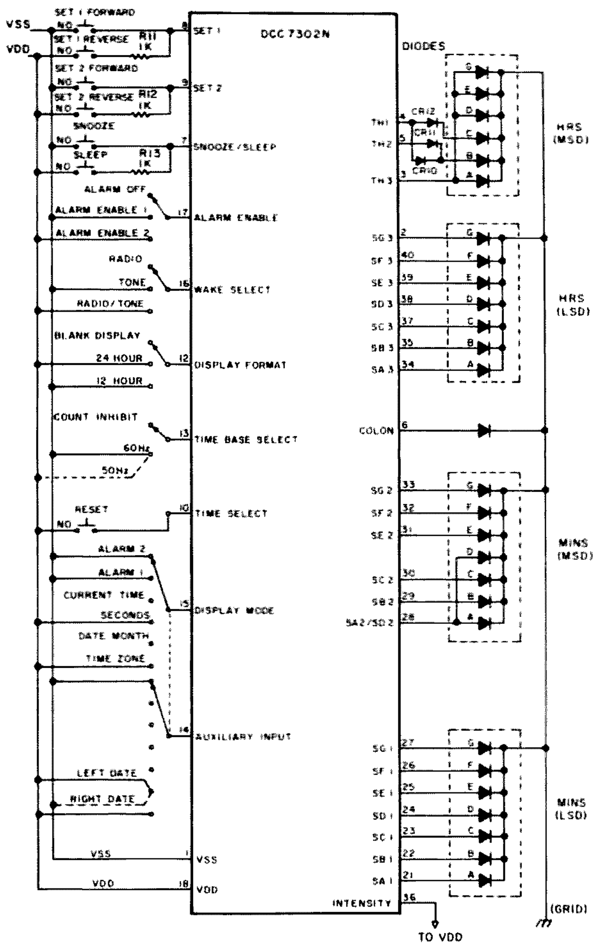

Fig. 3. Generalized circuit.

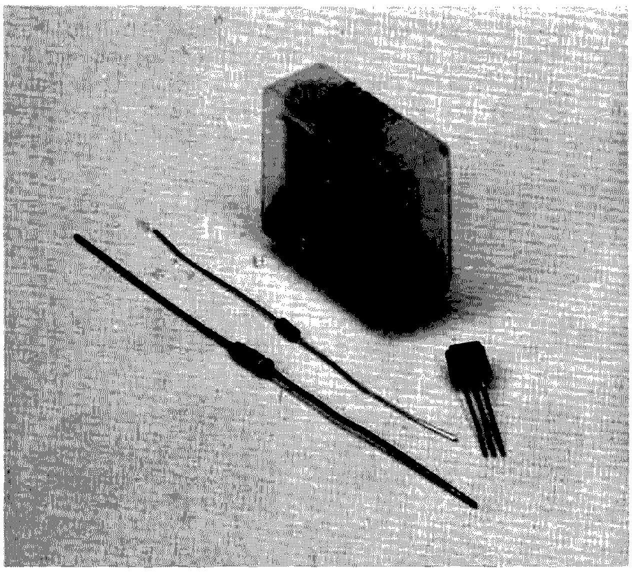

A miniature 700-Watt relay, a transistor, a resistor, and a diode are available as an optional kit for controlling ac or dc power or signals.

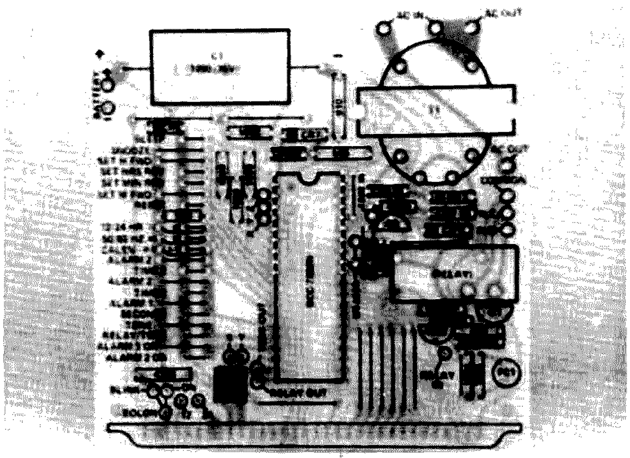

Single-sided PC board holds all components except speaker and switches and is clearly silk-screened on top to show part locations and switching terminals.

on the left.

The relay circuitry is included on the PC board, including jumper points for allowing the normally-open or normally-closed contacts to control either the 117-volt ac line or any external circuit. The relay is activated by either of the alarms or the "sleep" switch. The sleep switch displays countdown time, which can be set forward or backward by the minute-setting switches to any time from 1 to 59 minutes. This counter starts at 10 minutes, and, by leaving the sleep switch closed, it will recycle to 10 minutes after it counts down to 00. This can be used as a 10-minute ID timer for ham or CB use by having a tone or light connected to the normally-open relay terminals. You can also use the "snooze" button to retrigger the alarm automatically every 10 minutes for an hour with alarm 1 or for an unlimited number of 10 minute repeats with alarm 2.

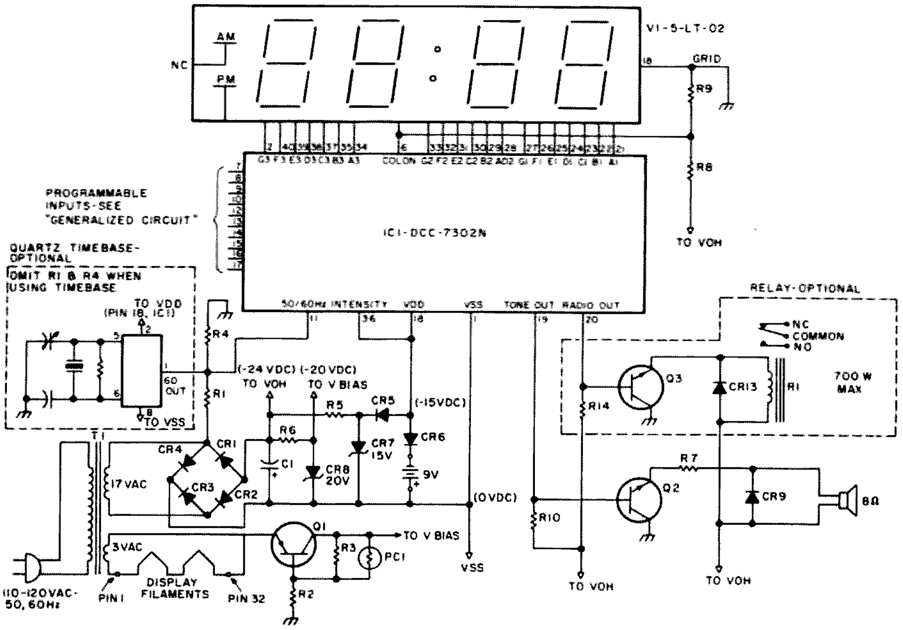

Fig. 4.

I found several peculiarities in this clock chip when compared to others, and you should be prepared for these operational pitfalls in your checkout and use of this clock. While later models of this kit (built in April, 1977) may cover these things in revisions or reprints of the instructions, most were not covered in my instructions:

1. The alarms cannot be triggered by the time-setting switches. You must set the alarm in the specified manner and then, to check operation, advance the displayed time to a minute or two before the alarm time. Then let the clock run until the two times coincide, when the relay or the tone, as selected, will operate. To deactivate the relay or tone, press the snooze button or shut off the alarm enable switch. Also, be aware that the alarms will not trigger when seconds are being displayed.

2. The snooze feature resets the alarm for ten minutes. However, this can't be forced by advancing with the minute-setting switch — the IC must count 10 minutes internally.

3. Don't try to display the calendar with a day-month format. Internal jumpers built into the display provided do not allow this. If you try, you'll get a strange display beyond the ninth of each month.

4. The calendar is programmed in the IC to correctly count the days in each month with February set for 28 days. Therefore, on a leap year, you'll have to advance to February 29 manually. However, since the manual setting is only used for initial setting and February 29, you'll find that as you cycle through February with the setting switch, February 29 will show up every time. Don't be confused by this. To check proper operation, set the clock to February 28 a minute or two before midnight and let the clock count through midnight. The calendar will come up with March 1, just as it should.

5. With all the switching possibilities, there are "sneak circuits" that short out the power supply. If this is done

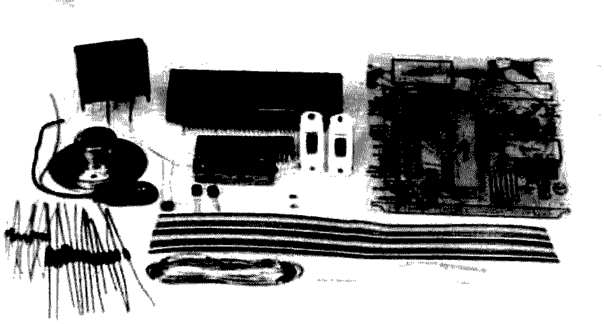

The kit is ultracomplete in its basic form, even including ribbon cable, solder, solder-removal wick, and preformed and stripped insulated jumpers.

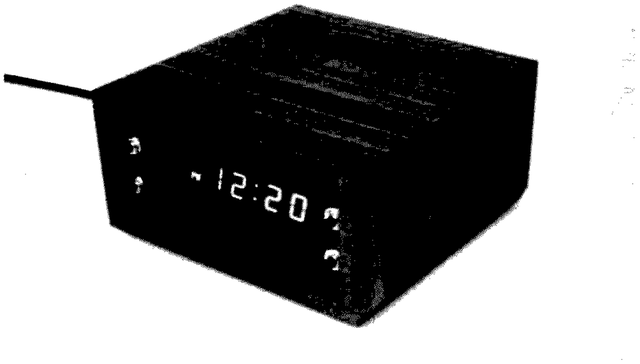

The optional hand-finished solid walnut cabinet with blue or green faceplate imparts an elegant appearance to this very versatile digital clock.

quickly, it only results in a blanking of the display and total reset; left in this condition for more than a few seconds, it is bound to destroy some power supply components. The following simultaneous combinations should be avoided:

(a) Alarm 1 enable and alarm 2 enable

(b) Tone and relay tone

(c) Seconds or duplicate time with alarm 1 display or alarm 2 display

(d) Duplicate time and calendar

It is strongly recommended that you buy the cabinet for this clock. It greatly enhances the appearance of the unit (you can specify a blue or green faceplate), and the front and back panels allow you the space for the switches. The cabinet is designed so that the PC board mounts with screws (included with the cabinet) to the base, and the front and rear panels fit in slots in the base. The top of the cabinet acts as a lid and can be removed completely to get at the works. The panels are easily drilled and cut (I used a hot knife to cut the rectangular holes for the slide switches on the back panel), since they are plastic.

Incidentally, it's a good idea to put some sort of a guard over the reset switch, since, if you activate this switch accidentally (as I did a number of times) after setting in times to all the registers, it's back to square one, and everything must be reset!

If you want a plain digital electronic clock, there are many kits to choose from. But, if you want one that will tell you the time in London, when to identify your station, help you keep calling schedules, turn on the rig, turn on the coffee pot, keep track of the date for log entries, and even switch instantly between Daylight and Standard Time, then the Series 5000 Programmable Clock Kit is for you! ■

Loran Joly WBØKTH/4
432 Central Avenue
Mora MN 55051

More CW Fun With Break-In Keying

—*how it works*

The basic idea of break-in keying is very simple — automatic switching between transmitter and receiver. Many hams are familiar with VOX CW, which is a form of break-in keying because it switches the receiver/transmitter combination back and forth as CW is sent and received. There is, however, a delay in the switching of the receiver. This is not true break-in.

With a true break-in system, reception is possible between each dit or dah of every letter sent. This is an invaluable aid to the traffic handler, for the transmitting station can be interrupted at any moment for a fill.

Block diagrams of the two most popular QSK (break-in) systems are shown in Figs. 1 and 2.

In Fig. 1, a T/R switch is used to block the transmitter rf from going into the receiver.

Fig. 2 shows the connections for a unique break-in system. The antenna system is actually connected and disconnected to the receiver and transmitter by means of a high-speed vacuum relay or a high-current reed relay. Although this system is more expensive to construct, almost all cantankerous idiosyncrasies of earlier T/R systems are eliminated.

My own experimentation has covered both types of break-in systems. Once adjusted properly, both serve the operator very well. A QSO with CW break-in is a totally new experience. As you are sending, you can listen to the QRM that the receiving operator must discriminate against. If both stations have full break-in, the operator may break and ask questions any time he pleases. Both operators speak up and send as they wish, with no worries about "doubling" on top of each other.

I have explained the operation and benefit of such a system. If you want to use one, the decision is up to you. ■

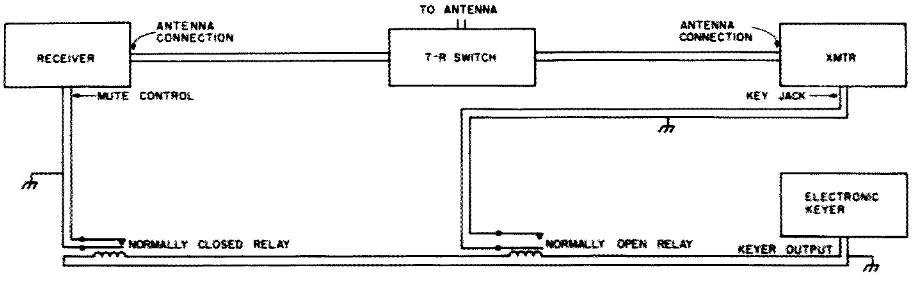

Fig. 1.

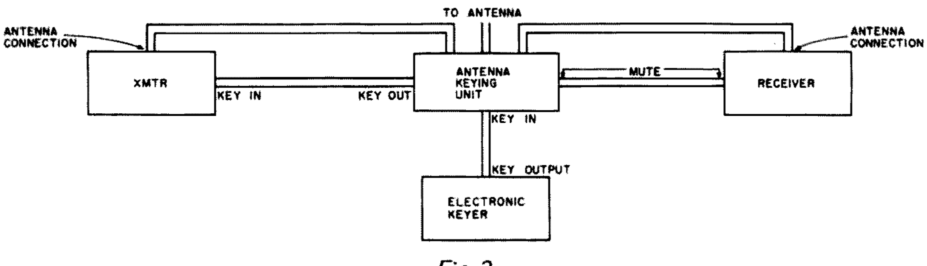

Fig. 2.

David J. Brown W9CGI
RR 5, Box 39
Noblesville IN 46060

Poor Man's Cruise Control

—better than the commercial jobs

Is your automobile capable of indicating engine rpm and controlling its own speed on those long trips? The unit described here will do just that and for much less cost than the units going on the market for $75-100.

When I decided to build this unit, my design goals were as follows:

1. Even though I have a clock face readout tachometer in my Toyota SR-5, I would eventually like to have digital readouts on many of the instruments.

2. Since even good units for speed control already on the market do not really work well over bumpy roads (and this really isn't where you want a speed control), I would forgive the slight errors that might arise under those conditions due to wheel hop and slippage, etc. This allows a given rpm to represent a given speed for any gear you might be in.

3. Due to the fact that I had an article in mind as well as a unit for my car, the speed setting (entry point into automatic control) had to be either by speed or rpm and not by any phony codes fed in by switch.

4. I drive by tachometer, but many don't. With design goal 3 in mind, I chose the entry point to be by speed, so the driver could watch his speedometer and enter the auto mode where he chose.

5. After pondering item 4, building up the first prototype circuits, and riding around in a friend's van equipped with a speed control for awhile, I could see where entry without multiple switches (my original idea) and a "resume" function to return to auto control at the last speed entered by a "set" switch would both be nice to have. The entry method of the system, Phase 2, was very easy (single switch), and the resume feature fell right in when I got ready to interface the system into the car, as you will see.

6. The electronics of the system must be complete and as much compatible with all automobiles as possible, but I knew I could only present the mechanical parts in general terms, due to the many different types of gas-feed systems on the different cars.

With all this in mind, the system shown here was developed in three phases which I will explain here, because, in doing so, I may help you see how the final system works. Bear in mind, any electronic tachometer is only a low-frequency counter. This is the first phase of the system that I worked on. The input circuit is buffered by a 74121 one-shot to take the "spike" from the ignition coil low side and shape it up into a nice pulse for use by the later TTL circuits. The counter portion is similar to any other counter and can be dealt with as such. The control circuits, however, are quite different to accommodate the very different job the counter will be doing. The clock frequency crystal, F1, is chosen at many times the necessary clock output frequency, F2, for the same reason it is chosen that way in a regular counter. When you go to set or "trim in" the crystal oscillator, by dividing down to the desired F2 frequency, you also divide down any error in setting and any drift with temperature and time, the same as a bench-type counter does.

This means, also, that you must choose your crystal frequency in a reverse order, working back from the desired gate frequency, F2, and using the formulas in Table 1. This allows the unit to be used with cars having different firing arrangements due to different numbers of cylinders. What you are creating with the clock is a gating "window" that, while open, will count a given number of pulses and allow them to be displayed directly as rpm, even though you are reading the window many more times than once a minute. Obviously, if the readings were taken only once a minute, it would be worthless as a tachometer, much less a speed control.

A couple of features may not be evident if you are not familiar with speed controls. The unit operates off the car battery source (via a regulator) from a line that is on only when the key is in the IGN, or ignition, position. This allows for a failure in the unit, because, in most of the key-lock steering wheel models of today, you want to be able to panic shut down the unit by going to the ACC, or accessory, position and not the off, or wheel-lock, position for safety's sake. Another safety feature is that the system will drop out of the automatic mode the instant the brakes are applied hard enough to bring on the brake lights. I will also show how you can drive this defeat system off the turn signals or another switch to add a deceleration-before-turn automation to your system, but I have not yet done this on my automobile. With this two-diode addition, you revert to manual mode the instant the turn-signal-lever switch closure is sensed. Some may not want this feature, as using your turn signals for lane changing would defeat your automatic speed control. Also, you may wish to in-

clude somewhere in your own mechanical connection a switch of sorts that allows you to press the gas feed to speed up (overriding the auto control) while automatically resuming auto control when you take your foot off the gas. This is very handy for passing another vehicle.

Continuing with the system description, the counter BCD outputs go in three directions. Taking the easiest way first, the BCD lines are fed to wherever you have chosen to mount your tachometer readout devices. As I said, I have a tachometer already, so for me this is just a plug on the control unit that I can plug into the universal readout display. It contains the same things your display will need in the form of a decoder and seven-segment display for each decade of the counter that is monitored. Since only 10s, 100s, and 1000s are monitored in this system, you need only three decoders, but I would use four readouts to avoid confusion. Hardwire the far right, or units, digit to display a constant zero. This way, the display is a direct-read device that you don't have to mentally add a digit to. There are a lot of reasons for deleting the units – the flashing display is distracting, it's not really used or needed, etc. – but an example from my system may be the easiest way to explain my design reasoning. Out on the highway in fifth gear and running at 40 mph, the engine in my car is turning approximately 2000 rpm. This means about 50 rpm/mph. I want you to remember this, because, when you get your system going and have all the mechanical linkages in place, you may find the system has a "hunting" effect you find undesirable. In this case, the 10s latch and comparator can be removed or deleted and the 10s counter used only for the display (for tune-ups, idle set, etc.). If you use only 1000s and 100s in your comparison, and I am assuming an rpm to mph ratio like mine, the system will detect and correct for errors of about 100 rpm. This, in my automobile, is about 2 mph, and is as good as most of the units you can buy. Having never torn down one of their units (or owned one), I may use similar design logic, but I doubt that they use the lower cost TTL ICs that you can so readily get ahold of now.

1. Determine the number of coil pulses from the coil per revolution of the engine from your car manual.

2. Using 3600 rpm and 4 pulses per revolution as an example, the 36 number must be counted once per "window."

3. (a) $\dfrac{3600 \text{ rev.}}{1 \text{ min.}} \times \dfrac{4 \text{ pulses}}{\text{rev.}} \times \dfrac{1 \text{ min.}}{60 \text{ sec.}} = \dfrac{240 \text{ pulses}}{\text{sec.}}$

(b) $\dfrac{1 \text{ sec.}}{240 \text{ pulses}} = \dfrac{4.1666\cdots \times 10^{-3} \text{ sec.}}{1 \text{ pulse}} \times \dfrac{36 \text{ pulses}}{\text{per window}} = \dfrac{.15 \text{ sec.}}{\text{window}}$

(c) $\dfrac{.15 \text{ sec.}}{\text{window}} \times \dfrac{4 \text{ window periods}}{\text{period of (F)}} = .6 \text{ seconds}$

(d) $\dfrac{1}{.6 \text{ sec.}} = 1.6666\cdots$ cps (x 10 for last clock divider) = $16.66\cdots$ Hz

Input to last clock divider = $16.66\cdots$ Hz.
If a divider using five 7490s is used, a $1.666\cdots$ MHz crystal is required.
Just multiply the last 10 F frequency by your divider chain = crystal.

Table 1.

Going now in the tougher direction (only from the amount of circuitry, not complexity), you can follow the BCD lines to the latches. These latches (7475) are often called two-step memories, or simple memories, and this is exactly the function they perform for us. Again using an in-car example, as you speed up away from a stop using the manual gas feed, you eventually come to the steady cruising speed you wish to maintain. The tachometer has been following this by a fluctuation in rpm (as you shift) and a steady rise in rpm to the leveling-off point. When you reach cruising speed, a push on the "set" push-button causes the latches to momentarily accept the rpm (in BCD form) at that time and speed. The one-shot in the "set" push-button line accomplishes two functions. One, it buffers the switch and eliminates the mechanical bounce that most inexpensive switches have. Two, it opens the memory for new data input for a finite time, because you may try, but you cannot hold an absolutely constant rpm with your foot. That's what speed controls are all about anyway, right? The one-shot allows the data available right at the end of one-shot time to be entered into the latches. Now, the memory will store this "speed" until either a new entry takes place (entry by set button) or the power to the unit is removed.

From the latch ICs, the stored BCD data enters a BCD loop by going to a set of BCD comparators (7485). Several authors, myself included, have explained exactly how these ICs work, so I won't go into detail. For all you analog (linear) fans, just compare their function to a bridge, or make A = B. B, in this case, is the latch data, and A is the BCD I will cover next. Note that the counters never stop counting each time the input control gate is open (enabled). The third direction the BCD takes (of the three mentioned earlier) is to the A input side of the comparators. This is the side that tells the comparator "where am I" in rpm (BCD form) terms. The B side tells the "where should I be." When these are compared at the proper clock rates, the comparator outputs on one of three lines. The desired line in this case is an A = B condition, where engine rpm equals the desired rpm (and, thus, the desired speed). Another output is A > B, or the engine is under the desired rpm, indicating that the mechanical-accelerate device should come on.

That's really all there is to the electronic part (control unit) of the device, except for some buffering of sorts to get from TTL low levels to a higher power capability and the mechanics themselves. I will now present some ideas on the mechanics. I say "ideas," because, depending on your automobile, some or even all of them may not work.

I can advise, first of all, that, if you are the type of person who is never under the hood of your own car, either obtain competent help at this point, or just enjoy reading this article or building it for some other purpose. The myriad of pollution-control junk and complex wiring under the hood of a 1970s automobile is enough to confuse anyone. The inherently unsafe situation created by an improperly installed or functioning speed control must not be overlooked, either.

On the other hand, if you are reasonably adept at doing your own general automobile

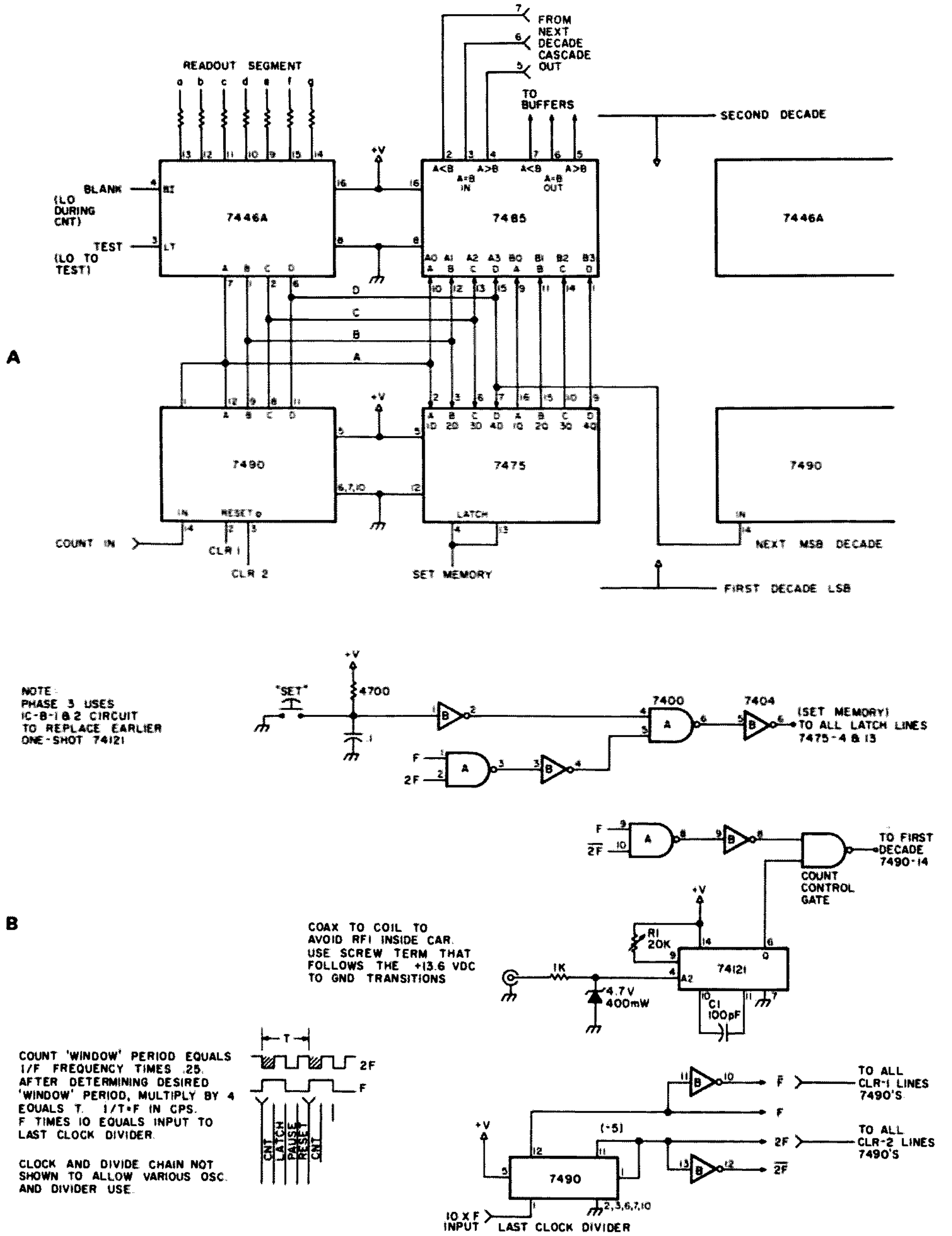

Fig. 1. (a) Counter section. Note: On MSB7485, tie pins 5 and 7 to ground and pin 6 to +V. (b) Clock and control section. +V = +5 V.dc regulated ±.2 V.

maintenance, figuring out the how and where of this project should be no problem. That leaves only the sheet metal, brackets, etc., and really no more than the average chassis working tools and experience should get you through that in good fashion. I said before that this is a system, so do build and check it out that way. Small lamps or LEDs on the output control wiring points will let you check out the control package using an audio oscillator as a phony engine or pulse source. Likewise, grounds applied to the mechanical relays at their input from control unit points should allow you to run up the engine controls (up, down, hold) sitting in your driveway. Note: Don't work in a closed garage and end up failing to realize the fruits of your labors. Also, don't hold the higher engine rpm (1500 rpm and up) too long, as few cars these days cool well enough to handle it unless the car is moving and cramming air into the radiator slots.

With the system installed and independently checked out, cable up the unit to the mechanics (rotor cable with good insulation and dressed away from any hot engine parts should do the job as well for you as it did me), and go out for a test run. I highly recommend daylight and light traffic on an interstate for this. One, it's where the unit is the most useful. Two, you don't have back bumpers, traffic lights, or unexpected curves suddenly staring at you if you get carried away with the jollies of having an autopilot and a readout to watch. The only electronic calibration is setting the gate or window time by setting the crystal "on the nose," and this is done on the bench before you install the control unit package. Try to avoid hot or heat-trap areas when installing the control unit, as the unit creates its own heat even using the low-power options of TTL where available, and ICs do have limits on being externally fried, you know. The rest is mechanical adjustment, and I am truly sorry Detroit and the rest of the world have not gotten together on things like fuel flow and feed methods in cars. The mechanical drive, hold, and defeat mechanisms will have to be worked out in each of your own cases.

I can offer here, again, only ideas based on my own system and must let you resolve your own differences. The drive mechanism on my system is an old auto-tune motor from some piece of surplus electronics gear and is plainly marked 28 V dc. But, true to the ham tradition, it worked fine on 13.6 V dc car voltage, so I used it! It bears no name, and I don't remember what form of beast it was removed and saved from, so I am of little help there beyond giving you an idea of things to try. I venture the junk yard wiper motors may also work — but a bit of overkill perhaps — and beware of the holding switch internal in some that returns the motor to wiper-down position regardless of other switch power applied. This motor arrangement then becomes both my speed-up and slow-down control by virtue of it being a dc motor and, therefore, reversible. Since the system must rotate the throttle shaft to a position and then hold it, I first tried a pair of hefty transistors directly driving the motor, one for each direction. By using the system as shown in

Fig. 1, including the LEDs and LED resistors, and coming off the "wrong" lead of the unit to account for the unintentional inversion (buffer on-output device off) caused by this, I was able to constantly drive the motor back and forth over a small range of the 10s rpm resolution I was detecting and using at the time. The system worked (sort of) and was terrifically smooth. So, under the right conditions in your system, you might try it. But, for my part, I smoked a motor in just under a week of off and on driving. I forgot that motors found in these surplus units have no doubt seen much use and some abuse and, also, that they were never intended as continuous-duty devices. One and/or both gave me Murphy's "gotcha." This ended the system Phase 2, the first to really go on the car. The disengage mechanism was nothing more than a removal of the common wire of my 3-wire motor (by relay).

Phase 3 I feel to be a cruder method, but at least it works. Leaving the throttle-return spring in place in both systems, Phase 3 uses the motor to drive the throttle shaft back and forth, the same as Phase 2, but only when correction is demanded. I lowered the duty cycle quite a bit by only using 1000s and 100s and still maintained the roughly 2 mph tolerance mentioned earlier. The only device difference comes in the form of the hold-in device. I had a small solenoid (again 28 V dc) of unknown parentage. I used the solenoid as a brake. My throttle linkage is a cable run to a lever plate on the throttle shaft, like a lot of other cars these days. Gone are the days of the linkage rod and 2-barrel anyone could really work on. There is enough of the bare cable showing on most cars to form a bracket that holds the solenoid and positions it. You want to be able to form the plate as one half (fixed) of the brake, and the piece moved by the solenoid forms the other half of the brake. This means the throttle cable passes between the two plates (covered with cork like that used to pad ashtrays). When the solenoid is on, it forms a clamp on the throttle cable to hold a fixed position. It's crude, but effective! Remember, this solenoid must in some way be wired to be controlled by the brake light line so that it instantly releases when brakes are applied. In most cars, the 13.6 V dc that lights the brake lights is available at the output of the brake light switch (which is hiding indoors these days, behind the brake pedal). On some cars, this may be a ground with brakes on. The wiring I leave to you, as you will know or check your own options.

This seems awfully light on the mechanics, but maybe someday all cars will be electronic fuel injection (VW owners, have a ball). The increased efficiency, economy, and just plain smoothness of these injection systems may force this soon, but, in the meantime, the interface must remain a mechanical kludge. I have enough shaft extension to direct motor drive with a coupler, and you may not. Add a hundred or so other variations car to car, and you can see why all my mechanical help is in the form of ideas only.

If you have any troubles on the electronics package, an SASE to me will bring as speedy a reply as you make your question complete. For the mechanics, don't even try me — call a mechanic!

While you wait on parts, discuss it with your mechanic and he can help you a lot, verbally or in the actual doing. Remember, this is a 2-part system, and he doesn't need the electronics package to do his part any more than you need the car to check your package! ■

propagation

by
J. H. Nelson

EASTERN UNITED STATES TO:

GMT:	00	02	04	06	08	10	12	14	16	18	20	22
ALASKA	14	14	7	7	7	7	7	7A	14	14	14	14
ARGENTINA	14	14	7A	7	7	7	14	14	14	14A	21	21
AUSTRALIA	14	14	14B	7B	7B	7	7	7	7	7	14	14
CANAL ZONE	14A	14	7	7	7	7	14	14	14	14	14	14A
ENGLAND	7A	7	7	7	7	7	14	14	14	14	14A	14
HAWAII	14	14	14B	7	7	7	7	7B	14	14	14	14
INDIA	14B	7B	7B	7B	7B	7B	14	14	14	14	14	14B
JAPAN	14	14	7B	7	7	7	7	7	7	7A	14	14
MEXICO	14	14	7	7	7	7	7	14	14	14	14	14
PHILIPPINES	14	14	7B	7B	7B	7B	7B	7	7A	14	14	14
PUERTO RICO	14	7A	7	7	7	7	7A	14	14	14	14	14
SOUTH AFRICA	7	7	3A	7	7B	14	14	14	14	14	14	14B
U. S. S. R.	7	7	7	7	7	7	14	14	14	14	14	14B
WEST COAST	14	14	7A	7	7	7	7	14	14	14	14	14A

CENTRAL UNITED STATES TO:

GMT:	00	02	04	06	08	10	12	14	16	18	20	22
ALASKA	14	14	7A	7	7	7	7	7	7A	14	14	14
ARGENTINA	14	14	14	7A	7	7	7A	14	14	14	14A	21
AUSTRALIA	14	14	14	14B	7B	7	7	7	7	7	14	14
CANAL ZONE	14A	14	14	7	7	7	7	14	14	14	14	14A
ENGLAND	7	7	7	7	7	7	7A	14	14	14	14	14
HAWAII	14	14	14	14B	7	7	7	7	14	14	14	14
INDIA	14B	14B	7B	7B	7B	7B	7B	7B	14	14	14	14
JAPAN	14	14	14	7	7	7	7	7	7	7A	14	14
MEXICO	14	14	7	7	7	7	7	7	7A	14	14	14
PHILIPPINES	14	14	14	7B	7B	7B	7B	7	7A	14	14	14
PUERTO RICO	14	14	7A	7	7	7	7A	14	14	14	14	14
SOUTH AFRICA	7	7	3A	7	7B	7B	14	14	14	14	14	14B
U. S. S. R.	7	7	7	7	7	7	7	14	14	14	14	14B

WESTERN UNITED STATES TO:

GMT:	00	02	04	06	08	10	12	14	16	18	20	22
ALASKA	14	14	14	7	7	7	7	7	7	7	7A	14
ARGENTINA	14	14	14	7A	7	7	7	14	14	14	14	21
AUSTRALIA	21	21	21	14	14	7A	7	7	7	7	14	14
CANAL ZONE	14A	14	14	7	7	7	7	14	14	14	14	14
ENGLAND	7	7	7	7	7	7	7	7	14	14	14	14
HAWAII	14A	21	21	14	7	7	7	7	14	14	14	14
INDIA	14	14	14	7B	7B	7B	7B	7B	14	14	14	14
JAPAN	14	14	14	14	7	7	7	7	7	7A	14	14
MEXICO	14	14	14	7	7	7	7	14	14	14	14	14
PHILIPPINES	14	14	14	14	7B	7B	7B	7	7A	14	14	14
PUERTO RICO	14	14	7A	7	7	7	7	14	14	14	14	14
SOUTH AFRICA	7	7	3A	7	7B	7B	7B	14	14	14	14	14B
U. S. S. R.	7	7	7	7	7	7	7A	14	14	14	14	14B
EAST COAST	14	14	7A	7	7	7	7	14	14	14	14	14A

A = Next higher frequency may also be useful
B = Difficult circuit this period
F = Fair
G = Good
P = Poor

august

sun	mon	tue	wed	thu	fri	sat
		1 G	2 G	3 G	4 G	5 G
6 F	7 F	8 F	9 G	10 G	11 G	12 G
13 G	14 G	15 G	16 P	17 F	18 G	19 G
20 G	21 F	22 G	23 G	24 F	25 P	26 P
27 P	28 F	29 G	30 G	31 F		

September 1978 $2.00

73 Magazine for Radio Amateurs

W2NSD/1 NEVER SAY DIE

editorial by Wayne Green

ATLANTA, DALLAS, ETC.

The last few months have been exceptionally busy and exciting for me. They have taken me to several countries and a number of hamfests and computer shows. More important, in the long run, are the political implications . . . and by that I mean with regards to the future of amateur radio . . . of these last few weeks.

A year ago, in a newsletter to the ham industry (dated May, 1977), I outlined the dangers of the coming WARC conference in Geneva. Being one of the few surviving delegates from the last WARC conference (1959), I perhaps have a little more perspective on the whole situation than people who have not been through one of those conflicts. That was twenty years ago and most of the people involved have either died or retired by now, so we have a new generation of innocents preparing for what promises to be a bloodbath.

Those few of you readers who have hung in there with me for the last twenty years or so have read all of this before. Hmmm . . . I wrote my first editorial in a ham publication just 26 years ago. Luckily I didn't suspect what I was getting into.

To go over history very briefly. In 1959, I arrived at Geneva to meet with the delegates from over 100 countries of the world. I found that though a few were amateurs, they were representing commercial or military interests, not amateur. The only country that permitted amateurs to be represented on their delegation was the U.S., with me and a chap from the ARRL being it. In reading over the official positions of the other countries, I found that few had any respect for amateur radio and that most were proposing drastic slashes in amateur frequencies.

In general, we were in a little better shape with the European countries, with the worst positions for us being proposed by Australia and India. Australia was demanding that all ham bands be cut to 50 kHz . . . and this was their official proposal. India wanted them cut to 20 kHz. Bless India.

Through an almost unbelievable stroke of good fortune, the U.S. managed to get reallocations in the 3-30 MHz bands put off until the next conference, scheduled for 1969. If a writer used a coincidence as weird as the one that happened, he would be laughed at. The U.S. was not trying to save the ham bands by this move; they were just trying to hold on to the disproportionate number of frequencies they had grabbed for many services at Atlantic City in 1947 and at previous ITU conferences.

The fact is that, even though the official U.S. WARC proposal called for continuing the ham bands as they were, I found that the members of the U.S. delegation had private orders to replace any losses to their service by taking frequencies from the nearest ham band. We had no friends at that conference, believe me . . . and the most predatory of all of the delegates turned out to be hams wanting to take ham frequencies for their employers. This is one of the reasons I laugh a little when I hear an ARRL president tell a gullible audience that we don't have to worry, hams on the foreign delegations will help us protect ham frequencies. Ha.

By 1965, the newly-chartered African countries were joining the ITU and swinging the balance of power. By 1966, I became concerned enough about the situation to look into it and see what I could do. I had been visiting the ITU pretty regularly, keeping in touch with the hams there and getting the inside information on what was really going on. I visited the ITU in 1958, 1959, 1961, 1963, 1965, and 1966. My visit in the spring of 1966 made it seem important to me to arrange for a trip to visit some of the countries involved and see some of the top ITU people.

That summer I went to Africa and visited the hams in Kenya, Uganda, Ethiopia, Sudan, and Egypt. While in Addis Ababa, I had the opportunity to get together with the just-replaced secretary-general of the ITU. I talked with him about the importance of amateur radio to emerging nations as an inexpensive source of technicians, and he thought this was an important concept which should be brought to the attention of the current secretary-general, an Indian. I DXed my way up to India, stopping off on the way to visit and operate in Lebanon, Syria, Iran, and Afghanistan. I visited Iraq, but was unable to get permission to operate there.

Mr. Sarwate, meeting me in Delhi, was most interested in what I had to say about amateur radio and its benefits to new nations. We discussed getting the ITU to back a plan for developing amateur radio in these countries, and I agreed to

73 Magazine is published monthly by 73, Inc., Peterborough NH 03458. Subscription rates in the U.S. and Canada are $15 for one year, $26 for two years, and $36 for three years. Outside the U.S. and Canada, write for rates. Second class postage paid at Peterborough NH 03458 and at additional mailing offices. Publication No. 700420. Phone: 603-924-3873. INCLUDE OLD ADDRESS AND ZIP CODE WITH ADDRESS CHANGE NOTIFICATION. Microfilm edition—University Microfilm, Ann Arbor MI 48106.

write a set of rules for small countries which would encourage amateur radio to develop. Many countries were completely unaware of amateur radio and, even if they were interested, didn't know how to get it going.

Upon returning home, I set about preparing a set of regulations for the ITU to recommend. Before I could get them to Mr. Sarwate, he had the bad luck to drop dead and I found myself back on square one. I would have liked to take a trip to visit his replacement, but when I returned from my three-month trip, I found *73 Magazine* in terrible shape. We were over a month behind in publication and virtually bankrupt. It took me a couple of years to get *73* back into good enough shape so I could even think of leaving it for more than a few days.

My visit to the ITU in 1968 confirmed that the African nations had taken control. The European countries still had enough clout to prevent the scheduled 1969 WARC, but not enough to hold their frequencies if the conference had been permitted. By the '70s, the Europeans couldn't even prevent the 1979 conference, though they knew it would be a terrible experience.

The African countries have been voting in a bloc to rectify the frequency situation. Their view is that 10% of the world grabbed 90% of the frequencies in the past, and they, by damn, are now going to get their share and then some. They flexed their muscles in 1971 at the satellite conference when they wiped out all of the ham microwave satellite allocations. We went in with 239,249 MHz of ham satellite channels, enough so every ham in the world could have been in contact with any other via a set of three synchronous satellites within a few years. We lost every single Hz of those allocations. The report is in *QST*, where the ARRL admits that they went into the conference unprepared and lost everything. Oh, we did keep a little bit of the VHFs, but not enough to be of much use . . . and the real future of amateur radio, the microwaves, were cut off.

The white countries ran into this African buzz saw again in 1973 when the maritime interests got together for an interim ITU conference and the African bloc wiped them out, ignoring all technical advice and grabbing every channel they could—even the totally landlocked nations. What will they be doing with these frequencies? None of our business, they say, and if they want to rent them out or sell them, that's their prerogative.

JORDAN

During my visit to Jordan in 1970, I talked with King Hussein about the advantages to his country of amateur radio. I explained about the hobby as a way of getting almost free technicians, particularly as compared to the cost of bringing in Swiss or German technicians and engineers, which often run to $500 a day or more. He liked the idea and had me explain it to his government.

They started right in with this idea, even though Jordan was in the middle of a civil war between the Palestinians and the Jordanians. They set up ham stations in every youth club in the country and got the kids interested in amateur radio. His Majesty asked me to come back in 1973 and see what had come of my idea, and I met about 500 enthusiastic Jordanian hams, all in their teens, as I visited ham clubs from one end of the country to the other. They were just about to start work on the first Jordanian electronics factory . . . something which would have been impossible just three years before.

Just recently, I noted a piece in the *Herald Tribune* quoting a communications student at the University of Amman! From zero technicians to communications graduates in so few years . . . it shows what can be done.

ARMA

When ARMA (Amateur Radio Manufacturer's Association) was first formed in 1977, I brought up the problem of getting African votes for amateur radio at WARC, but the manufacturers were too busy worrying about bylaws, who was going to be president of the group, FCC hassles, etc. This was why I put the information on the subject in my May, 1977, newsletter to the industry. I hoped that something would come of it at their Atlanta '77 meeting . . . nothing did.

I brought it up again at the next ARMA meeting in Vegas during SAROC '78. Nothing happened again. Though I was elsewhere during the Dayton Hamvention, I did get a tape of the ARMA meeting and nothing more happened. With Atlanta being the last meeting of the year, I sent out one more newsletter in May, 1978, outlining the problem and my proposed solution.

ATLANTA

HR Report (I called it half-right reports, but then I am often accused of exaggeration) said . . . "Wayne Green will present a WARC '79 'progress report' to the ARMA meeting in Atlanta next week. Since he has yet to participate in any of the U.S. WARC preparation that's been going on in Washington since 1975, it should be an interesting presentation. Noel Eaton VE3CJ, who has attended WARC preparation meetings throughout the world for the IARU, will also be present and may contribute some appropriate observations."

Hopefully, the sarcasm of the above is not lost on you.

Indeed, I did report to ARMA, though not on WARC directly . . . as *HR* very well knew. In view of the lack of support for the U.S. position at WARC, I didn't think it worth a lot of time to argue endlessly over it. What a waste of time. I presented my perspective on the possible outlook for WARC, and I played several minutes of a tape recording I had made four days earlier in Geneva when I interviewed one of the hams at the ITU. The tape is unofficial, so I can't quote it directly. Visitors to *73* or to some of my talks at hamfests will have a chance to hear it. The impact is strong: I was unable to find anyone at ITU who held out much hope for ham bands after 1979. The idea of a mission to Africa to interest countries in the value of amateur radio to them, with the example of Jordan to show, was deemed the only hope.

ARMA also listened to Eaton, and I also have a tape of that for those interested. He reported that the IARU, the international arm of ARRL, had approached many African countries for support at WARC. That sounded good. ARMA members pushed for more details, which were finally drawn from Eaton. It seems that the IARU has worked *only* in countries where they already have an IARU member society. Obviously these are countries where they already have an IARU member society. Obviously these are countries where amateur radio is relatively well developed and not a serious problem in the first place. Eaton was asked about contact with the so-called "black bloc" . . . no, none of them, only the IARU member countries, and those on a lower level, not on top, where it counts.

After hearing that, ARMA voted overwhelmingly (one nay) to support a mission to Africa and to fund it by asking amateurs and the industry to send in $10 to $20 a week each for a period of three months. With the full cooperation of the industry, this would more than provide the $20,000 a month a mission would cost.

Joe Brunzo of *Ham Radio* magazine volunteered to prepare a letter to be sent to the industry within the next few days to get the money started. I discussed this with him, pointing out that, in view of *Ham Radio* magazine's rigid support of ARRL policies, he might not be permitted to prepare the let-


73 magazine LOOKS AT

- ARMA Trade Mission
- New ARRL Law
- Atlanta

Wayne Green W2NSD—Editor/Publisher May 18, 1978

NEXT YEAR HAS BEEN CANCELLED

The ham business is going along pretty well these days Telex picked up the Hy-Gain ham empire, lost when Hy-Gain didn't plan for the future of CB as many people forecast it Even the underground CB amplifier manufacturers are desperately trying to get into the ham business as a means of survival Most ham manufacturers are having more problems with keeping up with orders than looking for more business. With very few exceptions things are going great and the worries are over immediate problems, not what is going to happen next year or what happened last year.

How much serious thought have you given to what you would do if amateur radio were totally cancelled next year? Whether such a possibility is a remote chance or a sure thing depends upon whom you consult My own contacts are knowledgeable and wide in this field and I can say that I know of no one involved with the coming ITU conference next year who holds out much hope for our survival

Many amateurs point out that certainly the ARRL is aware of this and must therefore be working hard to do something about it . to prepare While this does seem both likely and reassuring, the League has had a clear history of not preparing for these ITU meetings in the past and there is no hint that they are doing anything this time

One has merely to consult the report of their representation of amateur radio at the ITU satellite conference in 1971 This report was published in QST, but in very fine print in the back, so most League members missed it The report was that amateurs went into the conference with satellite ham bands allocated in eleven UHF bands for a total of 237,249 MHz of frequencies This was enough to allow amateurs to consider putting up a set of synchronous satellites which would permit every amateur in the world to talk with any other via satellite and relatively low power UHF ham gear

And what was the result of this ITU allocation conference as reported in QST? Buried in the back pages in fine print was the report that they lost all but 5 MHz of those allocations That's right, they went in with 237,249 MHz of ham satellite UHF frequencies and came out with 5 MHz Obviously this cut off forever most of the future development of amateur radio . unless there is some question in your mind about the development of microwaves and satellites as being the future of communications

The QST report lamented that the ARRL had not made the necessary preprations for the conference Indeed, in light of the things that happened, it was obvious that even a modicum of preparations could have substantially changed the outcome I see no sign that the League has learned from their debacle

Exactly what ham bands did we lose in 1971 for satellite operating? We lost 50-54 MHz completely. We lost 146-148 MHz We lost 220-225 completely We lost 420-435 and 438-440 MHz, keeping just 3 MHz of that band out of the 30 MHz we had going in We lost everything above that everything the microwave horizons of amateur radio were wiped out completely

Every indication is that unless something is done and done immediately the ham short wave bands will go the same route as the UHF bands and for the same reasons I explained this situation in a letter to advertisers dated May 1977 and it fell on blind eyes No one did anything about it at Dayton last year, or even at the Atlanta ARMA meeting Now we've had another Dayton ARMA meeting with nothing more than some infighting and jostling, and nothing concrete accomplished The very last chance to do something will be at Atlanta

LAST CHANCE: ATLANTA

There are two major moves that the ham industry must make if it wants to take any positive action toward survival The alternative is the ARRL route of just letting things happen and hoping for the best as we did in 1971 . Well, we lost 99 99684% of our satellite frequencies at that ITU meeting If we suffer the same loss on the short waves we would come out of the meeting with 109 4 Hz of ham bands in which case amateur ingenuity with narrow bandwidths would be called into play

What can be done? The problem, of course, as reported in QST, was the ITU system of one vote for each country With the African and Asian emerging nations now in the majority, they are calling the shots There is little reason for these countries to voluntarily give up exceedingly valuable short wave frequencies for what they consider as an American hobby This calls for a personal sacrifice on their part for something which is of no interest to them

The real fact is that these amateur bands could be the single most valuable resource these countries could have in radio spectrum Jordan proved that within three years a very small and poor country could develop enough radio amateurs to make it possible for them to get involved in the manufacture of radio equipment In just three years Jordan went from having zero hams to having over 500 licensed amateurs, almost all teenagers, and most of them thus interested in technical careers

With imported technicians and engineers costing up to $1,000 per day, and few available at much under $200 per day, emerging nations can't afford much in telephone or radio communications development Thus both business and government work is hobbled by poor phone operation and slow international communications A corps of interested hams in a country make it possible to get a lot

Here's Helen Harris W1HOY/KP4 on the left, me, and Sam Harris W1FZJ/KP4 on the right. Sam had a serious bout with lung trouble last year, but is back in fighting trim now. He's stopped smoking. For newcomers to amateur radio, Sam was the chap who invented the first parametric amplifier—he built it to work on 6m—and he was the promoter of a series of moonbounce developments, including the use of the 1000-foot dish at Arecibo for 1296 MHz ham moonbounce a few years back. Sam runs the lab at Arècibo, the world's largest radio telescope.

I first visited Sam when he was W8UKS out in Burton, Ohio, when we were both involved with 75m DXing. Later he moved up near Boston and became the VHF editor of CQ *while I was editor of that magazine. When* CQ *got over a year behind in paying him, he switched over to* QST, *where he battled their anti-Technician policies for some years, finally quitting them.*

Sam today is one of the foremost microwave scientists in the world, though a scientist in the historic sense in that he designs and builds things himself, not just with a computer doing the calculations and some technician the dirty work.

ter. He laughed.

THE ITU

My travels started back in late April with a trip to Los Angeles for a microcomputer show. This was the same weekend as Dayton, so other *73 Magazine* staffers covered for me at Dayton. While in L.A., I got together with several ARMA members and discussed the WARC situation, and was able to make arrangements for the Japanese Ham Manufacturer's Association to fund and supply a very well qualified man for the proposed African mission, thus making it an international affair.

From there, I flew back to New York for a day at the Premium Show, then on down to Arecibo for a visit with Sam Harris W1FZJ/KP4 and his wife Helen W1HOY/KP4. The big dish there has been substantially improved since my last visit (1968), and there is growing interest in using it for a ham moonbounce weekend again. I was surprised and pleased to find that much of the dish's time is spent in looking for LGMs. They have a very big computer which analyzes everything coming in for anything which has a pattern, affectionately called looking for Little Green Men.

Eastern Airlines has one of the darnedest fares yet . . . for about $20 less than round trip to California, Sherry and I were able to fly to California, Atlanta, New York, Puerto Rico, Saint Martin, and back to Boston. We spent a couple days skin diving on Saint Martin (FS7/PJ7), then flew back to New Hampshire for a couple days . . . next to Birmingham for their hamfest . . . home again for a couple more days, then off to London to visit microcomputer stores and manufacturers . . . Paris for Micro-Expo, where I spoke to a packed house on microcomputer software . . . then up to Switzerland for the visit with the ITU.

I felt that the visit to the ITU headquarters was very important as a way of reinforcing my own observations on what has happened, what is happening, and what appears as if it will happen. The projection that looks likely to me is so terrible that I just couldn't really believe it. I felt the same as the high ARRL staffer I talked to recently who answered when I asked him about the possibility of our losing all ham bands next year, "They *can't* cancel amateur radio!" It is just unthinkable.

Unfortunately, I am able to at least consider the possibility of the totally unthinkable, so I guess I was searching for reassurance and I felt that if anyone in the world might have a finger on the pulse of the WARC, it would be the people who are in the middle of it in Geneva. I decided to extend my Paris trip to Geneva and try for some encouraging words at the ITU. As I said earlier, I was unable to find anything to be optimistic about at Geneva. I talked with a number of people there, most of whom I have known for many years and have found most dependable and strongly on the conservative side.

Since I seem unable to really do anything about the situation, I will resume my complacent pose and join the ARRL and the rest of you with crossed fingers as a shield against the future, hoping that all will indeed be well and that I have been a worrywart for nothing. The ARRL may just be right— perhaps the ITU *can't* cancel amateur radio.

What are the chances of the U.S. ignoring the WARC decisions? I asked at the ITU about this. They say that this is impossible. What about the U.S. getting a footnote into the allocations table so U.S. amateurs can carry on? That's possible, but there wouldn't be much DX. This *could* keep 2m going, if such a move could be gotten through the ITU meeting. I'll be investigating these options.

THE MONEY NEEDED

The amount of money needed for the proposed mission is so insignificant when compared to ham sales that the resistance of manufacturers to funding is difficult to understand. I calculate it would run about $20,000 a month. I based this on a rough estimate of $100 per day per person, which is about what things cost in Europe these days. I also figured that since the people on the trip would be business people, they would have to get back to the U.S. every now and then to keep their businesses going. Figuring four people for three weeks, plus a round trip fare once a month, plus a couple gift ham stations for each of the three countries visited during each monthly trip, I came up with around $20,000.

On the one hand, that's a lot of money, but compared to the U.S. ham sales of over $100,000,000 per year, it's peanuts. With 231 different advertisers in the most recent issues of *73* and *QST*, I figured that if each of these put up just $20 a week for one month, we would have our $20,000. Check that out on your hand calculator. We have about 500 ham distributors plus over 1000 manufacturers, and who knows how many hams who could afford to send in money. No, the twenty thou should be easy to get, if anyone asked for it.

WHAT HAPPENED

When I got back from my latest round of ham and computer shows, I called Jack Burchfield of Ten-Tec to see what had come of the letter from *Ham Radio* asking for the industry to send money to ARMA for the mission and to the request for same in *HR Reports*. Jack said that the *HR* mention was minimal and no letter had been written and that, as far as he was concerned, that was the end of it. I agreed.

I explained to Jack that the *Kilobaud* exhibit at NCC in Anaheim had shown our new line of mass-produced software for the Radio Shack TRS-80 and the Commodore PET microcomputers. The orders already received and promised showed that we had a bull by the tail and I was needed at home to organize our growth to meet this new market. I said that while I would do everything I could to help amateur radio, I was not going to be foolish enough to be the only one to make the effort. Now that the industry knew the score, the ball was in ARMA's court.

INSTANT SOFTWARE

The concept behind our publishing software just as we do books and magazines was to make a large number of programs available for microcomputers. Without these programs, I could see a gradually growing public resistance to buying computers and another disaster something like the CB debacle coming. Computers are of no earthly use if you don't have programs for them.

Since it takes a lot of experience and time to write significant programs, I figured that the people who were doing this should get proper rewards in the form of royalties when their programs were sold. So far there has been little effort to do this, with the result that there are virtually no programs available for microcomputers.

The first thing I did was set

Continued on page 148

LETTERS

THE CRRL AND 2M

I would like to enclose a copy of a letter from the CRRL concerning a proposal which, if passed, would eliminate all amateur activity on the two meter and 1¼ meter bands. One has to wonder about the intelligence of some of our overpaid and underemployed civil servants. As the Experimenter's license was to demand a high degree of technical knowledge, I wonder if there would be more than 100 people in all of Canada who would be interested. If the qualifications were to be lowered so as to include the CB types, not much interest would be shown in pulse or packet emissions. As this proposal would, if accepted, seriously affect two meter and 1½ meter activity adjacent to the border, perhaps you will find this of interest.

I enjoy your magazine, although I believe the ARRL receives more than its share of criticism. I like the Ham Help letters, as it appears that amateur radio is becoming sort of impersonal and many contacts are only for the purpose of collecting QSL cards.

I don't consider it a QSO to exchange name, address, and signal reports. We seem to be losing the ability to communicate with each other. We need a lot more rag chewers on the bands. Amateurs have too many repeaters on the air, sitting idle most of the time. Many are built out of spite or disagreement with other groups. You find that after an initial contact through a repeater, it is in many cases impossible to find anyone to talk to, as all the listeners feel they know who you are and where you are from. Is not one of the reasons for being a ham a sense of belonging to a group of people with similar interests? Perhaps we need to cultivate our abilities to talk to each other. We have lots to discuss, even the bureaucrats' attempts to get rid of us entirely.

As the present restrictions being placed on amateurs are due to the problem created by the illegal operation of CBers, a better solution could be a resumption of fees and a use of the money thus collected to apprehend and impose severe penalties on these people. At the present time, there appear to be only feeble attempts to apprehend the illegal CBers or HFers, and if they are caught, they receive nothing more than a slap on the wrist. The ban on 10 meter linears I don't believe is any hardship on anyone. In fact, amateur radio would probably be better off if linears of all types were banned.

Willis Wood VE5WV
Estevan, Saskatchewan
Canada

I am grateful to Jack Reed VE3GMT for presenting this opportunity of briefly addressing you concerning a recent DOC proposal of far-reaching importance to the welfare of the Canadian Amateur Experimental Service, both nationally and internationally.

On March 1st, DOC issued its formal Canada Gazette proposals for their new code-free Experimenter's License. These proposals contained many surprises to your national organizations, many of which were at variance with discussion results at the recent DOC Amateur Symposium. Experimenter frequencies are proposed from 144 MHz up (no HF privileges), but of extremely serious consequence is the proposal to permit *only* Experimenters pulse modulation emissions on our two meter band, and, in addition, the deletion of *all* present emission forms between 220 and 225 MHz, except that of "packet radio." Packet radio is a technique through which packets of data may be broadcast over a communication channel which is shared by a number of users.

Although not conclusive at this point in time, the League considers that permitting pulse modulation over practically the entire two meter band could seriously interfere with and otherwise jeopardize present extensive repeater operations. Additionally, the present two meter OSCAR frequencies on this band could be seriously affected. Of equal if not perhaps greater concern is the Department's proposal to limit 220-225 MHz emission to that of "packet radio" only, thereby effectively precluding our projected repeater growth into this presently authorized band, not to mention the resultant interference which will occur to present and future U.S. repeaters adjacent to the border.

Dr. deMercado (Director General of the DOC Regulatory Service), the apparent architect of these proposals, strongly feels that the implementation of these new regulations will launch Canadian amateurs into orbit as the world leaders in the development of these new communications techniques. We regret that we are unable to share his enthusiasm, especially with respect to the specified frequencies. The League does not wish to contradict the concept envisaged by Dr. deMercado, but *we are categorically opposed* to the particular spectrum frequency space which has been stipulated.

We suggest that there are other higher frequencies available, just as technically suitable, which would not severely handicap our present well-justified operations in the 144-148 and 220-225 MHz bands.

Technical progress and investigations are, of course, important justification factors for our service, but not, we respectfully suggest, if it should negate or otherwise sacrifice the other important facets of the amateur service by which amateurs have become acknowledged and proven national resources to our nation in both peace and war!

The CRRL shall shortly be making a complete and technically qualified presentation to the Department in respect to these proposals; however, we strongly wish to urge all individual amateurs to make their comment known direct to the DOC (Department of Communications, 300 Slater Street, Ottawa, K1A 0C8).

Thank you for your cooperation in helping us to help you.

Ron J. Hesler VE1SH
Director, CRRL

PRIORITY OVERRIDE

Your plan for converted CB sets on ten meters is the most logical I've seen to date, but it has one very important flaw.

As the Coast Guard found out decades ago, an emergency channel has to be used for calling and working channels for traffic after contact is established, so that people will always be listening.

Your idea to use the channel one position of converted sets for calling and listening is good, except for one thing: Many of the CB sets include a "Priority Override" switch which allows channel nine to interrupt reception on any other channel, as long as the switch is on. This feature, if used by hams, would allow QSOs on other channels to be interrupted by a call on channel nine, thus allowing the owner to monitor both a local channel and the calling channel.

I suggest, therefore, that you should change the calling and listening channel to channel nine, at 29.065 MHz.

Ernest W. Horne WD6FZY
Isla Vista CA

A BETTER FEEDTHROUGH

I read with extreme interest the article, "A Better Feedthrough for Cables," page 50, June, 1978, issue of *73*.

It was my choice for June's article winner, and an excellent one it is.

I submitted that same design to the ARRL and they published it in the July, 1976, Issue of *QST*, page 41. I feel you gave the design a better layout than *QST* did mine. Anyway, keep up the fine magazine—I really enjoy reading it and have been a subscriber since last year.

By the way, this method has been used at my QTH for over two and a half years.

Keith H. Gilbertson WB0LXM
Detroit Lakes MN

A WORD FROM THE NBS

While we are delighted with Mr. Bloom's enthusiasm for the frequency calibration service using the TV network color subcarrier, there are some misleading and/or inaccurate statements in his article that should be clarified (see "In Search of the Ultimate—an incredible counter calibrator," April, 1978, issue, p. 66).

NBS operates two HF radio stations, WWV in Ft. Collins, Colorado, and WWVH on Kauai, Hawaii. At the present time, both stations transmit on 2.5, 5, 10, and 15 MHz. The accuracy of the WWV/WWVH frequencies as *transmitted* is better than 1×10^{-11} (not 1×10^{-9} as stated by Bloom). The frequencies are generated by cesium beam atomic frequency standards located at the stations which are steered in long-term to agree with the NBS Frequency Standard in Boulder, Colorado. *Received* accuracy, correctly stated by Bloom, may be degraded to 1×10^{-7} by propagation path disturbances.

Mr. Bloom also referred to NBS station WWVL. These VLF transmissions, formerly operated at 20 kHz on an experimental basis, were terminated on July 1, 1972.

It is *not* true that NBS LF station WWVB on 60 kHz radiates

only frequency information. The format contains a BCD time code at a one-pulse-per-second rate, providing day of year, hours, minutes, seconds, and the difference between Coordinated Universal Time (UTC) and astronomical time, UT1.

NBS did not consult with the four TV networks, nor did NBS suggest that the networks stabilize their color subcarriers (control the frequency of the color burst). The networks began using atomic rubidium standards in 1968-1969 to solve an operational problem relating to synchronization of "remote" color broadcasts, such as sporting events. The stability of rubidium standards allowed these remote pickups to be "locked" to the network centers using one of several techniques described in the SMPTE (Society of Motion Picture and Television Engineers) journals in 1969-1970.

When we at NBS learned that the networks *were* installing atomic standards, we began looking into methods of utilizing the network subcarriers as frequency transfer standards, and many people are now using this technique for oscillator calibration. It is a quick, relatively inexpensive calibration method, and with care, one can achieve accuracies better than 1×10^{-10} with a high confidence level.

This would also seem to be an appropriate time to mention a new development in the use of the color subcarrier technique. The networks began using rubidium standards to solve some of their synchronization problems. However, the digital frame synchronizer now allows them to solve the same problems in a more flexible manner. Unfortunately, when a local station places a frame synchronizer "in series" with the network line, the highly stable atomic subcarrier reference is lost. Several of the network-owned stations are now using frame synchronizers so the viewers in their service areas can no longer receive the network subcarrier.

We at NBS are currently planning to survey all TV stations to determine how many stations are now using or plan to use frame synchronizers. We still feel that the color subcarrier is useful for frequency calibrations, but persons using this method should make measurements on more than one network so that the use of frame synchronizers by the local stations can be detected.

Dick D. Davis
Time and Frequency Division
National Bureau of Standards
Boulder CO

MINERAL OIL

This is In regard to the article, "Home Canned Dummy," page 154, *73 Magazine*, May, 1978. The author suggests filling the dummy load can with motor oil. This can be an unsafe practice. A little arcing, and presto, instant fire! A much better choice is mineral oil, available from any drugstore or pharmaceutical house at very reasonable cost, and very nearly impossible to ignite. Also, transformer oil, once a favorite for this application, has been found to cause cancer, though it has good dielectric properties and a high ignition point. My choice is light mineral oil.

Ed English W6WYQ
San Luis Obispo CA

BUILDING JAMMERS

I just subscribed to *73 Magazine* for 3 years and now I am beginning to wonder if I didn't make a mistake. You see, I made a special trip to the local ham store to purchase the May, 1978, issue in order to fill out the '78 series, and what should I find but an article telling hams to build police radar jammers.

Now seriously, Wayne, do you think a reputable ham magazine should be publishing this kind of information? Don't you think hams could spend their time to better advantage than building jammers? What about the legal aspects? Last time I looked at the regs, it was against the law to willfully cause interference to another service! If we want deregulation and a proud, self-governing hobby, then this is not the way to get it.

I hope the quality of articles improves or you will have to send the $36.00 back. I also subscribe to *Kilobaud* and hope I never see an article like that in it, either!

George H. "Bud" Saum K0GS
Westminster CO

HUMAN RELATIONS

In the June, 1978, issue, in an article by K5LUW entitled "Disguised Birdhouse Antenna," the author makes a very poor statement, i.e., "Also, if the sight of large antenna arrays automatically makes your neighbors' television sets start acting up and you are tired of those annoying phone calls every time you start operating, maybe what you need is a disguised antenna . . ."

Maybe you need an FCC citation or at least a course in human relations somewhere. It seems that the ARRL has you here—for many years, they have talked about the "proper" ways to handle TVI problems (and I cannot recall one solution being to "disguise" your antenna).

Yes, the author was talking about "cliff-dwelling" in an apartment where antennas were verboten (the "birdhouse" title is apt), but the statement does stand alone in the article as a means to avoid TVI complaints.

Granted, manufacturers do not design TVs, stereos, etc., with sufficient discrimination to reject a strong (but legal) ham signal. Nevertheless, I've always thought the ham should make himself known in the community and through goodwill (and maybe some extra effort like installing filters) solve the problem!

If the reason you're "disguising" your antenna is to circumvent a prohibition in your rental contract against outside antennas, I can understand it (but you are still acting illegally). If, in addition, it is to avoid TVI complaints, I contend it is not in the best interests of ham radio, even if your signal is entirely clean.

G. S. Wren K5EAT
Helotes TX

ANOTHER BELIEVER

Put me down as a believer, too! After two months with your code tapes, I passed the General test on 6/27. I started with a 5 wpm base and spent an average of one hour per day in practice. Who needs a receiver!

D. T. Capasso WB2NBI
Haddonfield NJ

RADIO LAW ENFORCEMENT

Perhaps we should have some further discussion in your magazine about what Dan Gingras said in his letter on radio enforcement (June, 1978, p. 61). I personally feel that some system of dealing promptly and without having to involve three agencies should be set up, and further, I understand revision of the Communications Act of 1934 is under consideration, so the time is now.

I am not a lawyer, but I have some training in criminal law. Traditionally, police officers have been permitted to arrest without warrant for breach of the peace. There are two ways this might be useful. First, Congress might rule that FCC inspectors and engineers were officers for this purpose. Certainly many of the offenses involved would be breaches of the peace if committed in a public place, and the radio waves, with as many people on them as we have presently, should be considered a public place. The other method, which will not endear me to the FCC, who would like to maintain complete jurisdiction, is to declare the radio waves to be a public place for the purposes of breach of the peace laws, thereby opening jurisdiction on non-technical violations such as swearing, interfering with emergencies, and other mischief to local law enforcement authorities.

For example, New Hampshire law provides for legal action against a person who "makes unreasonable noises in a private place, which can be heard in a public place. . ." Were the radio waves declared a public place, much could be done under this provision and other parts of the disorderly conduct law.

One idea that might be useful in such cases where FCC personnel were authorized to act on their own would be for them to go back to using inspectors. Field personnel at the moment are mostly field engineers, graduate engineers that cost more than a police lieutenant. They used to have a force of people with either a lot of experience or a tech school education, and could get more personnel for the money that way, for handling routine matters. Perhaps a system of part-time inspectors, as many towns use the "special police officer" to control fairs or other situations where personnel are needed temporarily, could be applied to radio. The knowledge that someone within 30 miles could be complained to, and had the authority to act, would cool off some of the regular offenders around here.

Perhaps you could have an attorney write an article on the subject and/or put some editorial weight behind this.

Joel S. Look W1KCR
Claremont NH

PIONEER LOST

The unfortunate and untimely death of Mr. R. R. Freeland, Sr., President of International Crystal Manufacturing Company, Incorporated, has left a great void in the electronic industry.

Mr. Freeland and his wife Virginia were killed instantly when their twin engine Turbo-Commander exploded in midair just west of Oklahoma City on Saturday morning, May 27. He

Continued on page 96

Editor:
Robert Baker WB2GFE
15 Windsor Dr.
Atco NJ 08004

CONTESTS

For rules on the ARRL September VHF QSO Party, check the August issue of *QST*. The official rules were not available at the time this went to press and there will probably be a change or two from last year's rules!

PENNSYLVANIA QSO PARTY
Starts: 1700 GMT Saturday, September 9
Ends: 2359 GMT Sunday, September 10

Sponsored by the Nittany ARC; all amateurs are invited to participate. A "super activity" period has been arranged for Saturday evening, 2400 GMT and 1700 GMT, when it is hoped that many "casuals" will join the fun. PA stations may work both PA and non-PA stations. Each station may be worked once per band and mode (CW and SSB).

EXCHANGE:

QSO number, RS(T), county or ARRL section.

FREQUENCIES:

CW—1810, 3550, 7050, 14050, 21050, 28050; SSB—1815, 3980, 7280, 14315, 21380, 28560; Novice—3715, 7160, 21115, 28115.

SCORING:

PA stations score 3 points per out-of-state QSO and 1 point per PA QSO. Multiplier is number of ARRL sections, including EPA and WPA. One additional multiplier may be counted for DX QSO (limit: one). Out-of-state stations score 1 point per PA QSO times the number of PA counties worked (67 max.).

ENTRIES AND AWARDS:

Logs must include dates/times in GMT, stations worked, RST sent/rcvd., band, mode, and number of new section or county as worked (multipliers). Summary sheet required, showing number of QSOs, QSO points, total multiplier, and claimed score. Also, all entries should include a checklist of counties worked. Mail logs, summary sheets, checksheets, and any comments by Oct. 14th to: Douglas R. Maddox W3HDH, 1187 S. Garner Street, State College PA 16801. SASE appreciated. Certificates to section winners and outstanding PA entries, with minimum of 10 QSOs required for awards.

NORTH AMERICAN SPRINT CONTEST
Contest period runs from 0100 GMT to 0500 GMT September 10

Sponsored by the *National Contest Journal*; any licensed radio amateur may enter. The object is to work as many North American stations (and/or other stations if you are in North America) as possible and as many multipliers as possible during the contest period. All contest contacts must be made on CW on the 80, 40, or 20 meter bands only. Each station may be worked once per band. North American stations are as defined by the rules of the *CQ* WW DX contests.

EXCHANGE:

You must make the entire exchange as given below: his call, your call, serial number, your name, and your state or VE province or country. Serial numbers must begin with serial number one (001) and must be sequential thereafter.

FREQUENCIES:

3530-3550, 7030-7050, 14030-14050.

SCORING:

North American stations: Multiply total valid contacts by the sum of states, VE provinces, and other worldwide countries (do not count USA and VE as countries) to get the final score. Non-North American stations: Multiply total valid contacts by the sum of states, VE provinces, and other North American countries (do not count USA and VE as countries). KH6 is not counted as a state and is not a North American country. VE multipliers are: maritime (VE1, VO1, and VO2) and VE2 through VE8 (8 total).

SPECIAL QSY RULE:

This rule applies to North American stations only! If any North American station solicits a call by sending "CQ, QRZ?, QRZ?," etc., he is permitted to work only one station in response to that solicitation. He must thereafter move at least 1 kHz before he works another station, or at least 5 kHz before he again solicits other calls.

ENTRIES:

Entry classification is single operator only, with the use of helpers or spotting nets not permitted. Regardless of the number of licensed callsigns issued to a given operator, one and *only* one callsign shall be utilized during the contest by that operator. Proper logging requires including the time of each contact along with the band or frequency. Only completely copied and logged two-way exchanges between a North American station and another station are valid for this con-

CALENDAR

Sept 2-4*	**Four Land QSO Party**
Sept 9-10	**Pennsylvania QSO Party**
	ARRL VHF QSO Party
Sept 10	**North American CW Sprint**
Sept 16-18	**Washington State QSO Party**
	Maryland/DC QSO Party
	Scandinavian Activity Contest—CW
Sept 23-24	**Scandinavian Activity Contest—Phone**
	Delta QSO Party
Sept 30-Oct 1	**Rocky Mountain Division QSO Party**
Oct 7-8	**QRP QSO Party**
	California QSO Party
	VK/ZL/Oceania DX Contest—Phone & RTTY
Oct 14-15	**VK/ZL/Oceania DX Contest—CW**
	Nine Land QSO Party
	RSGB 21/28 MHz—Phone
	Manitoba QSO Party
	ARRL CD Party—CW
Oct 21-22	**Jamboree-on-the-Air**
	RSGB 7 MHz SSB
	ARRL CD Party—Phone
Oct 28-29	**CQ Worldwide DX—Phone**
	CQ-WE Contest
Nov 4-5	**ARRL Sweepstakes—CW**
	RSGB 7 MHz CW
Nov 11	**OK DX Contest**
Nov 11-12	**IPA Contest**
Nov 18-19	**ARRL Sweepstakes—Phone**
Nov 25-26	**CW Worldwide DX—CW**
Dec 2-3	**ARRL 160 Meter Contest**
	TOPS CW Contest
Dec 9-10	**ARRL 10 Meter Contest**

***described in last issue**

RESULTS

RESULTS OF THE 1978 BARTG RTTY CONTEST

Top 10 Single Operator Stations

W3FV	**447,678 points**	**261 QSOs**	**39 countries**
SM6GVA	**440,578**	**297**	**26**
I3FUE	**432,066**	**315**	**36**
W2NZ	**403,374**	**249**	**37**
F9XY	**401,980**	**282**	**31**
I5WT	**380,482**	**261**	**35**
W1GKJ	**365,904**	**252**	**28**
I5KPK	**345,000**	**244**	**32**
I5MYL	**338,142**	**240**	**28**
HB9AVK	**325,686**	**197**	**33**

Top Multi-Operator Entry

DL0TS	**329,910**	**212**	**34**

Top SWL Entry

H. Ballenberger (DL)	**417,452**	**246**	**35**

Several US entries were received too late for inclusion in the official results, due to serious delays in overseas surface mail.

test. Entries must be sent to Rusty Epps N6SF, 35 Belcher Street, San Francisco CA 94114. Entries must be received not later than 30 days after the Sprint to be eligible for trophies and awards. An entry consists of (1) a summary sheet showing valid contacts by band, total multipliers, total score, name and callsign of the operator, station callsign, and station location; (2) a complete, legible log of all contacts (including dupes marked as such) with indication by numbered sequence of each multiplier claimed; and (3) a separate checksheet for each band. Logs, summary sheets, and checksheets may be homemade or patterned after those shown in the June/July issue of the *National Contest Journal*. Any entry may be disqualified for illegibility, incorrectness, or illegal or non-ethical operation. Such disqualification is at the discretion of the NCJ Contest/Review Committee.

AWARDS:

A trophy shall be awarded to the highest scoring entrant. Certificates of merit shall be awarded to the highest scoring entrant from each USA call district, Canada, and other country, to each of the ten highest scoring entrants, to each member of the winning team, and to the highest scoring entrant on each team.

TEAM COMPETITION:

Team competition is limited to a maximum of 10 operators as a single entry unit. Clubs having more than 10 members may submit more than one team entry. *Precontest requirement:* To qualify as a team entry, the name, callsign of each operator, and callsign of the station operated should the operator be a guest at a station other than his own must be registered with N6SF. The team information may be contained either in a letter, which must be received by N6SF before the start of the Sprint, or in a Western Union Mailgram dated at least 24 hours before the start of the Sprint. There are neither distance limitations nor meeting requirements for a team entry. The only requirement is a pre-registration of the team.

DELMONT WAS CONTEST

Starts: 0000Z GMT September 16
Ends: 2400Z GMT September 17

The Delmont Radio Club of Hatboro PA will be conducting a Worked All States contest for a 48-hour period from 8 pm EDT, Friday, September 15, to 8 pm EDT, Sunday, September 17. Each club member will try to work as many states as possible, with awards based on 1 point per QSO and 1 point per QSL of same.

WASHINGTON STATE QSO PARTY

Operating Periods:
0100 to 0700 GMT September 16;
1300 GMT September 16 to 0700 GMT September 17;
1300 GMT September 17 to 0100 GMT September 18

Sponsored by the Boeing Employees' ARC (BEARS), the contest is open to all amateurs. All bands and modes may be used. Stations may be worked once per band and mode, and may be worked again if they are a new multiplier.

EXCHANGE:

WA stations send QSO number, RST, and county; others send QSO number, RST, and state, province, or country.

FREQUENCIES:

CW—1805, 3560, 7060, 14060, 21060, 28160; phone—1815, 3925, 7260, 14305, 21380, 28580; Novice—3725, 7125, 21150, 28160.

SCORING:

Score 2 points per QSO. WA stations multiply QSO points by total number of states, provinces, and other countries worked. All others score 2 points per WA QSO and multiply by number of WA counties worked (39 max.). For non-WA stations only, there is an extra multiplier of one for each group of 8 contacts with the same WA county.

Washington county checkoff list for non-Washington State entries: Adams, Asotin, Benton, Chelan, Clallam, Clark, Columbia, Cowlitz, Douglas, Ferry, Franklin, Garfield, Grant, Grays Harbor, Island, Jefferson, King, Kitsap, Kittitas, Klickitat, Lewis, Lincoln, Mason, Okanogan, Pacific, Pend Oreille, Pierce, San Juan, Skagit, Skamania, Snohomish, Spokane, Stevens, Thurston, Wahkiakum, Walla Walla, Whatcom, Whitman, Yakima.

ENTRIES AND AWARDS:

Certificates to high scores in both single and multi-operator classes. Five BEARS awards are also available to anyone working 5 club members. All contest entries will be screened by the contest committee for possible Worked Five BEARS Awards. The Worked 3 BEAR Cubs Award is also available for working 3 Novice members. Logs must show dates/ times in GMT, stations worked, exchanges, bands and modes, and scores claimed. Include a checksheet for entries with more than 100 QSOs. Each entry must include a signed statement that the decision of the Contest Committee will be accepted as final. Logs will *not be returned*. Results of the QSO Party will be mailed to all entrants; an SASE is *not* required. Logs and scores must be postmarked no later than October 18th and sent to: Boeing Employees' ARC, c/o Contest Committee, Willis D. Propst K7RS, 18415 38th Ave. S., Seattle WA 98188.

SCANDINAVIAN ACTIVITY CONTEST

CW
Starts: 1500 GMT September 16
Ends: 1800 GMT September 17
Phone
Starts: 1500 GMT September 23
Ends: 1800 GMT September 24

All amateur bands from 80 to 10 meters may be used. The general call is "CQ SAC" and "CQ Scandinavia." Scandinavians will use "CQ Test" or "CQ Contest." Non-Scandinavians should try to work as many Scandinavian stations as possible. The same station may be worked once on each band. No crossmode QSOs are allowed. The prefixes used in Scandinavia are: LA/LB/LG/LJ—Norway; JW—Svalbard; JX—Jan Mayen; OF/OG/OH/OI—Finland; OHØ—Aland Islands; OJØ—Market Reef; OX— Greenland; OY—Faroe

Continued on page 80

RESULTS

RESULTS OF THE 1978 MARAC COUNTY HUNTERS SSB CONTEST

Fixed Station Scores		*Mobile Station Scores*	
*N7TT/2	1,898,642	*WAØRJJ	849,176
**N7SU	986,206	*K3KX	457,306
**W7JYW	451,875	**N4UF	273,819
**W8WT	394,350	**W5VQR	216,410
**WA5DXI	385,382	**WB5BBS	191,290
**WA9MSW	332,450	**WØBK	150,600
**WB4UPW	283,024	**WAØYJL	108,186
**WBØJUS	171,120	**N5BO	43,670
**K9BG	168,041	**W1EXZ	32,844
**K9GTQ	135,080	**K9DZG	10,560
**WB4ERM	127,200	**WB8MDG	144
		WØQWS	7,655 (Check log)

DX Station Scores	
*CT1BY	19,740
**OK1DKS	2,100
CT1UA	160

*Plaque awards
**Certificate awards

RESULTS

RESULTS OF THE 1977 CALIFORNIA QSO PARTY

Single Operator			
Top Ten California			
W6YX (N7MH op)	1709	58	198,244
K6LL	1496	58	173,536
K6SE (WA6OYV op)	1334	55	146,740
WB6NHF	1164	57	132,696
W7CB/6	964	55	106,040
K6XO	931	54	100,548
WB6ION	865	58	100,340
K6ZM	747	56	83,664
W6TPH	705	54	76,140
N6VB	585	53	62,070
Top Ten Out of State			
K9BG	511	57	58,254
N7ZZ	488	54	52,704
K5TM (K5ZD op)	417	52	43,368
W5KLB	253	46	23,276
W3HDH	217	48	20,832
VE7DSA	218	46	20,056
WA8CZH (N8UM)	212	41	17,384
K9EG	193	44	16,984
WBØSAA	207	41	16,974
WBØPYD	199	41	16,318

This year's club competition winner is the Wireless Institute of the Northeast, which beat out second-place Mad River by only 200 points.

Looking West

Bill Pasternak WA6ITF
24854-C Newhall Ave.
Newhall CA 91321

ARMA could be a great boon to amateur radio if it would only stop its infighting and get its act together. We need it. There is nothing else. We face a crisis which threatens the very existence of the amateur service, and "Mother Newington" just sits and procrastinates. Come WARC '79, we had better have a well-oiled machine in the form of ARMA or we could all go down the tubes.

ARMA, the Amateur Radio Manufacturer's Association, is the best thing to come along in years. It is composed of those companies which import and/or manufacture the equipment that virtually all of us use. These are people who understand the world of big money, big business, and big politics. They have the collective ability to "bargain" for us in a way that the ARRL can never match. We need them and they need us. Together we can turn WARC '79 from a disaster into a successful exercise in international diplomatic relations. With their help, amateur radio as we know it can continue to grow and prosper.

Therefore, in the name of *all* concerned amateurs, I appeal to individuals who comprise ARMA to "bury the hatchet" with one another and work *with us* to turn the tide at WARC '79. If you want to fight among yourselves about matters not directly concerning WARC, fine. Do it in 1980. Right now, only one thing should concern you: being sure you have a market in 1980 to bicker about.

SPECTRUM MANAGEMENT

For all intents and purposes, on July 1, 1978, the Southern California Repeater Association was laid to rest. Not that it had been unsuccessful. Far from it. But thanks to the deregulation that made FM a blockbuster in a neighborhood in which it did not belong, it became evident that the day when repeaters could isolate themselves from the rest of the amateur society was long gone. In the short time since 21033's implementation, problems had begun to take shape which could easily have led to an intermode war—with FM coming up as the sure loser. Already, important ranging experiments and DX contacts on SSB in this geographic area, including an "opening" to Hawaii, had been obliterated by FMers plopping down indiscriminately to hold local rag chews. It was apparent that, as a repeater owner organization only, the SCRA could do little or nothing to help rectify this situation. However, if a way could be found to open organizational membership to all spectrum users, then a dialogue could be developed to negate such problems in the future and avoid any intermode confrontation.

At 12:30 pm on Saturday, July 1, Chairman Paul McClure WA6HGK called to order what was to be the last SCRA meeting under its old format. By 5:00 pm, when the meeting ended, the structure of the SCRA had been reorganized into two parallel total spectrum management organizations, one each for two meters and 220 MHz. Membership in either organization is open to all interested spectrum users (the 2 meter organization has the minimal limitation of a Technician class license, while the 220 organization requires only an amateur license). In either organization, all members carry voting privileges. The 220 organization is named the Southern California 220 Spectrum Management Association ("SMA-220" for short), and its interim president is Bob Buaas K6KGS. For the moment, the 2 meter organization has retained the SCRA logo (with the additional Spectrum Management tag added on). This will shortly change, probably to SMA-144 or something along those lines. Both organizations intend to incorporate. In addition, dues have been cut in half, so if one's interest is in one band only, he only pays half of what he did before (while if his interests are twofold, his personal dues structure remains the same).

Attending the meeting were not only repeater people, but also representatives from other non-relay modes, including a three-member delegation from Sidewinders On Two's southern California chapter. Even a guy claiming to represent AM interests showed up. The vote was close, but in the end the forward thinkers prevailed and restructuring became a reality. For the first time, a repeater council had changed its character to welcome input from all areas of amateur operation on VHF.

DISSENT?

While many spectrum users seem elated at the results of the restructuring, there are some who are very disturbed at the outcome. This seemed obvious from the lack of attendance at the meeting by a good number of two meter repeater owners, even though the meeting was announced in *HR Report* and on the Westlink taped newscasts. The 220 MHz people showed up en masse, but two meter participation was obviously lacking.

It is no secret that many of what I term "old-line" repeater owners feel that no one other than themselves should have any say-so in the matter of council operations. In the past, the question of non-owner voting participation had been voted down, usually after heated and emotional debate. It usually lost by a large majority—a vote carried by the two meter faction. However, at this meeting no such voting bloc was on hand, so a coalition of the "new line" two meter people and the 220 owners carried us into a new era. What, if anything, the old-liners will do to show their displeasure is unknown, but rumors are running rampant about the formation of a new owner-only organization to challenge the new dual SCRA/SMA 220 structure. I hope this doesn't happen, because owner/user relations are already quite strained.

DECENTRALIZATION OF GOVERNMENT

Government? Well, that's as close a term as I can come up with right now, so it will have to do. In this case, the term is being applied to the "Centralized 2 Meter Technical Committee," a committee which I currently happen to chair on an interim basis for the SCRA. If you never get the chance to serve in a position such as this, consider yourself lucky. It's a nightmare and a headache. However, there are rewards which make it all worthwhile, such as those times when you are able to prevent a "brushfire" dispute from erupting into total warfare, and the few and far between ones when you send out a coordination letter and receive a written thank-you note.

Anyhow, something recently occurred to me, something which I hope to try out here to help minimize coordination problems. When you have a single central committee (or individual coordinator) handling everything, the work load can be unbelievable—even for a committee which meets bimonthly like ours does. Is there a better way? Maybe, but perhaps not one which would be applicable everywhere. The reason? Terrain.

In southern California, most repeaters sit on high places such as mountains and serve users in low(er) places. Because of their altitude, it would seem that our repeaters' ranges would be almost limitless. Not so. Mother Nature has placed other mountains in strategic positions and has seen fit to make them inaccessible enough to make their use as potential repeater sites impractical. Until solar power on a truly operational scale becomes a reality, they shall remain untouched. Thanks to these "bumps," southern California is approximately divided into four geographic zones. They are the high desert, the low desert, the Ventura/Santa Barbara and inland area, and the Los Angeles/San Diego rf corridor.

Rather than have one central committee handle everything, I hope to institute a regionalized subcommittee structure in which several smaller regional committees could handle the needs of the local amateurs by investigating the technical aspects of an intended relay operation and making a recommendation as to which channel pair offered the best chance for minimal environmental impact—i.e., interference to existing operations. While I may know what I can hear in the LA area, Santa Barbara is a whole new ball game. A regional technical subcommittee could do far better than a group of Angelinos or San Diegoites or high desert people in coming up with a viable operation. However, to delegate such duties could result in chaos if there were not some form of control, and here is where the Central Technical Committee comes into play. The regional subcommittees will make recommendations based upon what they determine is best suited to the area's needs, but all such recommendations will be reviewed by the Central Committee prior to implementation. If all looks copesetic, then it's only a matter of saying "yes" and sending out the letter. However, if something exists in another geographic area that experience has shown to be a no-no, it is hoped that such will be caught by the Central Committee before disaster strikes. In this way, the self-determination of a given area's setup can become a viable part of the overall coordination process, and no one need ever feel that he or she has been left out of the process.

I don't know if it can be made to work. I do think that the idea holds merit and is a viable alternative to having a myriad of councils, each duplicating the other's work. Any opinions?

Continued on page 77

RTTY Loop

Marc I. Leavey, M.D. WA3AJR
4006 Winlee Road
Randallstown MD 21133

Labor Day is upon us, and the kids are starting back to school. Time to start paying attention to those problems which have been bugging us all summer, but that we've been putting off 'til fall!

For those of you who own mechanical TTY machines, when was the last time you cleaned and lubricated the beast? I know, Teletype™ built them to run for years, but a dose of benign neglect can shorten their life expectancy dramatically. If you have a Model 15 or 19, lubrication should not take more than a half hour, and your machine will thank you!

Let's start with the outside. Wipe the cabinet down with a damp cloth, and spray some glass cleaner on the little window. If yours has a black crinkle finish, some black liquid shoe polish, such as Griffith, will do wonders to restore the "new" look. Other finishes, such as my green crinkle, respond nicely to some paste wax. Check all the wires and cables for signs of fraying or loose connections. Now, lift off that cover and peer inside.

Basically, there are three types of lubrication points in a Teletype machine: oil cups, felts, and sliding contacts. The first two require a good grade of oil, the latter a good grease. I have found that the most available and economical oil is plain old 10W-30 motor oil. Intended for the family car, and frequently available at discount houses, it normally is priced under a dollar a quart. The grease most used by TTY enthusiasts is Lubriplate®, although any good grease such as auto grease (*not* Brylcreem®!) should work well.

Now that you have the cover off, and the machine unplugged, hopefully, unscrew the three large bolts which hold the printing unit on, and the two holding the keyboard in, and break the unit down to its component parts. Turning first to the base, wipe up any accumulated oil or grease, and clean away the typical gunk around the motor. While you're there, look for the ball bearing on each end of the motor shaft. These are oil points. Depress the bail bearing with the spout of your oil can and deposit a large drop of oil therein. If it has been a while since you've done this (or perhaps this is the first time), rotate the motor by hand for a bit, then do it again! Put a small dab of grease on the pinion gear—that's the one on the motor shaft. Finally, clean all contacts on the base and tighten the screws on the terminal block.

The keyboard gets our attention next. First off, look at the row of contacts that produce the pulses. Are they all gooky and covered with a paste of dust and oil? *Clean them*! Use a piece of bond paper and lightly burnish the contacts, too. Check all the springs on the underside of the keyboard for proper seating, and straighten or replace damaged keytops. Now, look at the top of the keyboard. Next to the gear is a small cup, set at a right angle, with a spring-loaded, hinged lid. This is the first of several oil cups we will be filling. They all look the same. Lift the lid and fill the cup with oil. Follow the shaft back to the contact area and you'll find five felt washers between metal surfaces. These are called "felts" and act as oil soaked pads between rotating metal surfaces. Depending on the age of your machine, and your aggressiveness in servicing it, they may be grayish-brown or dark and oil-soaked. If they are not soaked, soak them! Just dabble on oil while rotating the shaft manually until they look saturated, then wait 30 minutes and do it again. Some replenishment drops will do If they look pretty good.

While you set the keyboard aside to let the oil soak in, turn your attention to the printer. Again, clean the contacts and get all the accumulated gunk off everything. If your wife (or mother) will let you, and the accumulation is not too greasy, a vacuum cleaner with a circular brush attachment works wonders in de-linting nooks and crannies. Now, look along the main shaft and fill the three oil cups. Also, notice the felts interspersed. Saturate them the same as you did on the keyboard. Don't forget the felt on the selector magnet assembly!

The next step depends on your familiarity with the machine. We want to take off the typing basket and clean it and the rails and vanes. To accomplish this, place the basket on the far right-hand side by first depressing the manual carriage return level, and, while holding the basket immobile, slide the basket to the extreme *right*. Depressing the dashpot lever should lock it in position. Now, firmly hold the drum which winds the carriage return band while removing the band from the rear of the typing basket. Hook the free end over the end-of-line bell lever. Now re-press the carriage return lever, which should allow the basket to move freely back and forth, and flick the stop lever on the underside. The typing basket should now slide freely off the rails, into your waiting hands, on the right side. Clean all the keys thoroughly, and get the dust and paper bits out of the basket. A small drop of oil on the ball bearings will keep things rolling along, singing a song. While the basket is off, wipe down the vanes and apply a thin layer of grease here. In fact, apply grease to all sliding surfaces, and a little dab to gear teeth, too. Now, *carefully* reverse the sequence of the previous directions and replace the typing basket. Make sure all the forks correctly seat on the vanes at the front of the machine. Also, be sure the basket is locked with the dashpot *before* you re-attach the carriage return band. If you have any difficulty understanding these admittedly sketchy instructions, or have never removed the typing basket before, *DO NOT* attempt it! Either ask someone who has done it to help you, or clean it as best you can without removing it. While it sounds simple enough to do, and it really is, one slipup can totally disable a working machine.

Now put everything back together. Hopefully you haven't any extra pieces left over. While you're at it, check out the ribbon. Is it getting worn to the ragged end? If it is not too old, simply turning it over, by reversing the spools, may bring new contrast to your print. Otherwise, be a sport and replace it. If you don't have a new one, pay a visit to your local drugstore. Any ribbon listed as a replacement for the Underwood Standard will fit. This is usually Number 1 in most replacement lines.

Follow this procedure carefully twice a year, and your machine should have a long, happy life.

A letter turned up in the mailbag from Steve Alexander WD6EQP of Vallejo, California, who enclosed a photo of his "mystery" Teletype. Well, Steve, this is the AN/UGC-20, also known as the "compact" Model 28 KSR. It is a fine machine, but I will admit that it is not as frequently covered as the 15/19 in ham literature. So, next month, I will take a look at the Model 28 and pass along what I can about this beautiful machine.

Quite a bit of response has been heard on the computerized RTTY covered in June and July. More importantly, WD6EQP's letter brings to light the diversity of equipment presently in use on RTTY. I would be interested in compiling some data on just what our readers are using. I invite each of you to send me, on a postcard or QSL, the stats on what kind of RTTY gear you are running, if you have a computerized station setup, what kind of CPU, memory requirements, and perhaps some idea of the program. Send along your information to me at the address shown, or in care of *73*; they will forward the cards to me. I'll try to make some sense out of it all and let you know what's what in a future RTTY Loop.

AMSAT

OSCAR SATELLITE PHOTOGRAPHS

Full color 8" x 10" photographic prints are available of WA6TUF's artist illustrations of AMSAT-OSCAR 7, AMSAT-OSCAR 8, and AMSAT Phase III for $3.25 each. Also available are custom-painted 16" x 20" duplicates of each illustration. AMSAT-OSCAR 7 is $100, AMSAT-OSCAR 8 is $80, and AMSAT Phase III is $125. Write: Mike Smithwick AA6XI (ex-WA6TUF), 25215 La Lome Drive, Los Altos Hills CA 94022.

Ham Help

I want a copy of the instruction manual and/or schematic for the CDE/CDR TR-4A or TR-11A (series 12307) antenna rotator. Thank you.

M. McDaniel W6FGE
940 Temple St.
San Diego CA 92106

I would sure like to get in touch with Sgt. William "Scotty" Scott ex-DL4ZD. We sort of got out of touch after we both retired.

Russell L. Lawson K1MOU
124 South Grand St.
West Suffield CT 06093

New Products

KANTRONICS FREEDOM VFO

Sitting unused in shacks, on closet shelves, in attics, cellars, and garages all over the country are thousands of perfectly good transmitters in the 20- to 200-Watt range. Why are they collecting dust instead of QSOs? Because they are crystal controlled. On today's crowded bands and with current operating practices, using a crystal-controlled transmitter and a few crystals can be a very tedious and unproductive way to operate. Gone are the days when (as I once did) with as little as 30 Watts and three or four crystals, you could work the world with relative ease and regularity. (I ended up with over 120 countries worked on 10 and 15 meter CW with a base-loaded vertical mounted on the side of the house.)

Those days may be gone forever, but there is no need to let those otherwise perfectly good rigs lie unused, especially in view of the current prices for new equipment. With the addition of a good vfo, all those old Heath DX-20, DX-35, DX-40, HW-16, WRL Globe Chief, Globe Scout, Johnson Viking, and countless other rock-bound rigs can still provide years of good service and lots of QSOs.

Happily, Kantronics' Freedom VFO is just what the doctor ordered. Add it to one of those old "boat anchors" and you'll be ready for action. And, perhaps best of all, you may end up spending only the affordable price of $69.95 for the vfo since the old rigs can often be had for the asking. The unit covers 3.65 to 3.75 MHz and 7.0 to 7.2 MHz. Operation on 15 meters (21.0 to 21.2 MHz) may be possible with the band-switch in the 40 meter position if the transmitter's buffer stage acts as a frequency tripler. Power for the vfo may be furnished by a single 9-volt transistor radio battery or a well-regulated 12-to-15 V dc supply. Current requirement at 9 V dc is 8 mA.

Dial markings are every five kHz on 80 meters, and every 10 kHz on 40 meters. The vernier dial works smoothly and has a good feel. In view of the rather sparse dial calibration points, it would probably be a good idea, as well as reassuring, to use the Freedom VFO in conjunction with a receiver with an accurate frequency calibration source such as Kantronics' The Standard. All of the components of the vfo's two-transistor circuit, except for the tuning capacitor, switches and connectors, are contained on a single small PC board solidly mounted to a heavy piece of aluminum which is secured to the bottom of the cabinet.

The Freedom VFO was tried with the Kantronics Rock Hound 1-Watt 40 meter transmitter and a vintage tube-type home brew transmitter, providing good results with both units. The CW note sounded good and clean when monitored on a Yaesu FT-101B, and signal reports were all T9. Vfo output is 2 milliwatts (1 volt peak-to-peak).

Packaged in an attractive black and gray cabinet, the Freedom VFO measures 3 x 5 x 7 inches. Price is $69.95. *Kantronics, Inc., 1202 East 23rd Street, Lawrence KS 66044.*

Morgan W. Godwin W4WFL
Peterborough NH

GENAVE GTX-800 2 METER TRANSCEIVER

Genave's GTX-800 2 meter FM transceiver created a good impression when the first four contacts made with it produced such unsolicited comments on its signal quality as "beautiful, really outstanding audio," "excellent modulation," "sounds great . . . much better than your other two rigs," and "terrific-sounding signal." Subsequent QSOs have resulted in many more favorable comments on the GTX-800's signal. In fact, it's been downright embarrassing when I've compared the Genave with two other 2 meter transceivers: one, a rather expensive HT of excellent quality, the other, one of the leading multi-mode units. On their own, the other two rigs have always produced good results and received favorable comments on signal quality. However, the GTX-800 outstrips them in audio quality and, when in the 1-Watt (nominal) position, it appears to do about as well as the multi-mode rig does with approximately 10 Watts.

With its coverage of the entire 144-148-MHz range, the GTX-800 provides coverage of the new U.S. repeater subband as well as repeater frequencies in Europe and elsewhere, making it a good choice for the amateur who travels. A VHF, dual-modulus, prescaling, digital, phase-locked-loop synthesizer gives access to 800 channels from 144.0 to 148.0 MHz.

On transmit, the voltage-controlled oscillator (vco) output is on the desired operating frequency with no multiplication. In the receive mode, the vco output frequency is raised by 10.7 MHz, again with no multiplication, to reduce the possibility of spurious responses. Interference from strong signals on adjacent channels is minimized by a 10.7-MHz, eight-pole monolithic crystal filter and a MOSFET receiver front end.

A front-panel mounted meter indicates relative signal strength for signal comparison, antenna adjustments, etc., when in the receive mode; in transmit, the meter indicates when rf power is being delivered by the final amplifier stage.

A two-position switch mounted on the front panel selects either high or low transmit power. In the high-power position, transmit power is typically 25 Watts (20 Watts minimum). With the switch in the low position, power is reduced to 1 Watt (0.5 Watt minimum). The low-power position is internally adjustable up to approximately 5 Watts.

An "out-of-lock" circuit with a red LED indicator is provided to let you know when the synthesizer is unlocked and to disable the transmitter during an "out-of-lock" condition. The LED goes on when the synthesizer fails to lock on frequency. In this event, the transmitter is locked out to prevent inadvertent operation on an unauthorized frequency such as below 144.0 or above 148.0 MHz.

Frequency selection is made with the three front-panel-mounted frequency selector lever switches. These three switches select and display the desired transmit frequency. The left-hand lever selects unit MHz frequencies (144, 145, 146, 147, and 148). The center lever selects tenth-MHz frequencies from .0 through .9. The right-hand lever selects ten kHz frequencies from 0 through 9. For example, 146.600 MHz would be displayed on the lever switches as 6.60 while 146.930 MHz would be shown as 6.93.

A receive-mode switch selects either simplex or +600- or −600-kHz offset for repeater operation. The kHz-frequency switch has two positions, 0 and +5. In the +5 position, 5 kHz is added to the frequency set by the lever switches. As an example, with the lever switches set to 6.60

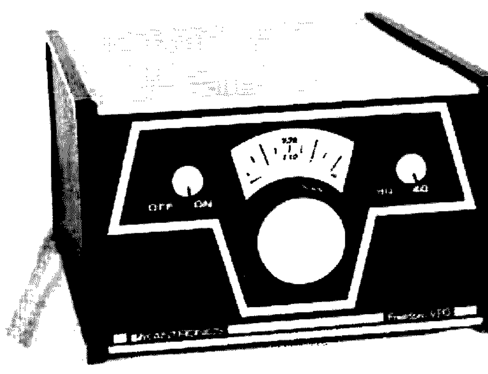

Kantronics' Freedom VFO.

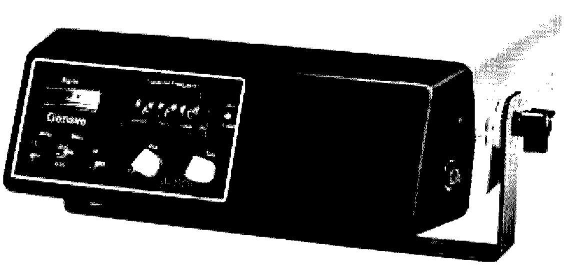

The Genave GTX-800 2 meter transceiver.

and the kHz switch set to +5, the actual transmit frequency is 146.605 MHz. The +5 position also adds 5 kHz to the receive frequency. With the switch set in the 0 position, frequency is as indicated by the three lever switches.

The GTX-800 comes with microphone, power cable, and mobile-mounting bracket. The mobile mount may, if you wish, also be used for fixed-station operation by simply repositioning it below the unit so that it functions as a "tilt-type" supporting stand. Current requirements in the transmit mode are 2.3 Amps in the low-power position and 6.5 Amps for full (25 Watts) power. Genave makes a suitable ac power supply, the model PSI-10, for fixed operation of the GTX-800. Overall size is 3-3/8" × 9-3/4" × 12"; weight is approximately 6 lbs. It is priced at $399.95. *General Aviation Electronics, Inc., 4141 Kingman Drive, Indianapolis IN 46226.*

Morgan W. Godwin W4WFL
Peterborough NH

500 WATT RF TRANSFORMER

Palomar Engineers has introduced a new broadband rf transformer. It matches vertical and mobile antennas to 50-Ohm coaxial cable. Impedance values of 8, 12.5, 16, 22, 32, and 50 Ohms are selected by a panel switch.

The transformer is mounted in a diecast aluminum case 4" x 5" x 2" fitted with UHF (SO-239) connectors. The rf ferrite toroid core is wound with Teflon™ insulated wire and is rated 500 Watts in continuous commercial service. Operating frequency range is 1 through 30 MHz (1 through 10 MHz below 20 Ohms).

The price is $35. Add $2 shipping in U.S. and Canada. For free descriptive brochure, write to *Palomar Engineers, PO Box 455, Escondido CA 92025.*

NEW DPMS FROM NLS FEATURE NEMA/DIN CASES AND LARGE LCD OR LED READOUTS

A new RM Series of Digital Panel Meters has been added to the NLS Thriftmeter DPM line.

The RM Series fit standard NEMA/DIN cutouts. Readouts can be either .6" high LCDs or .5" high LEDs. Electrical connections to meter can be made by PC edge connector or, for industrial users, terminal connections are supplied, depending on the model number ordered.

The RM Series meter case is 1.9" high by 4" wide by 4.2" deep.

The basic RM Series meters are powered by 5 volts dc primary power and measure dc voltage. They will also be made available in configurations that provide the capability of measuring ac voltages and/or being powered by 115 V ac power.

LCD models draw only .002 Amp at 5 V dc.

The basic RM Series meters bear model numbers RM-350 for the LED version and RM-351 for the LCD model. Adding TB to the model number designates terminal connections. /AC specifies an ac input, while /115 specifies a line-powered unit.

Voltage ranges available are .2, 2, 20, 200, and 1000 volts full scale. The .2 V range is not supplied for ac inputs.

Dc accuracy is .1%. The RM meters utilize the latest in LSI chips, which contributes to a low component count and best reliability.

The prices for RM meters start at $59/unit selling price. Quantity discounts make them cost effective for OEM users.

RM-350 and RM-351 are currently available from local electronic distributors worldwide. For details, contact *Non-Linear Systems, Inc., PO Box N, Del Mar CA 92014; (714)-755-1134.*

NEW HAMTRONICS 2 METER CONVERTER

A recent rekindling of interest in 2 meter operation, plus a growing curiosity about OSCAR satellite activity, happily coincided with the opportunity to try one of Hamtronics' new C144 receiving converters. Connected to my FT-101B, the converter outperformed my multimode 2 meter rig by a very clear margin. The converter was received in assembled form but a visual check left me with the impression that even a relatively slow worker such as myself could put one together without difficulty in an hour or two. As explained in their catalog, Hamtronics' kits are not accompanied by the meticulous step-by-step instructions and illustrations provided, for example, with Heathkits®. However, anyone who has even a modest acquaintance with home brewing or kit building will find that construction is simple and straightforward.

The C144 covers the 144-146-MHz portion of the 2 meter band while two other versions, the C145 and C146, cover the 145-147 and 146-148 segments. Standard i-f frequency for the converters is 28-30 MHz. By the way, crystals can be switched to cover multiple band segments, if desired. (Extra crystals for other ranges in the same band are available for $5.95.)

Features of the new design, which replaces Hamtronics' popular C25 series, include easy-to-wind high-Q slug-tuned coils, extensive ferrite bead

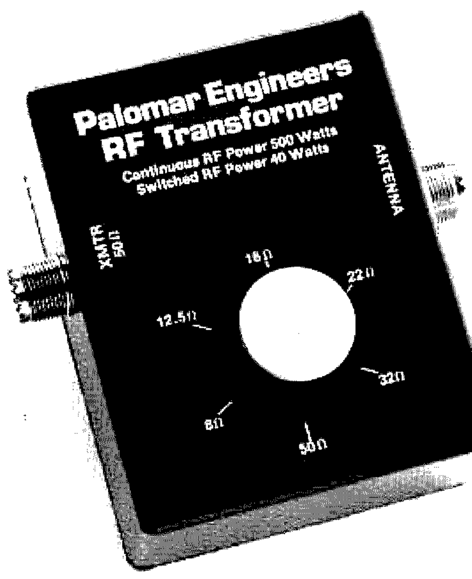

Palomar Engineers' rf transformer.

RM Series LCD (top) and LED (bottom) Digital Panel Meters.

decoupling and compartmentalized shielding, as well as built-in detector circuits for simple injection-chain tuning. Stable, grounded-gate FET amplifier and mixer stages contribute to the converter's excellent performance. Alignment requires only a strong signal source and a VTVM and can be accomplished in a few minutes.

Measuring 2¾ x 4½ x 1 inches, the converter board can be mounted in existing equipment, or a separate case of your own design, or Hamtronics' model A9 Case Kit. The case kit is a 2-7/8 x 4-5/8 x 2-inch extruded box with an attractive brushed aluminum finish. The top panel is machined for BNC jacks which are included, as are phono plugs and cable for connection to the converter board.

The C144 and its other 2 meter versions are just one example of an extensive and growing line of receiving and transmitting converters, exciters, amplifiers, preamps, and other items for the VHF/UHF enthusiast. If you've got an HF rig and are contemplating satellite operation, you'll certainly find Hamtronics' complete line of modules and accessories an excellent way to get in on the OSCAR fun and excitement with a setup that combines flexibility, simplicity, ease of construction and alignment, high performance, and modest cost.

Price of the C144, C145, and C146 2 meter receiving converter kits is $34.95. The A9 Case Kit is $12.95. A new free catalog describing the complete Hamtronics product line plus many other items including hard-to-find components is available on request. All Hamtronics products are available from *Hamtronics, Inc., 182 Belmont Road, Rochester NY 14612.*

Morgan W. Godwin W4WFL
Peterborough NH

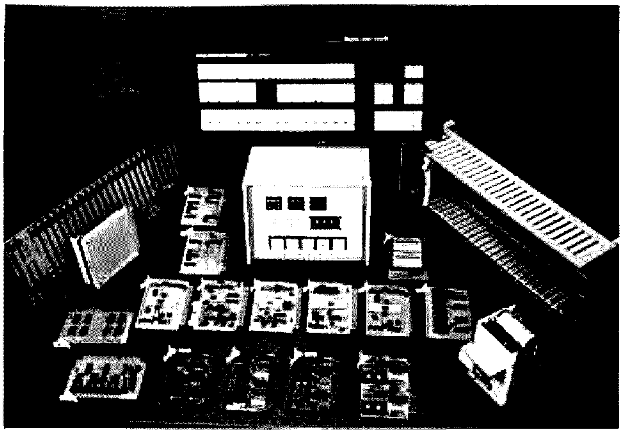

Wyle's digital logic modules.

SINGLE IC FOR KEYBOARD KEYER

A single IC containing most of the electronics for a deluxe keyboard keyer has been introduced by Curtis Electro Devices. Called the 8045, the 40-pin CMOS device uses one or more FSC 3341s, a Curtis 8043 or 8044 keyer, and a set of keyswitches to produce the equivalent of the Curtis KB-4200 keyboard keyer *including* an electronic paddle keyer. By adding the new 8047 Message Memory Control IC, 2102 RAM, and a 4028 CMOS decoder, the equivalent of a KM-420 memory is added.

The 8045 allows a nominal fifty-seven position keyboard containing all the commonly used letters, figures, punctuation, space bar, and special characters (AA, KN, AS, SK, AR), all without shifting. It affords two-key rollover for "burst" typing; 32-, 64-, or more character storage for smooth transmission; access to four message memories via buffer; analog output for buffer status meter; full- and empty-buffer indication, plus a preload function. It operates from +5 V dc and requires less than 10 mA of supply current.

Priced at $59.95 in single quantities, the 8045 is available from stock. A semi-kit (8045-1) containing the 8045, 3341, PCB, sockets, and edge connector is priced at $89.95. (The 8044-4 keyer semi-kit is priced at $54.95.)

For further information, contact *Curtis Electro Devices, Inc., Box 4090, Mountain View CA 94040; (415)-964-3136.*

DIGITAL LOGIC MODULES

The Wyle line of digital logic includes over 200 modules covering all types of logic elements. Available on the 3¼" x 4½" modules are gates, flip-flops, decoders, counters, one-shots, line drivers/receivers, electronic switches, and many more. Additional modules include relays, test-point modules, extenders, lamp, toggle switch, and a wide variety of socket, wire-wrap, and blank modules. Also available are card files and card drawers for rack-mount or custom installations and logic power supplies.

The Wyle logic line is also fully compatible with the Wyle uP Series microcomputer.

For additional information, contact *Wyle Laboratories/ Computer Products, 3200 Magruder Boulevard, Hampton VA 23666; (804)-838-0122.*

CSC DM-1 DESIGN MATE® COMBINES SOLDERLESS BREADBOARD, METER, AND POWER SUPPLY FOR ELECTRONIC LAB STUDY

The Continental Specialties Corporation Model DM-1 Design Mate® provides the three elements most basic to electronic circuit investigations—a power supply, breadboarding area, and meter—in one convenient package for $69.95.

The meter measures 0-15 V dc (5% accuracy) and is independent of the power supply, with leads brought out to a pair of five-way binding posts. Thus, the meter can be used to set the adjustable power supply's voltage, and then to monitor circuit action.

The built-in power supply is adjustable from 5-15 V dc output at up to 600 milliamps, with better than 1% load and line regulation and less than 20 mV ripple and noise at full load.

The solderless breadboarding area is configured from CSC QT-series ("Quick Test") socket and bus strip elements. It provides enough area to comfortably breadboard a circuit with 6 DIP ICs, plus associated components.

The compact 3 pound DM-1

Continued on page 37

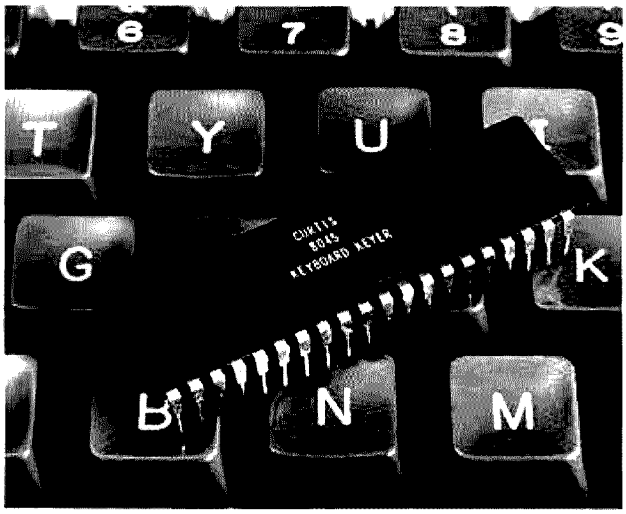

The Curtis 8045 keyboard keyer.

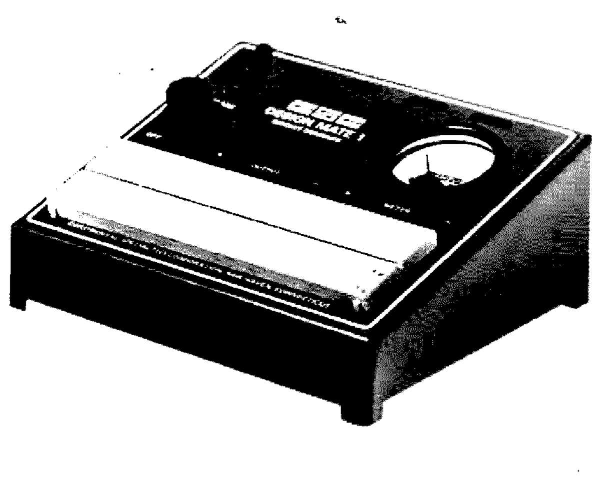

CSC DM-1 Design Mate®.

Earle Grandison K6WS
11657 Gladstone Circle
Fountain Valley CA 92708

Four-Wheel Frenzy!

Hams and the Baja Internacional

Antennas at El Rodeo, checkpoint six.

June and November are special months to many hams in Mexico, California, and other western states. From many areas, they converge on San Diego or Mexicali for points south. They come in cars, 4-wheel drive vehicles, luxurious motor homes, trucks, and airplanes. It's Baja time! Baja 1000 and Baja Internacional have become everyday words in many ham shacks. XYLs know it's time to pack up supplies and camping gear, and the harmonics look forward to three or four days of fun and freedom in the friendly XE2 land.

During the late 1950s, the first automobile drove over 900 miles of the rugged, rough, and rocky Baja Peninsula from Ensenada to La Paz. The drivers made their own route where there was none. Racing began over the route from Ensenada to La Paz in 1965. These early events were loosely organized. However, from the beginning, radio amateurs operated portable stations along the way, relaying information and keeping track of the racers' safety. The amateurs drove incredible roads to camp in lonely, wildly beautiful spots. They erected portable antennas, brought their own generators, and experienced hurricanes, torrential rains, dust storms, hot, humid days, blizzards, and cold shivery nights, never failing to provide the type of communications for which

amateur radio has become famous.

Although the early Baja races were from Ensenada to La Paz, completion of Mexican Highway 1 along the old route necessitated establishing a new course in the early 1970s. The new route was a loop instead of a line which terminated in La Paz, 1000 miles south of the United States border. Recent races have started and ended in Ensenada.

About the same time as the course was changed, in 1972, the Southern California Off-Road Enthusiasts (SCORE, Int.) was organized by Mickey Thompson, a top racer, to sponsor future events. In 1975, Sal Fish, former publisher of *Hot Rod Magazine*, became president of SCORE, Int. Under Sal's leadership, SCORE has grown even stronger. Each event sees increased participation and interest. SCORE has improved relations and negotiated long-term agreements with the Mexican government to insure the future of off-road racing on the Baja Peninsula.

During this period of off-road racing's development, the amateurs who participated in these events formed an unofficial organization which became known as the Baja Amateur Racing Fellowship, or BARF. BARF was soon changed, for obvious reasons, to the Baja Amateur Radio Racing Association, familiarly known as BARRA.

Early communications used HF SSB amateur bands. The first use of VHF FM for an off-road racing event was in 1975 when the Anaheim Amateur Radio Association provided communications for the Big River 400 race out of Parker, Arizona, on 146.52 MHz simplex. VHF FM and VHF repeaters have been used for all races since, as well as HF SSB.

The 1977 Baja Internacional was the largest off-road race in history with approximately 450 entries. They ranged, in eleven classifications, from motorcycles to 4-wheel drive trucks. All competed over the same course for overall honors, as well as for individual classification awards.

Extensive communication circuits are necessary to handle the volume of traffic for such an event. Amateur radio stations using the callsign XE2BCM are authorized by the Mexican government to provide communications for the duration of the race. These operations are coordinated with the Mexican National Radio Amateurs and the Liga Mexicana de Radio Experimentadores, A.C. BARRA wishes to extend special thanks to the members of the Ensenada Radio Club, owners of the fine 146.22/.82 repeater in Ensenada, who graciously allowed its use for interunit communications while the BARRA network was being installed.

This network was designed to provide up-to-the-minute vehicle passing times at each numbered checkpoint directly to Ensenada Race Control. Passing times are computed, and the standings of the leading racers are continuously available.

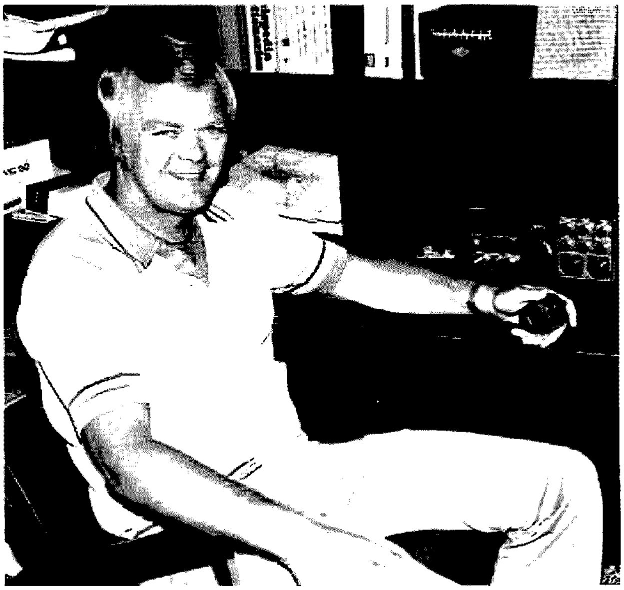

WA6GQF coordinated race communications.

Portable stations were located at the start/finish line, Ensenada Control, and seven major checkpoints. Two aircraft and five off-road mobiles provided communications from any section of the 430-mile course and to the paramedic teams.

The race course climbs rapidly after leaving the starting line, going over the mountains, past Ojos Negros, to the first checkpoint at El Rayo, which nestles in lovely high mountain pine groves. There it turns south through the ruins at Santa Caterina before challenging the formidable Sierra de Juarez. It soars over rugged Jamalu Summit and descends rapidly to the hot sandy desert, passing checkpoints 2 and 3 as it continues to the picturesque seaport city of San Felipe on Baja's

K6WS reports injured driver's condition to Ensenada Control.

Racers passing Nuevo Junction.

eastern coast. Most of the racers make a pit stop in San Felipe before departing to the west into the dry barren Laguna de Diablo. The foothills of Picacho del Diablo are a welcome relief after several hundred miles of dusty desert. The course steers through Mike's Sky Ranch, the road stretches out, and the race for Ensenada is stepped up. Once past checkpoints 6 and 7, the racers challenge the mountains guarding the finish line at Ensenada.

Many vehicles fail to finish. A simple form called a "stuck stub" is carried by each driver. If disabled, he sees that his stuck stub is delivered to the officials at the next checkpoint, where the information is transmitted to all stations. Officials and racing teams can keep track of their entries by periodically checking the posted stuck stubs.

Trained paramedics stationed at the checkpoints are dispatched by the chief paramedic through the radio network. Mobile units can accompany the paramedics to provide communications directly at the scene of an accident.

This year, more than fifty members of BARRA and their families made the long trek to the remote areas of Baja. Hundreds of hours of planning had already gone into preparing for this event. BARRA's technical committee had completed three new VHF solid state repeaters using Motorola components. They are designed for unattended battery operation because of a blizzard during last November's Baja 1000 which forced the repeater crew to evacuate Mt. Diablo with the vacuum tube repeater and 5 kW generator, leaving the network to function on the HF SSB circuits only.

All stations have emergency power sources provided by the amateurs. Ensenada Control used its own standby generator extensively during the 1975 Baja Internacional when a helicopter hit power lines and caused a sustained power blackout in the city.

BARRA obtains the necessary practice to achieve and maintain a high level of emergency preparedness by providing routine communications to organizations such as SCORE. Each event generates different solutions to difficult communication problems, and experience enables BARRA to become more efficient. This is important to the achievement of BARRA's primary objective of being able to establish and maintain an organized communications system during emergencies to assist law enforcement and relief agencies.

Net control was located at the Baja Internacional Race Headquarters at the Bahia Hotel in Ensenada. The 75 meter SSB transceiver used an inverted vee antenna. A 22-element beam and 100-Watt

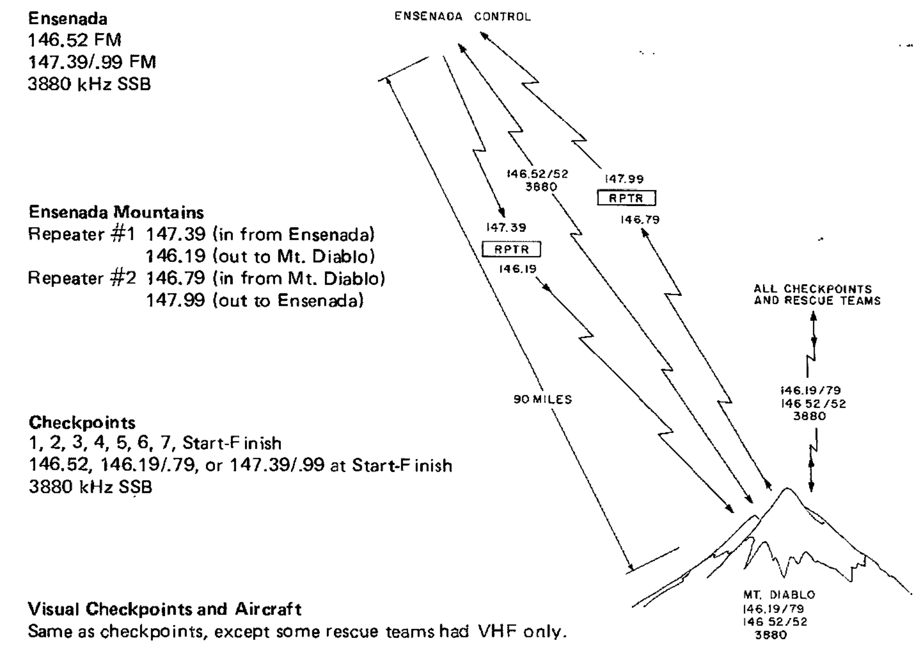

Baja Internacional communications system.

VHF FM transceiver provided direct communications with Mt. Diablo 100 miles away.

A solid state repeater with a vacuum-tube backup was installed on Mt. Diablo. A cavity and 9 dB collinear antenna could be used by either repeater. Although the primary 146.19/.79 repeater was designed to run on battery power throughout the race, a portable 5 kW generator was used to power the 100-Watt simplex VHF transceiver, HF SSB transceiver, and the backup repeater. All of this equipment was transported more than sixty miles each way from the highway to be installed at the 9400-foot level of the 10,126-foot mountain, the highest in Baja.

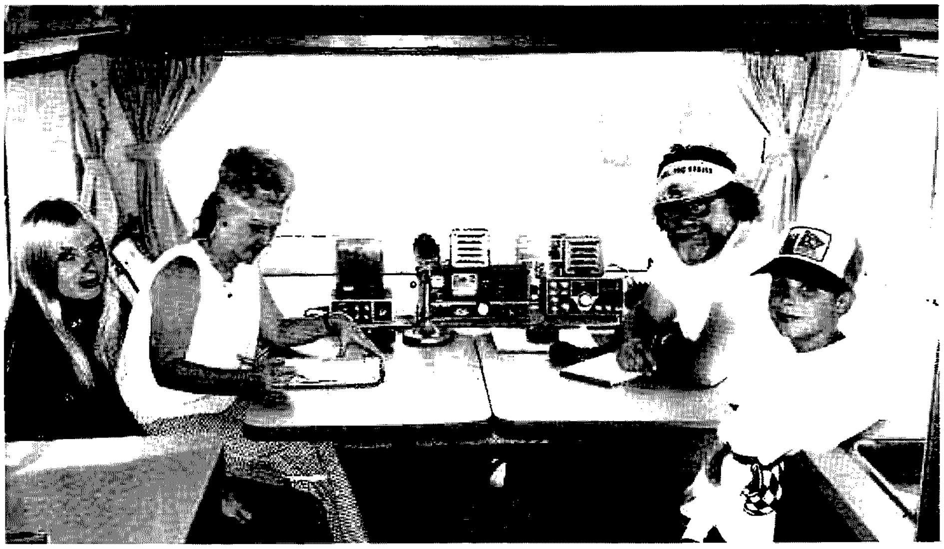

El Rodeo, checkpoint 6.

Many of the checkpoints are inaccessible except by 4-wheel drive vehicles. The radio team for checkpoint 3 spent the night before the race in a Jeep trying to reach the assigned location, only 10 miles from a major highway.

For those who like to be close to nature, Baja offers many attractions. The mobile unit at Nuevo Junction reported seeing two rattlesnakes within the first thirty minutes.

All stations had checked in on site by 8:00 pm on Thursday, except for checkpoint 3, whose staffers reported that they were still underway despite deep sand conditions.

The VHF link repeaters installed on the mountaintops around Ensenada operated on 147.39/146.19 and 146.79/147.99. This allowed VHF units using 147.39/.99 in Ensenada to tie directly into the primary 146.19/.79 repeater atop Mount Diablo.

The race began at dawn Friday. Checkpoint 1 reported the first motorcycles an hour later and the first 4-wheel vehicles fifty minutes after that. Interest at race headquarters rose perceptibly with each passing moment – "Who's in the lead?" "Who's behind him?" Answers to these questions began to pour from the SCORE computers. Operators along the network were busy copying passing times and stuck stubs. This constant activity continues all day and throughout the night. Questions were being asked – "Where is 321?" "Out of race at Nuevo Junction." "Driver OK." Concerned parties were kept informed via radio throughout the race.

At 11:30 am, a mobile unit reports an accident in the mountains. Paramedics are dispatched. Angel 1, an aircraft mobile unit, is contacted and heads for the area. Routine traffic continues to flow over the network. Reports come into Ensenada advising them of the driver's condition. Another mobile unit is directed to pick up a doctor at Valle de Trinidad and rendezvous with the rescue team on the highway near checkpoint 6. Angel 1 contacts the crew at checkpoint 6 to obtain information on the possibility of landing. Ensenada approves and Angel 1 lands at El Rodeo.

Another accident occurs at El Rodeo, so Angel 1 is told to leave with this injured driver while the paramedic team continues on the highway to Ensenada. Medical authorities are able to make efficient decisions with up-to-the-minute information available through the BARRA network.

During the hot afternoon, a helicopter is dispatched in answer to a paramedic team's request to transport an injured driver in the eastern desert.

An amateur operator in Vista, California, keeps emergency facilities in San Diego informed of rescue activities. Because of his efforts, everything is ready when injured drivers arrive later in San Diego.

Ensenada Control authorizes closing checkpoint 1. The radio team leaves to become a mobile team at Ojos Negros to provide communications in case of trouble where the course crosses the main highway from Ensenada to San Felipe.

At nightfall, another paramedic team is dispatched to a remote area. The team requests that an ambulance meet them at the highway when they come out, and an efficient effective transfer is accomplished.

The use of amateur-radio-equipped mobile units and aircraft in the communications plan made it possible to communicate from Ensenada Control to rescue units at the scene for the first time in Baja off-road racing. This contributed greatly to driver safety. SCORE regulations are very strict concerning safety rules, and BARRA is proud to play its part with efficient communications.

Toward the end of the race, when most of the cars are past the finish line, the "sweepers" began their lonely trek from one checkpoint to the next to report abandoned vehicles along the course and pick up any lonely drivers who may be discovered along the way. Many of the sweepers are radio teams on their way back to the highway after the last racer has passed. The radio voices in the night are reassuring to the tired hams as they make their way down the rough worn course and on to Ensenada or Mexicali.

Relatives and friends receive reassuring news about drivers and learn where a few unreported race cars are located. By dawn, only a few stragglers are still on the course. The pit crews and spectators have gone. The tired radio operators dismantle their antennas, pack their equipment, and head back to their home QTHs. They are already thinking of the next Baja race, planning new and better methods for next time, and carrying with them a sense of pride in a job well done. ■

E. E. Buffington W4VGZ
2736 Woodbury Dr.
Burlington NC 27215

T-R Exotica

—*rf switching with PIN diodes*

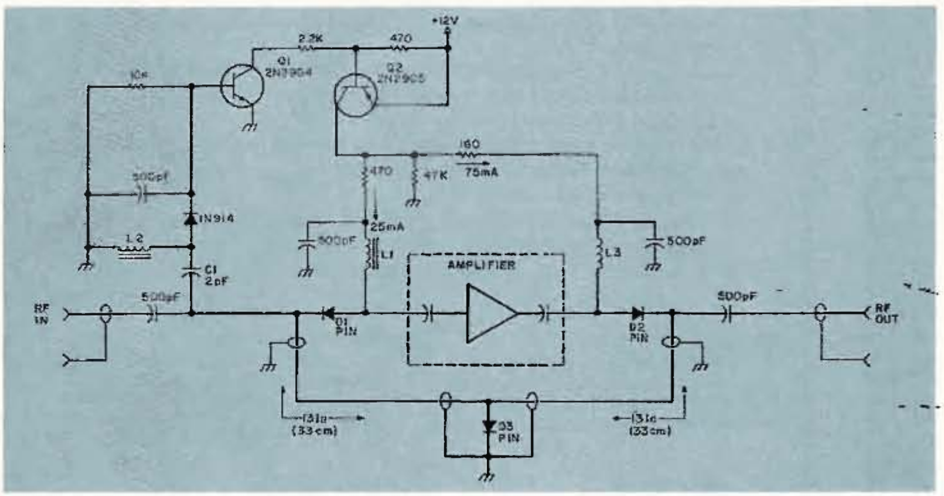

Fig. 1. PIN diode rf switching.

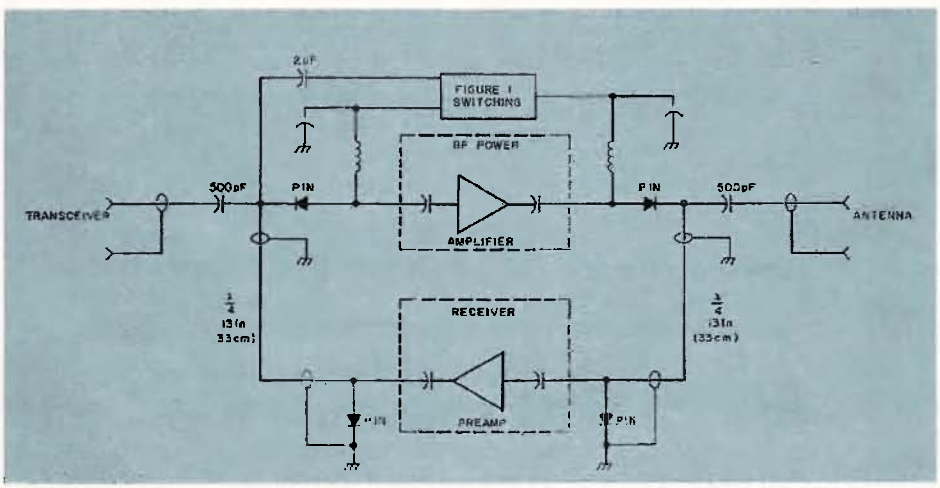

Fig. 2. Power amplifier and preamplifier switching scheme.

I always thought that exotic parts like PIN diodes were not for ordinary folks like hams—we should just stick to the "meat and potatoes" and leave the space-age components to the scientists. It was only after I learned the law of this part (how it works) that I discovered a really neat application.

How It Works

Its name describes its construction: P stands for P-type semiconductor, N stands for N-type semiconductor, and I stands for intrinsic (no P or N doping). If you put a forward bias on the diode, it will conduct. Back biasing the diode will result in no (very little) current flow. That's just like a conventional diode, right? What is happening is that, in the forward bias case, there are excess (free) electrons in the intrinsic region. Moreover, the electrons will remain in this region for a few microseconds after the bias is removed. The time is called the "majority carrier lifetime" and is a property that can be put to use. The reverse bias

properties that are useful are a high resistance and an extremely low capacitance, typically tenths of picofarads. At zero bias, the capacitance is only 1 or 2 picofarads.

This diode can pass Amperes of rf power with only a few millamperes of dc bias. The secret is in the long "lifetime" property. If the period (1/f) of the rf is shorter than the lifetime, then, during the time the rf voltage is reversed, there will be enough electrons in the intrinsic region to allow conduction.

Application

The circuit in Fig. 1 shows how I used three of these diodes to switch a two-stage two meter amplifier. You can see from the photograph that the circuit board was made by the cut-and-peel method. Locate the quarter-wave lines, and you will find the diodes at the ends. This amplifier is used with 2 Watts input and 45 Watts out and is utilized to boost my hand-held portable while in the car.

The two quarter-wave transmission lines are made with RG-188; you could use any of several kinds of small 50-Ohm cable. The small capacitor is a gimmick made of 20-gauge insulated wire, twisted for 3/4" (2 cm). This capacitor couples a small amount of rf, which is detected, filtered, and used to turn on the NPN switching transistor, Q1. This then turns on Q2 (a PNP switching transistor).

The 100 milliamperes of collector current divides, with 25 milliamperes through D1 and the other 75 milliamperes through D2. The current recombines in D3. This small amount of dc is enough to pass 45 Watts! The low impedance of D1 couples the input power to the amplifier. The low impedance of D3 is reflected as a high impedance at both the input and output. During receive, the diodes are zero biased and have a capacitance of only one picofarad or so. The receive signal, therefore, takes the bypass route through the quarter-wave sections, as the diodes now present a high impedance.

Preamp Switching

The circuit in Fig. 2 is offered as a suggestion for those who enjoy adventure. This one will give a boost both going and coming.

I just don't have the nerve to put a sensitive, delicate receiver preamp in the same box with that brute. I have not tried this, so don't blame me if rf eats your preamp up! Seriously, though, it ought to work just fine.

Up Your Coax

Why not supply the required 12 volts via the coax and put the amplifier/preamp right at your antenna? It won't do much for transmit, but it should give you an advantage over the coax loss for receive. Use chokes to isolate the dc from the rf, as shown in Fig. 3.

Diode Source

The first diodes I tried were expensive microwave types that were discarded from a test-and-evaluation program. Exotic parts like this rarely find their way into the surplus market, so, after I decided to write this article, I began to look for an inexpensive dependable diode source. Unitrode has such a diode—part number UM4001B.

I will gladly correspond about this and other articles I have written if you will send an SASE.■

Reference

James K. Boomer W9KHC, "Pin Diode Transmit/Receive Switch for 80-10 Meters," *Ham Radio*, May, 1976.

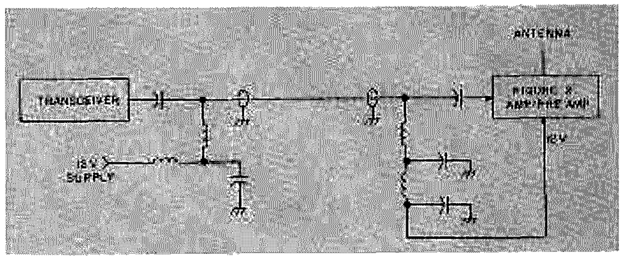

Fig. 3. Send 12 volts up your coax to supply the amp/preamp located near the antenna.

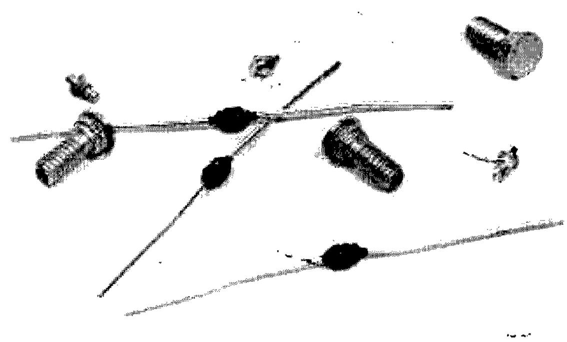

PIN diodes come in many shapes.

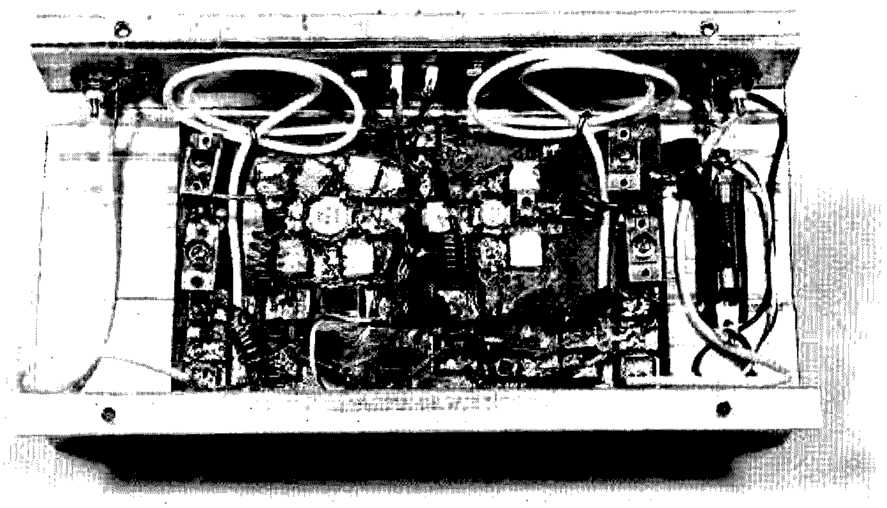

A two meter amplifier with PIN diode switching.

The Autodialer Revisited

—a circuit board and other improvements

William Hosking W7JSW
8626 E. Clarendon
Scottsdale AZ 85251

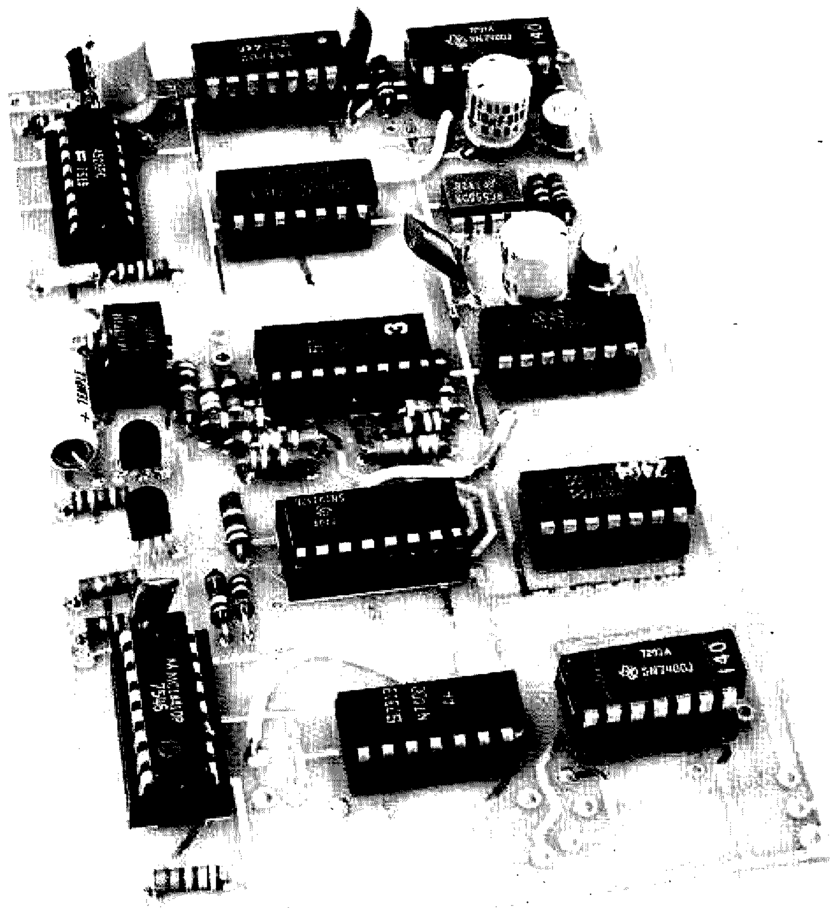

Photo A. This is a photograph of the completed autodialer printed wiring board. The memory (center) should always be in a socket.

It often happens that six months to a year elapses between the time an article is purchased and the time it is out in print. Also, it may take a couple of months to put an article together. Therefore, it may be as much as two years between the time an article gets designed and the time it gets into print. For various reasons, my autodialer (*73*, February, 1977) took almost 2½ years, and, in that time, several things came about which I felt might be of interest to you.

The first thing that happened was that there was

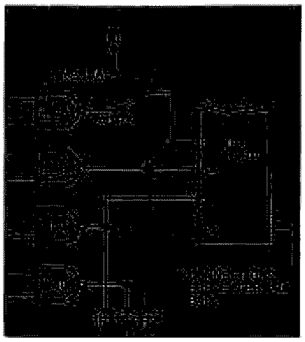

Fig. 1. Partial schematic of the autodialer. S1 is the added SPST switch in order to use an external pad.

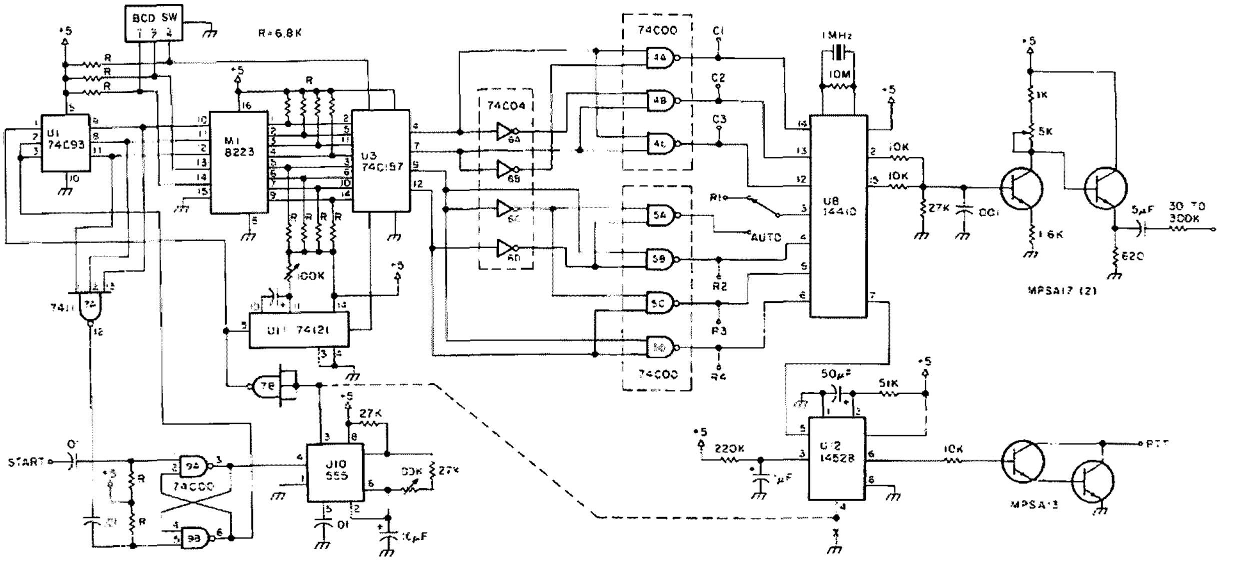

Fig. 2. Complete schematic of the dialer. All resistors marked R are 6.8k, ¼-Watt, 10%. A printed wiring board is available from W7JSW.

sufficient local interest from my friends that I developed a board for it. The circuit was moderately complex and a board made the thing a whole lot easier to put together. Photo A shows the completed circuit board. The boards are available from me for $13.50 ppd.

Circuit Changes

One problem came to light very early with the eight-number version of the dialer. The necessity to encode two memory lines to four row select lines left no unused code. This means that the R1 line is active all the time the device is idle. The way the device (14410) works, this presents no direct problem since no tone will be sent until both a row and column are energized. What it did do was make it impossible to use an external pad switch with the dialer. Addition of an SPST switch took care of this problem with little effort or expense. The change is shown in Fig. 1.

I had a couple of complaints about the power consumption which I largely ignored, not wishing to either lay out the printed wiring board again or redesign the circuit (I'm kind of lazy). Another obstacle to redesigning the circuit was the absence of an eight-bit, low-power, field-programmable read-only memory. Well, in the couple of years since the circuit's inception, a line of pin-compatible TTL to CMOS devices was introduced in the 74Cxx line. In this line, a 74C00 is a pin-for-pin replacement for a 7400, only CMOS instead of TTL.

I looked the old circuit over carefully for circuit loading and device types and came up with seven TTL devices that can be replaced with CMOS substitutes. Table 1 shows the devices replaced and shows that they should save about 100 to 150 milliamps. If you are just building up the circuit, you can change the 4.7k pull-up resistors to 6.8k with no degradation of circuit performance.

A couple of people have told me that the transistor PTT switch will not pull their PTT line low enough to properly key the transmitter. In this case, I recommend driving a low-power relay with the output switch and then use the relay contacts to key the radio.

Depending on how fast you run the dialer and how slow your transmitter comes up, you can lose anywhere from half to all of the first digit tones. One remedy for this is shown in Fig. 3. With this connection, the PTT switch operates off the clock and therefore comes up earlier. This connection is shown as a dotted line in the schematic of Fig. 2.

DEVICE	CURRENT	DEVICE	CURRENT
7400	20	74C00	2
7400	20	74C00	2
7400	20	74C00	2
7404	30	74C04	2
7493	26	74C93	4
74157	30	74C157	4
TOTAL:	**146**	**TOTAL:**	**16**

Table 1.

By way of alternate (or devious) assembly methods, a local ham concocted a small version of the dialer using wire-wrap techniques instead of printed circuit board. He could not find real small thumbwheel or other BCD coded switches so he used miniature toggle switches coupled with a BCD to 7-segment decoder and LED to give a readout of the selected phone number.

Conclusion

The board turned out quite well, and the change to CMOS has cut the current consumption way down. As time goes on, I'm sure I'll

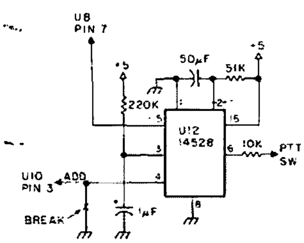

Fig. 3. Circuit modification to allow the output switch to start with the clock.

come up with more changes or modifications.

If any of you have come up with something neat using this or any of my circuits (for example, using the dialer with a microcomputer), I'd love to hear about it. If you write and want a speedy reply, though, please include an SASE. For those who might not have the February, 1977, issue of *73* handy (heaven forbid), I have included the complete schematic of the dialer as Fig. 2. ■

Watergate Special

—create your own 18-minute gap

Toni Ruepp HB9BLU
Landstrasse 169
CH5422 Ob. Ehrendingen
Switzerland

There are a lot of little things you could build and make use of. You only have to grab around in the junk box and then develop ideas. One such item is the following. It doesn't cost you one cent, but it can be very useful.

There are many reasons why you might want to erase a tape before rerecording on it. Also, you may have to erase a recording very quickly. This could be a help for secretaries who want to erase a dictation after the letter is written, or for members of the government after they've been elected . . .

The construction is very easy. All you need is an old final transformer (tube-type, with an impedance of about 7k Ohms), a bell switch (isolated, good for your line voltage), and a plastic box.

The transformer must have an E/I-shaped core. Remove the I part of the core, cut the secondary wires (heavy wires), and put the transformer into that plastic box. Wire it according to Fig. 1, and glue it with epoxy. Then seal the box, so nobody can get an electrical shock.

Here's how to use it:

1. Put the cassette on top of the (hidden) transformer.
2. Push the button and move the cassette around in the magnetic field for about 3 to 8 seconds.
3. Remove the cassette and then release the button.

Do not exceed 10 seconds, as the coil might get too warm, especially when using 220 V.

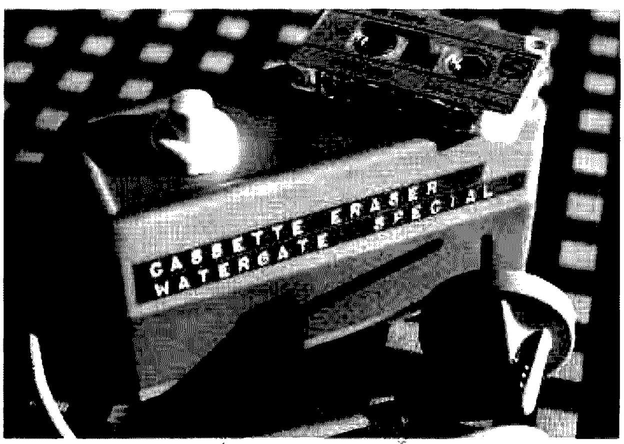

The Watergate special.

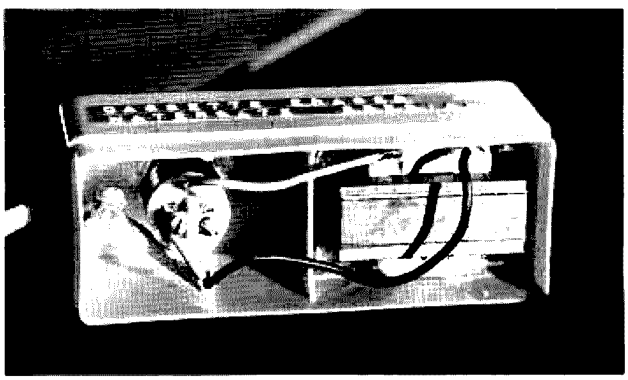

Bottom view.

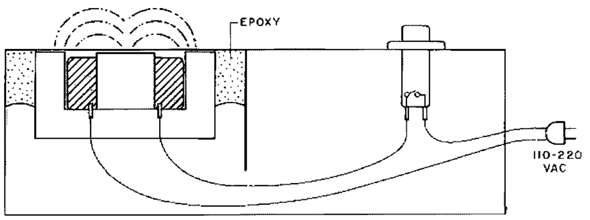

Fig. 1.

This way of demagnetizing tapes works very well, and the disadvantages of other ways do not exist. There is less noise on the tape, and there are no magnetic springs in the cassettes. ■

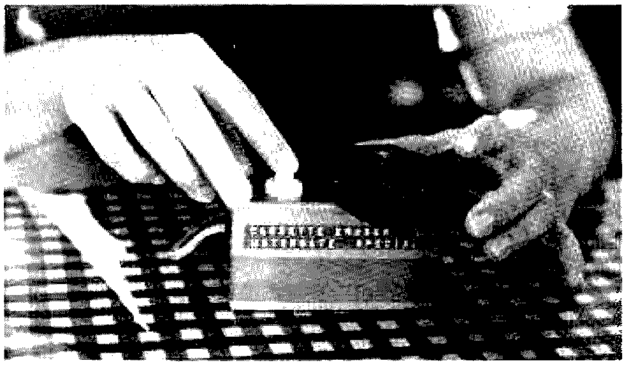

How to use it.

New Products

from page 24

package requires only 12 Watts or less at 117 V ac, 60 Hz. A 220 V ac 50/60 Hz version is also available at a 10% additional cost.

The DM-1 is one of four instruments in CSC's Design Mate series. For additional information, contact *Continental Specialties Corporation, 70 Fulton Terrace, New Haven CT 06509; (203)-624-3103.*

HEATH 100 MHZ TO 1 GHZ BIDIRECTIONAL WATTMETER

Using Heath's new Bidirectional RF Wattmeter Model IM-4190, I've been able to tune up my 2 meter rig and antenna system so that it's working more efficiently and effectively than ever before. Now I'm looking forward to using it to get a 70 cm mode J setup going so I can join the activity taking place via OSCAR 8.

A simple, easy-to-assemble one evening project, the RF Wattmeter measures rf output up to 300 Watts within the frequency range of 100 MHz to 1 GHz. There are three switchable ranges for forward power (30, 75, and 300 Watts) and three for reflected power (3, 7.5, and 30 Watts.) The 3-Watt range is read on the 30-Watt scale. Power is read directly in Watts in both forward and reflected positions. Swr may be readily determined by referring to the graphs on page 11 of the illustration booklet that accompanies the kit, or by using the formula on page 33 of the assembly and operating manual.

Housed in a small, attractive blue and white cabinet, the RF Wattmeter is an easy-to-use, self-contained unit that does not require additional plug-in "slugs" or modules to cover its power and frequency ranges. Power is obtained from a 9-volt transistor radio battery (NEDA #1604). The Wattmeter's portability is enhanced by a large D-ring handle on the rear of the cabinet that can be snapped onto a belt hook, making it convenient to use on towers and in other situations where both hands must be used for climbing or making adjustments.

Assembly of the Model IM-4190 RF Wattmeter makes a nice evening's project. Everything goes together in a smooth and trouble-free fashion. Initial test and adjustment may be done in a couple of minutes using a small screwdriver. Calibration requires more time and equipment. To accurately calibrate the RF Wattmeter, you will need a signal generator capable of producing a signal in the 400-MHz range with a variable power output from 3 to 300 Watts, a power meter capable of measuring the frequencies and power levels previously mentioned, and an rf load which presents an swr of 1.1:1 or better. The accuracy of the RF Wattmeter will, of course, depend upon the accuracy of the calibration instruments.

Calibration of my own Wattmeter produced the following readings:

Forward

30-Watt range = 30 Watts
15-Watt range = 15.5 Watts
75-Watt range = 75 Watts
300-Watt range = 302 Watts

Reflected

30-Watt range = 30 Watts
7.5-Watt range = 7.6 Watts
3-Watt range = 3 Watts

The RF Wattmeter may be permanently connected between the output of the transmitting equipment and the transmission line to provide an accurate means of determining the swr in the transmission line and terminating load, and as an aid in tuning the equipment for optimum output. Cables with either Type N or UHF (50-Ohm) male connectors may be used with the Wattmeter (do *not* use UHF connectors and UG-146/U coax adapters for frequencies above 300 MHz). By the way, Heath thoughtfully includes a pair of UG-146/U Type N to UHF adapters with the kit.

The Wattmeter may be used with any matched transmission line without affecting equipment performance. If, however, there is a mismatch in the line, prepare a four-inch length of cable with connectors to replace the length of line lost when removing the unit from the line. Before using the Wattmeter, always turn the function switch to the BATTERY CHECK position and observe if the pointer falls within the BATT OK range of the meter scale. If the battery does not check OK, replace it before proceeding.

For use in the forward or normal mode of operation, your transmitting equipment should be connected to the input of the Model IM-4190 RF Wattmeter and the antenna or dummy load to the load connector. However, the RF Wattmeter is *bidirectional*, enabling you to connect equipment with limited output in the reverse or reflected direction. A couple of typical examples of use for the Wattmeter in the reverse mode would be determining if an extreme mismatch exists in the transmission line or at the load, or, using it as a peaking indicator to adjust your equipment in the same way as when the unit is connected in the normal (forward) mode.

With the RF Wattmeter connected in the reverse mode, it becomes an excellent tuning aid when tweaking a low-power rig for optimum power output, particularly when set to the 3-Watt range, since the reflected power scales actually show forward power. Of course you seldom get something for nothing, and when using the RF Wattmeter in the reverse mode, the reflected readings taken from the forward ranges are of such negligible values as to be of little use in determining swr.

An important feature of the Wattmeter is that it is capable of withstanding full-power overloads on its lower scales without damage to the meter movement.

The Bidirectional RF Wattmeter Model IM-4190 kit retails for $114.95 and an assembled version, the SM-4190, is $195.00 (mail order from Benton Harbor). *Heath Company, Benton Harbor MI 49022.*

Morgan W. Godwin W4WFL
Peterborough NH

10 METER CB

American Crystal Supply Company's Engineering Department has put together approximately 55 different 10 meter kits which convert relatively inexpensive SSB CB rigs to cover any part, or all, of the 10 meter band. Kits are available for the Novice segment only, or phone band only, or both.

The builder can request an order form and pick the kit that will best suit his needs, or he can send them the make and model number of his radio. They will then send him the appropriate kit, if available. If not, they will make a kit especially for him.

The prices range from $10.00 for the Novice band only, to $40.00 for the super-deluxe full-band kit on certain radios, depending on the parts required for his radio. Prices vary, but most will run under $20.00 for full 10 meter coverage.

Continued on page 42

Be Legal

—build an ID reminder

Ronald Miles AD4A/WA4MFY
RFD 1, Box 216
Rustburg VA 24588

Although several designs for highly accurate ID reminders have appeared recently in amateur radio publications, they have generally fallen into one of two categories. Either they are intended for use with specific digital clock circuits, or they have been designed as units in themselves, having digital readouts or various other options. Many operators, though, may have already purchased one of the inexpensive clock kits on the market today. They make excellent station timepieces and, with the addition of the circuit below, may also be used as precision ID reminders.

In addition, since the circuit is complete in itself, normally requiring only power and a line-frequency input from the unit to which it is added, it may be used in various other ways. For example, one might add it to an existing transmitter or receiver so that the digital dial or pilot lamp would begin to flash when it's time to identify. Its usefulness is further enhanced by the fact that it may be preprogrammed for various delays, and it can be made to operate with a line frequency of fifty, as well as sixty, Hertz. Also, supply voltage requirements are not at all critical, as anything between six and fourteen volts will suffice. The cost of the unit is minimal. The basic timer can be built for approximately six dollars. If the optional power supply and indicator circuit are also used, the cost will run a few dollars more.

The circuit is shown in Fig. 1. Here a 110-volt power supply has been added, as well as IC5, which is used to drive an indicator circuit. If the unit is to derive its power from existing equipment, components T1, D5-D8, and R8 may be eliminated. In addition, C2 may be reduced in value and, in some cases, deleted. If the circuit is to drive a high-impedance load, such as the enable of a clock chip, IC5 and its associated circuitry may also be eliminated. As shown, the 60 Hz (or 50 Hz) waveform is injected at point "A". For reliable operation, it should have a peak amplitude anywhere between V_{dd} and $2V_{dd}$. Thus, if the supply voltage used was 10 volts, the peak value of the input waveform could be anywhere between 10 and 20 volts. This will always be the case if the input is derived directly from the transformer, as shown, but, if other means are contemplated, the above should be taken into consideration. The signal passes through D1, which eliminates the negative half cycle, to the low-pass filter consisting of R2 and C1. It then enters a Schmitt trigger consisting of IC4A, IC4B, R3, and R4. The low-pass filter and the hysteresis of the Schmitt combine to make the circuit insensitive to any rf or noise present on the input waveform. The high gain of the circuit produces a square wave at pin 9 of IC4B which will adequately drive the clock input of IC1, a 4020 binary ripple counter. By tying various output combinations from the counter to AND gate IC2, various timing intervals may be selected. That of the circuit hereafter

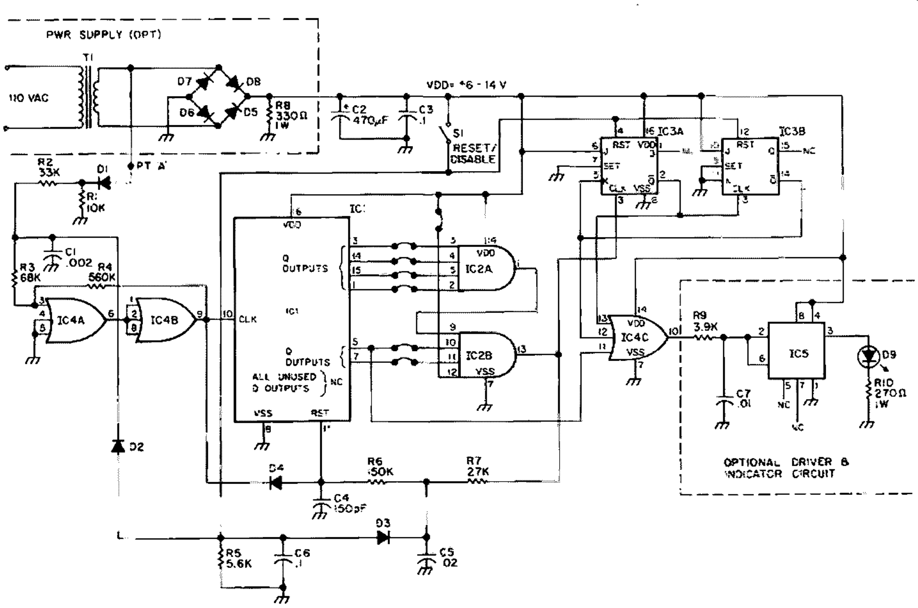

Fig. 1.

described will be 9 minutes, 50 seconds at 60 Hz line frequency. Circuit operation for other intervals is completely analogous. I'll say more on this later. IC1 counts the pulses at its input until output pins 3, 14, 15, 1, 5, and 7 are simultaneously high. This will first occur exactly 3 minutes, 16-2/3 seconds after the timer is activated, or after exactly one third of the required 9-minute, fifty-second timing period.

The high output of IC2B is fed to IC3A and to a circuit consisting of R7, R6, C5, C4, and D4, whose purpose is to reset IC1. It does so in the following manner: IC1 toggles on the negative-going edge of its clock input. Assume that the final 60 Hz pulse just before the completion of the 3-minute, 16-2/3-second interval is occurring. As the clock input at pin 10 of IC1 is going low, the inputs of IC2 go high. This causes the output of IC2B to go high. When this occurs, capacitor C5 begins to charge up through R7. Since the level at pin 10 of IC1 has gone low, however, reset pin 11 is also held low by D4 during this period, so the counter cannot yet reset. Finally, after C5 is fully charged, the input at pin 10 again goes high. This allows the voltage on C5 to be transferred through R6 to pin 11, thereby resetting the counter. When it does reset, pin 13 of IC2B is again driven low. C5 then discharges back through R7, thus completing the process and allowing the counter to count again. IC3 is a dual J-K flip-flop, connected to act as a divide-by-three counter. After 9 minutes, 50 seconds, when the above process has occurred three times, pin 2 of IC3A and pin 14 of IC3B will both be low. The highs on pins 12 and 13 of OR gate IC4C are thus removed, and it responds to the 1.875 Hz input present on pin 11. Therefore, after the preset time has elapsed, a 1.875 Hz square wave will be present at pin 10 of IC4C. This point can often be connected directly to the enable of the clock chip, since the current requirements of such are small, and R9, C7, IC5, and the indicator circuit are eliminated. IC5 is a 555 timer, used as a buffer-driver in this case to increase the drive capability of the preceding CMOS circuitry. Pin 3 can source or sink about 150 mA when the supply voltage is 10 volts. The output circuit consists of an LED indicator and current-limiting resistor, though many other possibilities exist, of course. R9 and C7 serve an unusual purpose. It was originally desired to drive pins 2 and 6 of IC5 directly from pin 10 of IC4C. The moderately fast rise time of the waveform at this point, however, tended to cause erratic operation of the 555. This is not surprising, since IC5 was designed for use as a timer, not as a buffer driver. R9 and C7 were then added to increase the rise time of the input at pins 2 and 6, after which no further problems were encountered.

All operating functions are controlled by switch S1. When the unit is not in use, S1 should be left closed. This applies a high through D3 and R6 to reset pin 11 of IC1, and a second directly to the reset terminals of IC3A and IC3B. A high level is also applied through D2 to the junction of R2 and R3. This disables the Schmitt trigger and holds output pin 9 of IC4B high. A high is required at this point during the reset process. Otherwise, diode D4 would clamp pin 11 of IC1 to ground and prevent the counter's resetting. The timing cycle is begun when S1 is opened, and the timer can be reset at any time by simply closing S1 and immediately opening it again.

As may be gathered, installation is normally not difficult. In general, you only need to connect the circuit across the clock-chip power supply, connect its output to the clock enable, and tie the

Time interval	Line frequency	Pins IC1 used
10 min., 0 sec.	60 Hz	1, 3, 4, 6, 13, 14, 15
9 min., 50 sec.	60 Hz	1, 3, 5, 7, 14, 15
5 min., 0 sec.	60 Hz	2, 4, 5, 6, 12, 14, 15
10 min., 0 sec.	50 Hz	3, 5, 12, 14, 15
9 min., 49.98 sec.	50 Hz	3, 4, 6, 7, 9, 14, 15
5 min., 0 sec.	50 Hz	2, 7, 12, 13, 14

Table 1.

60 Hz input to a suitable point. Still, in a few cases, this might not be feasible. Perhaps the correct supply voltage is not available, or maybe you desire to control a frequency display instead of a clock. In that case, you might build the circuit of Fig. 1 in its entirety, including both the optional power supply and IC5. It is normally no problem to replace the indicator circuit shown with a simple interface circuit suitable for the occasion. Often a single transistor will suffice. Regardless of the installation employed, however, you should take note of the following: When IC4 is a 4075 OR gate, as shown, output pin 10 will be high during the counting period (and when the timer is disabled) and alternate at its conclusion. The high level occurs because, at that time, there is also a high present at its input — either on pin 12, pin 13, or both. Since a high is required on the enable of most clock chips to activate the display, this means that it will be visible during the counting period and flash at its conclusion, as desired. Should it be observed in any installation that the display is being blanked during the counting period, the enable logic for that particular situation is reversed. In that case, you should replace IC4 with a 4025 NOR gate (a pin-for-pin replacement) to correct the difficulty. When IC5 is employed, it acts as a voltage inverter, so the above process would be reversed. In general, then, using one type of IC4 will cause the display (or other indicator) to be blanked during the counting period, while using the other will cause it to be visible. The choice will depend on the type of indicator circuit chosen, as well as the preference of the builder.

I stated at the beginning that this circuit is programmable. A brief explanation is now in order as to how this is accomplished. I will, therefore, demonstrate how the connections between IC1 and IC2 for the circuit previously described, i.e., the 9-minute, 50-second 60 Hz version, were determined. Those for other timing intervals can be obtained in a similar manner.

This circuit is basically a counter. Therefore, you must determine how many 60 Hz pulses will occur in a 9-minute, 50-second or 590-second period. 590 sec. x 60 pulses/sec. = 35,400 pulses. IC1 only counts up to one third of the required number before it is reset, however. It therefore resets after 35,400 ÷ 3 = 11,800 pulses. IC1 is a true binary counter, so the 11,800 figure must be converted to binary. It is equal to

Parts List

All resistors	½ Watt, 10% tol., except as noted
All capacitors	25 V or greater breakdown voltage
D1-D4	Silicon diode, 1N914 or equivalent
D5-D8	Silicon rectifier, 1 A at 50 V piv
D9	50 mA LED (Radio Shack 276-026 or equivalent)
IC1	4020 binary ripple counter
IC2	4082 dual 4-input AND gate
IC3	4027 dual J-K flip-flop
IC4	4075 triple 3-input OR gate, or 4025 triple 3-input NOR gate (see text)
IC5	555 timer
T1	110/9 V power transformer
S1	SPST switch

10111000011000. Now, starting at the right-hand side of the number, count left until the first "1" is found. It will be four digits from the right. The second will be five digits, the third ten digits, the others eleven, twelve, and fourteen digits. The corresponding Q outputs of IC1 must be tied to IC2. Thus, tying Q4, Q5, Q10, Q11, Q12, and Q14 to the various inputs of IC2 will produce a 9-minute, 50-second counting period. These outputs correspond to pins 7, 5, 14, 15, 1, and 3 of IC1. For this particular delay, I needed only six of the AND gate inputs. The unused input was tied to V_{dd}. From the above, it can be seen that many counting intervals are possible with this circuit, but not all. For example, if the binary number for a particular interval had ten "ones" in it, there would not be enough AND gate inputs to handle them. Nevertheless, a great many are possible. Even when exact intervals may not be had, they may generally be approximated very closely. Table 1 shows the connections for some of the more popular ones, each of which was determined by using the procedure above. All unused inputs of IC2 should be tied to V_{dd}. In one case, an exact interval could not be had, so the table shows that of the nearest approximation.

Lastly, remember that the above circuit consists primarily of CMOS ICs, which are much more easily damaged by improper handling and installation than TTL. I therefore heartily recommend that you review the operation of CMOS circuitry in general before building the circuit above — especially if you are considering adding it on to some existing circuit. It could, in the long run, save time and expense. ■

New Products

from page 37

Some of the PLL radios will include the M-20 Kit to get the radio out of 27 MHz.

The instructions are very simple to follow and are explained in a step-by-step procedure or installation of these kits can be performed at the factory for those desiring such a service. Write for specific prices and include the make and model number of the CB you wish to have converted. Contact *American Crystal Supply Co., PO Box 638, West Yarmouth MA 02673; (617)-771-4634.*

HAMTRONICS' NEW VHF EXCITERS AND POWER AMPLIFIERS

Hamtronics, Inc., has a new series of FM transmitters for the 6 meter, 2 meter, and 220-MHz amateur bands. The new model T50 exciter module is constructed on a 3" x 7½" PC board. It features 2 Watts rf output, good clear audio, built-in test points for easy alignment, and six channels. The price for this FM exciter kit is only $49.95.

As a companion for the new T50 exciter and Hamtronics' XV2 series of VHF SSB transmitting converters, a new line of VHF linear/class C power amplifiers has been released. The model LPA 2-15 features 15 W SSB or 20 W FM/CW output with 2 W drive. The model LPA 2-45 provides 45 W output. These PA units and others are available for 6 meters, 2 meters, and 220 MHz as semi-kits, with the critical parts of assembly already done. The prices of the linear power amplifiers start at $59.95.

A free catalog is available on these and other VHF and UHF kits, preamps, receiving converters, FM receivers, and transmitting converters. For more information, contact *Hamtronics, Inc., 182-F Belmont Rd., Rochester NY 14612; (716)-663-9254.*

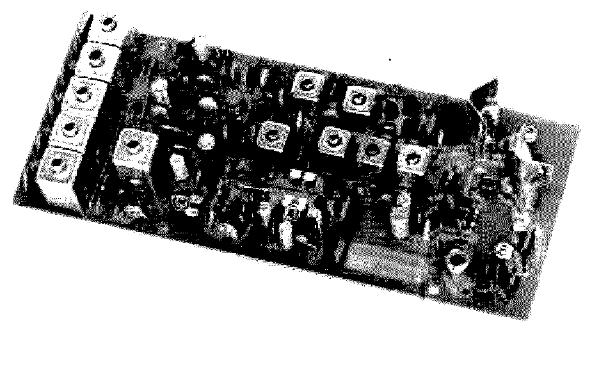

Hamtronics' 6 meter exciter.

PACE-TRAPS FLYING DUCKY

Two meter FM operators should find the new Pace-Traps Flying Ducky a handy and useful addition to their present setup. The Flying Ducky was designed to fill the performance gap experienced by most 2 meter mobile operators when using their HT in an automobile. Within the confines of the car body, the rubber ducky with which most HTs are equipped does only a marginal job at best. This generally limits communications to very nearby repeaters and mobile and fixed stations in the immediate vicinity.

The Pace-Traps Flying Ducky eliminates the handicap of operating from inside the car by providing the means for quickly and simply positioning and connecting an external antenna to the HT. The arrangement takes full advantage of the excellent ground plane provided by the vehicle's metal roof. No additional antenna is required as in the Pace-Traps system. The HT's rubber ducky itself becomes the outside radiator.

The device consists of the following: a chrome-plated magnetic mount which has a hold-down power of 50 pounds and which will stay securely in place at speeds well in excess of the 55 mph limit; a mount which is equipped with a connector that mates with that on the rubber ducky; a matched length of coax cable (105 inches) provided with a connector to fit the HT.

Installation takes ten or fifteen seconds. The rubber ducky antenna from the HT is inserted into the magnetic mount. The mount is placed in the center of the car roof and the cable is routed either through the door jamb or an open window. (The thick rubber weather stripping on most cars makes closing the door on the cable possible without damage.) Then connect the coax cable to the HT and you're all set.

Not the least advantage to using the Flying Ducky mount and your rubber ducky antenna as opposed to a fixed outside antenna is its low profile and the portability of the HT itself. When installed, it has a very low rip-off attraction and when removed, it has none!

While no lab-type test were performed, several on-the-air checks bore out the manufacturer's claims that the Flying Ducky's performance is better than a gutter-mounted quarter-wave and superior to a 5/8-wave mounted on the trunk deck.

The Flying Ducky ($13.95) can be used with your own antenna or with one of Pace-Traps' rubber duckys ($7.95). An accessory quarter-wave whip ($5.95) is also available. *Pace-Traps, Box 234, Middlebury CT 06762; (203)-758-9228.*

Morgan W. Godwin W4WFL
Peterborough NH

ALLIANCE INTRODUCES HD-73 HEAVY-DUTY ROTATOR

The HD-73 Heavy-Duty Rotator has been introduced by the Alliance Manufacturing Company.

Designed especially for the amateur who wishes to increase his capability with in-tower or mast-mounting option, the HD-73 features a unique dual-speed control with one five-position switch, providing a one minute-per-revolution speed for rotating over an extended arc, and slower speed control permitting fine adjustments.

The improved automatic brake action simplifies positioning and reduces risk of antenna damage by sudden stops.

Designed to operate antennas with a maximum of 10.7 square ft. of load capacity, mast-mounted, the HD-73 develops a wind-load bending moment of 10,000 in. lbs., capable of withstanding most

Continued on page 45

Another IC-22S Scheme

— *for oddball repeaters*

R. B. Palmer WA1ZMQ
Box 3141
Lynnwood WA 98036

Worried about handling those odd 2m splits that still exist around this country and in Canada? Does the fact that Podunk, California, where you plan to vacation, has a repeater with input on 146.085 MHz have you down? Icom has done a good job, but, alas, there are more than 22 repeater combinations, as any traveler can testify. Here is a simple solution to enable your Icom 22S to send and receive on *any* frequency within the allocated two meter band and to enable you to work those repeaters with odd splits — those other than the standard 600 kHz for which the Icom and most other transceivers are precalibrated.

The solution is very simple. It involves no electronic components, no tedious Boolean logic or complex switching arrangements, and no modification of the interior of your Icom 22S. Essentially, either of two preprogrammed eight-pole dip switches are selected by a toggle. The dip switches are programmed in a straightforward manner, according to the Icom instruction manual, which offers the diode combination for attaining a given frequency. Dip switches are recommended, for their small size makes them compact for mobile use and enhances the ease with which they may be covered after programming — thus keeping them dust-free and eliminating the possibility of accidentally rearranging the switch combination in the dark while groping for the toggle.

The other parts needed are an eight-pole, double-throw toggle switch (two 4-pole slide switches may be substituted, with the handles connected to facilitate operation) and a suitable 9-conductor, color-coded cable to run the diode leads from your Icom to the external switch box. Any small package, such as a jewel or ring box, which is durable enough for mobile use, makes a compact case for your Icom All Frequency Selector.

Position 22 on the selector of the Icom was chosen, as the leads can be taken off from this end position more easily, without crowding them down onto other permanently programmed diodes, and, also, this "end-of-the-dial" position is easy to remember. The hot (when switched to position 22) lead is taken from the solder blob of the wire coming up to position 22 of the programming board within the Icom. All eight diodes are soldered into their banded end positions; the other leads of the diodes are cut one third of an inch long and bent over at right angles to the vertical diodes. Color-coded cable leads are soldered to these latter diode leads and the corresponding leads at the other end of the cable are soldered to the pins (in some numerical order) on the accessory socket at the back of your Icom 22S. The same

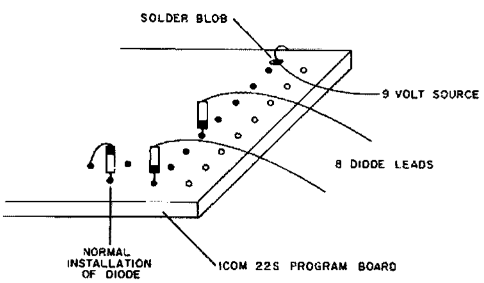

Fig. 1. All eight diodes are installed by the banded end in position 22. Eight wires lead from the diodes to the accessory socket. A ninth lead connects the 9 volt lead from the selector to the remaining position on the socket.

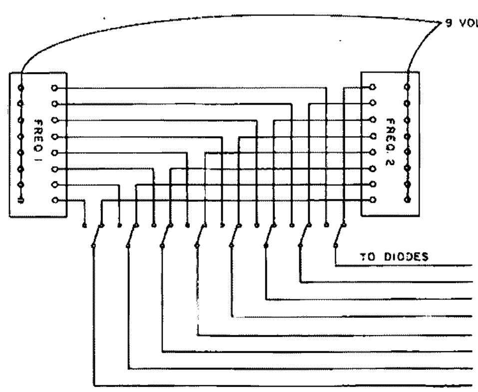

Fig. 2. Schematic for two dip switches and the 8-pole, double-throw toggle. A rotary switch or two 4-pole slide switches may be substituted for the toggle.

colored leads are soldered to the pins of the plug supplied with your Icom.

The umbilical cable, with the eight diode leads and the 9 volt hot lead, must enter the bottom of the back of the external switch box, and, from there, the leads are routed to the appropriate switch terminals or toggle terminals, accordingly. To facilitate simpler programming later on, it is advisable to position the switch banks to present a facade for the user of "down is off for all" and "up is on for all." In a field situation, with flashlight illumination and the random complexity of the Icom diode positioning instructions, it behooves the user to make his switching as visibly straightforward as possible. Similarly, wiring the leads to the switch terminals should follow the Icom frequency recipe; that is, viewed from the top by the user, the left-most switch should be connected to D7 inside your Icom 22S, the right-most to D0. Programming is then straightforward: Look up the frequency you want to use in the Icom list, turn off all switches, and turn on the switches for the proper diodes required by the Icom instructions.

Either switch bank may be used for transmit or receive by toggle selection. And so one switch bank may be set up for transmit for an odd split, the other set up for receive. Place your Icom in simplex mode (central position of right-hand toggle), throw your toggle to the "transmit" position, and transmit; let go of the mike button, throw your toggle to the "receive" position, and listen. That's all there is to it, and remember: Podunk, California, is no threat any more, nor are any of the other odd splits around the continent. ■

New Products

from page 42

prevailing wind conditions. Icing is overcome by a rotator torque of 400 in. lbs., made possible through the use of heavy steel, hardened pitch gear teeth. Consistent performance of the unit in all-weather conditions is enhanced with a lifetime, factory-installed lubricant that withstands temperature ranges of +120°F to −20°F.

Constructed of heavy-duty cast aluminum, and weighing only 9-1/8 lbs., with one set of brackets, the HD-73 rotator provides a vertical balanced weight capacity of 1,000 lbs., due to two full raceways of 100 3/8"-dia. hardened ball bearings. Unique support bracket design permits a centering procedure for in-tower application without shims or difficult trial-and-error adjustments. The base design permits easy four-bolt, in-tower mounting without spacers.

The HD-73's 20-volt ac, capacitor split-phase reversible motor and its transformer are protected by fuse and thermal protectors against shorts, possible connection error, or prolonged operation. No voltage on motor or leads exceeds U.L. safety limits.

The meter, a dc, taut band D'Arsonval, is calibrated in S-W-N-E-S as well as a degree-graduated scale for full 360° position recording. The voltage supply for meter indication is solid state and regulated in a range of 105 to 129 volts to assure accuracy regardless of wide line voltage or load variation. A rock-bar switch permits dual-speed rotor control with accuracy and ease.

Voltage input is 117 volts ac, 60 Hertz, ±12 volts; mast-mounting size range is 1-3/8" o.d. to 2-1/2" o.d.; cable is 6 conductor. Total shipping weight (rotator with 2 pair brackets and control) is 17 lbs. For further information, contact *The Alliance Manufacturing Company, Inc., Alliance OH 44601.*

CSC DM-3 DESIGN MATE® NULLING R/C BRIDGE IDENTIFIES JUNKBOX AND ANONYMOUS PART VALUES

Where unmarked, unreadable, or unknown component values are a problem, the Continental Specialties Corporation Model DM-3 Design Mate® provides an inexpensive solution. This compact R/C bridge with its solid-state null detector provides a level of performance beyond its $74.95 price. $74.95 price.

"Hi" and "Lo" LEDs lead quickly to an exact null with the unknown part in the bridge. Resistance is covered in 6 ranges, from 10 Ohms to 10 megohms; capacitance in 5 ranges from 10 pF to 1 uF; and the dial accuracy is better than 5%.

The DM-3 comes completely assembled, tested, and calibrated, with detailed instructions and special application notes. It weighs just 2 pounds and needs only 3 Watts at 117 V ac, 60 Hz. A 220 V ac 50/60 Hz model is available at a 10% additional cost.

The DM-3, other CSC Design Mate instruments, and other Continental Specialties Corporation products are available at leading electronics dealers and distributors, or direct from the factory.

For additional information, contact *Continental Specialties Corporation, 70 Fulton Terrace, New Haven CT 06509; (203)-624-3103.*

MOTOROLA ANNOUNCES LINEAR, WIDEBAND COMPLEMENTARY AUDIO DRIVER TRANSISTORS

A series of NPN/PNP audio power driver transistors in popular TO-220 packages from Motorola produces low distortion and good transient response because of current gain linearity specified and

Continued on page 47

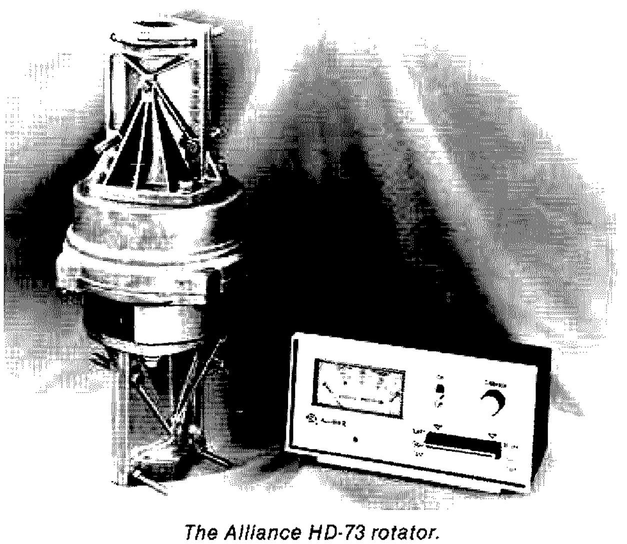

The Alliance HD-73 rotator.

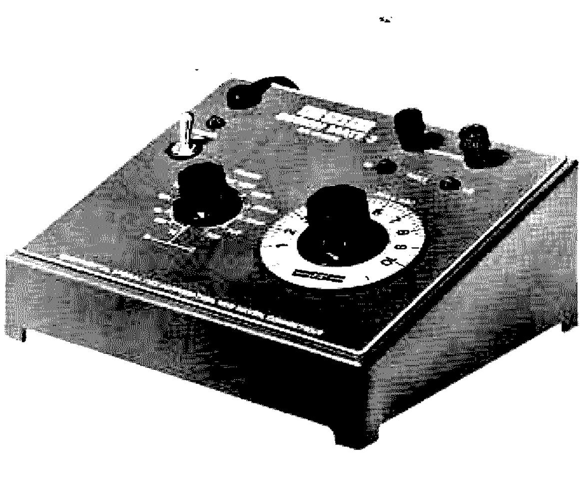

CSC's DM-3 Design Mate® R/C bridge.

Improving the SWTPC UDI

—*self-preservation made easy*

James R. Avoli K3MPJ
1261 Brinton Road
Pittsburgh PA 15221

The most flexible piece of test equipment that I have ever used is the Universal Digital Instrument from Southwest Technical Products Corporation.* This is a series of kits which are designed to work together to form a basic set of digital test instruments (including a counter and a DVM, among others) at a very reasonable cost. The basic concept and design make the system so very flexible in itself that it almost defies true design changes. But each individual accessory can be modified to suit its owner. Furthermore, SWPTC even gives enough detailed circuit description and theory of operation to allow you to design your own accessories. The system is not without its limitations, however, and I will take two of these to task in this article.

The basic unit is known as the UDI mainframe. It consists of a 1 MHz crystal-controlled timebase, digital logic circuits, a four-digit display, and an overflow indicator. All the other kits are accessories that plug into this mainframe (one at a time) via two sets of ten-pin connectors. The first and most important phase of improvement deals with one of the plug-in kits.

The Protection Racket

The FC-3 is the frequency counter accessory, rated at 20 MHz. Whether or not you consider four digits at that frequency adequate for your needs, the price is right. I only use it at lower frequencies, anyway. The counter's only other drawback is the ease with which the isolation FET (Q1) can be wiped out by too potent an input signal. The first couple of zaps only got me to be more careful about what level of signal I applied to the input. But that, as you already may have guessed, wasn't very reliable. So I made three modifications to this instrument to help protect it from me. Refer to the schematic diagram in Fig. 1 throughout the following description.

The first modification was to install a pair of crowbar diodes to shunt the disastrous portion of an overly potent input signal to ground when it exceeds the diode's threshold voltage. In this circuit, the location of these diodes right at the gate of Q1 won't load down the circuit under test. However, the diodes must be very fast-switching devices if they are to conduct before the input signal can destroy the FET. I used 1N914s (GE-300) with success here.

The second modification was to change the value of R1 to limit the flow of input current. The value was changed from 100 Ohms to 600 Ohms, so the current flow would be restricted but the sensitivity wouldn't be affected too drastically. In actual practice, this value has met with success in relation to the added diodes.

The third modification was to install a transistor socket so that I could replace the FET more easily if these protective enhancements didn't work well enough to overcome my own faux pas! I used a junk box variety with success here, but remember that I'm not concerned with its performance at 20 MHz.

So far, I haven't had to

*The UDI is no longer being produced, but we offer this article as a thought stimulus to those who already have or may wish to acquire this rather different piece of equipment. The original price of the mainframe was $59.95. —Ed.

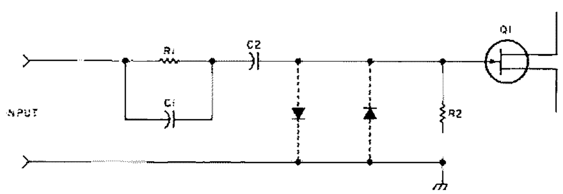

Fig. 1.

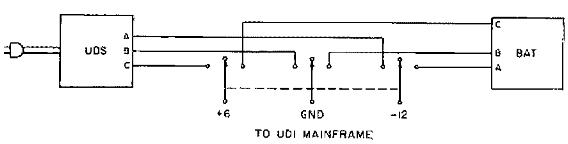

Fig. 2.

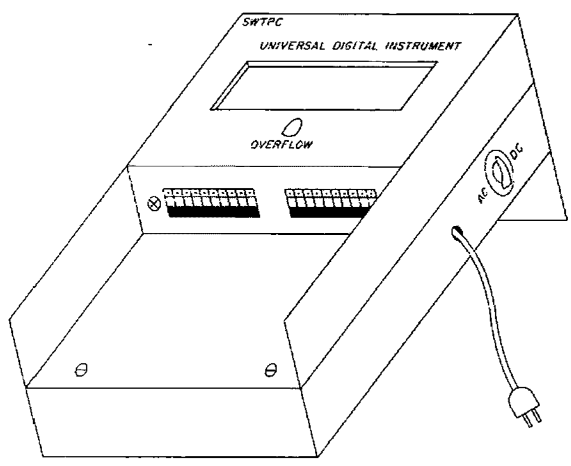

Fig. 3.

replace either the diodes or the FET. Incidentally, Radio Shack's #276-2035 (2N3819) N-channel FET does the job as a 99¢ replacement for the specified TIS-58.

Assault On the Battery

The second phase of improving the overall system was to alter the power source. Since I am more interested in versatility and ease of access for tuning and maintenance than I am in compact design, I undertook the next logical step. I acquired and built the UDS line supply kit, and then removed the batteries that are jammed into the mainframe. I combined the two power sources in a common chassis, along with a 3PDT selector switch, as shown in Fig. 2. You may even want to switch the ac line, thus requiring a 4PDT switch.

This second chassis, identical to the mainframe chassis, was then piggybacked, back to back, onto the mainframe. The back piece was then fabricated to double as both the rear cover and as a convenient tilt stand. See Fig. 3 for the mechanical denouement of this project. I have purposely used a sketch instead of a photograph for the following reasons:

1. The angle of slope is really up to you; design it to suit your own needs.
2. Alternate construction methods are to use a triangular rear cover or to build a separate sloped stand.
3. Even after all these years, the mechanical quality of my constructions has never been able to equal the electronic quality of my constructions!

Conclusion

As with any commercially-available product, there are always going to be ways to change (improve?) the original. I urge you to look into this flexible system of test equipment. Because of its cost and flexibility, you will find that it can open up a new horizon for you. ■

New Products

from page 45

matched between complementary pairs, and a 30-MHz current gain-bandwidth product. The series replaces popular types FT317 and FT417 with better peformance.

The 8-Ampere devices, available In 120-volt and 150-volt versions, exhibit gain linearity deviating only by a factor of 2:1 over a 0.1- to 3.0-A collector current range, with PNP/NPN linearity matched within a 3:1 ratio. Combined with wide bandwidth, these open-loop characteristics make excellent performance possible under closed-loop feedback conditions.

Capable of 50-Watt dissipation, the TO-220 plastic devices are available from stock at the prices shown in Table 1.

For further information, contact *Motorola Semiconductor Products, Inc., PO Box 20912, Phoenix AZ 85036; (602)-244-6900.*

Type	Polarity	$V_{ceo(sus)}$	Price (100-up)
MJE15028	NPN	120 V	$1.22
MJE15029	PNP	120 V	$1.22
MJE15030	NPN	150 V	$1.40
MJE15031	PNP	150 V	$1.40

Table 1.

NEW REALISTIC SOUND LEVEL METER

Noise may be a minor irritant, a definite disturbance, or even a threat to your hearing, depending on the level and duration, according to Radio Shack.

The new Realistic Sound Level Meter from Radio Shack may be used for measuring sound intensity in homes, schools, offices, or other environments for compliance with noise standards established by federal, state, and local agencies. It can also be used to check the acoustics of studios, auditoriums, and home hi-fi installations.

The hand-size meter features a weighting selector for measuring either wideband sound level ("C" weighting), or the 500- to 10,000-Hz range ("A" weighting), which is the area of greatest sensitivity to the human ear.

A range switch selects six sound-level ranges, each spanning 16 dB, for an overall range of 60 to 126 dB and includes a position for checking battery condition. The meter also has a slow/fast response switch for checking average or peak noise levels.

Other features include the large, easy-to-read calibrated meter and tripod adapter that allows the sound level meter to be mounted on a camera tripod (¼" thread) to eliminate hand noise and minimize the effects of sound reflected from your body.

A phono-type output jack permits use of the sound level meter as a high-quality, dual-response microphone, or for connection to high-impedance headphones, an oscilloscope, frequency analyzer, or other test equipment.

Accuracy of the Realistic Sound Level Meter is said to be ±2 dB at 114 dB sound level, and measurements are referenced to a 0.0002 ubar standard. Distortion is given as less than 2% at 1 kHz, 0.5 volt.

The meter is 6-1/4" x 2-7/16" x 1-3/4" (160 x 62 x 44 mm) and

Continued on page 49

Motorola's audio driver transistors.

Realistic Sound Level Meter.

Gary L. Edgington WB6EKO
12251 Buckskin Tr.
Poway CA 92064

Graduate to a Better Operating Desk

—*lots of class*

A couple of months ago, I came home from a long day of work all set to relax out in the shack and work a few guys on my trusty old Swan. After a brisk hello and good-bye to the XYL, I headed straight to my desk, sat down, moved a few things here and there to get at the key, turned on the rig, and sat back to let it warm up a little.

It took a second or two for it to sink in that I'd actually had to move things around in order to get enough operating space to do what I like best, which is working DX via CW. So, after a couple attempts to get through the worst QRM I'd seen in quite awhile, I started sketching out a desk design to suit my needs.

I like something flashy, yet simple and inexpensive and unique and functional at the same time. After getting a rough copy on paper, I thought others might like the design as well. This draft is not meant for minimum cost nor is the emphasis on shooting the moon; it's more a middle-of-the-road design. With a little research and imagination, you can add or delete as you see fit.

First, you'll notice that the desk is divided into two sections. Unless you're planning to make this a permanent fixture, don't try to move a 4'3" desk through a 28" door. It's been known to be downright difficult.

The lower section of the desk is very simple. I'm using 1" x 2" x 12' pieces of pine, as in Fig. 1(a), cutting and staggering these pieces. This, incidentally, makes a very handsome finish for this desk. I recommend nailing and gluing these strips together, except for those pieces used for the facing.

The sides can be made the same way, or you can use 3/4" (fine-grade) plywood. The backing, C in Fig. 2, is of 3/8" (shop-grade) plywood with the knots reversed to the back. Frame the backing with 1" x 2" pine for rigid support of the desk top.

All doors and drawers are made of 3/8" (fine-grade) plywood. There are too many ways to describe the construction of drawer slides, so I'll leave this to your own ingenuity.

The top section, made much the same way as the lower, is purposely made separately. Again, unless the entire desk is made as a

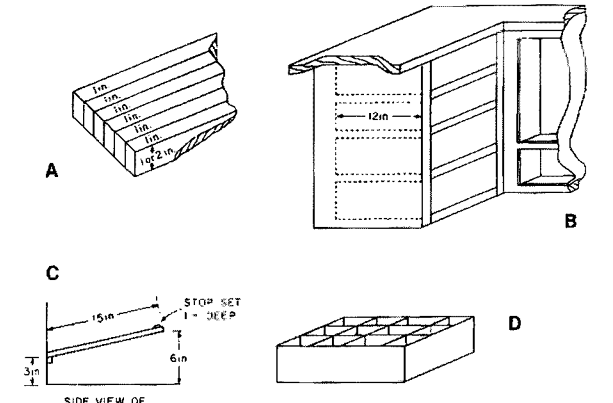

Fig. 1.

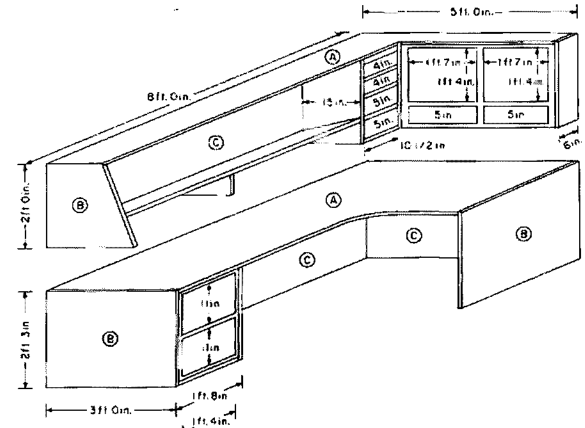

Fig. 2.

permanent structure, follow the drawings. Once set on top of the desk, it can be anchored by any of several different ways. The main idea is to be able to take it apart when you're ready to move.

In Fig. 1(b), I've left 3 inches of space for coax and electrical wiring. In Fig. 1(c), an old idea of slanting the radio shelf was incorporated into the desk for easier readability of dials and meters. Beneath this shelf is ample space for storing keys, logs, paper, pencils, and, in some cases, swr meters, all within reach of the operator but out of the way.

Box dividers, such as in Fig. 1(d), if made 2¼" to 2½" high, can be placed one on top of the other inside a couple of drawers for storage of small items. The cabinet space was purposely made narrow to maximize desk work space, but it is still ample for storage of hand tools either by hanging or laying them in the shelf space.

A folding bench can be added to the desk top next to the cabinet end by using a sturdy piano hinge and folding legs to save on space when it's not in use.

Finishing can be done in any of a number of ways. If you wish to use an enamel paint, you won't have to make such an elaborate desk top. If you wish to use a stain, I definitely recommend using spare pieces of the same wood to test for desired results. I'm using Varathane liquid plastic for a durable finish.

I've almost finished my desk and certainly hope you enjoy your desk as much as I intend to enjoy mine. Take your time, and best of luck to you. ■

New Products

from page 47

weighs 7-3/4 ounces (220 grams). It operates on a standard, self-contained 9-volt battery.

The Realistic Sound Level Meter is priced at $39.95. Available exclusively from Radio Shack stores and dealers, nationwide.

Radio Shack, 1400 One Tandy Center, Fort Worth TX 76102; (817)-390-3272.

RUGGED TV VIDEO OUTPUT TRANSISTORS IN INEXPENSIVE DUOWATT PACKAGE

Motorola's new MDS20 and MDS21 high voltage power transistors combine a high 60-MHz current gain-bandwidth product with the ability to withstand cathode ray tube arcing currents in the economical, 2-Watt free-air dissipation Duowatt package.

The MDS20 ($0.50, 100-up) is rated at a c-e breakdown voltage of 250 volts, while the MDS21 ($0.55, 100-up) achieves the 300-volt breakdown needed for higher-powered color TV designs. Saturation voltage is better than 0.6 V at 30-mA collector current. The gain is specified at a minimum 40 at 30 mA, with linearity from 1 mA to 40 mA. The low collector-base capacitance (3.0 pF max) eases video and chroma output design problems, while small drive requirements allow the transistor to be directly driven by many types of IC chroma demodulators.

Used as a color difference output, where drive and bandwidth requirements are less severe, the MDS20 and MDS21 can safely be operated without any heat radiator to ambient temperatures of 112°C. The plastic Duowatt package provides a metal tab for those applications where heat sinks are required. For further information, contact *Motorola Semiconductor Products, Inc., PO Box 20912, Phoenix AZ 85036; (602)-244-6900.*

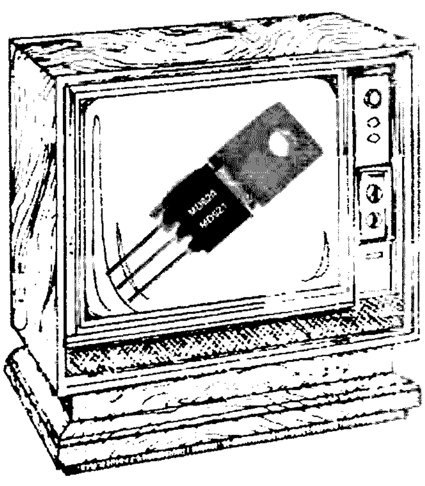

Motorola TV video output transistor.

CSC INTRODUCES 500-MHZ PRESCALER FOR $59.95; EXPANDS COUNTER RANGE TEN TIMES

Continental Specialties Corporation introduces their 500-MHz Prescaler which is capable of extending the performance of almost any frequency counter ten times, up to at least 500 MHz.

It features a BNC input connector, diode protected 50-Ohm input, and 250-mV sensitivity from 50 to 500 MHz. Its output is a minimum 400 mV (peak-to-peak) capacitively coupled signal, available at a phono jack connector. Direct or ÷10 prescale outputs are switch-selectable.

Power is supplied to the unit through a coaxial dc-type power connector. Power requirements are 7-12 V dc at 100 mA maximum. An on-board voltage regulator assures trouble-free operation even from troublesome power sources.

The entire PS-500 package is 1" x 2" x 3½". Suggested price in unit quantities is $59.95. Available accessories include 110 and 200 V ac power supplies—each $9.95; a power connector-to-alligator clip cable at $2.95; a cigarette lighter power cord at $3.95; a 3-foot BNC-to-BNC input cable at $5.95; and a 3-foot phono plug-to-phono plug output cable at $3.95.

The PS-500 interfaces directly with CSC's MAX-100 MHz frequency counter ($134.95), and their new Mini-Max 50-MHz hand-held frequency counter ($89.95) to extend the counting range of either counter. In addition, it can be used with almost every counter available.

The high-speed performance of the PS-500 is specified and guaranteed to 500 MHz. Typically, the ECL-III logic used in its design is capable of reliable performance up to about 600 MHz. This 500-600-MHz performance, in combination with its low price, suggests the PS-500 for a number of VHF applications, including radio common carrier, aviation radio, amateur radio, business radio, government and public service radio, telephone, marine radio, television, navigation, radar, and other communications applications;

Continued on page 60

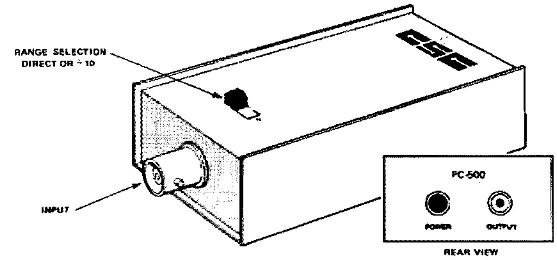

CSC's 500-MHz prescaler.

The SWL Bible

—tuning the ends of the world

Most larger stations will put you on their mailing lists for programming schedules and other literature. To stay on, you have to show them you are still alive with an occasional reception report or letter indicating an interest in receiving the mailings.

Thomas R. Sundstrom W2XQ
Box 205
Willingboro NJ 08046

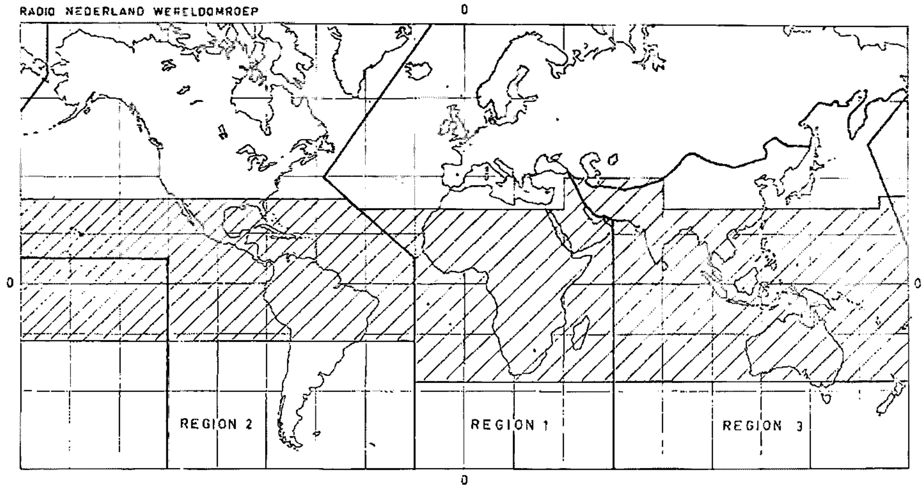

Fig. 1. This map depicts regions I, II, and III as established by the ITU. The crosshatched center section shows the area of the world in the tropical broadcasting zone. The map is from the "Radio Spectrum Course" offered by Radio Nederland, Hilversum, Holland; enrollment in the course is free for the asking.

A wide range of programming, from pure propaganda to strictly local business, can be found on the air. The international bands above 6 MHz are populated with high-powered (100 kW or more) "voices" of governments disseminating news and commentary cast in the mold of the democratic western world or of the communist bloc or somewhere in between. Stories broadcast by the United States Information Agency's Voice of America, Radio Moscow, and the neutral Swiss Broadcasting Corporation take on remarkably different flavors even though the same incident is the particular item under comment. Interesting opposing versions of events in the Middle East are offered regularly by the Israel Broadcasting Authority and Radio Cairo.

The large stations also broadcast other kinds of programs. The British Broadcasting Corporation offers a host of dramas, game shows, and sporting events. One of the most popular programs on the air is the Music USA and Jazz Hour aired by the Voice of America, Washington. And guess what—no commercials!

In addition to government-sponsored stations, there are a number of religious stations on from such countries as the Philippines, Ecuador, Liberia, and Ethiopia. Of all such outlets, HCJB in Quito, Ecuador, is probably the largest and best known, programming in a variety of languages to all areas of the world.

International broadcasts are in all languages, but the bulk of them directed to North America are in English. Broadcasts are directed to all continents, even Antarctica, by governments on all continents—with the notable exception of South America, which has been the slowest to get into the fracas.

A third type of broadcast consists of the regional and local ones found in the tropical bands below 6 MHz. These frequencies are called the tropical bands because the bulk of the stations using them to penetrate the back country, out of the range of conventional medium-wave (standard AM broadcast) stations, are located between the Tropic of Cancer and the Tropic of Capricorn.

The regional broadcasts are quite interesting because programming is untainted by international politics, but most of these low-powered outlets are not in English. Particularly in Latin America, many of these stations are privately owned and relay MW outlets. Many of the African tropical voices provide interesting DX challenges for North America-based listeners. Conveniently, the best opportunity for hunting the Africans is just before the dinner hour and just after the late television news.

I'm getting ahead of myself. To have an understanding of SWBC listening, there is a universal "language" that has to be learned. It's not complicated, but it is necessary. So let's look at some terminology, get an idea of what can be heard, and conclude with some information on publications and equipment.

Frequency Factors

If you have a ham license and are active on the low bands, you are already aware that frequencies can be expressed in terms of meters (m), kilohertz (kHz), or megahertz (MHz).

Most "voices" nowadays have updated their announcements and use kHz, but watch out for the eastern Europeans. Most of these government-controlled stations still announce frequencies in meters, expressed to two decimal places.

You'll have to do the conversion:

$$m = \frac{300{,}000}{kHz}$$

or

$$kHz = \frac{300{,}000}{m}$$

Rounding errors will occur when calculating the exact frequency, but you'll be within 5 kHz of the actual frequency.

Let's Get High

The high frequency region, above the standard AM broadcast band and below the public safety bands used by police and firemen, is transitory in nature, exhibiting all modes of propagation at one time or another; this is the area with which I will be concerned in this article.

High frequencies (HF) are the only consistent frequencies to "bounce" off the various layers in the ionosphere with any degree of predictability, and the competition for space is fierce.

Fixed (point-to-point utility) services, both government and private common-carrier, occupy over 10 MHz, and mobile services (aeronautical and marine) take up another 5 MHz. Broadcasters and amateurs are low on the list, with 3 or 4 MHz each.

As the underdeveloped countries, especially in

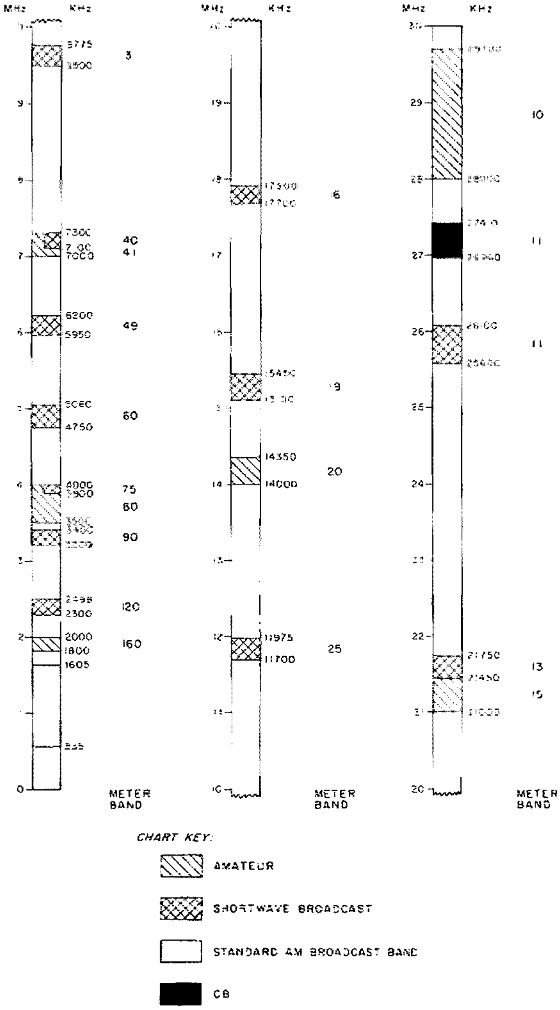

Table 1. A simplified radio spectrum shows the placement of the shortwave broadcast bands, the radio amateur bands, the CB band, and the domestic AM broadcast band tuned by most general-coverage receivers. The blank spaces are occupied by fixed (utility) and mobile (aero and marine) stations, for the most part.

South America and Africa, expand their economic muscle, their collective impact and need to be heard will put an even greater demand upon the available frequency space. Back in 1934, when the present International Radio Regulations were adopted by the International Telecommunications Union, things were quite different, and such pressures did not exist. Table 1 depicts the HF spectrum with frequency allocations for today.

Time Constants

Broadcasting schedules are referenced to the standard Greenwich Mean Time. GMT or Universal Time (UT), which is the same thing for our purposes, is expressed as a 4-digit number in a 24-hour clock. Don't forget to adjust day and date when converting.

If you are active on the low bands, you are already probably keeping your log in GMT. If you are a newly-licensed Novice or active only on VHF, just tune to WWV on 2.5, 5, 10, or 15 MHz and you'll hear the time given in GMT each minute.

The reason, incidentally, that international broadcasters use the 24-hour GMT clock is that it would be virtually impossible for them to keep up with the ever-changing Daylight-to-Standard-and-back conversions that take place worldwide. Recent changes in past years just here in the US exemplify the problem.

Broadcasting Schedules

Broadcasters are alert to ever-changing propagation conditions. The maximum usable frequency (MUF), above which signals will not be reflected by the ionosphere, and the optimum traffic frequency (having ionospheric support 90% or more of the time), which is lower than the MUF, are affected by three cycles: a daily, a seasonal, and an 11-year cycle.

Short-run variations, caused by solar storms, resulting in radio blackouts and stupendous displays of the northern and southern lights, only add spice to the everyday life of the broadcaster.

Most broadcasters will change transmitting frequencies quarterly to compensate for the fairly predictable seasonal changes.

International frequency coordination has been carried on, since 1960, by the International Frequency Registration Board (IFRB) of the International Telecommunications Union (ITU) in Geneva, Switzerland. Broadcasters must submit quarterly schedules in advance of their intended use. The four periods are the March schedule (March and April), the May schedule (May through August), the September schedule (September and October), and the November schedule (November through February). Each schedule starts on the first Sunday of the month. The proposed schedules are required by the IFRB five months before the expected implementation date.

The IFRB assembles all the submitted information into a tentative schedule and distributes it to ITU members about two months prior to implementation date. The IFRB points out problems and suggests alternatives to resolve on-the-air conflicts, and there is time to make adjustments and negotiate terms if the problem is unusually difficult.

At the conclusion of the period, a final HF master schedule is compiled showing which frequencies worked and which did not. The broadcasters can use this hindsight to prepare future proposed schedules. Any time a frequency, either during the proposal period or on the air, is changed, the broadcaster must inform the IFRB.

The work of the IFRB has reduced the number of on-air conflicts, but they're not able to address out-of-band operation.

It should be noted that the frequency allocations in Table 1 are those established by the various conferences, but that a number of countries do not follow the ITU regulations and will slide up or down a bit as they did to escape the interference that was especially bad during the bottom of cycle 20-to-21. The communist bloc countries are noted for sitting on or outside the band edges.

The Broadcast Bands

The various bands have unique personalities and can offer different DXing challenges, so let's look at what the ITU is dealing with.

120m (2300-2498 kHz)

This tropical broadcast band is dominated by low-

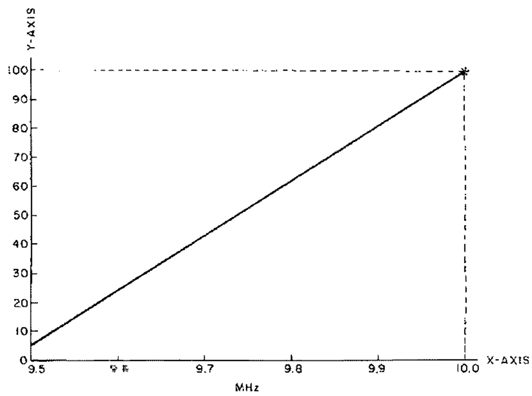

Fig. 2. Band calibration charts can be prepared for each frequency range you want to tune. A calibrator is a useful tool in making accurate graphs. A graph for 31 meters should look something like this.

powered stations in Latin America and Indonesia, with a few Africans thrown in for good measure. On the west coast, Indonesians can be heard before dawn, but, elsewhere, you can hear Guatemalan outlets on 2360 and 2390 or Brazil on 2470 and 2450 kHz. On the east coast at sunset, listeners may log the most powerful station on this band—the 20 kW Rhodesian outlet on 2425 kHz, scheduled 0355-0445 GMT.

90m (3200-3400 kHz)

Another tropical band, used for low-powered relays of medium-wave stations but intended for an audience in the hilly country of Latin America or the bush country of Africa, this band is dominated by stations in some pretty rare countries. The beginning DXer will first note the powerful voice of the 24-hour South African Broadcasting Corporation, the domestic voice, on 3250 kHz. Sunset would be the best time to hear other Africans, such as Swaziland on 3223, Liberia on 3255, Rhodesia on 3306, and Sierra Leone on 3316 kHz. After the Africans sign off, stations from Guatemala, Brazil, and Venezuela populate the airwaves; a popular station is the English-speaking Belize on 3285 kHz. On the west coast, Indonesians, Chinese, and Indians can be heard before dawn.

75m (3900-4000 kHz)

This band is classified as an international band in regions I and III, with region I restricted to just the top 50 kHz. Region II amateurs, who share the frequencies, complain bitterly, but there is no foreseeable change except, perhaps, a lessening of the interference as we get into cycle 21 and broadcasters move to the optimum traffic frequency that should get up to 25 or 19 meters at night. Now, Radio RSA, South Africa, and Deutsche Welle, German Federal Republic, share 3995 kHz. Other easy-to-hear stations are the Swiss Broadcasting Corporation on 3985, the British Broadcasting Corporation on 3975 and 3952, and the South African Broadcasting Corporation outlets on 3980 and 3965 kHz. The low-powered Far Eastern outlets between 3900 and 3950 kHz can be heard before dawn on the west coast, when interference from east coast stateside amateurs is the lowest. One of the most interesting challenges now on 75m is Radio Afghanistan, heard around 0200 GMT on 3999.8 kHz.

60m (4750-5060 kHz)

WWV and other time and standard frequency stations mark this band by occupying the exact frequency of 5 MHz. This band is probably the most productive tropical band for the experienced DXer. On the east coast, Africans fade in an hour or two before sunset, and countries such as Benin on 4870, Guinea on 4910, Ivory Coast on 4940, Cameroon on 4972, the Central African Republic on 5039, and Togo on 5047 can be heard. Colombians and Venezuelans dominate the band after the Africans sign off, but, by 0400 or 0500 GMT, most of these powerhouses have also gone off the air, leaving clear frequencies for the low-powered outlets in Peru and Ecuador. Africans can be heard once again signing on after midnight, before dawn on the continent. Around 1100 or 1200 GMT, DXers have a chance to log such things as Burma on 4725 or Indonesia on 4767, providing that solar conditions are "quiet" enough to permit a transpolar path. Of all the outlets in Oceania, the easiest to hear is Port Moresby in English on 4760 kHz, whose signal peaks about an hour before local sunrise on the east coast. And let's not forget a country most hams would love to work—Galapagos Islands, on 4810 kHz, which has been widely heard lately up to 0400 GMT following the sign-off of the Venezuelan that controls the frequency during the early evening.

49m (5950-6200 kHz)

This is the lowest international band used in all three regions, but, among the superpowers, there are still elements of a tropical band within. In the middle of the day, low-powered Canadians (relaying AM outlets) can be heard on 6005, 6010, 6070, and 6130 kHz and, in the Gulf states and the southwest, some Mexican and other Central American stations may be heard. By late afternoon and into the late evening, however, Europeans and Africans totally dominate almost every frequency. Not until sunrise in Europe does the congestion begin to ease, and some low-power Latins can be heard prior to dawn stateside. Australian outlets on 6140 and 6150 kHz are best heard around 1000 to 1200 GMT.

41m (7100-7300 kHz)

This band is assigned to broadcasters based in regions I and III only, and international broadcasters are not supposed to beam programs to the western hemisphere. Unfortunately, many do, and the entourage is led by Radio Moscow, with as many as six frequencies in parallel operation. Unfortunately, the Novice, restricted to 7100-7150 kHz, has to bear the brunt of the interference with Moscow on 7105 and the Tirana relay of Radio Peking on 7120 kHz leading the way. Out-of-band operation is notable here, especially with multi-language programming of Tirana on 7065, heard as early as 1900 GMT, and the British Broadcasting Corporation during the late afternoon on 7075 kHz. One of the more interesting stations noted on 41m is Radio Pakistan on 7095 kHz, noted with good signals on an English language transmission to Europe at 2100-2145 GMT. West coast DXers will also hear the Asiatic Russians, Chinese, and Manilans on 7225 kHz before dawn around 1000-1100 GMT.

31m (9500-9775 kHz)

This is the first of the in-

Colorful verification cards can be obtained from most of the shortwave broadcasting stations. Note the self-prepared card in the lower right-hand corner. That was for a reception report of Radio Swan on 6000 kHz in 1960, a front for the CIA operation on Swan Island prior to the Bay of Pigs fiasco.

ternational bands that has something audible on it 24 hours a day. At sunrise, Chinese and Australian broadcasters dominate (look for Radio Australia 1100-1300 GMT on 9580 kHz), but, by late morning, high noise levels preclude hearing most signals excepting those from Cuba, Haiti (on 9770 kHz), and HCJB in Ecuador. Europeans and Africans fade in by midafternoon and peak during the dinner hour on the east coast. Tuning signals, which are characteristic melodies unique to each broadcaster and precede the opening of transmission, can be heard every half-hour. By midnight, all that will be left are some of the western hemisphere broadcasters, except, if conditions are right, VLW9, Perth, may be logged on 9610 kHz in a transmission beamed to the South Pacific. On the west coast, the regional and general service broadcasts from Japan and China can also be heard.

25m (11700-11975 kHz)

This is another mainstay, with the band center loaded with the European and African powers. Morning openings to the Far East and Oceania will usually turn up numerous Soviet and Chinese regional services found above and below the nominal band edges. Now, the afternoon and early evenings are best for Europe and Africa, but, with the move into cycle 21, this band should remain open later and later into the night. After 0300 or 0400, look for the south sea music of Tahiti in French on 11825 kHz and for New Zealand on 11705 kHz. The relatively low-power Brazilians populate this band and can be heard best after 0000 GMT on 11785, 11805, 11865, and 11915 kHz, as well as elsewhere.

19m (15100-15400 kHz)

During the summer, this band can stay open all day, with Europeans in the morning and Asia/Oceania in the late evening into the night. Tahiti's second outlet on 15170 often is better than the parallel outlet on 11825 kHz. Peking can be found on 15030, 15045, 15060, 15070, and 15080 kHz, and, usually 15060 or 15080 kHz has an English-to-North America beam repeating each hour for four or five hours commencing at 0000 or 0100 GMT. Japan beams English to North America's east coast at 2345-0045 GMT on 15270, 15300, or 15445 kHz. During the middle of the day, as a contrast, only the major countries are heard, with Cuba and HCJB, Ecuador, predominant.

16m (17700-17900 kHz)

This band, at the minimum between sunspot cycles 20 and 21, was very uninteresting, but is now open into the late evening. Europeans and Africans (notably Cairo) can be heard in the late morning. HCJB's programming to Europe can be heard during the afternoon. Radio Australia's North America beam at 0100-0300 GMT on 17795 kHz and Japan (17825, 2345-0045 GMT) are audible during the evening.

13m (21450-21750 kHz)

Another daytime band with only the superpowers such as the British Broadcasting Corporation, Radio Cairo, and the Voice of America, this makes for another dull band from a DXer's point of view. This band should become quite active as cycle 21 peaks around 1980-81, as forecasts indicate the adjacent 15 meter amateur band will be the mainstay for DXers.

11m (25600-26100 kHz)

Until late 1977, this band was just plain dead, but cycle 21 should bring it to life as a daytime-only proposition. One of the first occupants was the Israel Broadcasting Authority, running 1400-1630 on 25605 kHz in Russian, Yiddish, and Georgian. Due to the seasonal variations of the MUF, 11m will be best during the summer months.

Information Sources

There are more than 20 nonprofit clubs in North America publishing monthly bulletins packed with information on members' loggings of up-to-date frequency and time changes, new "voices" on the air, and tips on improving your DX listening post. Some clubs specialize in a particular aspect of DXing, whereas others cover a broad range of interests.

Most clubs are members of the Association of North American Radio Clubs (ANARC). In addition to being a unified voice for publicity of the hobby, ANARC has a number of committees: frequency recommendation (to advise on clear frequencies for North America-beamed broadcasts); technical (to encourage receiver manu-

facturers to install SWL-oriented features); and a representative to the FCC Broadcasting Service Working Group working on the WARC 1979 proposals.

ANARC offers a current list of all ANARC members, free upon receipt of a no. 10 self-addressed stamped envelope with 28¢ postage affixed. The data sheets detail the main interests and publications of each club, the cost of membership, and a sample bulletin. When you write ANARC, 557 North Madison Ave., Pasadena CA 91101, requesting the list and enclosing the SASE, tell them *73* sent you.

Whereas a club bulletin is essential for current information on changing broadcasting schedules, other, more static, information must be obtained elsewhere. One such source is the annual *World Radio TV Handbook* available through Gilfer Associates, Box 239, Park Ridge NJ 07656. All kinds of data—addresses, personnel, master schedules, tuning signals, and more—are included. As the *Callbook* is the authority for radio amateurs, so is the *WRTH* the book for shortwave broadcast listening.

Another source of DX tips is through the "DX shows" aired by a number of different broadcasters. The *WRTH* has a master list of those, and the club bulletins keep you up to date on changes in the airing of them. There are some excellent "DX shows" produced by Radio Australia, Radio RSA (South Africa), Radio Sweden, and Radio Nederland.

Reception Reports and Verifications

Just as the radio amateurs on the HF bands exchange QSL cards to "prove" or "confirm" a QSO, so do SWLs write reception reports to broadcasters to elicit a verification card.

The data in the ham QSL and SWL report is much the same—date, time in GMT, and frequency—but the SWL report has an added description of the program content which should normally be 30 minutes long as a minimum. In addition, a few sentences on signal quality and interference are in order, unlike the RST format used by hams.

If the report can be verified against the program logs, the writer can usually expect a verification card in the return mail. A few stations still send letters, and a few others—notably Canada—no longer send QSLs.

Some stations depend upon a technical monitoring staff, which is derived from those listeners' reports showing the most value and a consistency in reporting. Radio RSA and Radio Japan are two such examples, each maintaining a network of monitors to whom they provide advance news on schedule changes, special newsletters with some "inside" information, and reimbursement for postage.

By the way, unlike the radio amateurs' QSL bureaus, SWLs have no such clearinghouse and reports must be sent directly to the stations. Return postage is often not required by the larger governmental outlets, but the smaller stations do require International Reply Coupons or mint stamps. When in doubt, always send return postage of some sort.

Accessories

If you have one of the new digital readout receivers or something like the very popular Drake SPR-4 receiver, you may not be interested in adding anything to your shack. However, if you are using one of the older receivers—Hammarlund, Hallicrafters, and National used to dominate the market in the 1940s, 1950s, and 1960s—there are a number of devices to facilitate DXing.

A must is to be able to tell what frequency you are tuned to. The add-on 100 kHz calibrator is almost passé now, as there are a number of manufacturers marketing calibrators that put out markers down to every 5 kHz for less than $40.

A calibrator is used to set up a reference marker on a 0-100 bandspread dial where, for example, 10 MHz is set to equal 100. On a sheet of graph paper, mark the x-axis with the frequencies of 9.5, 9.6, 9.7, 9.8, 9.9, and 10 MHz. Mark the y-axis with 0, 10, 20 . . . 90, 100. The calibrator will give precise markers at, say, 25 kHz as the bandspread dial is turned from 100 to 0. Plot the points and connect them for a visual graph of the 31 meter band. See Fig. 2.

When tuning the band in the future, just set the top end to have 10 MHz coincide with the bandspread dial at 100. The graph will get you into the ball park and the 5 kHz markers will enable you to fine tune any frequency by counting markers from the nearest 25 kHz point.

In a similar manner, other graphs can be made up for any band desired. It doesn't take long. Use 10 x 10 log paper to make interpolation easy.

An alternative to this is to add digital frequency readout. It is more expensive and, to date, there hasn't been much available unless you build your own from scratch. Digital frequency readout is really nothing more than a frequency counter with the added ability to offset a receiver's intermediate frequency.

For example, if the i-f is 455 kHz and you are tuned to a broadcast station on 1000 kHz, the counter will normally display 1455 kHz. If the counter has five digits to the left of the decimal point, the offset has to be 99545. When 1455 is added to the 99545, the counter with an offset calculates 101000. Given a five-digit display, the sixth digit (the "1") will be lost and the proper frequency—1000 kHz—will be displayed.

The problem is that counters which have the ability to load in any offset are rare and expensive. The breakthrough on the cost front may have been made, however. David L. Mattis describes a "Digital Frequency Readout for Shortwave Receivers" in the February, 1977, *Popular Electronics*; a kit of parts is available for $110.

As calculators have dropped in price over the recent years, I am sure that technology will soon lower these prices as well.

Another useful accessory is the active audio filter. One of the best ones for shortwave listening is the Autek Research (Box 5127E, Sherman Oaks CA 91403) QF-1, which has a variety of controls for selectivity and heterodyne rejection. The problem with many of the other filters commercially produced is that they are designed for CW only and cannot be adjusted to optimize AM reception.

Properly adjusted, an audio filter can make a poor or mediocre receiver "sparkle" in heavy interference conditions. Most filters are outboard and can be moved from receiver to receiver; connection is through a headphone plug into the receiver, and the speaker or headphones are plugged

into the audio filter.

For the shortwave listener trying to listen to broadcasts on 75 or 41 meters, or for the radio amateur trying to copy CW or SSB through the broadcasters, a good audio filter can do the trick. I can either notch out a CW heterodyne or roll off the tonal response to diminish SSB splatter when listening to the broadcaster; as a Novice, I tightened up the filter's bandpass and frequently worked within 1 kHz of the broadcaster's carrier frequency.

Don't forget that most receivers offer a 400 Hz CW filter, but a decent active audio filter can cut that bandpass down to 80 or 100 Hz, and that makes a big difference. There is one company on the west coast that offers a filter for Drake receivers, replacing the 400 Hz filter with one at 125 Hz, but that has to be wired in and costs about $125. It's good for the CW DXer, but not so good for the broadcast listener, so pick and choose carefully.

Another interesting device is the panadaptor. Unfortunately, commercial units manufactured today are very costly, but there are still a number of the Heath SB-620 pieces around for about $100 to $125.

The panadaptor visually displays, on a cathode ray tube (CRT), the receiver's i-f bandpass. Depending upon the settings, the SB-620 displays as little as 6 kHz ($\pm$3 kHz) or as much as 100 kHz ($\pm$50 kHz), centered on the i-f. Adjacent frequencies, occupied or empty, are readily seen, and the culprit causing the adjacent channel splatter cannot hide from view. With a 5 or 10 kHz calibrator, fairly precise frequency measuring can be done by displaying pips on the CRT and calibrating the baseline through the setting of the panadaptor controls.

If you pick up one of the SB-620s, try to get the extra coils that came with the unit. Heath provided a number of wiring options depending upon the receiver i-f. The Heath gear of the SB-series was set up on 3395 kHz, but it could be wired for anything from 455 kHz to 5200 kHz.

Another useful trick is to add a tape recorder jack to the receiver. The easiest way to do this is to mount a phone jack on the rear apron of the receiver and route lightweight shielded cable (such as is used in turntable arms) over to the volume control. Solder the shield to the end lug that is grounded, and solder the center conductor to the opposing end lug.

If you've done the job properly, the taping level will be independent of the volume control setting. This exercise is useful when you want to tape something without listening to it live. An auto-level-control cassette tape recorder works quite nicely in this capacity.

As an aside, I use an ALC cassette tape recorder when CW DXing. I don't have to worry about level settings, and, if I miss a call or want to check on an unusual spelling of a name, I'll have it on tape to check.

For longer taping jobs, consider putting a reel-to-reel tape recorder on a timer when you are out of the shack. You can turn the receiver volume down, and your wife won't even know that something's running. The tape can be replayed at your leisure.

If you have a tape with a poor signal due to interference and heterodynes, just replay the tape through your Autek QF-1 or other audio filter until you find a setting that does the trick. Don't have an audio filter? Replay the tape through your household stereo system and adjust the bass, treble, and "cut" controls until you find a setting that cleans it up for you.

Antenna tuners are another useful tool for the serious DXer. You can roll your own or look at Gilfer's catalog. A couple of 365 pF variables, a coil tapped at intervals, and a rotary switch are enough to make up a simple tuner.

If you have an antenna tuner for your ham band work, you will probably find that your unit will have enough latitude to resonate your antenna on the adjacent broadcast bands. Just peak it for maximum S-meter deflection on the receiver.

Antennas

What can be said on this topic that hasn't already appeared in *73* or in the books distributed by *73*? One premise says, "Put up antennas resonant to each band you want to listen to." That's a lot of hard work, and I suggest something a lot easier.

Receiving antennas are a lot more forgiving than transmitting antennas, and I just try to put up as long a wire as possible. I like to get up something at least 100 feet long and then tune it as needed—the higher, the better, and don't worry about the twists and bends around trees. If you have an option, run the bulk of the antenna perpendicular to the adjacent power lines to minimize noise pickup.

As always, don't cross under or over power lines and don't attach the end to a power pole. Even though you are dealing with a receiving antenna, the same safety rules apply.

Can't put up a long wire? Mount a steel 102" CB whip on the roof, and feed the receiver through RG-58/U and an antenna tuner. A vertical up high, free of the ground clutter, can be a respectable antenna, although verticals are usually more susceptible to local electrical noise.

Obviously, if you are active on the ham bands of 160-10 meters, just make use of the antennas you have up now. You'll find that you'll still be able to take advantage of the ham band antenna's features. For example, the 15 and 20 meter segments of a tribander beam will still exhibit directional effects on 25 through 13 meters.

In Closing

The shortwave broadcast bands offer some interesting challenges for the DXer. Most broadcasters run higher power than most DX stations, and listening to of some "flagship" stations can give an indication of propagation conditions in the adjacent amateur bands.

If you have a regular schedule with friends in a far distant land, listen to the news broadcasts by that country's "voice" and you'll have more interesting QSOs through your knowledge of their environment.

If you travel overseas, most stations welcome visits from their listeners. You probably will strike up a dual friendship as a listener and an amateur, as no doubt you will find a number of licensed amateurs at the larger stations you visit.

Frankly, citizens of the United States are spoiled by an extensive array and variety of AM, FM, and TV stations on the domestic bands. Elsewhere in the world, there are some vast areas not served by any particular domestic service, and shortwave broadcasting provides much-wanted information for those "armchair travelers" in remote areas.

The world is at the end of your antenna—just tune it in! You'll be a more interesting person for it.■

E. P. Rolek K9SQG/8
1595 Etta Kable Drive
Dayton OH 45432

The Mobile Dream Machine

—*Kenwood, Drake, Larsen . . . and Ford*

After purchasing a long-awaited Kenwood TR-7400A, Drake tone encoder microphone, and 5/8-wavelength Larsen magnetic-mount antenna, I decided to put my dream equipment into the family's 1972 Ford station wagon. The installation of this equipment was a nightmare for me, not because it was impossible, but because my profession deals with man-machine interaction and I had some rather stringent objectives:

1. Operation had to be convenient and safe whether I was driving the car or riding as a passenger in the front seat.

2. The wiring for the tone encoder had to be via the microphone jack rather than the accessory tone jack on the side of the 7400.

3. Coax had to be routed to the antenna with as little damage to the car as possible.

4. The mount and coax had to be secure and blend with the color of the car in order to please the XYL.

5. Scratching of the 7400's cabinet, side rails, and heat sink, due to insertion into the mobile mount, had to be minimized.

In order to enable easy installation and removal of the rig from the car, I decided to use a master connector panel. This is nothing more than a piece of sheet metal with all the necessary connectors on it for making connections to the rig. The panel is mounted close to the rear of the rig so that only short cables are necessary. Note that all connectors mounted on this panel must be insulated from ground and each other in order to avoid ground loop problems which, for me, initially appeared as alternator whine, ignition noise, etc. The only connection of the transceiver to ground should be via the negative power lead at the battery terminal and the coax braid at the antenna mount.

In order to be able to use the rig from anywhere in the front seat, I decided to mount it under the dash, in the center above the transmission hump. This tends to minimize spotting by thieves, but it's still best not to leave a rig in a car unattended. To further ease operation, I decided to run an extension microphone cable to the left side of the dash from the master connector panel so that the driver could use the microphone with his left hand and steer with the right hand. For right-handed drivers, this is safer, particularly when engaged in city driving with many turns and frequent use of turn signals.

By switching the microphone from the left side of the car to the center, anybody in the front seat can use the rig. A microphone holding clip is present in both locations. Also at the center of the dash on the master connector panel, where the microphone cable plugs in from the 7400, is a coax connector and Jones connector to allow easy hookup of the antenna and power leads.

This scheme, used with some flexible RG-8/U coax (Columbia number 1198, Superflex) gets the coax over to the antenna connector with no large bends. The antenna connector, on the master connector panel, is mounted with plastic washers to insulate it from ground.

It was immediately observed that the cable for the microphone had a large loop where it entered the front panel of the 7400; it looked bad and invited abuse. A 90-degree bend would solve the problem, only they don't exist. So I made one! It was necessary to use two connectors to make the bend, but it really improved the appearance.

For the ultimate in appearance, I decided that the power to and output from the tone encoder microphone should be routed via the 7400's front panel connector, not the tone pad jack on the side. It sounded simple. However, on-the-air reports said it was just about impossible. One fel-

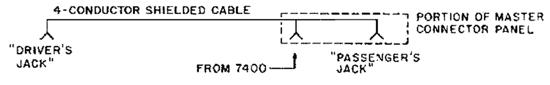

Fig. 1.

low said a local shop was doing it for $25. I looked at the photos in the owner's manual and could understand why. A phone call to Kenwood got me the scoop from a very courteous gentleman. My suspicions were confirmed—it can be done, but it takes time (a full 2 hours from plugging in the soldering iron to on-the-air use) and caution.

In addition to getting all the tools out, one would be wise to secure a magnifying glass, an X-acto™ knife, flashlight or high-intensity lamp, and jeweler's screwdrivers. Use these as needed. The project should start with a prayer; I don't think I could have done it otherwise. The following are the steps used, but they can be performed in any order; whatever order agrees with you is fine if it works. Placing the unit on a soft towel and using muffin tins for the parts is recommended.

1. Note all knob positions, preferably fully clockwise or counterclockwise, and then loosen setscrews and remove the knobs. The megacycle "lever" pulls off, since it has no setscrew.

2. Remove the screws for the bottom shell of the cabinet and remove the shell. Repeat for the top shell but be careful of the speaker leads. Disconnect the speaker leads on the circuit board (white lead goes to "SP" and black lead to "E").

3. Remove the rubber spacer pad from above the frequency display and the foam from above the tone squelch LED.

4. Remove the four screws around the perimeter of the front panel and, being careful not to scratch the plastic which will come loose from the frequency display window, remove the front panel.

5. Remove the six LED frequency display digits by unplugging them *in order;* they are *not* identical.

6. Unfasten the subassemblies for the tone squelch LED, the "on-air" LED, and the ±600 kHz offset LED, and store them out of the way.

7. Unfasten the dual pots used for the volume and squelch and store them out of the way.

8. Remove the four screws used to hold the PC board for the frequency display to the frame. Set it out of the way as best you can.

9. Depending upon your dexterity, approach the microphone connector from either above or below with the X-acto knife. Use the knife to cut the ground lead away from pin 4 and make sure there is no chance of it touching the other pins. Use a piece of small-gauge insulated wire and solder one end to pin 4. If your soldering iron is too large, wrap a length of bare 12-gauge wire around the tip and extend it out about one inch, parallel to the original tip. This will be a good "tip extension." Run the lead upward from the connector to the top side and route it along the left portion of the rig.

10. Locate a point labeled "T10" on the front edge of the TX unit board labeled X56-1230-10. Connect one end of a 1/4- or 1/2-Watt, 470-Ohm resistor to the point labeled T10 with a lead as short as possible. The resistor should rest against the metal shield with the other lead facing the left side of the cabinet.

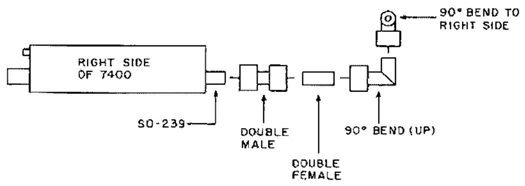

Fig. 2.

11. Slide a piece of tubing about two inches long over the wire going to the microphone connector. The tubing should be large enough to fit over the resistor. Connect the other end of the wire to the resistor lead, keeping it as short as possible. After soldering the lead to the resistor, slide the tubing over the resistor.

12. Reassemble the cabinet and subassemblies in reverse order.

13. Modify the Kenwood microphone supplied with the rig and any other microphones you plan to use to ensure that they do not have a lead which grounds pin 4. This pin has the supply voltage for the tone encoder when the rig is in transmit. Although the 470-Ohm resistor will limit the current, this is undesirable and could cause problems. Use pin 3 for the shield and PTT grounds.

14. Adjust the encoder output level, if needed, which is done via a pot inside the Drake microphone.

Routing the coax to the roof can be done in more than one way—via door openings or around windows. But these methods are susceptible to water leaks, pinched cable, and untidy installation. Investigation showed that the mounting posts for the luggage rack were hollow. Hence, the coax was routed under the carpet and up the side pillar to the roof. A hole was drilled through the roof after removing the post for the luggage rack. An SO-239 fitting was mounted in the post, and this allowed easy attachment of coax for the magnetic-mount antenna. The fitting was of the type which uses two nuts on the shell to mount it in a single hole rather than the type needing four mounting screws. The connector and hole through the roof were sealed with silicone sealer to guard against water leakage and chafing of the cable. A plastic cap covers

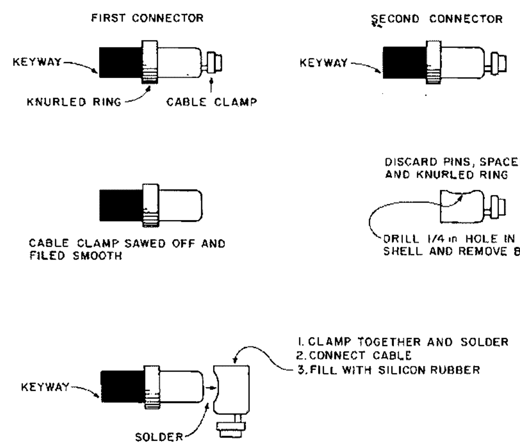

Fig. 3. Ensure that there is a cable sheath, or add spaghetti, where the wires pass through the soldered junction. This will prevent chafing.

the connector when it's not in use. I had to prune the coax to get the swr to an acceptable level. A large rubber boot for a battery clamp was used to protect the PL-259 against rain and snow.

In order to make the antenna more pleasant, if that can ever be done for an XYL, it was decided to cover the magnetic mount with plastic tape which roughly matched the color of the car. A coat of clear lacquer spray was applied over the tape. Magnets were taped to the coax to minimize its movement along the roof, which could scuff the paint. The XYL, being extremely considerate, agreed that the installation was perfectly acceptable—as long as the final approval could be handled over dinner at a nice restaurant.

As far as the problem of the mobile mount scratching the rails, cabinet, and heat sink, I could find no solution other than to put plastic tape on the cabinet. This is the only flaw I have found with the 7400, and it was quite unexpected considering my favorable experiences with my TS-520 and TS-820. Nobody said mobile was easy on equipment, so this is the price you pay. There are plans to house the fixed station power supply in a cabinet which will cover the 7400 in such a way as to hide the scratches.

I would appreciate hearing from others concerning their experiences with the 7400 and, more generally, with mobile operation to increase safety and ease of operation. This two meter installation is very enjoyable to use and is still very exciting, even for a seasoned ham.■

New Products

from page 49

as well as very high speed clock and control in computers and other equipments.

For additional information, contact *Continental Specialties Corporation, 70 Fulton Terrace, New Haven CT 06509; (203)-624-3103.*

SENCORE OFFERS EASY-TO-USE, INTERFERENCE-FREE 1 GHZ FREQUENCY COUNTER —MODEL FC51

A new, 1 GHz, all direct-reading push-button frequency counter has been introduced by Sencore for measurements in the newly authorized 806-947-MHz two-way communication business and police band. .5 parts-per-million accuracy also enables testing to FCC specifications in the 902-928-MHz medical electronics and industrial scientific band, the 470-806-MHz UHF TV band, and the 947-952-MHz oral broadcast band.

A 50-Ohm input is provided for communications measurements from 10 MHz to 1 GHz at an average sensitivity of 100 millivolts to assure a clean, interference-free signal pickup with either the supplied untuned pickup loop or the supplied adjustable antenna. An external, optional 30-dB wideband amplifier, Model WBA52, simply plugs into the 50-Ohm cable system to increase sensitivity to 5 millivolts for troubleshooting low-level stages, measuring any communication generator accuracy, or for remote transmitter documentation. The FC51 is powered by 115 volts ac or plugs into the 12-volt cigarette lighter of any vehicle for these remote checks.

An easy-to-use crystal check is included as an integral part of the frequency counter because crystals are the first suspect when measurements are not to FCC specifications. The FC51's highly-accurate 10-MHz crystal clock oscillator is also buffered and brought out the back to serve as a check against WWV or to calibrate less accurate frequency counters or other equipment. The clock oscillator is plugged in and removable for exchange with the factory Service Department for calibration purposes to assure no down time. The oscillator is also available for separate purchase. Price of the FC51 is $975.

Sencore, 3200 Sencore Drive, Sioux Falls SD 57107; (605)-339-0100.

THREE NEW OSCILLOSCOPES FROM HICKOK

Quick and easy setup and operation are the key features in a new line of push-button triggered oscilloscopes being introduced by the Hickok Electrical Instrument Company. The line consists of three low-priced models, all of which feature automatic triggering, color-coded front panels, and conveniently grouped controls that speed up and simplify operation. All three models are aimed at industrial, commercial, and consumer service applications. The scopes are also suitable for cost-conscious production testing applications which usually do not require extremely wide bandwidths.

The Model 532 at $995 (including probes) is a dual-trace 30-MHz scope with 11.7 ns rise time and a built-in delay line for leading edge viewing of fast rise time pulses. Among its many features is a full-time 4x expansion that allows any portion of a pulse train up to 40 full divisions long to be viewed without the use of a multiplier. Well suited for logic and pulse circuit applications, it is capable of testing most digital logic circuits—including microprocessors.

The Model 517 is a dual trace 15-MHz scope with 5 mV/cm sensitivity and reliable trigger-

Continued on page 63

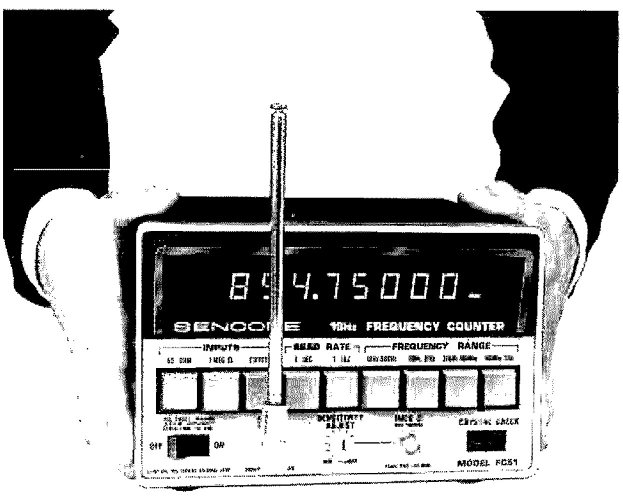

Sencore's FC51 1 GHz counter.

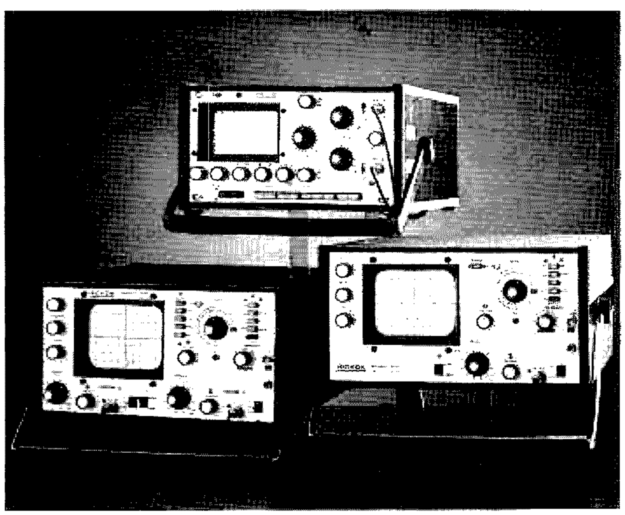

Hickok's new oscilloscope line.

Billy L. Nielsen WB4APC
Rt. 2, Box 253E
Radcliff KY 40160

Be A Surplus Survivor

—don't get burned by a boat anchor

After you have that new Novice ticket, you have to think about getting on the air. Having seen the prices of some of the new solid state equipment, I am going to offer another possible route for getting started. There are many inexpensive allband rigs available at a reasonable price in the surplus market. In addition to being in some cases very inexpensive, the surplus gear also offers the new Novice a chance for actual hands-on experience.

When I was first licensed as a Novice in 1958 as KNØGHF, my first transmitter was built from parts of an old discarded television receiver. It consisted of a 6AQ5 oscillator, a 6AQ5 buffer, and a 6AQ5 final running a whopping ten Watts. Later, I acquired an 807 and modified the final and the power supply to meet the voltage requirement. My receiver was a surplus ARC-5 for the forty meter band, to which I added a volume control, an on-off switch, and a bfo on-off switch. I had the receiver B+ dropped down from the transmitter supply, controlled through a relay.

I will never forget the thrill of my first Novice QSO. At that time, I was stationed near a small town in mid-Missouri, and my first contact was a ham in eastern Virginia. I think the biggest thrill was having the satisfaction of seeing the home-brew transmitter putting out a good clean signal.

But enough of the past. Let's take a look at what is available in the surplus market today. The most popular, and the most converted, is the old ARC-5 equipment. There have been numerous articles written in amateur radio publications, so I will not go into any elaborate conversions. The ARC-5 sets are still available from surplus dealers at a price range of $18 to $20 for the receivers and $14 to $16 for the transmitters. An added extra is the use of an ARC-5 for the station vfo, and the low-frequency receivers can be modified into Q-5ers.

Another old favorite was the Navy TCS series of receivers and transmitters. Quite a few conversions have been written on both sections of this old set, both separately and as a complete station. A unit currently being advertised by Fair Radio Sales Company which shows promise for the more advanced builder/conversionist or experimenter is the RT-380/AR or the old Collins Model 18S4 transceiver.

I would like to point out one thing to beware of in selecting a piece of surplus equipment. Unless one has access to a 400-cycle power source, do not consider any of the autotune units without being prepared to perform some extensive modifications. Otherwise, the only thing to remember is that almost all of the military equipment was designed to operate from a 24-volt dc source, and, in many cases, the high voltage supply was a separate unit. With a

Bary Electronics Corp. 512 Broadway New York NY 10012	1, 2
Fair Radio Sales Co., Inc. PO Box 1105 Lima OH 45802	1, 2, 3
Edlie Electronics, Inc. 2700 Hempstead Turnpike Levittown NY 11756	1, 2, 3
Slep Electronics Co. PO Box 100 Otto NC 28763	1
Selectronics 1206 Napa Street Philadelphia PA	1, 2
Gadgeteers Surplus Electronics, Inc. 5300 Vine Street Cincinnati OH 45217	1, 2
G & G Radio Supply Company 75-77 Leonard Street New York NY 10013	1, 2
Columbia Electronics Sales 4365 West Pico Blvd. Los Angeles CA	1, 2
Arrow Sales-Chicago, Inc. 2534 South Michigan Avenue Chicago IL 60616	1, 2

Table 1. Surplus dealers. Notes: 1—equipment; 2—parts and components; 3—manuals and schematics.

few exceptions, the tube lineup consisted of a number of twelve-volt tubes in a series-parallel arrangement. A study of the set diagram will reveal whether or not six-volt tubes may be substituted and the heater string run from twelve volts. The plate, screen, and bias supply can be built from a discarded TV set. I have found many a discarded TV set which contained a good husky power transformer, as well as a choke and some tubes. It should be noticed that the TV power transformer was designed to furnish filament voltage for ten to fifteen tubes plus the high voltage for the various tubes.

When converting surplus equipment, it is always advisable to obtain and study thoroughly the schematic diagram. In this way, a better understanding of what is being done in the conversion is acquired. Although many of the original manuals have long been out of print, schematic diagrams of most of the useful sets are available from CQ *Magazine* as well as Editors and Engineers (Howard Sams and Co., Inc., Indianapolis IN). Back issues of *CQ, 73,* and *QST* also have many schematics as well as conversion articles on just about anything worthy of conversion. A list of some of the surplus dealers as well as sources for technical manuals is included in Table 1 for your information. I will also make my library available for those who run into difficulty or need information. Please include a self-addressed stamped envelope with your request. Happy hamming. ■

New Products

from page 60

ing up to 30 MHz. Priced at $695 (including probes), the Model 517 features automatic selection of chopped or alternate operation in dual-trace mode depending on sweep speed selected. Complete with algebraic sum and difference capability as well as TV line and frame sync circuits, the Model 517 is ideal for TV, VCR, audio, and video maintenance and repair as well as design and troubleshooting of most digital logic circuits.

The Model 515 offers most of the features of the Model 517 in a lower-priced ($495 including probe), single-trace version well suited to industrial and consumer servicing as well as laboratory and educational applications. TV sync separators are built in for easy locking to complex TV video waveforms at any sweep speed and, like the Model 517, it provides x-y operation for vectorscope measurements.

Engineered and designed for fast, reliable operation with minimal training or familiarization, the new line of Hickok scopes is currently in stock at Hickok distributors throughout the country.

The Hickok Electrical Instrument Company, 10514 Dupont Ave., Cleveland OH 44108; (216)-541-8060.

Triplett's Model 3300 DVOM.

NEW MODEL 3300 HAND-SIZE 3½ DIGIT DVOM FROM TRIPLETT HAS BETTER READABILITY, ACCURACY, AND BATTERY LIFE

The new 3½ digit Model 3300 digital VOM just introduced by the Triplett Corporation features an easily read .3" high digit LED readout display with polarity indication, .5% accuracy, and low power-Ohms. The five-function, 22-range Model 3300 offers complete portability with precision measurement capability, and sells for only $175, complete with long-life nicad batteries and ac adapter/charger plus test probes with safety boots.

It is only 3" wide by 5-3/8" long by 1-3/8" deep. Ideal for test bench or field use, for circuit testing, design work, production line checks, industrial maintenance, and general-purpose applications.

A snap-in Battery-Pac™ with the nicad batteries and ac adapter/charger recharges separately or within the tester.

The Triplett Model 3300 is a safety-conscious design with no exposed metal parts and it includes a high energy 2 A, 600 V fuse for ample overload protection. A fused probe provides for both high-energy and normal-use circuit protection. The molded gray high impact thermoplastic case with a non-slip finger tread finish offers structural strength, light weight, and professional instrumentation styling.

Overrange is indicated by a blinking display and a low-battery warning is included. Dc polarity is automatic with indication directly on the readout display.

Single-selector switch ranges include: .2-600 V dc; .2-600 V ac (60 Hz) with 10 megohm/100 picofarad input impedance on all ac ranges; Low-Power (200 mV FS) 0-2 megohms with zero adjust for lead resistance; Hi-Power (2 V FS) 0-20 megohms; ac and dc milliammeter reads 0-200 mA. Typical dc accuracy is .5% of reading.

Full details on the new Model 3300 DVOM and its complete line of accessories may be obtained by contacting *Triplett Corporation, Bluffton OH 45817; (419)-358-5015.*

NEW MOBILE DISGUISE ANTENNAS AVAILABLE FROM ANTENNA INCORPORATED

Antenna Incorporated has introduced a new line of Mobile Disguise Antennas that are visually indistinguishable from standard broadcast antennas. These antennas are for the growing land mobile two-way business radio market.

The Mobile Disguise Antennas are available in two mounting configurations: Ford style or standard universal cowl mount, for either the single band or combination AM/FM land mobile models. A special matching harness is included with either model.

Offered in three frequency ranges, 25-54 MHz, 130-174 MHz, and 406-512 MHz, the Disguise Antennas are factory tuned to the frequency the customer specifies. Maximum power is over 150 Watts for the single-band model, or 100 Watts for the combination AM/FM land mobile model. The radiation pattern is essentially omnidirectional, dependent on

Continued on page 71

Tracking the Wild Turkey

—DF tips

Mike Naruta WA8BHR
4466 Burtch Rd.
North Street MI 48049

How would you like to find that repeater jammer? Maybe you're in a small boat. The compass tells you in which direction you are pointing, but not your location. Perhaps you want to reject stations from one direction and listen to another direction. Or maybe you just want to know if that transmitter is really where he says he is. How do you do it?

Well, the simplest type of directional system is using a directional antenna. The half-wave dipole antenna has rather broad peaks. See Fig. 1. The secret in using directional antennas for direction-finding is not using the peak response, but rather the nulls. It is much easier to hear the difference between a small signal and no signal than it is between a large signal and a larger signal.

A better antenna would be the common "loop" antenna. If the circumference of the loop is about one wavelength, the pattern is similar to the dipole: The peaks are perpendicular to the plane of the loop. If the loop is a small part of a wavelength, the pattern changes: The loop's strongest reception is in the direction of the plane of the loop. See Fig. 2. This occurs because the antenna operates on the difference in strengths between one side of the loop and the other.

The loop antenna can be improved with the addition of a ferrite core, as is used in the common pocket transistor radio. The basic broadcast transistor radio is a very sensitive direction-finding device. At one New Year's Eve party, my friends had a transmitter hunt using pocket BC radios. The technician of the group had built a very small oscillator, less than half a cubic inch. We took

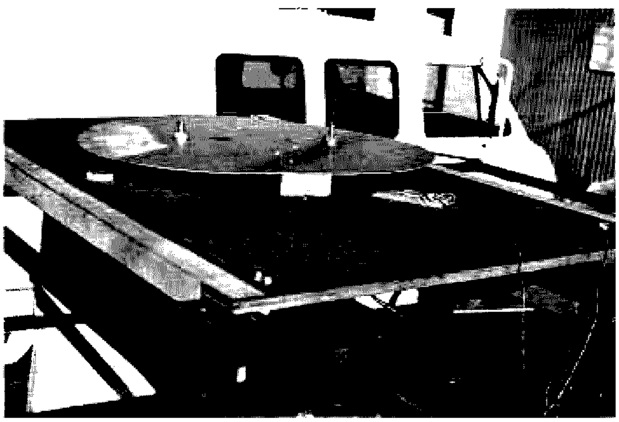

Why not try out this strange-looking direction-finding device?

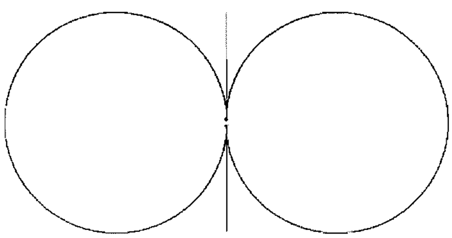

Fig. 1.

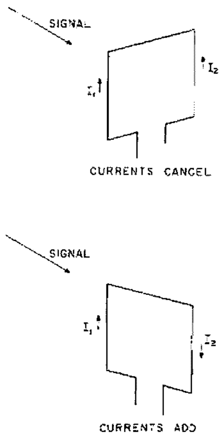

Fig. 2.

turns hiding the oscillator and tracking it down with the radios. It didn't take long to find the oscillator in the most unlikely places, and it was great fun.

Many years ago, some guy didn't like turning the loop around constantly, so he figured out a way to motorize it. By taking the output of the receiver, amplifying it, and feeding it to a motor connected to the loop, the loop would keep turning until the signal dropped off, at the null. If you added some kind of position-indicating device to the antenna, such as a senslyn, the antenna could be quite a distance from the operator.

There is a problem with this system. The loop antenna is bidirectional, a figure eight pattern. That means there are two peaks and two nulls which it can lock onto. However, by adding another antenna, a vertical this time, and combining the signals properly, a cardioid pattern with one sharp null is produced. See Fig. 3. Now our system automatically points in the proper direction and indicates where the station is. Indeed, ADF (Automatic Direction-Finding) or "Radio Compass" has been used on aircraft and ships for many years.

If you don't want a loop antenna spinning around

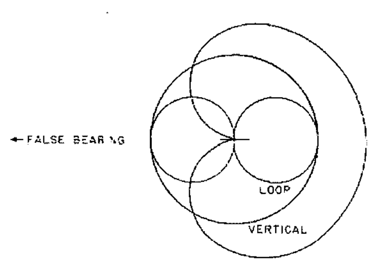

Fig. 3.

outside the aircraft, the loop can be brought inside and fooled into thinking it is still outside. A goniometer is a set of fixed loops that receives the signal and brings it inside the instrument. Inside, another loop responds just as if it were outside. See Fig. 4. The instrument and leads must be well shielded. Just attach a pointer to the movable coil and you have only one moving element. Used primarily for 90 to 1800 kHz, it provides a good system for indicating the direction of a station. You can fly "to" a station or "away from" a station. To find your position, or the position of a transmitter, you need another "fix." See Fig. 5.

Another aircraft navigation system is VOR. It stands for VHF Omni Range and is transmitted from 108 to 118 MHz. To get an idea of how VOR works, try visualizing a lighthouse. Picture the beam as it sweeps around. Imagine that whenever the light beam points exactly north, the lighthouse sounds its foghorn. If you were on a boat, and you knew the time it took the beam to go around completely, you could determine which direction you were from the lighthouse just by waiting until the foghorn sounded and counting the time until you saw the flash of the light. See Fig. 6. This is just how it works in VOR. The signal is transmitted as if it were rotating very fast. An omnidirectional pulse is transmitted when the beam is pointing north. A VOR navigation receiver times the interval between the sync pulse and the reception of the "searchlight" beam. This system tells the pilot which "radial" he is on. Note the difference between ADF and VOR: ADF tells the pilot which direction the station is with respect to his craft. VOR tells the pilot which direction he is with respect to the station.

Another method of finding yourself is loran. If we know that two stations transmit a pulse at the same time, we can time the difference between their arrival times at our location, thereby learning our relative position between the two stations. If we receive the pulses from the two stations at exactly the same time, we know that we are equally distant from both stations. See Fig. 7, ship X. If we find station A's pulse arriving before station B's, we know that we're somewhere between the centerline and station A. See Fig. 7, ship Y. By using at least three loran stations (see Fig. 8), we can find our position. Like VOR, loran tells us our position, but not what direction we are facing. Loran operates on four frequencies, 1750, 1850, 1900, and 1950 kHz, with 40-microsecond pulses occurring about 25 times each second. It's quite a racket, as anyone who has listened to the 160 meter band can tell you.

Somewhat similar to loran is the omega system. Orginally designed as an

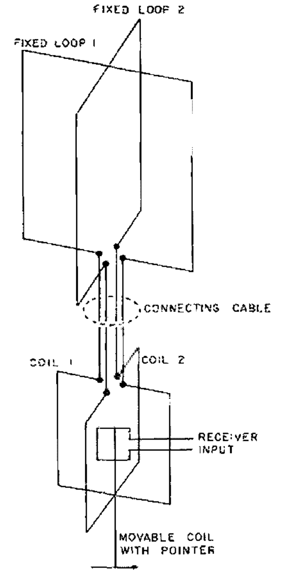

Fig. 4.

ocean locating system, omega uses the VLF band (10 to 14 kHz). With only eight stations and the advantage of VLF, it covers the world. Using a nice, long wavelength, omega devices analyze the phase difference of signals being received.

The military uses "stationary" satellites for a high band position-finding system. The receiver is very accurate. You can march around the world with a little box on your back, always knowing exactly where you are.

If you would like to experiment with direction-finding, try out a loop antenna. They are not hard to make. Just make sure that with a shielded loop, you don't close the shielding entirely; leave a small gap at the top or you won't hear anything. A shielded loop reduces electrostatic noise and increases accuracy. When using the loop for receiving, you may find it more convenient to tune the null to reduce QRM from another station, rather than try to peak on the desired station.

On VHF you might want to try a quad antenna. I

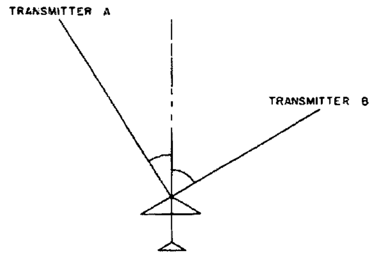

Fig. 5.

saw a folding quad for 2 meter T-hunts made from a TV antenna. The foldout elements are used for horizontal spreaders, with fixed vertical spreaders fitted into holes drilled in the boom.

For transmitter hunts, the loop is pretty slow. If you are trying to locate a repeater kerchunker, in the second or two it takes you to rotate the loop, he is gone. While working at a business radio shop in California, they were having trouble with their radios disappearing from customers' vehicles. After the theft, the customers would be hit with all sorts of jamming. The solution was the strange-looking device shown in the photo. The big circular plate is aluminum. Two quarter-wave vertical antennas are exactly 1/2 of a wavelength apart. This gives a figure eight with sharp nulls. To catch the short transmissions, the disk is spun about three times a second by an electric motor on the frame below. The feedline from the antenna array runs down a water pipe shaft, terminating in a BNC connector, but the outer shell is not tightened, providing an excellent rotating contact.

At the edge of the disk is a block with a small magnet. On the plywood base under the path of the magnet is a reed relay. When the magnet passes the reed relay, it closes to give a reference pulse indicating that the antenna is pointing straight ahead. Now the clever part. Using an oscilloscope, the vertical amplifier is fed from the receiver just before the limiter. The horizontal sweep is set to approximately the amount of time it takes the disk to make one revolution. The reed relay sets off the sync circuit. On the scope display, the null is a dip in the trace. If the null occurs right at the start of the trace, you know the source is directly ahead. If the null is one quarter of the horizontal distance across the trace, the transmitter is to the right or left of you. Since the array is revolving so fast, it only takes a fraction of a second to get a bearing. In the time it takes to key up the repeater, you can get a fix on the transmitter. (Don't forget to do your transmitter hunting on the input frequency of the repeater.)

If you don't want to build it yourself, manufacturers offer ready-built direction-finders. L-Tronics of Santa Barbara CA has several models, starting in the $135 price class.

There are other forms of direction-finding and position-locating. Remember, direction-finding usually depends on some type of antenna array. Position location can use direction-finding techniques, but often examines some characteristic of transmitted signal. You can start out in direction-finding with just a simple loop antenna. Give it a try. It's fun. ■

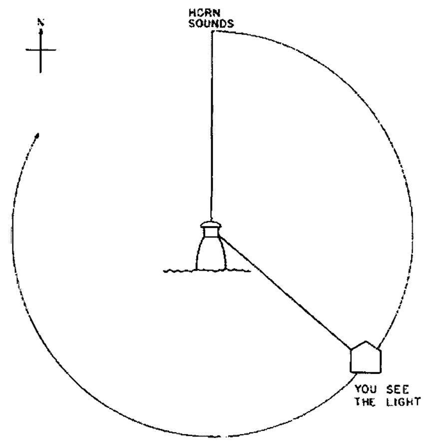

Fig. 6.

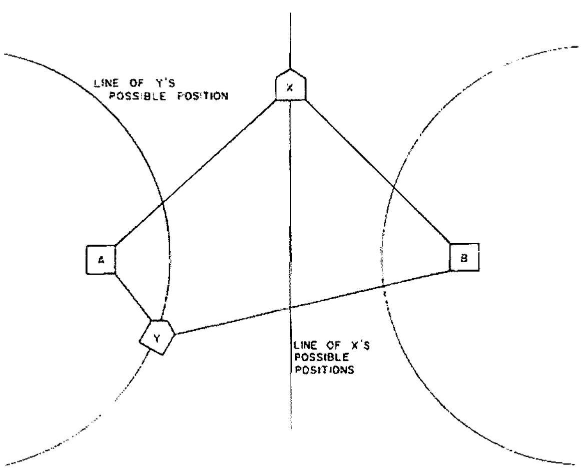

Fig. 7.

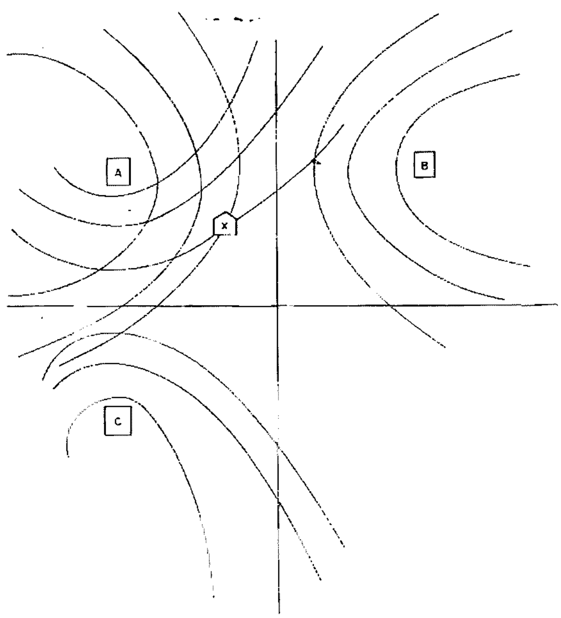

Fig. 8.

William Vissers K4KI
1245 S. Orlando Ave.
Cocoa Beach FL 32931

High Q Antennas

—stop worrying about swr

When a friend of mine once proudly told me that his ordinary eighty meter dipole had a band-edge swr of about 1.8:1, instead of congratulating him, I said, "Oh, isn't that too bad." Well, he almost flipped. But after we started to talk a bit about antenna losses, his pride turned to consternation. Actually, his antenna was an inverted V, quite low, with the ends about seven feet from the ground. There were enough trees and bushes nearby to provide losses. And, in addition, the ground was sandy, so there were losses from that, too.

When the same antenna was later relocated with a better overall height, without nearby trees and bushes, sure, his swr went up, but so did the overall antenna performance.

Although I am in favor of special antennas, such as the parallel stub double bazooka, discones, bow ties, and others that can lower swr because of their basic broadband characteristics, I am concerned at low swr in an ordinary dipole. It generally means high losses. So take a good look at lossy objects near your antenna that might be causing problems. Although any object near an antenna can induce both resistive losses and a change in the antenna reactance and Q, to simplify thinking, I will disregard such changes in reactance for two reasons. First, a change in antenna reactance is not a power loss, and, second, it would be almost impossible to predict such reactance changes in an amateur antenna system.

And that is why I thought it would be both interesting and useful to expand some basic antenna theory into a presentation that will relate antenna resistance, Q, and swr. The graphical presentation allows for easy understanding without having to delve through pages and pages of complicated mathematics that too often obscure what one is really trying to say. Radio amateurs come from all walks of life, and the high mathematics of the specialist can and always should be boiled down to a level where they are easily understood by all of us.

Now that I've decried high math, and also to prove my point, I'll show how simple, easily understood and explained calculations will be used for those who want to do a bit of figuring on their own. Specific calculations will be shown for those who have rf bridges and would like to translate their measurements into useful information. My calculations will show rf bridge measurements can easily be translated into swr and Q. And, by showing how the curves were derived, you should understand them a bit better.

Conditions and Stipulations

In order to keep the basic math and concepts as simple as possible and yet not lose the overall concept of the presentation, the following conditions and stipulations are made.

1. A basic eighty meter dipole, resonant at 3.75 MHz, will be used as reference. Its characteristics will be described as a simple series circuit with R being the antenna resistance at resonance. The antenna inductive reactance will be shown as X_1, and the capacitive reactance will be shown as X_C.

2. It will be assumed that the antenna resonant resistance will stay the same over the entire band. It does vary to some degree, but this assumption is quite common in simplified antenna analysis.

3. The swr values will be shown for the band-end condition of 3.5 MHz. The values of swr at 4.0 MHz, if calculated, would be found to be slightly lower, but this in no way invalidates the aim of understanding concepts.

4. Q is designated as antenna inductive reactance divided by antenna resistance at the resonant frequency, which, as I said, was chosen to be 3.75 MHz.

5. A feedline impedance of fifty Ohms will be used for

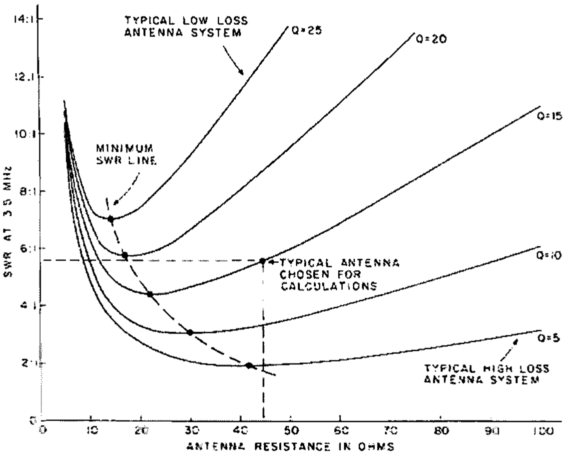

Fig. 1.

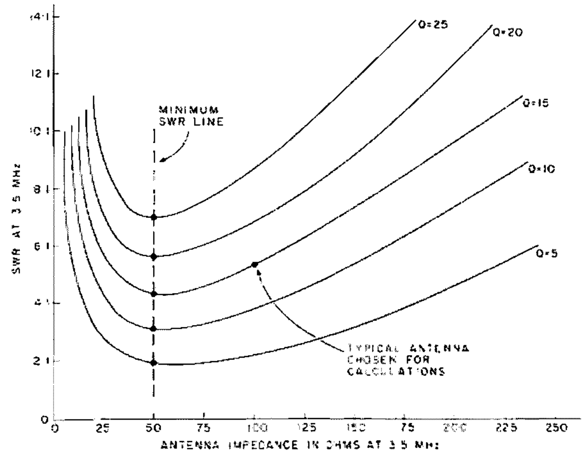

Fig. 2.

the Q curves, Q equals 5 to Q equals 25, shown. Fifty Ohms was chosen, as that is the value of feedline impedance used by most amateurs. However, an additional curve will be shown for a specific stipulated antenna to show how swr can vary with feedline impedance for a given aerial. The specific antenna will be the same as the one chosen for the calculations, namely one of 44 Ohms resistance with a Q of 15, which means an antenna with a resistance of 44 Ohms and a capacitive reactance of 91 Ohms at 3.5 MHz. By using a specific antenna with numerical values, it will be very simple to show how rf bridge antenna measurements can be translated into swr and Q later on.

Losses and Swr

If you could conveniently neglect antenna losses, you would realize that a low swr antenna has several advantages. Low swr means that the loss in your feedline is a bit less for the same power transmitted at a high swr. Low antenna swr also means that it is much easier to match your transmitter which is designed for a 50-Ohm load into your 50-Ohm antenna feed system. And, if your transmitter does not have good matching capability at high swr loads, this can mean, in some cases, lowered equipment efficiency. And, also, a high swr can cause excessive voltages and currents to be developed in your transmitter. So low swr does have advantages. But, if your low swr is obtained by a lossy antenna system, you haven't gained anything. You are actually losing some of your power to trees, bushes, roofs, or what have you. So low swr isn't always the blessing you might have thought it to be.

You know that Q in a tuned series circuit is both a figure of merit and also a function of selectivity. Also, briefly, the lower the Q, the less the selectivity. If you think of the Q of an antenna circuit, you realize that the antenna resistance is not just a loss resistance. The antenna resistance is made up of two components: a radiation resistance, which is desirable, and a loss resistance, which is undesirable. Like a tuned circuit, the lower the resistance, the higher the Q, and the higher the Q, the higher the selectivity. High selectivity means a high swr. So basically, the higher the Q, the higher the swr. And, all things being equal, the higher the Q, the less your losses, and the more efficient your antenna is. Antenna losses from outside sources are coupled into your antenna just like the resistance that can be coupled into a tuned circuit. Although complicated engineering measurements and calculations can be used to differentiate between useful radiation resistance and useless loss resistance, such an analysis is far beyond the scope of this article. To emphasize the desirability of keeping losses down, don't worry about a high swr. It means that, if your antenna resonates properly at your center frequency, your band-end swr just shouldn't worry you. But if it's low, you had better start looking at what the causes are.

The Graphs

And now to look at what the curves tell. Fig. 1 is a plot of antenna resistance versus swr for five different values of Q. The curves are shown for the band end of 3.5 MHz. One thing is immediately apparent – the lower the Q, the lower the swr, and the higher the antenna losses. You also see that, for a specific value of antenna Q, there is one value of antenna resistance that gives the lowest possible value of swr. And you also see that two different antennas both having the same value of Q can have differing values of swr. To show this point, I'll pick off some values from the Q-equals-15 curve. At an antenna resistance of 44 Ohms, you have an swr of 5.6:1. But, if the antenna resistance drops to 21.75 Ohms, the swr drops to 4.38:1. If the antenna resistance was to drop even lower, the swr would increase.

Although the factors of Q and antenna resistance are not readily controllable in an ordinary dipole antenna, it clearly shows that differing antenna systems can show differing values of swr. In addition, you know that antenna resistance among other things is dependent upon height. This is why it is impossible to make any broad generalizations about swr. That's all the more reason it should be more thoroughly understood.

On Fig. 1, you can, as a matter of interest, connect the points of minimum swr for the various Q curves and see how minimum swr relates to Q and antenna resistance. As a further interesting item, I'll say now and later show that, at all of these points of minimum swr, the antenna impedance at the band end of 3.5 MHz is fifty Ohms. And this value of impedance is the same numerical value of the feedline which I had established as fifty Ohms as the reference. But it is very necessary to say numerical value, as the antenna impedance, as you shall see, is a complex quantity made of resistance and reactance. It is only at the resonant frequency that the antenna ever looks like a pure resistance.

If, for example, you took

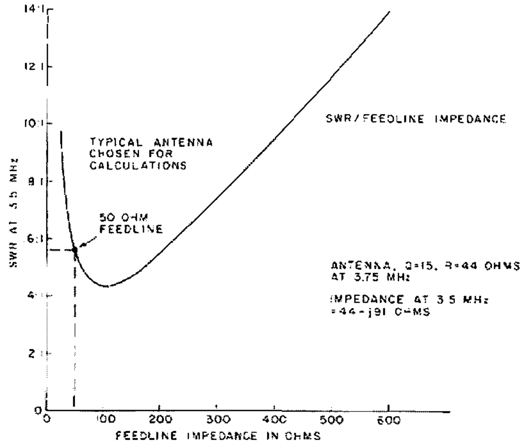

Fig. 3.

the point of minimum swr on the Q-equals-15 curve and measured the impedance at 3.5 MHz, you would find it to be equal to R equals 21.75 Ohms and X equals 45.1 Ohms capacitive reactance. The absolute value of the impedance Z equals:

$\sqrt{R^2 + X^2}$ equals

$\sqrt{21.75^2 + 45.1^2}$

equals 50 Ohms impedance. And you would find that the swr at this impedance would be 4.38:1. To show this relationship even more clearly, Table 1 indicates all of the relevant data for different values of Q. Fig. 2 shows a plot of antenna impedance Z versus swr for the Q curves.

The curves of Fig. 2 and the data of Table 1 tell that, even though the impedance is fifty Ohms for the minimum value of swr, you have to think about the resistance and reactance values rather than just the impedance Z. At the low swr, low Q, the antenna has a predominantly resistive component. At the high Q-curve, the antenna is predominantly reactive. It also tells that, if you want to make any meaningful antenna measurements, you will need a bridge that can measure both R and X. A bridge that will only measure the absolute quantity Z can very easily lead to erroneous conclusions. But simple rf bridges to measure R and X can be easily built or obtained commercially. There is nothing more conducive to learning about antennas than making your own measurements and calculations and analyzing the results.

Conclusions

The curves themselves show the various interrelationships between Q, swr, and antenna resistance along with the concept of a minimum swr. It is now clear that a low swr on an ordinary dipole means a lossy antenna system, and also that a low swr is really not something to be proud of. A high-Q antenna would be far more praiseworthy. Get off the low swr kick, and think about high Q and antenna efficiency. You'll find it pays off. High swr can be handled by means of a simple antenna coupler or matchbox, if your transmitter doesn't load out properly without one. Or, as I mentioned, specialized antennas designed to give broadband performance, such as the parallel stub double bazooka (August, 1977, *73 Magazine*), the discone, or the bow tie, can be utilized. The curve of Fig. 3 is important in that it shows the relationship of swr to feedline impedance for a specific antenna. The antenna values chosen are 44 Ohms resistance and a Q of 15. This means a band-end impedance of 44 Ohms resistance and 91 Ohms capacitive reactance at 3.5 MHz. You see that, at a feedline impedance of fifty Ohms, the swr is 5.6:1. But, if a feedline impedance of 600 Ohms is used, the swr goes up to 13.95:1. And yet the antenna is the same in both cases. This shows one other variable that can affect your swr value.

It is hoped that these observations will lead to a better understanding of why a dipole often acts as it does and also that they will encourage the experimentation that is really a fun thing in our fascinating hobby of amateur radio.

R	X	Q	swr	Z
10	48.99	35.47	9.90	50
15	47.70	23.03	6.51	50
20	45.825	16.59	4.79	50
25	43.3	12.54	3.73	50
30	40	9.65	3.00	50
35	35.71	7.38	2.45	50
40	30	5.43	2.00	50
45	21.79	3.50	1.60	50

Table 1. This table shows minimum swr values of different antennas of varying Q at the band edge of 3.5 MHz. It indicates how widely the values of X and R can vary, even though the impedance looking into the feedline antenna system is 50 Ohms (complex impedance) in each case.

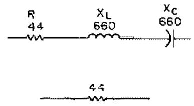

Fig. 4.

Calculations

Let's first draw a simple dipole antenna at resonance at 3.75 MHz and represent it as the series circuit of Fig. 4. If you assume a resistance of 44 Ohms and a Q of 15, it is easy to calculate the inductive and capacitive reactance in Ohms: $X_1 = X_c = Q \cdot R = (15)(44) = 660$ Ohms.

Now, if you tune the antenna to 3.5 MHz, the inductive reactance will decrease to: $X_1 = (660)$ (3.5 MHz/3.75 MHz) = 616 Ohms.

And the capacitive reactance will increase to: $X_c = (660)$ (3.75 MHz/3.5 MHz) = 707 Ohms.

And the difference equals: 707 - 616 = 91 Ohms capacitive reactance.

So the antenna at 3.5 MHz will look like Fig. 5.

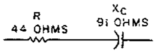

Fig. 5.

The absolute value of antenna impedance will be equal to Z:

$$Z = \sqrt{R^2 + X^2} = \sqrt{44^2 + 91^2} = 101 \text{ Ohms.}$$

The swr is calculated from the basic equation: swr = $(|Z_a + Z_c| + |Z_a - Z_c|) / (|Z_a + Z_c| - |Z_a - Z_c|)$, where Z_a is the antenna impedance and Z_c is the feedline impedance. The notation $|\ |$ actually means $\sqrt{R^2 + X^2}$ as you shall see when you put actual numerical figures in. The specific value of antenna impedance will be: $Z_a = 44_R$ and 91_X. I have identified the four parts of the swr equation as (1), (2), (3), and (4), as follows, to make the calculations easy: (1) $|Z_a + Z_c|$; (2) $|Z_a - Z_c|$; (3) $|Z_a + Z_c|$; and (4) $|Z_a - Z_c|$. So (1) equals $Z_a + Z_c$, and Z_c, the feedline, is 50_R. (1) of the swr equation $= |44_R - 91_X + 50_R| = |94_R - 91_X|$. This equals

$\sqrt{94^2 + 91^2} = 130.8$.

And, also, (1) equals (3).

Now, if you put in figures for items (2) and (4) of the swr equation, you see that (2) = (4) = $|Z_a - Z_c| = |(44_R - 91_X) - 50_R| = |-6_R - 91_X|$. Evaluating, you see that this equals $\sqrt{6^2 + 91^2}$, which equals 91.2 = (2) = (4).

Now, putting (1), (2), (3), and (4) in the swr equation together, you see that swr = [(1) + (2)]/[(3) - (4)] = (130.8 + 91.2)/(130.8 - 91.2) = 222/39.6 = swr = 5.6 at 3.5 MHz.

So you see that it really isn't difficult to calculate swr if you know the resistance

and reactance of your antenna at 3.5 MHz and know what your feedline impedance is.

The only remaining thing to do is to show how you can calculate the antenna Q. To simplify things, you will have supposedly measured the antenna resistance as 44 Ohms and its reactance as 91 Ohms at 3.5 MHz. By means of the easily derived equation below, you can, with this information, determine the reactance of the antenna at resonance. The equation is as follows: X_1 at 3.75 MHz = $[(X_{3.5})$ (3.5 MHz) (3.75 MHz)$]$ / $[$(3.75 MHz + 3.5 MHz) (3.75 MHz - 3.5 MHz)$]$.

So X_1 at resonance = (91) (3.5) (3.75) / (7.25) (.25) = 660 Ohms.

Knowing that, $Q = X_1/R$ = 660/44 = 15 = antenna Q.

So you see that, with the information given, it will be readily simple to calculate swr and antenna Q if you know the measured values of R and X.

This article has not taken into account line losses, as this would perhaps complicate the general approach desired. But briefly, line losses will decrease both swr and Q values calculated. It is realized that some of the calculations can be done by means of Smith charts. However, as simple hand calculators are almost in common use by all amateurs, I felt that the approach used here would show how to actually do calculations, instead of teaching the specialized approach of the Smith charts. And, lastly, very few amateurs actually have Smith charts in their possession. As the calculations are of value only to those amateurs who have rf bridges, I felt that the general approach would give the most information to most amateurs reading this article. Math is only essential for those who actually are going to use it. It is not necessary to understand general principles. ■

New Products

from page 63

vehicle and mounting location. VSWR is 1.5:1 or less.

The antennas feature 32" whips made of permanent set, impact resistant 17-7PH stainless steel. High-quality 17' coaxial cables with matching transformers and PL-259 connectors are used to ensure dependable performance. All antenna connections are solderless. In-line cable connectors are provided on AM/FM models for easier installation and routing through openings as small as 3/8".

For further information on the new Mobile Disguise Antennas for land mobile applications, contact *Antenna Incorporated, 26301 Richmond Road, Cleveland OH 44146; (216)-464-7075.*

INTEGRATED CW MESSAGE MEMORY MATCHES 8043/4 KEYERS

A one-chip message memory control IC has been introduced by Curtis Electro Devices. Called the 8047, this 28-pin CMOS device requires only a 2102 (1K x 1 RAM) or equivalent memory IC plus an 8043/8044 or equivalent keyer to provide a program set of four 32-character CW messages. Features include variable pause repeat and automatic "end-of-message" reset.

A unique "instant-start" (non-freerunning) message load system allows easy and accurate message insertion with complete freedom of "pause" and "stop" placement. Additional 2102s can be added for almost unlimited memory storage (message length or quantity).

The 8047 operates from 5 V dc and draws less than 10 mA of current. It is priced at $39.95 in quantities of one. An 8047-1 kit, containing the 8047, sockets, PCB, 2102 memory, and manual, is priced at $69.95.

For additional information, contact *Curtis Electro Devices, Inc., Box 4090, Mountain View CA 94040; (415)-964-3136.*

NEW BUDGET-PRICED POWER SUPPLY FROM STACO

Staco, Incorporated, of Dayton, Ohio, a manufacturer of variable ac voltage controls and dc power supplies for mobile electronic equipment, announces the introduction of a new budget-priced filtered power supply.

Staco's Model FPS-4 Filtered Power Supply provides an economical answer for operating CB radios, stereos, tape decks, and other automotive equipment in the home, shop, or office.

The Model FPS-4 operates on a 120 volt ac, 60 Hz input, and provides 12-volt dc output at 5.5 Amps surge, 4 Amp continuous duty.

The Model FPS-4 features automatic overload and short-circuit protection. The ventilated steel housing is clad with black and white vinyl. Bottom pads are also vinyl covered to prevent scratches or mars on furniture.

Each unit is complete with input power cord, on-off switch, pilot light, and operating instructions. A terminal board on the rear of the unit provides easy-to-make output connections. The Staco Model FPS-4 is backed by a 90-Day Limited Warranty. For more information, contact *Staco, Incorporated, 301 Gaddis Boulevard, Dayton OH 45403.*

NEW VIZ RELAY-PROTECTED 100,000Ω/V VOM IS HALF THE PRICE OF COMPETITIVE UNITS

VIZ Test Instruments Group of VIZ Mfg. Co. has added a new high-quality, moderately-priced VOM to its line of electronic test instruments.

The WV-520B general pur-

Continued on page 73

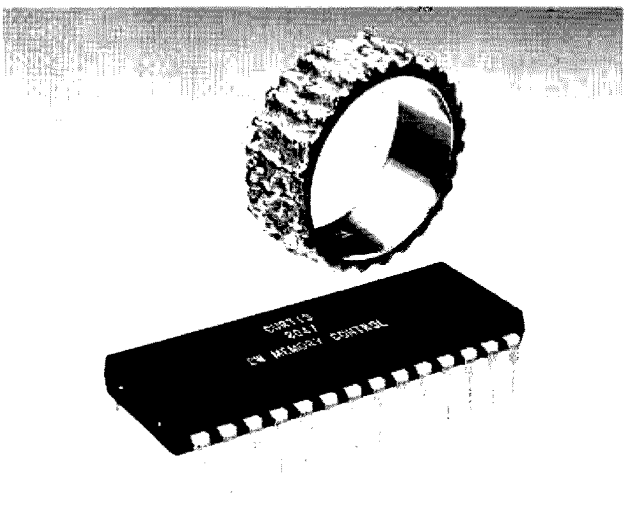

The Curtis 8047 CW message memory.

Staco's FPS-4 power supply.

Don Meredith W6LTV
P.O. Box 3081
Ventura CA 93003

When In Doubt, Improvise!

—adding TT convenience to your HT-144B

After being bitten by the 2m FM bug, I decided the only antidote was to go as inexpensively as possible on the 2m band.

I purchased an HT-144B from VHF Engineering and spent one weekend assembling the kit. The instructions were very explicit and clear. Except for one error (cockpit trouble), the unit performed very well.

Then, of course, the inevitable followed: I *had* to have a telephone touchtone™ pad. After considering a number of possibilities, I finally settled on a unit from Data Signal. The unit was their SME style "C" model with 12 characters.

This unit uses a tactile plastic pad and is very thin. (In fact, it looked so fragile, I considered returning it, as it had no mounting bezel. After writing Data Signal and learning that they wanted a 10% restocking charge, I decided to keep it. I was assured by them that, in spite of its appearance, it was very durable and reliable.)

I tried to use acoustic coupling in my first attempt, but there was considerable distortion present both on the air and on the scope. Rather than rebuild the acoustic coupler (after all, I did want to use the thing before old age set in), I decided to mount the pad directly on the HT-144B.

The instruction sheet accompanying the SME pad suggested mounting it with double-backed polyfoam tape. Being of a more conservative nature, I decided to make a bezel for it and attach it with screws. Besides, I decided, a bezel would make it look more professional and finished.

The bezel I made was laminated from three pieces of one-sixteenth-inch-thick-copper, one-side-glass epoxy board. I fashioned the top layer with twelve cutouts to frame the characters on the pad. This included beveling and rounding the inside edges of each cutout for better appearance and finger comfort when dialing.

The second layer was just a frame which was cut out to just clear the pad within the cutout area. The third piece was also cut out to clear the underside of the pad where the wires from the tone generator board are soldered.

Next, the three pieces were put together temporarily in sequence and clamped. About three-sixteenths of an inch (1.5 mm) in from each edge at the corners, I drilled a hole to just clear a #3 machine screw. After this was done, I stripped off the copper laminate, finish sanded, and cleaned the whole assembly with lacquer thinner. Then I sprayed the front layer and all edges with a flat fast-drying lacquer. (A word of caution here: Clean the unit and spray only in a well-ventilated area, preferably out-of-doors. If you have a packing box that makes a good spray booth, you will avoid the spray getting on unprotected surfaces.) The unit was then disassembled and the pad was placed in the "sandwich." This was reassembled, and all was ready for mounting on the HT.

I chose to wire the generator board to the tactile pad before installing the unit on the HT-144B to facilitate assembly.

The next problem was determining just exactly where there was sufficient clearance for the wiring and generator board inside the HT. After pondering and making a few dry runs, I found I could readily mount the pad just below the speaker and the fastening screws for the HT-144B circuit board. A close inspection revealed that the generator board would snuggle up partially between the HT-144B circuit board and the case with a small amount protruding into the battery area. With this in mind and using the bezel for a pattern, I drilled the holes to mount the assembly; then I made a cutout 1.1 inches (2.8 cm) long and 0.93 inch (2.4 cm) wide in the HT case. This cutout allowed the generator board to be worked through the case to its position inside. (Be sure the cutout is oriented so that the short side is parallel to the long side of the case. Also, I found it prudent to wrap the generator board with a layer of black plastic electrical tape before putting the thing into the unit; this precludes any short circuits.)

After everything was in place, I soldered the leads from the generator board to the transmitter board: black to ground, red to the circuit side of the power switch, and green to the point where the

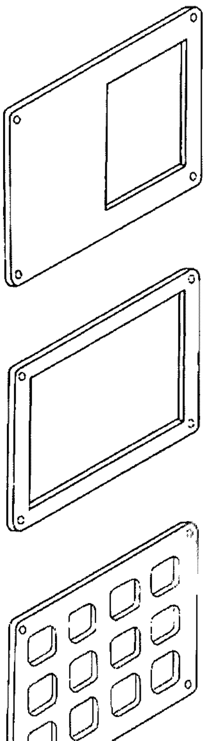

Fig. 1. Exploded view of bezel assembly.

speaker lead runs to the audio IC input coupling capacitor. (In this rig, the speaker doubles as the mike.)

I attempted to dial up the repeater, but it refused to cooperate. Well, old-timers make mistakes, too. Mine was that, since the speaker had only eight Ohms to ground, the impedance was too low for the pad output, and the pad was effectively grounded.

That was the last problem to solve and, since I needed a quick solution, I decided on a mechanical switch.

Now, it just so happened that the good people at S.D. Sales in Dallas had included as a premium with a recent order to me a quantity of miniature SPDT slide switches. They were perfect for the job, so I used one. I drilled mounting holes and made the cutout for the button just above and centered on the dialing pad. Be careful to make sure you bend the lugs of the switch down a bit. If you don't, there's a chance they will short against the assembly inside.

After all the parts were mounted, I removed the speaker lead and the generator board lead from the transmitter board and soldered them to opposite poles of the switch. The common lug of the switch was connected to the audio input coupling capacitor, the point from which the speaker lead had been removed. Then everything was replaced in the HT case.

This lash-up works well, and the only inconvenience is moving the switch from the "listen" position to the "dial" position the three times necessary to use the pad. (I say three times because I always dial up the repeater, switch back to make sure I have a dial tone, switch to "dial," dial the number, and then switch back to "listen.")

Now, if someone will only come up with a logic switch for this application . . . ■

New Products

from page 71

pose 100,000Ω/V dc VOM is fuse- and relay-protected against overload on all ranges and functions. It employs a high-quality, easy-to-read taut-band meter movement with color-coded scales and mirror, and precision resistors are used throughout for long-term stability and accuracy. Its price is $68.00.

The instrument measures dc voltages as low as 1 mV, and up to 1,000 V in eight ranges; ac (rms) from 100 mV to 1,000 V in five ranges; dc current from 0.1 uA to 10 A in seven ranges; resistance from 0.25Ω to 20 megohms in four ranges; and decibels from −20 to +36 dB. It has a special jack that can be used to measure ac current from 0-10 A, and a polarity switch to permit dc measurements without reversing test lead connections.

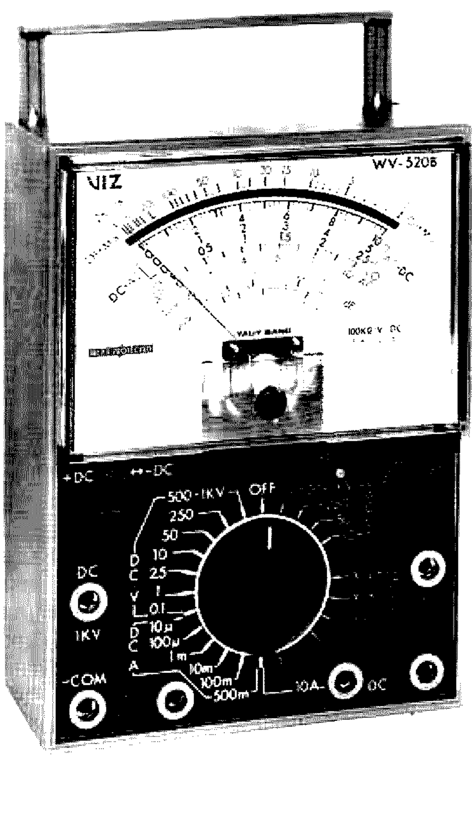

VIZ's relay-protected VOM.

A push-button on the front panel permits rapid reset of the protective relay should the meter be accidentally overloaded.

The VOM's dc voltage, ac voltage, and dc current accuracy is ±3% full-scale. Its rugged light blue ABS plastic case measures 6-5/8" (17 cm) x 5" (12.6 cm) x 2-3/4" (7 cm), and it weighs 1.5 lb (0.69 kg). It is supplied with two test leads, a spare fuse, and an operating manual.

For further information, contact Robert Liska, *VIZ Test Instruments Group, 335 E. Price Street, Philadelphia PA 19144; (215)-844-2626.*

EICO ADDS NEW MODEL 4A4 MULTIMETER TO TRUVOHM LINE

EICO Electronic Instrument Co., Inc., is adding a new multimeter, Model 4A4, to its Truvohm® line of low-cost, high-quality factory-assembled VOMs.

The new multimeter is a 4000 Ohms/volt general-purpose instrument with 17 ranges. The meter measures up to 1000 volts dc and ac, up to 250 mA dc and up to 2 megohms resistance. Accuracy is ±3 percent on dc and ±4 percent on ac. It features a recessed selector switch and an easy-to-read 3-inch meter with mirror-back scale. The movement is diode-protected. A high-impact plastic case is used; it measures 5" by 3½" by 1-7/16". Suggested price of the new Model 4A4 is only $17.95, assembled and complete with batteries and test leads.

The EICO Truvohm line includes a highly sensitive 100k Ohms/volt bench-size multimeter and a clamp-on ac current tester. The line also includes seven other instruments ranging from a simple, inexpensive 1000 Ohms/volt meter to a 20,000 Ohms/volt mirrored-scale meter.

For further details, contact *EICO Electronic Instrument Co., Inc., 108 New South Road, Hicksville NY 11801; (516)-681-9300.*

Ham Help

I am in need of information on adding AM phone capability to a Heath SB-102 transceiver.

David Unkles WA2UIS
Box 212
Mendham NJ 07945

Being a subscriber to your magazine for five years, I feel disappointed in not being able to find any articles on how to build beam antennas for 35, 155, and 454 MHz. I am a monitor buff and would like to increase my listening range, but futile trips to local electronic houses have not produced one magazine that lists charts to build or modify existing products. The *VHF Handbook* only lists amateur beams, with no conversion to go higher or lower. Those commercial beams are out of sight, so perhaps you or one of your readers could supply this info. I would be eternally grateful.

John P. Snyder, Jr.
355 Lackawanna B-8
Reading PA 19601

I have an ASR-32 machine. Could anyone help me find the local loop and convert the machine to operate a TU unit?

I am just getting into RTTY. Any information would be greatly appreciated. Thank you.

Joseph Schwartz K2VGV
43-34 Union Street
Flushing NY 11355

Relief for the Rockbound

—continuous tuning for FM rigs

John F. Sehring WB2EQG
PO Box 306
Oradell NJ 07649

Since tuning the bands has always been a favorite amateur pastime, having your 2 meter FM receiving capabilities "rockbound" can be a frustrating experience. Crystals for each channel would be too costly (not to say impractical), and synthesizers are nice, but costly. "Rolling your own" tunable front end for 2 meters would be a challenge, but . . .

Presented here is a simple modification to add continuous 2 meter receive tuning to FM transceivers (or receivers) presently using crystal control for receive. It is adaptable to most FM equipment, whether tubed or solid state, wide or narrow band, just as long as the unit has a 10.7 MHz i-f frequency at some point in its signal-processing chain. Depending on the particular model involved, this modification may require few or no changes in the existing circuitry and will not alter crystal-control or squelch functions.

A Heathkit GR-98 VHF AM monitor receiver, picked up cheaply at a swap session, will provide the necessary parts for this project. It is solid state with 108 to 136 MHz coverage (in its original form), has a 10.7 MHz AM i-f strip, and has a completely separate shielded tuner, 6:1 vernier, and tuning dial. This tuner uses bipolar devices with tuned rf, mixer, and oscillator stages and has a low-impedance 10.7 MHz output. See Fig. 2 for a GR-88 schematic (similar to the GR-98).

Now, the plan of attack is to modify the tuner to cover 2 meters (with full bandspread), remove it from the donor GR-98 receiver, and use it to inject a 10.7 MHz signal into a suitable point of the transceiver's i-f strip. Thus, the original input frequency of the transceiver is not relevant — just be sure that its i-f frequency is 10.7 MHz (or close to it), as you will be bypassing its original front end. See Fig. 1.

If the GR-98 donor receiver is working at all, it would be easiest to modify the tuner to cover 2 meters before removing it. In case the donor receiver is not working, the following retuning may be done after the tuner is electrically connected to the transceiver. To get the tuner on 2 meters, back off on the tuner's rf, mixer, and oscillator padder capacitors and inductors, T101 and C102 (rf), L101 and C109 (mixer), and L102 and C112 (oscillator). See Fig. 3. A signal source would be helpful, but on-the-air signals will do for rough calibration. To bandspread 145 to 148 MHz over the entire range of the tuning capacitor, remove all but the end rotor plate from each of the three sections of the variable tuning capacitor. Then, readjust the oscillator

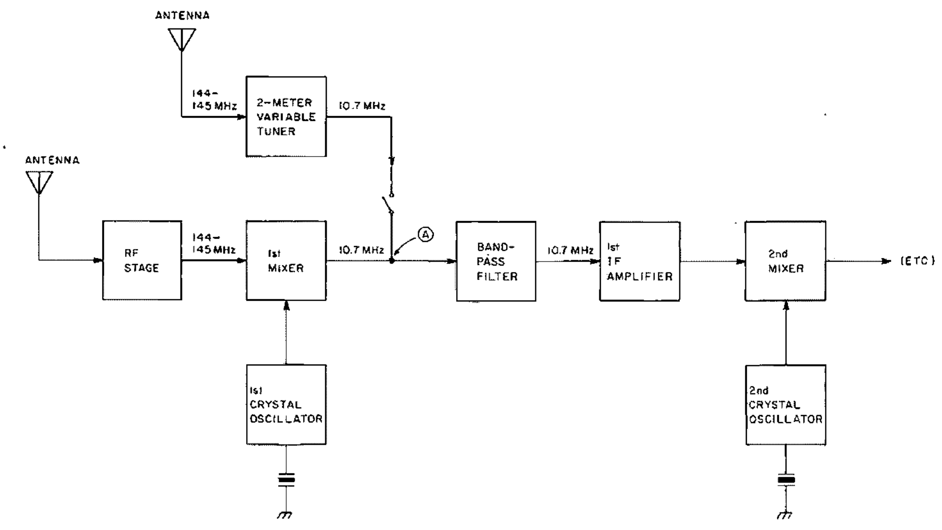

Fig. 1. Block diagram. Typical crystal-control double-conversion FM receiver strip.

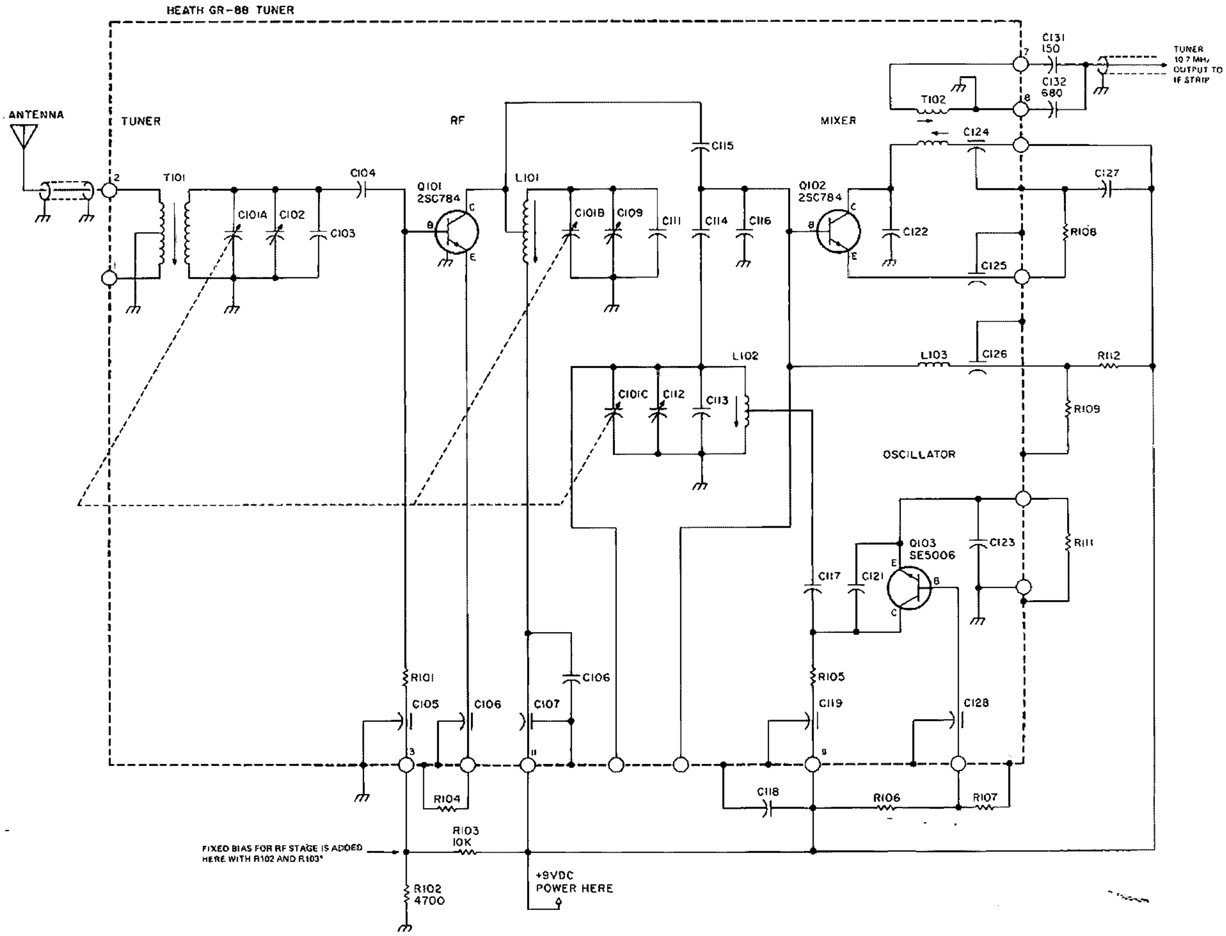

*Fig. 2. Schematic of GR-88 tuner. All resistors and capacitors shown outside of the dotted line and without a value are included with the basic tuner package. *Instead of R102 and R103, a 10k pot could be a sensitivity control.*

with L102 at the low end and C112 at the high end of the band for the exact bandspread you desire. Next, alternately trim T101 and L101 (rf and mixer stages) at the low end of the band and trim C102 and C109 (rf and mixer stages) at the high end of the band until the rf and mixer stages track with the oscillator as well as possible. You may want to knife the rotor plates slightly to obtain even better tracking, but do it carefully — the rotor plates are quite fragile. It's worth the effort to perform these adjustments carefully to achieve best cross-modulation rejection and sensitivity.

To get the tuner operating with the new transceiver, a few simple things need to be done. First, this tuner, being part of an AM receiver, gets agc voltage from its associated AM i-f strip. For FM service, the rf stage should be run at fixed high gain to insure adequate sensitivity and limiting in subsequent stages. Fig. 2 shows how fixed bias can be added using only two resistors, R102 and R103, at point 3. A coaxial antenna connection is made at point 1 or 2. Then install a short piece of low-impedance coaxial cable from the tuner

Parts List

Description	Heath part number	Approximate price
Tuner for GR-98 (108-132 MHz)	110-52	$25.00
6:1 vernier	100-863	$ 2.80
Tuning dial	464-57	$ .70
Tuning knob	462-230	$ 1.90
Tuner mounting bracket (need 2)	204-955	$ .65 each

Available from: Heath Company, Parts Department, Benton Harbor MI 49022, or local Heath retail outlets may have some of these parts and/or can order them for you.

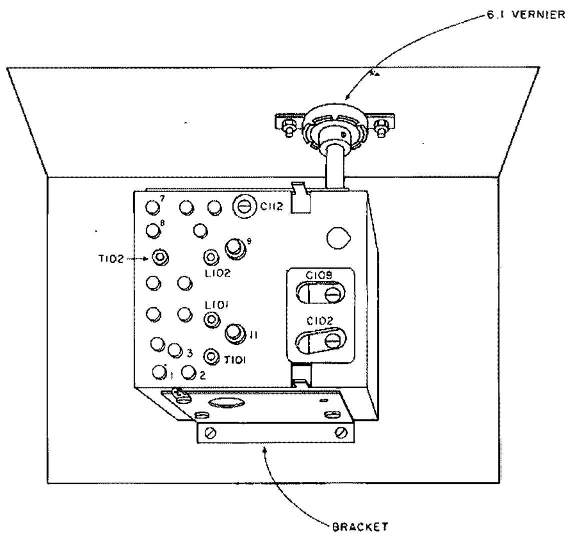

Fig. 3. Plan view of GR-88 tuner.

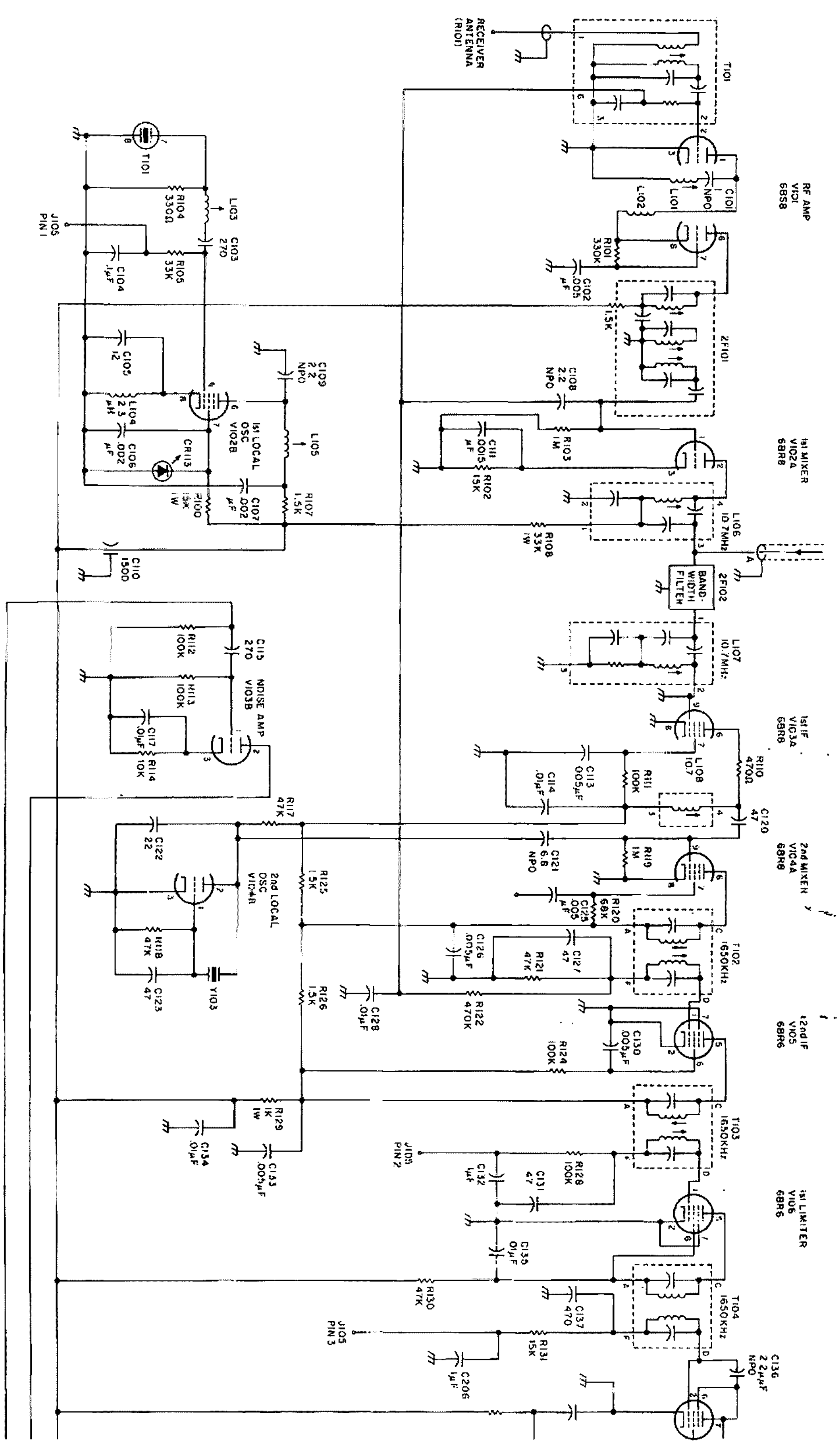

Fig. 4. Partial schematic of Hammarlund FM-50A i-f strip showing injection point.

output, points 7 and 8, to be connected to the transceiver i-f strip. Low-capacitance cable would be best but is not strictly necessary. Last, the tuner will need +9 V dc at point 11, as shown in Fig. 2. This voltage can be supplied from batteries (current drain of the tuner is quite small) or from the transceiver power supply via a zener diode and dropping resistor.

Now, take a particular FM transceiver, in this case a Hammarlund FM-50A – all tubes, double conversion, with a 10.7 MHz first i-f using a 13 kHz bandpass filter. This i-f strip, while not really sophisticated, is reasonably representative of many i-f strips. The idea is to select the best point in its i-f strip to inject the output of the tuner. The point chosen is just after the first mixer plate transformer, at the input to the bandpass filter, point A on Fig. 4. This makes full use of the i-f strip's selectivity, gain, and limiting characteristics. Also, since the output impedance of the tuner is about 50-100 Ohms and the input impedance of the bandpass filter is about 1k Ohm, the tuner output is not loaded down, and plenty of signal is available. One could, however, juggle the values of the capacitors at T102's secondary, C131 and C132, to match more closely the input impedance of the i-f filter or strip used. If you do decide to change the capacitors, remember that the total series capacitance across T102's secondary winding must remain about the same so that T102 continues to resonate at 10.7 MHz.

If you can't find a junked or used GR-98, order the tuner from Heath; see the parts list for details. As mentioned, Heath also manufactures a virtual twin to the GR-98. It is the GR-88 VHF FM monitor receiver. The GR-88 has the same kind of tuner as the GR-98, except for a frequency coverage of 152 to 174 MHz, and has an FM i-f strip. Using the GR-88 tuner might be a satisfactory alternate choice. To cover 2 meters, though, it would be working at the low end of the tuning range instead of the upper end, as with the GR-98 tuner. The conversion would be the same with one exception: After pulling the

variable capacitor rotor plates to achieve enough bandspread, there would not be enough total circuit capacitance in the rf, mixer, and oscillator stages to tune down to 2 meters. Therefore, extra fixed disc ceramic capacitors would have to be added across C103 (rf), C111 (mixer), and C113 (oscillator) to provide more capacitance.

Some final notes: As with any oscillator running at 136 MHz, mechanical rigidity and power supply stability are important for ease of tuning and low drift. I used the matching 6:1 vernier, tuning dial, and brackets that came with the GR-98. It all fits together well and makes for smooth tuning. The tuner is small enough (about 3"W x 3"D x 2"H) to fit inside the Hammarlund case but could more easily have been externally mounted in its own case. To restore crystal receive operation in the Hammarlund, I simply remove the voltage from the tuner and plug the receive crystal back into its socket; something more elegant could be arranged. The tuner's output frequency may be adaptable to 11.5 MHz, but I haven't tried it.

The sensitivity of this combination is quite okay for local work, about 1 uV for 20 dB SNR. Selectivity is mostly dependent on the particular i-f strip and filter used. The Hammarlund can easily separate three strong repeaters spaced on adjacent channels with little problem. Cross-modulation is sometimes a problem from a very local repeater (line of sight from my location). The tuner's tuned rf and mixer stages help minimize such problems, but, with bipolar devices, you can't expect perfection. No images or other spurious responses have been noted. FB QSY on 2! ■

Looking West

from page 16

SMA VS. REPEATER COUNCIL: WHAT'S THE DIFFERENCE?

Since repeaters sit in the same spot day after day, a way had to be found to keep them from interfering with one another. Out of this need was born the concept of voluntary coordination. The end result in many cases was the repeater council. By and large, most councils are political in nature and have the technical aspects of their operation delegated either to an individual or to a committee. The council itself acts as a political voice in the amateur community, letting people know what its area's FMers are doing and why. At times, the political and technical aspects of operation intersect, especially when a council is called upon to mediate a confrontation between two or more systems.

When deregulation came along, FM was suddenly set free to roam and wander like any other mode. Not that it had had any real restraints before. However, with the repeater activity centered in the upper two megahertz of two meters (with the exception of a few isolated places like California, we are addressing a 2 meter question here), very few FMers bothered to wander into the area below 146 MHz. Those who did were the ones with the multi-mode radios, and below 146, their FM operations gave way to SSB, CW, and AM for the most part. Then came deregulation and a new repeater subband from 144.5 to 145.5 MHz. FM was no longer isolated as it had been. Suddenly, it was all over the place—sometimes in places it really didn't belong. It was on top of EME contacts, or atop a DX opening to Hawaii on SSB.

Needless to say, the other spectrum users, a good number of whom had never even bothered to listen to FM above 146 MHz, were more than slightly irked. It was obvious that if the transgression were to continue unchecked, an intermode confrontation would develop. In this case, FM would lose. Solving this potential problem would require the establishment of lines of intercommunication among all spectrum users, for the purpose of working to develop the guidelines and peer pressure necessary to insure the sanctity of all modes and all spectrum users. To do this, the SCRA had to open its structure and give voting rights to all interested parties. When it did, it ceased being a "repeater only" entity. Since it was now concerned with the whole band, it had entered into total spectrum management.

Now that the foundation has been poured, the real work begins. Already, an open dialogue exists with the southern California chapter of Sidewinders On Two, and very shortly the two will begin working together on a large-scale education project aimed at all spectrum users. After all, education and cooperation are the real keys to good use of the two meter spectrum in southern California. This education project will include such things as a guide to overall operations on the band (which will be supplied to all equipment outlets), a taped QST explaining and demonstrating the operation of various modes (to be made available to area repeaters), and formalized two meter band plan (for use in all area repeater directories).

I would like to give credit to three people who are really responsible for the turnaround. If it had not been for them, there is a good chance that what we now have might never have come into existence. First there is Herbert "Pete" Hoover III W6ZH. His speech to the SCRA that we reprinted in this column was the impetus that we needed. Thanks to him, the idea took root and began to grow.

Then there is Bob Thornburg WB6JPI. Bob is a very forward-thinking individual who believes in people. Bob cared, and that helped make it happen.

Finally, it was Art Gentry W6MEP who sold the concept of an open organization with a broad-based voting membership. Had he not come out publicly for it, there is a good chance that it might not have sold.

Thanks in good part to these three gentlemen, the coming of a new ideal in overall spectrum development has become part of the southern California VHF environment. We are lucky to have them.

Ham Help

I need a manual or schematic for a Collins R-389/URR, 15- to 1500-kHz receiver. I also need information on the Rycom 2174A Freq. Selective Voltmeter. Also, I would like to contact people in my area who are interested in the 1575 meter band.

Larry Bearse WA1LGQ
132 Christine Drive
East Hartford CT 06108

I'm looking for either the Hammarlund PRO-200 or HXQ-300 transceiver or any information on these units, i.e., manuals for copying, old ads, etc. They were built about mid-1960, could both operate on 160 through 10 meters, and were rated at 300 Watts input on SSB.

Rick Markey WB3CFG
157 Weidman St.
Lebanon PA 17042

I have been an amateur radio operator for almost thirty years. During this time, I have had an E. M. Sargent multiband receiver, Model 31, serial number 3019, in good working condition.

Does anyone know the value this receiver would have, either historically or as an antique? I would appreciate hearing from anyone who knows something about the assessment of this receiver.

William Stradley WØBHK
8450 West Vassar Dr.
Lakewood CO 80227

I will pay for an original, or copy, of a schematic diagram for an Eldico SSB-1000 or SSB-1000F kilowatt linear amplifier. The oscilloscope in this 1958 vintage unit is not working properly, and I would like to have the schematic before attempting to repair it. Thanks for any help.

Steve Zahos WB2UNH
128 Tomcyn Dr.
Williamsville NY 14221

I need information on the Olivetti TE300 terminal. I am specifically interested in a service manual for the keyboard/printer unit, ideally with electrical information. A wiring diagram for the power supply unit would also be helpful, but I would appreciate any information. Thank you.

Charles Boelens
7311 Coronado Dr.
Burnaby, B.C.
Canada V5A 1P9

Rodney L. Burt
Box 8128
Boise ID 83707

Power Supply Magic

—the forgotten voltage doubler

If you are anything like me, you have at one time or another found yourself in the middle of a very interesting IC project with a board or two full of nice easy-to-use TTL logic parts with a few discretes and the usual complement of resistors and capacitors. Everything is going just fine, and your tally sheet, on the side that you should use to keep track of power supply requirements, is showing a single 5-volt supply running up to about 2.5 Amps. You think to yourself with a smile that here is the perfect place to use that "super zapper" 12.6 volt c-t at 99 Amps transformer that you have hidden at the back of the junk box. It is a real monster with a single secondary and all kinds of reserve for future expansion to the system.

All of a sudden, here comes a subsection to your design that you could accomplish with one moderately-priced MOS/LSI chip instead of 27 TTL packages and 920 assorted resistors and capacitors. The only problem is that it requires three voltages from the power supply you have already designed with just one output—specifically, plus 5, minus 5, and minus 12. The two minus voltages are both at quite low current, such as 50 mA each.

You are now faced with the decision of how to obtain these new power requirements. There are a number of ways to go, and each has its own specific advantages and pitfalls.

The first one which might logically fall to mind would be to use a transformer with a higher output voltage and then divide it down from this level to obtain the various outputs that you need. This approach would be fine if the higher voltages required higher current levels, but, unfortunately, this is not the case here. If you set an upper level of approximately 12 volts and then regulate it down to 5 volts for your TTL logic devices, you would have to use a series-pass transistor or other regulating scheme capable of dissipating 21 Watts for a 3-Amp supply plus a safety margin. This is fine if you want to spend the money, but I don't care to spend the money, and neither do I care to have that much heat floating around inside my otherwise very neat package. You also have to consider here that, since the two minus voltages are at very low current relative to the plus 5 current level, you are effectively wasting the capacity of half of the power transformer. In this day and age of energy conservation and awareness, this just won't do!

The next idea to arrive in the logical route of design choices is the use of a power transformer with multiple secondary windings. Now, if you have had occasion to check the prices on this method lately, you will dismiss the thought just as quickly as I did. I am sure there are those of you out there who will jump up and say, "Why not rewind your own transformer?" This is a perfectly acceptable solution, if you are adept at this sort of thing. But, once again speaking for myself, the last time I got involved with one of these projects, after several days of fighting 9 miles of stiff and kink-prone wire, I was wishing that I could get my hands on the guy who wrote the article about "Winding Your Own Transformers For Fun and Profit."

Another method would be to just add a second transformer for the exclusive use of these two minus voltage levels. I would argue against this idea solely on the basis of the cost of the transformer and all the other miscellaneous parts necessary for this method.

As you may have guessed after reading this far, I have a design to provide all the needed levels for this project which, in my not-so-humble opinion, shoots all these other ideas full of holes. In a way, it could be considered almost something for nothing.

It is based on a circuit which will be familiar to most hams who have been around long enough to have worked with tube circuits. In this modern day and age of transistors and ICs, with their low voltages and high currents, it has fallen into disuse. I am speaking of the voltage doubler, although, when I get done with it, you might not recognize it at first glance.

I believe that, at this point, a bit of background

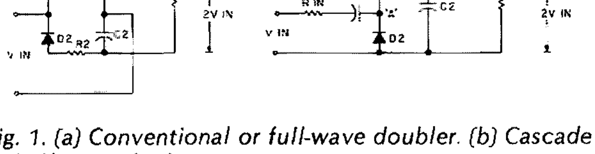

Fig. 1. (a) Conventional or full-wave doubler. (b) Cascade or half-wave doubler.

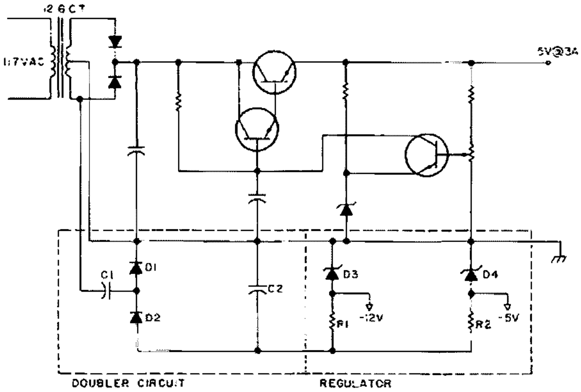

Fig. 2.

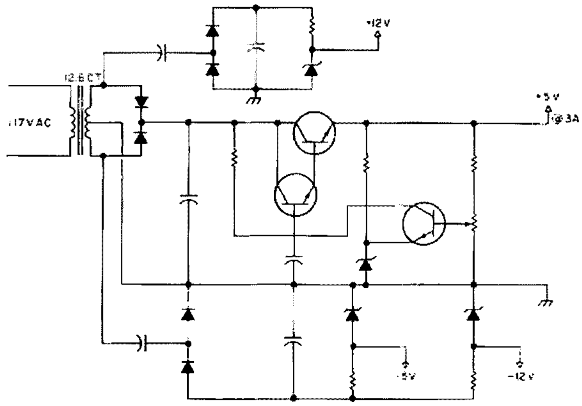

Fig. 3.

on the internal functions of the voltage doubler circuit itself would be in order.

Fig. 1 shows two common voltage doubler circuits. In Fig. 1(a) is the conventional full-wave doubler, and in Fig. 1(b) is the cascade or half-wave doubler circuit. Each of these circuits offers the same advantages or disadvantages as its namesake in the standard rectifier circuit. The full-wave doubler offers higher average output in both current and voltage, depending on the load applied to it, and requires less filtering. The half-wave circuit uses fewer parts but does require much heavier filtering to achieve a similar output.

For the needs in this application, the half-wave circuit has one major feature which dictates its use. It has a common input and output side that can be grounded for a reference to the main power supply.

To understand how a voltage doubler operates, please consider Fig. 1(b). The voltage of this supply is taken across capacitor C2, which is charged on alternate half cycles. When the input is in its negative half cycle, D2 conducts and charges capacitor C1 to the peak input voltage. On the next half cycle of input, the input signal reverses polarity and is now in series with the voltage across C1. The voltage at point "a" is now equal to E_{in} plus Vc, or twice the peak input voltage. Diode D1 now conducts and charges capacitor C2 to this higher voltage. The output voltage of the doubler is already partially filtered, due to the presence of the charged capacitor across the output terminals. This filtering should be quite adequate for most uses for which you might consider this circuit, but there is no reason why you could not provide more filtering or even some sort of regulating circuitry. It should be mentioned that the output voltage of a voltage doubler circuit is quite load dependent and neither the full-wave nor the half-wave circuit provides much in the way of self-regulation.

There is nothing really critical in the selection of parts for use in a doubler, except that I would definitely recommend the use of very good high-quality capacitors, since they must carry the total load current continuously. I have not come across any set formulas for calculating the size of these capacitors. In the days of tube usage, it was common to use 40 to 50 uF for C1 and C2, but I have found in my development of the circuit I am about to describe that values of 220 uF have provided adequate current levels. The working voltage of the capacitors should be at least twice the input voltage for C2 plus a safety margin, while C1 can be specified for use at the input voltage. Since the circuit is capacitively loaded, you must also use diodes of good quality because they will see relatively high surges. I would never consider using anything less than something in the 1N4001 series with their 1-Amp continuous rating and correspondingly higher surge rating. The resistances shown in Figs. 1(a) and 1(b) are basically there to simulate the source resistances from the transformer and diodes, although you could insert some surge limiting resistance if desired.

Up to this point, I have been speaking of a type of circuit which will give a positive output with respect to common line. However, at the start of this article, the problem was that I needed two negative voltages. As simple as it may seem, I can do this by taking the basic cascade or half-wave doubler circuit and reversing the polarity of everything.

The details of this procedure are shown in Fig. 2. This is the schematic of a power supply that I have used with considerable success in a number of projects which have been custom made at my company. The upper 5-volt section is quite conventional, with an NPN series-pass transistor driven by another NPN transistor set up as a "differential amp." A number of articles have been written regarding this type of circuit, so I will not go into it in detail, except to say that this particular one uses a 2N3055 for the series-pass transistor, and I draw a continuous 3 Amps from it without any problems. I do, however, have a hefty heat sink mounted for the 2N3055. Proper selection of the transformer, diodes, series-pass transistor, and heat sink would allow you to draw almost any current level you might desire.

The lower section is the one to be more concerned with. If you will compare it to Fig. 1(b), you will see the similarity. It is the mirror image of the half-wave doubling circuit and, as a result, provides a negative output. You can connect the input to the doubler to either side of the transformer secondary, but just be sure you connect it in front of the rectifiers for the other section of the power supply. The actual voltage on the more negative end of C2 will depend

on the secondary voltage of the transformer you choose to use, but you can essentially assume that the unloaded voltage at this point will be 2 V_{in} peak (i.e., rated secondary voltage × 1.414). I have added the two zener regulators to this negative voltage to obtain the two levels necessary to supply the MOS/LSI chip. At very low current levels (10-15 mA or less), there is no need for a filter capacitor on these regulated voltages. However, if you wish to draw more current, they would most likely be necessary. If you understood the previous explanation of the mechanics of a voltage doubler circuit, you should be able to see the workings of this circuit with very little study.

To expand on the possibilities of this type of circuit, look at Fig. 3. Here you have a power supply which provides 5 volts at high current levels, minus 5 and minus 12 for the MOS/LSI devices, and also plus and minus 12 volts to power an operational amplifier. This circuit is very well suited for use with low-power operational amplifiers because, even though the output has rather high ripple levels, most low-power op amps have a very high power supply ripple rejection capability. All this from a transformer with a single 12.6 volt secondary. How simple and efficient can you get? To me, the word efficiency is one of the most important things to consider with this method.

Should you require higher voltages, you could easily employ higher orders of voltage multiplication as long as they have a common input and output. However, I would recommend that you spend a little time "in the books" before you attempt these levels so that you understand what you can and can't do. Two publications I highly recommend are *Voltage Regulator Handbook* from National Semiconductor and *DC Power Supply Handbook* from Hewlett-Packard. The first I have seen advertised for sale in some of the ads in this magazine, while, for the second, you might have to try and make friends with some engineer so you could beg, borrow, or steal his copy. There may also be others among *73*'s publications from which you could gain further information on the subject. Many libraries have a small section on electronics, and you might be fortunate enough to find something there.

You could build this supply with almost any type of construction practice with which you are comfortable. I generally lay out a small printed circuit board to fit what space I have available which holds all parts except the transformer and the series-pass transistor, which is mounted on its own heat sink or, in some cases, sinked to the chassis. In supplies providing lower power levels, I have even been known to mount the power transistor right on the board in a small heat sink. If you do this, you must watch that the temperature of the device will not rise high enough to damage the board itself or cause problems with some of the other parts on the PC board.

I have used this circuit or variations of it in several hundred devices manufactured by my company over the last 5 years without any problems whatsoever. Within the limitations outlined previously regarding power capabilities and ripple, the circuit will do an excellent job for you.■

CONTESTS

from page 15

Isls.; OZ—Denmark; SJ/SK/SL/SM—Sweden. Not all of these prefixes are geographically in Scandinavia, but they are considered so for the contest. Operating classes include: single operator, multi-operator/single xmtr, and multi-operator/multi-xmtr. Club stations, even if operated by only one operator, are in the multi-operator class. Multi-operator/multi-xmtr entries are to use separate series of serial numbers for each band. Only allband entries are allowed.

EXCHANGE:

RST and serial number starting from 001, transmitted as a five or six digit sequence.

SCORING:

European stations count 1 point for each complete QSO on any band. Non-European stations count 1 point per QSO for each complete contest QSO on 20, 15, or 10 meters, and 3 points per QSO on 80 and 40 meters. Count each call area in the above mentioned countries on each band as a multiplier, e.g., LA1 = LB1 = LJ1 and SM3 = SK3 = SL3. A portable station in Norway or Denmark counts as the tenth call area there, e.g., W4XXX/OZ counts for OZØ and G4XYZ/LA counts for LAØ. SJ9 is the 9th call area in Sweden. OHØ is the 10th call area in Finland, and OJØ is a separate call area. Some countries have no geographical call areas, but count as if they had. The final score is the sum of all complete QSO points from all bands multiplied by the sum of all multipliers from all bands.

AWARDS:

Certificates will be awarded to the highest scoring station in each operating class on both CW and phone in each participating country as well as in each USA call area, reasonable score provided. Depending on the number of contestants in each country, the Contest Committee will consider more certificates.

ENTRIES:

Contest logs are to be filled in in the following order: date/time in GMT, station worked, sent/received message, multiplier, and points. Separate logs for each band and CW/phone are recommended. On the summary sheet the contestant will write his/her callsign, name, address, the final result, and the operating class, along with a signature that he/she fully agrees to the rules. The logs must not be mailed later than October 15th and should be sent to: EDR Contest Manager, Leif Ottosen OZ1LO, Bankevejen 12, Kong, 4750 Lundby, Denmark.

DELTA QSO PARTY

Starts: 1800 GMT September 23
Ends: 2400 GMT September 24

All amateurs are invited to participate in the ninth annual event sponsored by the Delta Division of the ARRL. There are no time or power restrictions. Amateurs outside of the Delta Division will attempt to contact as many amateurs inside of the Delta Division (Ark.-La.-Miss.-Tenn.) as possible. Delta Division amateurs will attempt to contact as many amateurs as possible both inside and outside of the Delta Division. Stations may be worked on each band and mode. Portables may be reworked on the same band/mode if they change counties. DX stations may be worked by Delta Division stations, but do not count as multipliers.

EXCHANGE:

QSO number, RST, and QTH: ARRL section for non-Delta Division, county and state for Delta Division.

FREQUENCIES:

CW—3550, 7050, 14050, 21050, 28050; SSB—3990, 7290, 14290, 21390, 28590; Novice—3725, 7125, 21125, 28125.

SCORING:

Delta Division score number of QSOs times number of ARRL sections (75 max.). Outside division score number of QSOs times number of counties worked (316 max.).

AWARDS:

Delta Achievement Award to all amateurs contacting 5 different stations in each of the 4 states comprising the Division. Section award certificates to the 3 highest scoring stations in each state in the Delta Division. Fourth and fifth place awards if warranted. Section award certificates to the high scoring stations in each ARRL section and country outside of the Division. Second and third if warranted. Plaque will be awarded to the highest scoring station both inside and outside of the Division. Plaques will also be awarded to the high scoring portable and mobile stations operating in the Division. A portable or mobile station is here defined as a station operating outside of his home

Continued on page 85

DVM Scrapbook

—the basics

Gary McClellan
Box 2085
La Habra CA 90631

Quite a few people are unaware that digital voltmeters can be very useful to them, and quite a few others think that DVMs are good for nothing but digital multimeters. I am going to do something about those notions in this article!

But before I get started showing you how to use digital voltmeters, let's take a quick look at the advantages of the DVM, and, to be honest, a few disadvantages, too. DVMs are rapidly being incorporated into electronic equipment as replacements for conventional analog-type meters. They are far more than "window dressing," as they give a bright unambiguous reading that is hard to ignore. This feature makes them great in places where the public has to read them. Have you seen a digital gas pump or cash register yet? And DVMs will be seen in even more places as prices decrease. DVMs (and many other digital instruments for that matter) do have one serious disadvantage: It is hard to spot trends by the readout. By this I mean that, supposing you are monitoring the level of a slowly emptying water tank, watching the slowly changing readout is hard. But science has come to the rescue with analog bar graph displays that solve that problem!

Let's take a quick look inside a typical digital voltmeter, for example, the Gary McClellan and Co. model 101 DVM kit. Actually, this kit is for a digital panel meter, or DPM for short. DPMs are the building blocks of modern

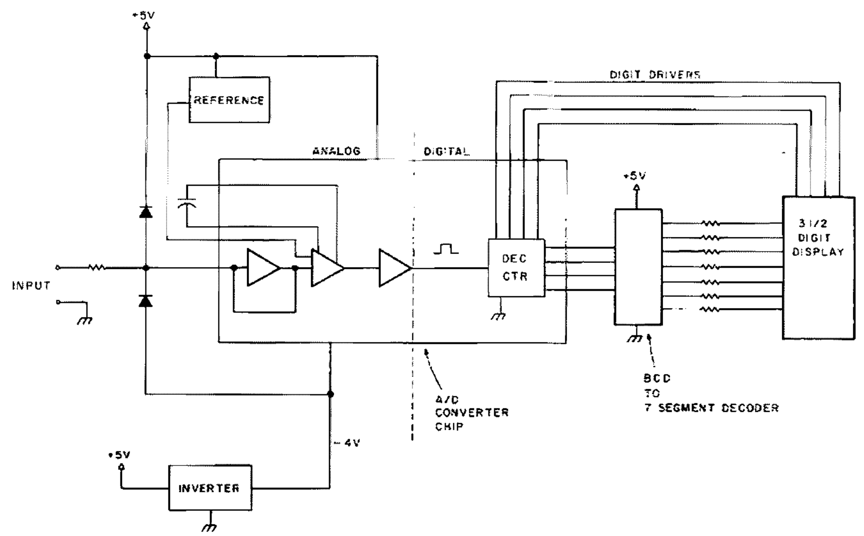

Fig. 1. Block diagram of the model 101 DVM kit. This is a typical modern DVM circuit. The A/D converter is a Motorola MC-14433 IC chip. Only the basics are shown here.

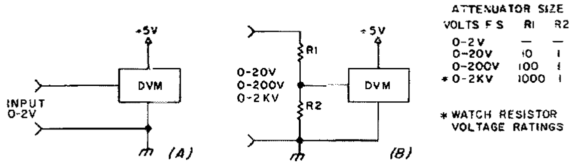

Fig. 2. DVM hookup schemes. A shows the direct connection for a 0-1.999 voltmeter (0-2 volts, for short). B shows some basic attenuators for higher voltages.

equipment, and they usually replace analog meters directly with only a source of power needed to run the unit. The model 101 is shown in the block diagram of Fig. 1. As you can see, this digital voltmeter is a marriage of analog circuitry and digital circuitry. This is true of all digital voltmeters. This unit has the bulk of the circuitry on a single IC chip, and that makes a difference. In fact, this unit has only two other IC chips – one drives the display, and the other acts as an inverter, changing the 5-volt power into minus 4 volts for the internal op amps on the DVM chip.

This DVM kit uses the dual slope method of converting an analog signal into a digital one. This is the standard method of signal conversion, and, since it features high accuracy at low cost, it is used everywhere. Basic operation is something like this: The first step is for all op amps to be zeroed and the digital counter section (which drives the display) reset. Then any positive input voltage (the one you want to measure) is compared with the reference voltage (did you notice the reference block in Fig. 1?), and the ratio of these two voltages is converted into a stream of digital pulses. The pulses are counted up and displayed as voltage. Next, any negative voltage you may apply is compared to the reference; then the ratio is counted and displayed as voltage, like before. In the final step, everything is zeroed out and the process repeats itself. These steps are controlled by a built-in digital timer, a necessary feature of the dual slope voltmeter. I've left out a lot of the theory to keep this section painless, but you should have an idea of how the dual slope system works in its basic form.

The quickest and easiest use for DVMs is as a simple dc voltmeter. Fig. 2 shows a typical hookup. If you are like most people, you will want to measure more than the 0 to 2 volt scales these meters measure, so you will need an attenuator as shown. You can use precision resistors for the values shown; Radio Shack and others have offered a resistor pack that will give close values (hopefully). Anyhow, it's worth looking into. If you don't need the 10-meg input impedance of the divider shown, you can use other values of resistors. Let's assume that you are measuring the output of a 0 to 20-volt power supply. Just pick two resistor values that come close to make the 10 to 1 voltage divider you need. You can probably use something like 166k for R1 and 16k for R2 with no problem. The calibration control on the meter will adjust for this. In fact, I did just this trick in the power supply featured in the original MC-1405 DVM article and it worked like a charm! The only real restrictions you should worry about are that the resistors must be precision wire-wound or film type and you must not use values so low that you load down the circuitry you measure.

Another use for a dc voltmeter is in communications gear. How about a digital plate voltage meter? Or how about a digital circuit checker in a communications rack (say a 2 meter repeater)? Perhaps someday soon all quality communications gear will have some sort of circuit tester built in. Wait and see! If you wish to build that classy digital plate voltage meter, the job is pretty simple. Find out what voltages you will be measuring and plan the attenuator accordingly. Suppose you want to measure 1 kV full scale in your linear. That means you must provide 1.000 volt or so to the meter. You need an attenuator of 1000 to 1, of course, and Fig. 2 shows some suggested values. Some important tips: For safety, always run the meter common at chassis ground potential. This will mean safer operation for the meter. If its power supply transformer arced to ground, the DVM could be damaged. Also, use several high-value precision resistors in series; many precisions have 500-volt ratings. Of course, you will have an easier time finding lower values to put in series. After you install the meter, you may want to add a switch so you can measure other voltages. The amplifier bias voltages are good candidates; just select an appropriate R1 for your application. Note: The MC-1405 DVM will not measure negative voltages, so keep this in mind if you build this DVM.

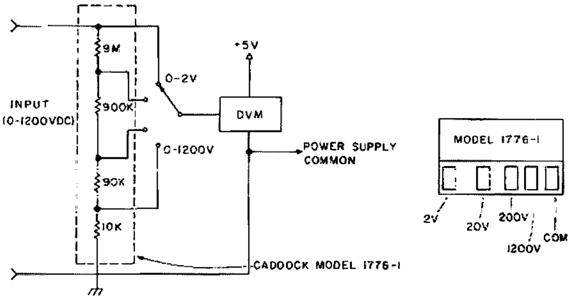

Fig. 3. A full-blown attenuator scheme, like those used in commercial digital multimeters. Note that the ranges are 0-2 volts, 0-20 volts, 0-200 volts, and 0-1200 volts.

Moving along further, you might want a multiple-range dc digital voltmeter for the lab. Fig. 3 shows how to do it. The easiest and best way I have found to tackle a multi-range attenuator is to buy a commercial resistor network. You get all the tough-to-get resistor values in a single package, and it's ready to go – just add a switch! The attenuator shown in Fig. 3 will measure 0-2 volts, 0-20 volts, 0-200 volts, and 0-1200 volts. The reason the top range is 1200 volts and not 2000 volts is due to the voltage limitations of the resistor. This part is made by Caddock Electronics[1] and the part number is 1776-1. You can also get it from me, as well as a switch, for $12.95 plus $1.50 postage and handling. Since this price is about the same as theirs ($12.00), you can get both parts and save money. Or, if you prefer, you

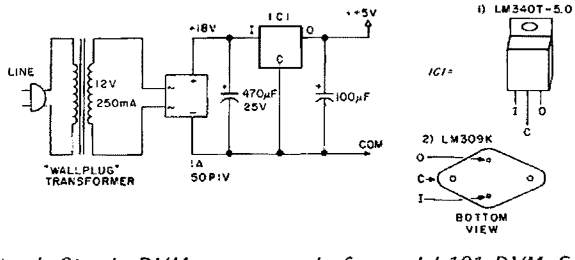

Fig. 4. Simple DVM power supply for model 101 DVM. See text for MC-1405 power supply.

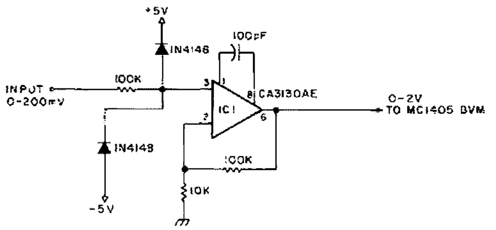

Fig. 5. 10x amplifier for 0 to 1.999 mV reading on the MC-1405 DVM.

can get 0.1% resistors in the values shown from Mepco-Electra and others.

Here are a few other uses for a dc voltmeter: Why not attach a permanent magnet dc motor and make a digital tachometer? Or rig up a photocell pickup for a more accurate noncontact tach. How about a simple digital thermometer? These DVMs will read the output of a thermocouple directly on a 200 mV input range. You can check circuitry for destructive "hot spots," check heat sinks, appliances around the home, and much more. Now surely you can think up more uses than that!

A few words about powering your voltmeter! Always use a separate power supply to run it. The one shown in Fig. 4 will do nicely. Don't be tempted to tap power from the circuit you are going to measure; the DVM may inject noise back into the supply through the power leads. I even used a separate source of power on my Heath lab supply. It paid off in a quite dc output. Look for an extra transformer winding in your equipment of at least 6 volts or more at around 100 mA. If you have one (the Heath supply did), you can eliminate the expensive power transformer shown in Fig. 4.

After you have the meter running, calibration is in order. Simply measure the high voltage, power supply output, or whatever with a digital multimeter of known accuracy. Then adjust the pot in the 101 DVM until the readings jibe. If you built the MC-1405 DVM, the procedure is the same, but you must zero it before you adjust the calibration. Do this with zero output voltage from the equipment your meter is built into, tweak the zero adjust, and apply power. Adjust the MC-1405 calibration pot until both meters agree, and you are all set.

These two DVMs have the potential for being far more

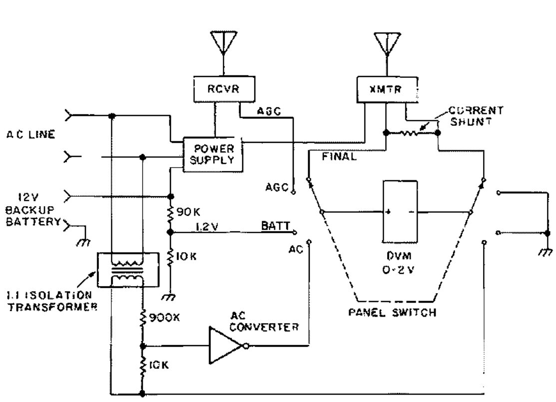

Fig. 7. Super repeater "checker-outer" checks critical voltages and current in repeaters. You should use a 1:1 isolation transformer in the front of the ac line to check the circuit for safety.

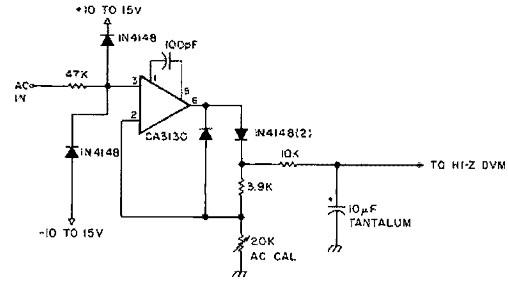

Fig. 6. Simple high-quality ac converter. Circuit from Motorola MC-14433 application notes.

accurate (like about ±0.03% typical short term) on a single range than many low-cost digital multimeters around, so get the best meter you can find to do your calibration. By "low cost," I mean the $89.95, 3-digit, 1% accurate TV service-type digital multimeters.

If you would like a 0 to 199.9 mV scale on your DVM for measuring gadgets like thermocouples and the like, the conversion to these meters is easy. On the MC-1405 voltmeter, rewire the input buffer to a 10x noninverting amplifier, as shown in Fig. 5. I would suggest that, if you have the MC-1405 DVM, you use RCA CA-3130AE mini-DIP op amps in place of the LM-308s used in the original unit. The MOSFET op amps have far higher input impedances and they drop in the same socket. If you are working with the model 101 DVM, simply change R4 from 470k to 27k and recalibrate the unit for 199.9 mV full scale. This job takes only minutes.

There's another good reason for converting your meter to 0 to 199.9 mV full scale. If you plan to add current shunts, you should use this range. Why? To minimize something called "insertion loss" or, in other words, the voltage drop across the current shunt. If you lose too much voltage in the shunt, you can cause problems in the circuit you are trying to test and goof up your current readings. Play it wise and use the 199.9 mV scale if you can.

Sometimes it is desirable to read ac volts with your basic dc-type DVM. All you need is an ac converter. Fig. 6 shows the details. You might also want to use the circuit in any digital multimeter designs you are working on, as this is a pretty good circuit. Accuracy is typically better than 0.2% at 60 Hz. Response is good from 30 Hz to over 5 kHz. To my knowledge, this is the first time anyone has published a decent ac converter circuit. This circuit converts 0-to 1.999 volts effective value ac to 0 to 1.999 volts dc. For higher voltages, use the same attenuator shown in Fig. 2. Build this circuit on a piece of ground-plane (PC with perforated copper on one side) perfboard or on a well laid out PC board. Keep all leads short and shield the input leads, as hum pickup comes easily in a circuit as high impedance as this. This ac converter is useful for current measurements, too, as it works well at low voltage levels.

So what can you do with an ac voltmeter? You can build a power line monitor. That's a rather gimmicky project, to be sure, but you could build it into a piece of equipment to check critical line voltages. You would probably want to combine other functions (such as dc volts and current) with this circuit. Fig. 7 shows the culmination of this idea. It's a complete electronic "checker-outer" for a piece of equip-

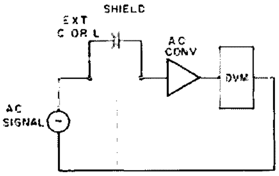

Fig. 8. Simple C or L meter. The signal source is ideally from a constant amplitude signal generator, but a filament transformer will work.

ment such as a 2 meter repeater or you name it. As shown, you can check line voltage, battery backup voltage, current consumption from ac battery, agc check, and final collector current. If this tester were located in a remote repeater station, the selector switch would be remote controlled, and the readout would be converted to audio and "read out" at a distant location. Does this give anyone any ideas? How about a computer "handshake" system?

Another use for ac volts is in capacitance/inductance meters. I am offering this idea as is because I haven't tried it. If you do, be sure to carefully shield ac input from the 60 Hz source, to reduce hum pickup. And try to use a stable ac signal source. A couple of op amps would work for this, and you can use frequencies such as 60 Hz and 1 kHz, which are popular in LC bridges. Fig. 8 shows the details.

I saved the current measuring techniques for last because they can use all the stuff just mentioned. Fig. 9 shows how current is measured. Just use Ohm's Law to get the shunt(s) that you need. I didn't really have to make many comments about current measurement, but I will repeat that you should use the 199.9 mV meter range here. You can cut some slack and use the 1.999-volt range in some applications, such as with tubes, but this isn't always the case. A few comments about the resistors you use: All resistors have tempcos, or, in other words, they change resistance with temperature. So the moral is, don't heat them up. Calculate the wattage with full-scale current and use a resistor of 10x or better this value. If you wind your own resistor with wire, be careful to use very heavy wire or, better yet, resistance wire. One of the worst current shunts I ever made was a 0.1-Ohm resistor made out of #18 wire. The tempco was so bad it easily showed up on an analog meter. Commercial resistor wire is made of nichrome or similar wire and has a better tempco.

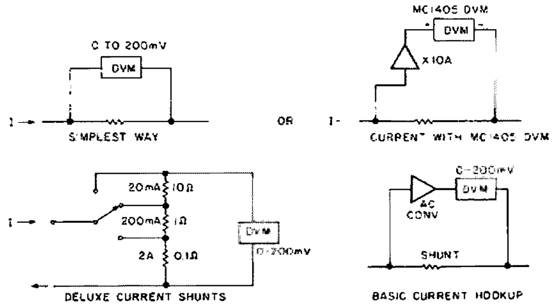

Fig. 9. Current measuring techniques.

I hope these circuits can be of use to you. Stay tuned for some more applications for the DVM kits. The next ones will be more specific in nature, and perhaps more useful. If you have any questions and you write, please enclose an SASE or I'll send a ton of sales literature! ■

Reference

1. Caddock Electronics, 3127 Chicago Ave., Riverside CA 92507.

CONTESTS

from page 80

county for the purpose of operating in the Delta QSO Party. A plaque will also be awarded to the high scoring Delta Division Club station. No limit to the number of operators or transmitters; however, all QSOs must be made from the same location. The Lafayette (LA) ARC will sponsor the plaques.

ENTRIES:

Logs must include date/time, station worked, exchange, band, emission, and multiplier. Logs must be postmarked no later than October 21st to be eligible for award consideration. Logs will be returned if requested. Send logs to Malcolm P. Keown W5RUB, 213 Moonmist, Vicksburg MI 39180.

ROCKY MOUNTAIN DIVISION QSO PARTY

Contest Periods:
2000 GMT September 30 to 0600 GMT October 1
2000 GMT October 1 to 0200 GMT October 2

Call will be CQ de RM on CW or "from Rocky Mountain" on phone. Non-Rocky Mountain stations should refrain from calling CQ! A station may be worked once per band regardless of mode.

EXCHANGE:

Non-Rocky Mountain stations send consecutive serial number and section; foreign stations send RST and serial number. In-division stations send serial number, county, and section.

FREQUENCIES:

3560, 7060, 14060, 21060, 28060, 3920, 7230, 14280, 21360, 28560.

SCORING:

SSB QSOs are one point, while CW QSOs are two points each. Out-of-division stations multiply QSO points by the number of counties. Stations within the division multiply QSO points by the sum of division counties, sections, and foreign countries worked.

AWARDS:

A certificate will be awarded to the highest scoring station in each ARRL section, provided a minimum of ten QSOs have been made, and each foreign country. Second place will be awarded where noteworthy score warrants. A certificate will be awarded to the high scorer within each division, county, and state. County hoppers, defined as stations operating from three or more counties, are eligible for county awards and for certification as high scoring county hopper in the division. Division multi-operator stations are eligible only for certification as division high multi-operator. A plaque will be awarded to the highest scoring single operator station within the division and outside the division.

ENTRIES:

Logs must have county of operation clearly marked; county hoppers should indicate separate county totals as well as a grand total. All logs must be postmarked by October 30th and sent to: Bill Wageman, 35 San Juan, Los Alamos NM 87544 (with an SASE if contest results are desired). By entering, one agrees that all decisions of the contest committee will be accepted as final.

MISS AMERICA STATION

Station K2BR will be operating from the Miss America Pageant, Atlantic City NJ, from September 1 through 10, 1978. Approximate frequencies: CW—3555, 7055, 14055, 21055; phone—3935, 7235, 14280, 21380; Novice—3730, 7130, 21130. QSL to K2BR. Sponsor: Southern Counties Amateur Radio Association (SCARA).

THE NEW JERSEY ALL COUNTY AWARD (NJAC)

Sponsored by the Jersey Shore Amateur Radio Society, this new award is offered for working NJ counties on any band as follows: seven counties for the certificate, and endorsements for each additional seven counties (for a total of 21 counties). Send log information plus $1.00 and two 5¢ stamps to: Wally Eichorn K2CYX, 105 Seaside Place, Sea Girt NJ 08750.

Jim Hagedon K8YQH/AA8P
Miami Valley F.M. Association
1340 Brainard Woods Drive
Dayton OH 45459

Meet Mr. Blizzard

—*Dayton hams were ready*

National Guard Medivac helicopter prepares to land at National Guard armory near Dayton. This was one of several Guard units used to rescue stranded motorists and farm families in the Ohio area.

If you had asked a dozen hams living in the Illinois, Indiana, and Ohio area to define a blizzard on Wednesday, January 25, 1978, you probably would have been hard pressed to get a good answer. By noon the next day, however, that problem would have no longer existed—they were living through one!

The weather authorities say that this was the worst winter storm to hit the area since we began keeping records in the late 1800s. In Dayton, new records were set for lowest barometric pressure (28.66 in.), highest winds (68 mph), and most snow in a 24-hour period (12 in.), all accompanied by subzero temperatures. This, indeed, was a blizzard.

For the next 24 hours, virtually nothing that didn't have four-wheel drive could move in the region.

An area newspaper was headlined "Ohio Closed," and that probably summed it up best of all.

It was daylight Thursday morning before the full impact of the storm began to sink in. Due to the loss of electric power in large areas and the anticipated need to shelter stranded travelers, a massive relief effort was going to be required. Before these efforts were concluded, thousands of amateurs throughout the area would be involved in making the operation a success.

In the greater Dayton area alone, nearly 300 amateurs worked in around-the-clock shifts for four days, assisting the Red Cross in setting up and stocking shelters, dispatching four-wheel drive vehicles on rescue and transport missions, and handling health and welfare traffic to all parts of the country.

The majority of the communications were handled through the Miami Valley F.M. Association WR8ACV repeater systems on .04-.64 and .31-.91. The .04-.64 machine primarily functioned as a link for Red Cross shelter operations and was directed from a station at their headquarters in downtown Dayton.

The .31-.91 machine handled the bulk of the four-wheel drive vehicle dispatching, which was directed from a command post at the Centerville Police Department south of the city. A second station on .31-.91 at Red Cross coordinated their requests with the Centerville group.

Health and welfare traffic was routed locally through the Dayton Amateur Radio Association WR8ADP repeater on .34-.94 to several HF stations working the traffic nets. The D.A.R.A. machine also provided overflow

Where's all your radio gear? That's what National Guard officers aked Stu K8ST when he and a Red Cross volunteer set up an emergency fuel-oil distribution system out of National Guard headquarters. The HT was all Stu needed to maintain contact with the Guard tank truck over a two-county area.

Roger W8LHL plants a two meter magnet-mount antenna on the roof of a four-wheel drive Blazer at Red Cross headquarters in Dayton. This was one of countless volunteer vehicles that were used to deliver food and supplies to shelters and otherwise inaccessible homes in the snowbound Miami Valley area.

capacity when the two primary machines were fully loaded.

The biggest problem faced by the amateur volunteers was simply getting to where they were needed. In some areas, amateurs living near shelters were picked up and transported by city or county snowplows. By late Thursday, satellite shelter communications had been established with Phillips-

Rick WB8WMY prepares to help a young man with an emergency supply of fuel oil for his family. Rick was one of a number of hams who rode the National Guard tank truck and helped with the oil deliveries, sometimes making as many as eight trips a distance of a quarter of a mile on foot to deliver the fuel.

burg, Brookville, Xenia, Englewood, Union, and Bellbrook.

Another serious problem was telephone service. By midmorning on Thursday, several telephone exchanges were so overloaded with either real or imagined emergencies that it became almost impossible to get a call through.

A similar problem existed on the Citizens Band channels. The local REACT group did a superb job of trying to help stranded motorists by dispatching CB-equipped four-wheel drive vehicles, but the QRM was unbelievable. Channel 9 sounded like channel 19 during rush hour.

By midday Thursday, the appeals broadcast by local radio and TV stations for four-wheel drive volunteers to report to Red Cross and area hospitals began to pay off. Several area auto dealers volunteered their four-wheel drive inventories to police and fire departments, and we began to team up hams with four-wheel drive operators.

Dispatches to transport nurses and doctors to and from area hospitals became commonplace. Many trips were made delivering prescription drugs and food to homes where these items were in critically short supply.

On Friday morning, the wind and snow began to subside, but road conditions had actually worsened from the day before. To relieve the radio traffic load at the Red Cross, the command post at the Centerville Police Department was established and coordinated with area hospitals to handle personnel shift changes. This operation continued through the afternoon of Saturday, the 28th, by which time most of the roads were at least passable for normal passenger cars.

During the day on Friday, the Red Cross operation took on added functions, as food and fuel-oil supplies began to run short in homes that were still cut off. Food deliveries in amateur-radio-equipped vehicles began on Friday and carried on through Sunday, the 29th. On Sunday, a separate fuel-oil delivery program was initiated using a National Guard tank truck dispatched by amateur radio from Guard headquarters. This service continued through the middle of the following week.

In retrospect, one of the most impressive aspects of the snow emergency was the high level of preparedness and adaptability displayed by amateur radio. Portable antennas and cigarette-lighter power plugs were in evidence everywhere, which made equipping four-wheel drive vehicles and National Guard trucks with two meter equipment relatively easy.

Rarely was there a lack of qualified volunteer radio operators. Indeed, the hardest problem at times was convincing some of them to get some sleep. Radio procedures were generally excellent, with short transmissions and rapid acknowledgements the rule rather than the exception.

The technical capabilities of the repeater systems really paid off, as well. Following the Xenia, Ohio, tornado in 1974, the need for a more reliable, better-coverage repeater system for the Dayton area became evident, and a system was designed. With the financial assistance of several local foundations and many hours of work by a dedicated technical committee, the system was installed and received its first real test under emergency conditions during the blizzard.

The machines performed flawlessly. With their saturation coverage of the two-county area of responsibility, hand-held portables and low-power mobiles were able to be used with an absolute minimum amount of time being spent on setup and installation.

Taken together, the combination of trained, willing amateur radio operators, flexible, properly-operating equipment, and a good, reliable repeater system was unbeatable for this situation. None of us had ever trained for an emergency like this—few would ever have expected a situation like this to occur. When the time came, though, the pieces fell into place, and ham radio went to work for the good of the community.

As one of my friends in the local REACT organization later told me, "I was listening on my police monitor, and you guys really sound professional. You sounded like you do that every day." That's about the nicest compliment I can think of.■

Jerrold A. Swank W8HXR
657 Willabar Drive
Washington Court House OH 43160

The Blizzard of '78

—a real snow job

At 2:00 am EST on January 26, 1978, the wind began to blow and the snow began to streak across the landscape, causing a whiteout that would do credit to an Antarctic winter storm. At 3:30 am, the furnace blower stopped and we lost our heat. The power had gone off all over Washington Court House. The loss of power knocked out both my two meter transceiver and the local 87/27 repeater.

Luckily, the power came back on in our section of the city at 8:30 am. Soon after that, I received a call from Paul Woods, the Deputy Director of the Disaster Services Agency, asking that I alert the ham radio emergency network. Since I am both the Disaster Services Agency Communications Officer and the newly-appointed Fayette County Emergency Coordinator, it was my job to get the amateurs together. Although there had been no real advance planning, I made a call on the repeater for volunteers. The results were immediate and exciting. Many local hams had promptly gone to the repeater frequency. It was practically instant mobilization.

Eventually, twenty-six amateurs took part in our operation. We had a use for each of them — it certainly was a gratifying response.

Last year, the DSA director had depended on CBers, with very poor results. The emergency channel (9) was deluged with calls for the sheriff, and the other channels were loaded with people discussing the storm. High-powered amplifiers used by CBers in a nearby town on channel 10 caused so much adjacent channel interference that attempts to relay calls for help through CBers out of town failed. I had told him that next time I would show him what ham radio could do.

I asked first for someone to go to the DSA headquarters to set up a unit for communication with mobile units, as well as for quick connection with the office (since its line was also swamped with calls). To get in, I first had to wait several minutes for a dial tone, and then I would get a busy signal and have to start all over. The office could not call out, either. (The deep, drifted snow made it impossible for the telephone company to install lines, as had been done last year.)

Art Swadner WB8EEB said that he would go if someone would pick him up. Only four-wheel-drive vehicles could get through in most cases.

Since none of the DSA rescue people were hams, we had to have a mobile operator with each driver. Frank Johnson WD8OLN put about 300 pounds of old generators and radio equipment in the back of his Ford station wagon for ballast, and went after Art. He also volunteered for a mobile job, and even used his own car. Another volunteer, Mark Workman WB8TYC, needed transportation, so Frank picked him up. Bill Burns WA8IEJ also used his own car, and Mike Gray WA8HNS, Jim Turner WB8FTL, and Gary McCoy WD8LPK all became mobile operators to ride with the DSA rescue units.

The mobile units were designated DSA #1, DSA #2, and so on, so that the director, who was not a ham, would not have to remember ham calls. The mobiles indentified with both their call and with their DSA unit number. They handled more than fifty trips, either to bring in people or to take others medicine, food, or even fuel oil.

Jack McKirgan II WD8BNC handled messages via repeater relays for surrounding cities; there were about seventy-six messages handled.

I handled the telephone calls, and several Novices monitored channel 9 on the CB and called me for the phone calls to the sheriff. They also monitored our repeater on scanners, since they could not work two meter FM. This scanner/CB receiver method worked very well. I replied via 2 meters and they returned the channel

9 call with the information that they were going to be helped by either the sheriff or a wrecker, as the need appeared.

I had to dial the sheriff up to ten times to get a line. Each time, there was a wait of several minutes for a dial tone.

While we had offers of snowmobiles, the experience of last year taught us that they had limited usefulness. With a driver and a communicator, there was no room for evacuating people, and the intense windchill factor, due not only to the natural wind but also to the high speed of the snowmobiles, made it necessary that all occupants be warmly dressed. The four-wheel-drive vehicle is the real workhorse.

I averaged about four calls an hour, for over forty hours, and all this with only two hours sleep in the first twenty-four. This totalled more than one hundred sixty calls.

Gerald Ragland WA8BOB is a pharmacist at the local hospital, Fayette County Memorial. He was very active in the net, and also had to arrange for 3000 pounds of I.V. solution to be delivered from Dayton. The hospital administrator was so impressed with the smooth operation of the amateurs that the hospital is purchasing a two meter FM unit for future use, so that there will always be a unit there for emergencies.

Al Dixson WB8SRN also served at DSA headquarters, eventually being relieved by Jack McKirgan II WD8BNG. They were so pleased with Al Dixson that they have asked him to become a member of DSA. He has also been appointed Assistant Emergency Coordinator. He enjoyed being of service so much that it renewed his lagging interest in ham radio.

We did not, as some cities did, operate as a controlled net. Having everything funneled through net control may be necessary for large groups, but for a small one (26 active hams in the net), it would have been too slow.

Each ham did what he could do best, and all monitored the repeater. Several also were monitoring channel 9, and some were periodically reporting to other repeaters to get road and weather conditions. There are about a dozen repeaters in our range.

Each one knew at all times the entire story. I could drop out for lunch and someone would take my place until I came back. We notified the local radio station that messages for surrounding cities could be transmitted by telephoning Frank Johnson's number. He then gave them to Jack McKirgan II and they were passed on. We took no incoming health and welfare messages.

We learned a lot as we went along. For example, not to expect any road information from the sheriff or the state patrol, but to call the highway department. They plow and salt the roads, and know exactly what conditions are. We also realized the importance of having backup batteries for the 2 meter gear and the repeater, so that they are not "dead" when the power goes off. Extra flashlight batteries and a kerosene lamp or lantern should also be kept handy.

If you have an emergency generator, or anything else, be sure it is where you can get it. One ham had an emergency generator in his garage, but the garage door was drifted shut and so was his house door.

One ham lost his sixty-foot tower (which blew over), and his triband beam fell across the power line to his house. As a further irony, all his gear was away at the manufacturer's being serviced. All he had left was his phone. Even his 40 meter vee came down with the tower.

We were fortunate that Phil Brooks WD8DPI, who is a minister at the Grace Methodist Church, also had 2 meter FM available. He handled all the coordination of getting blankets, food, and other supplies, and arranging for the influx of stranded people who had to leave their cars in snowdrifts on the interstate. Four other churches cooperated, and the Red Cross furnished food orders when needed.

There were no messages received by us directly from CBers. The ones who were calling on channel 9 did not know at any time that they were being received by hams. The credit therefore went to the CBers, but both we and the CBers knew better.

The only time CB was used at all in any useful manner that we knew about was when a woman called the Red Cross here from Kansas City and wanted to know the whereabouts of her trucker husband, who had been bringing a load to a plastics company here and had not reported in some hours. I told the Red Cross that I would not undertake such a search with ham radio, but would turn it over to a CB club. I did this, and I heard several hours later that they finally located him at a motel.

Some people were even playing music on channel 9, but since most of this type of operation was in the city, we were able to have our outlying monitors copy calls. By contrast, in Wilmington, Ohio, 22 miles away, a REACT team operated with perfect discipline, and channel 9 was silent except for emergency calls. If you have such a well-operated CB group in your area, it would be well to make contact — otherwise, forget it.

There is great satisfaction in handling an emergency well, and it brings new pride in being a ham. Don't plan for any certain type of emergency. Everyone here thought that the most likely catastrophe was a tornado, after Xenia got hit. Then last year we had very low temperatures and freezing water pipes were a problem, as well as homes without heat and fuel. Still, one could get around, even to the grocery. Then this year a different type of storm hit. It was just plain snow — 26" of it, with high winds to blow it into drifts. No one could move. We could not even get to our car in the carport because of neck-high snow drifts. All roads into town were completely blocked. Snowplows bogged down and went into the ditch. If you didn't have something in your house, you did without it.

Even though our operation went smoothly, we are determined that the next emergency, with more planning, will involve more amateurs. We must have battery backup power for all the receivers, and must have a plan that will allow for efficient operation of our increased coverage and for helping other counties if they need help. We would like to be able to use CB units more effectively, and we would like for interested CBers to see how the ham system works. We also need a call-up system, in case the emergency is not as obvious to all as the snowfall was.

For experience, the Great Blizzard of '78 sure beat a Simulated Emergency Test.■

Alexander MacLean WA2SUT/NNN0ZVB
18 Indian Spring Trail
Denville NJ 07834

How Do You Use ICs?

—part X

First, what is an ac clock circuit? It's a circuit that gives you a timing pulse keyed to the 60-cycle ac line frequency. This is accurate enough for many purposes, including, surprisingly enough, a number of the digital clock kits that are available.

The circuit performs one very important function. The ac line frequency is a 60-cycle sine wave. The digital circuitry runs on square-wave pulses.

Woe to the circuit that dumps sine waves into digital. They object. So there has to be a nice little circuit that will turn your sine wave into a digital signal.

I usually like to start off articles with examples of how easy it is just to steal the circuit you want from someone else's piece of equipment and use it for your own. Unfortunately, going through a number of back issues, I did not come across any line-frequency circuits published recently, so I will have to start off cold.

There was one type of ac circuit, though, which was quite common, and a simple method of designing this will be described.

There are two specific things the circuit must do to make the line frequency compatible with digital ICs. It has to convert it to a suitable voltage level, and it has to fool the digital ICs into thinking that it is a digital signal. This takes two different operations, each one of which is very simple. Refer to Fig. 1, which is the basic circuit.

There are many places in the equipment where you may be able to steal the ac voltage. The usual place is from an unused filament winding on the power transformer. You may even be able to couple it from the rectifier winding with a capacitor.

You do not need much current for the job — just an ac signal of sufficient voltage and no more. That is the function of R1. This may be a potentiometer, as shown, or two fixed resistors, or a combination of both. It depends on what voltages you have and what parts you may have.

The total resistance is a function of Ohm's Law. The only critical part is that the resistance should be high enough so that it does not draw appreciable current. A figure of five to ten mA would be a good start. Measure the available ac and figure the total resistance for current appropriate to the ratings of the resistors.

The next part is a little more tricky. You need the correct signal voltage to switch the 7400 gate. A look in a data book will give you a hint.

According to the data, you need a minimum of 2 volts to switch to high and less than 0.8 volts to go to low.[1] The maximum input voltage is listed as 5.5 volts. This gives you a ball-park figure, but it doesn't help all that much. That is a square-wave voltage, not the sine wave your meter is calibrated for. There is a simple way out, though.

That is how you get the voltage. Fig. 1 has a plain ordinary rectifier in the circuit. The output of the half-wave rectifier looks considerably like the pulse that it wants to a digital IC. Fig. 2 shows its waveform. Notice that it goes from zero to maximum and back again. The IC doesn't care that it hits zero instead of some low voltage state. It looks the same to the IC.

This makes it easier. Your meter will read a voltage even though it is not correctly calibrated. Simply start at no voltage from the resistor rectifier network and slowly increase the voltage to the rectifier until the IC starts pulsing. You can see it on a scope or a logic probe, or even on a meter. There will be a change in the voltage when the IC starts to pulse.

Go slowly and note the point at which the action starts. Then measure the voltage to the input to the IC. This will be in the few-volt range. Note the reading and then increase the voltage until you read ten or twenty percent more. This should give you some margin to take care of voltage variations.

As a final check, see that the new voltage is not too close to the stated maximum. It shouldn't be; mine wasn't. Then check again for correct switching action. If all is okay, you should be in business. The extra gate section

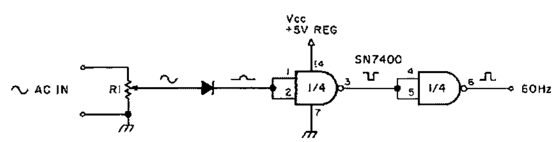

Fig. 1. Basic 60-Hz-sine-wave-to-60-Hz-square-wave circuit.

buffer is common in such circuits.

That is the simplest way to do it. When I was experimenting, I tried a few zener diodes in the circuit as the rectifier and to regulate the voltage. According to my meter, it didn't make all that much difference. The voltage across the diode never did reach its reference voltage. It did appear to have some smoothing effect when the voltage was increased, but it did not seem to be a significant factor in the circuit. Nor did it make much difference which way the diode was hooked up with either type of rectifier. It could be reversed or used with the diode across the IC instead of in series.

As long as the IC got the voltage, it appeared to work properly. For simple equipment, if I were going to use such a circuit, I would not bother with a more complex arrangement. I would try the simple way and see how it worked.

However, simple though this is, it does appear to be the hard way to do things. There ought to be some clever little gizmo that you can feed an ac signal into one side of so that a digital signal will pop out the other.

There is. It is called a Schmitt trigger. Its function is to turn an ac signal into a proper square wave, and it does a smoother job of it than the simple circuit.

Here we are blessed with a surplus of riches. There is not just one such device, but two – the SN7413 and the SN7414. There are some differences between them, but they can be easily fudged. The 7413 is really a dual 4-input NAND Schmitt trigger. The 7414 is simpler (Fig. 3) – just one input pin and one output pin. There are, however, six of them in the package, which is a lot of Schmitt triggers to play with.

The 7413 is a bit of a maverick. It is shown as a NAND gate with a Schmitt trigger following that and a NAND gate output stage. There is a Schmitt trigger in there somewhere, though. How you hook it up depends on how strong your stomach is.

From the pictorial (Fig. 4), it would look like the resistor rectifier combination should be used to feed it so that the NAND gate got a digital signal of sorts. I recollect that, when I was using them on the bench, I fed the sine wave directly to the input and got the square wave output just the same. My inclination would be to use the rectifier anyway, and just rely on the Schmitt trigger part for good smoothing of the output pulse. That way you get the best of both.

You can tie all four inputs together as you would with the unused inputs of the 7400, or you can tie the three unneeded inputs to the Vcc pin through a common 1000-Ohm resistor. Just remember that you will have to do something to account for all the inputs.

You determine the input voltage needed in the same way you do for the other devices, starting from zero and working your way up until the circuit works.

Often an extra NAND gate section of another IC is used

Fig. 2. Half-wave rectifier waveform.

as an output buffer for the 60-cycle stage in a fully built piece of gear. What comes after that? Usually two more simple stages (more if needed). A divide-by-six stage followed by a divide-by-ten stage[2] will give you a one-second pulse (Fig. 5). More divide-by-ten stages can be added if needed for slower timebases.

There is a limiting factor to this circuit. It is so simple that you would think that everyone would want to add it to equipment because it is so easy, so there have to be some drawbacks.

One drawback is its frequency accuracy. The accuracy is only as good as the accuracy of the timebase, which in this case is the incoming ac line frequency. This is a nominal 0.05%. That sounds pretty good when you are just measuring a few seconds or so, but as you increase the time and start measuring fractions, you get problems.

To make it easy, think in terms of frequency. At 1000 Hz, 0.05% is not so bad – only 0.5 Hz. What's half a cycle to most audio use? At 10 MHz, it becomes 5000 Hz or 5 kHz, and, at 30 MHz, it becomes 15 kHz. When you hit the UHF frequencies, it Hertz even worse.

That's why you don't see too many frequency counters around with ac clock timebases. Even when you are measuring time, when you dig down into the microseconds, the accuracy is just not there.

There is one other common complaint with this circuit – ac line glitches. A glitch is not one specific problem, but a class of them.

They are the digital equivalent of gremlins. In this case, it is any extraneous pulse that manages to get in through the ac line. Machinery starting up in the area, stray electrical pulses, or static and lightning discharges, among other things, can cause a pulse on the ac voltage. This will come right in on the line and probably get right through the transformer primary and appear at the secondary.

The digital ICs are very sensitive and will happily follow any little pulse they see. This can give you a timing pulse that is out of time or phase with the 60-cycle frequency you want to establish. This actually is not that much of a problem with the counter-type circuit. It keeps updating its reading, and a stray counting error will be corrected at the next counting period.

However, in its normal usage, as the timing pulse for a digital clock, you have another problem. Once the timing error gets in, it stays in. There is no way the circuit can correct itself. That is why you see so many clock kits with crystal timebases and so many surplus crystal units giving 60-cycle output.

While the accuracy is much greater with the crystal unit than the ac line fre-

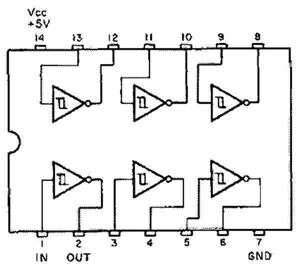

Fig. 3. SN7414 hex Schmitt trigger.

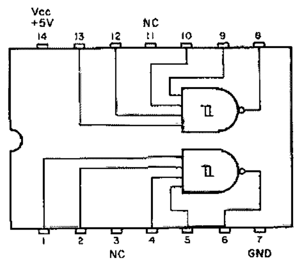

Fig. 4. SN7413 dual 4-input NAND Schmitt trigger.

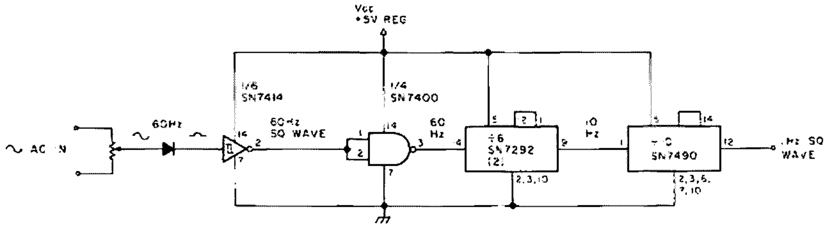

Fig. 5. 60 Hz ac timing chain.

quency, for most applications, the primary reason the crystal timebase is used is not for its accuracy but to divorce the timebase from the ac line, thus getting rid of the major source of timing error, the notorious glitch.

However, if all you want is a quick way to tell the time, or you need a quick and easy timing circuit, the ac line frequency timebase is hard to beat.

My recommendation would be the rectifier and 7414 combination with a 7400 buffer or an additional 7414 section buffer. That should be about the most reliable simple combination. ■

References

1. *TTL Data Book*, National (Radio Shack), February, 1976.
2. "How Do You Use ICs? – part III," MacLean, *73 Magazine*, November, 1976, p. 106.

LETTERS

from page 11

was the founder of International, and at one time held the amateur license W5EMH. He had not been active in amateur radio for the past several years.

Mr. Freeland was a pioneer in the manufacture of precision quartz crystals and frequency-measuring equipment. International was the first company in the United States to market a Citizens Band transceiver. The electronics industry would be put to task to find a person with a greater dedication to quality in manufacturing.

International will continue its operation in his tradition. Mr. Freeland's son, Royden WB5KDC, will be active in the company.

Bill G. Moore K5HTF
Russellville AR

GOVERNMENT BS?

Tell them all to go to hell—I like your way of thinking. I agree with your thoughts on government BS.

If I want to drive at 100 mph, I do so, as I have a 1971 Ranchero with a 375 HP Cobra engine which will do the job and I am not dead yet. I feel that the government has made these stupid regulations for the idiots that either cannot or will not learn about the safety rules of driving, and I feel that if they cannot drive safely, take away their driving privileges, not mine.

As far as this radar thing is concerned, the State of California is considering letting the CHP have radar. If they do, I shall proceed to purchase or build (ha) a receiver and then I will know where they are. I do not believe in jamming, but it is our privilege to receive. See you on 20.

Terry Downey W6TD
Bishop CA

SHOP AROUND

Okay, Wayne, this is in response to your request on working DX without going broke. I agree with Mr. Todd WB5SYP (June, 1978, issue) that ham gear today is beyond the reach of most of us. I, until recently, have been using a DX-60B Heath transmitter, a DX-150A Realistic receiver, and an old Johnson T-R switch with a low-pass filter. Total cost of this station is $230.00, including coax and a home brew 40 meter antenna. This setup has served me quite well and I have worked DX on many occasions. Almost all of the gear was acquired from want ads, hamfests, and local club activities. The whole trick is to *barter*, a term that is not dead. Of course, most of the operation here is CW and you will be quite surprised how long a conversation you can hold with 40 Watts output power. Remember one thing when working DX: Listen. Too many people on the bands today call CQ DX and then don't listen around. The art of patient listening was how I made my first QSO after passing my General test. It was with OY3H and he was using 100 Watts of power. There was a person next to me calling CQ continuously. Too much, in fact, to realize OY3H was there. However, after hearing me call and converse with OY3H just a few kHz away, he was next in line in the pileup that ensued after my QSO. What a feeling it is to answer a CQ from a semi-rare DX contact with only a few Watts and then sit back and chuckle at everybody else falling over each other trying to work the same station I had. In summary, there is quite a lot of good used gear around. You have to spend the time to survey your prospective gear and then barter for a satisfactory price. Don't tie yourself down to only one type of brand name gear. Shop around, that's the name of the game. Good things come to those who have patience.

Curtis D. Law WA2PIV/2
New Haven CT

TOO BAD?

A friend of mine left me the June issue of *73* to read because of the antenna info and, like a nut, I could not resist flipping through it. As always, I see that you have not changed in your attacks on the ARRL. Don't you ever get tired of writing about *QST* in *73*? Poor *73* cries like a second-rate cousin about her big sister, *QST*. I will admit to a passing weakness in looking at June's issue of *73*, but since you haven't changed and never will, I will continue to read about *QST* in *QST*, not *73*. You can keep your CB fans and gay advertisement for nets and your eternal gripes about the best ham organization (ARRL) around today. I can't figure out what keeps *73* afloat, except some people like to read articles that are critical of others. You are so hung up on the ARRL and *QST* that you have ruined what might have been a good mag, but it's too late now. Too bad. The ARRL haunts you like a bad dream that will not go away. By the way, you are right about one thing. Your attitude doesn't sell mags—it turns hams off.

Wayne Brandon WB5HMB
Garland TX

WARNING

The new regulations concerning linear amplifiers make me wonder if somebody slipped something in the FCC water coolers. It really makes good sense to clobber hams in the name of cracking down on illegal CBers. Suppose hams were getting on the 550-1600 kHz band—would the FCC ban the sale of broadcast band equipment? Probably! Why, they could carry that further—if drugs are smuggled into the country by plane, why not ban the sale of aircraft capable of international flights? Or maybe just the sale of suitcases.

While the heavy thinkers at the FCC were thinking up how to dump on hams, I took the Novice code test in early March. The 610 went in, but the written test didn't arrive until the end of April—weeks after I passed the General class exam on April 5th. After 10 weeks of waiting for my call letters, I called the FCC and was told to be patient—it could be another 8-12 weeks! Out of curiosity, I called my congressman (Rep. Stangland). His office discovered that my file was on "hold" and would remain there until action on my previous application (for Novice) was taken!! If his office had not called, I would have waited for months with nothing happening! Please warn other would-be hams. Another week and I would have wished I had put a CB between channel 40 and the

Continued on page 104

William S. Hornbaker WA4TJJ
5204 Penelope Lane
Knoxville TN 37918

Relax and Unwind

—*your antenna wire*

With few exceptions, almost everyone up till now has experienced the curse of kinks in copperweld antenna wire. Number 14 gauge copperweld consists of a steel core and an integral copper jacket, approximately 30 percent copper by weight. As the wire is drawn down to size, it becomes work-hardened and springy. When wound into the fifty-foot continuously connected coils in which it is stocked and sold, it is in a stressed state. Do not remove the ties from a fifty-foot coil and let it drop unless you wish to be confronted with a minor demon in the form of a tangle of wire which is most difficult to tame (Amen!—ed).

An interesting experiment was once performed by an electrician friend who carefully tied one end of two fifty-foot coils to a power pole in his backyard and carefully unrolled the one hundred feet of copperweld which he attached to the bumper of his car. He then let the car roll a short distance down the sloping driveway to "stretch and straighten" the wire, when it suddenly snapped at the bumper and wrapped itself around the pole in an impossible mess. He cut the wire into short lengths, disposed of them in the trash, and went to his supplier for more wire.

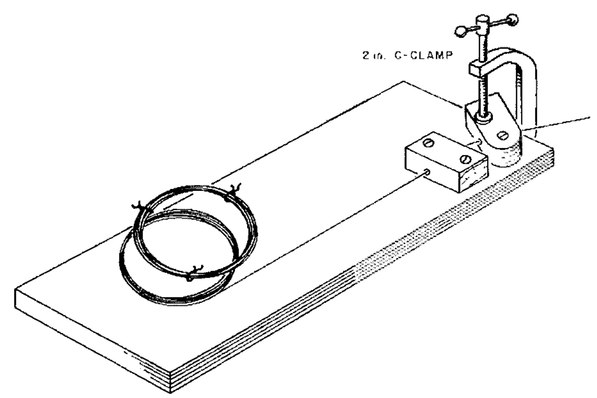

Fig. 1. Wire straightener construction: base—1/2″ or 3/4″ plywood; guide blocks—1″ × 1″ × 2″ pine. Nail or screw to base.

By following the instructions given below, you can unroll and straighten copperweld so that an antenna can be strung without the kinks, snarls, and uncouth comments commonly associated with the devilish stuff. To accomplish this minor miracle, proceed as follows:

1. Determine the length needed and purchase (or cut off) sufficient fifty-foot coils for the job at hand.
2. Hold one coil securely so that the many turns cannot flip out of the plane of the coil, and remove all of the ties from that one coil.
3. Carefully permit the coil to relax and expand in your hands, with assistance as required, until the stored stress is relieved.
4. Retie the relaxed and expanded coil.
5. Repeat steps 2, 3, and 4 for each coil.
6. Make a simple wire straightener from scrap wood as shown in Fig. 1. The guide holes are just big enough to pass the wire. One block is fixed and the other is pivoted on one screw and then clamped when properly adjusted.
7. Place the coils as shown. Insert a short length of wire from the bottom coil through the guide holes, and then remove the ties from the bottom coil.
8. Pull about three feet of wire through the straightener device, making necessary adjustments to the movable block.
9. Tie the end of the wire to a solid anchor point, such as a tree, post, or antenna mast, and back away in such a manner that you control the rotation of the coils and keep them flat against the board.

You should now have your copperweld lying across the yard with only a slight waviness—provided your adjustment was correct. The straightener works by bending the wire in the opposite direction from that in which it was coiled, just enough to leave the wire in a reasonably straight condition. Now you can get on with the routine business of putting up your antenna with manageable ease. ■

Nuclear Attack!

—WWIII on your SR-52

Dan Everhart WA7WKA
293 Lander Hall
University of Washington
Seattle WA 98105

Uh-oh, here's another violent and destructive computer game. And it uses nuclear weapons, yet, in this age of detente. I'll bet Texas Instruments never dreamed that their SR-52 would be used to stage World War III battles. Read on, and see how to make yourself a world power! If you don't like the game, at least you may pick up a couple of interesting programming tricks for the SR-52.

The game itself is a new twist on the old "sub search" type of game. Most people get sick of sub searching after a few games, because the game isn't really challenging. It's a simple matter to narrow down your coordinates with each shot, and the game becomes a sort of three-dimensional high-low. The twist in this game is that you are shooting at more than one target at once (six in this version), and you have to be a lot

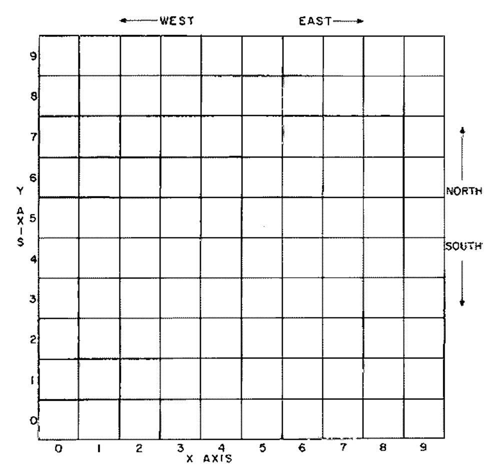

Fig. 1. This is how the board is set up. It represents your enemy's missile base.

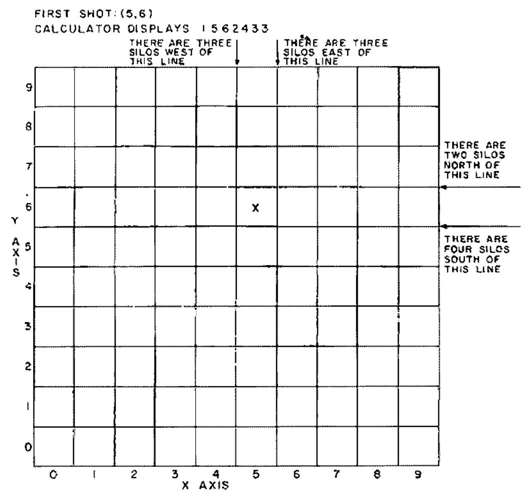

Fig. 2. Diagram of example used in text.

more clever to figure out where they are.

How To Play

For equipment (besides the calculator), you will need a pencil and a sheet of paper marked off into one hundred squares in a ten-by-ten array. This sheet of paper represents your enemy's military base which you are attacking. You don't have to use this paper diagram, but, without it, keeping track of your play is nearly impossible. The columns are numbered 0 through 9, from left to right, and the rows are numbered likewise, from bottom to top (Fig. 1). In this way, the board could be looked at as the first quadrant in an x-y plane, so I will refer to the west-east direction as the x-axis and the north-south direction as the y-axis.

Your enemy has six ballistic missile silos hidden at random on this base. You, on the other hand, have a remotely-controlled offensive weapons satellite from which you can drop guided nuclear bombs upon the enemy base. You input the coordinates of the square upon which the bomb is to fall. It is your task to destroy all six silos using as few of your bombs as needed. The only information you are given is the number of silos that lie to the north, to the east, etc., of each bomb you drop. How well you do depends on your skill at organizing and interpreting this information. There is no upper limit on the number of shots you may take.

Each time you load the program, you will have to enter a seed for the random number generator that locates the silos at the beginning of each game. Enter your number and press A. You can use the time of day, your age in minutes, the Dow-Jones average, whatever. I usually just hit the decimal point and then seven or eight digits at random. Any number between 0 and 10^9 will work (except the number one—the random number generator chokes on the number one).

To start the game, press B. The calculator will take about thirty seconds to randomly locate the six silos and will display a zero when ready. You need only randomize once for each series of games you play. Each successive start will give a different pattern of silos.

Now select which square you want to bomb first (example: 5,6—five is the west-east, or x-, coordinate, and 6 is the north-south, or y-, coordinate). Press 5 and then D to enter the x-coordinate, followed by 6, then E to enter the y-coordinate and run the program. Congratulations, you have just destroyed everything within square 5,6. And you didn't even have to file an environmental impact statement! After about 25 seconds, the calculator will come back with a confusing string of digits, like 1562433. Let's break this display down digit by digit and explain what it means.

Taking the digits from left to right, the first digit, 1, means shot number one. The next two digits, 56, are an echo of which square you bombed. The next digit, 2, means that there are two silos to the north of this shot. This doesn't necessarily mean that they are directly north along the same column, but *only that their y-coordinates are greater*. This is a major point of confusion among new players (see Fig. 2). The remaining digits are similarly south, east, and west, respectively.

Wait a minute! The example says 2433. That adds up to twelve silos. Is there a bug? No, each silo counts twice—once as being either north or south of where the bomb was dropped, and again as being either east or west. Note that, if a silo lies along the same line as your shot, it won't show up in either of the two indicators for that direction. In other words, a silo on the same vertical column as your shot counts as neither east nor west, and one along the same horizontal row counts as neither north nor south.

When you hit a square that contains a silo, the display will flash. Press CE to stop the flashing. When a silo is hit, it is destroyed and will not show up on subsequent shots. Although it doesn't happen very often, two or more of the silos may be placed in the same square. When this happens, they are both destroyed when the square is bombed.

When the last silo is hit, the last four digits will be 0000, and the game is over. To start a new game, press B.

Different people have come up with different strategies for this game, and I will leave you to find your own. Among people I know, the best players average about thirteen shots per game. The record low at this writing is eight bombs. However, at the other end of the spectrum, I saw one person give up after fifty shots. That base must have really been smoking!

About the Program

Writing a program for a programmable calculator is very different from writing a program in microprocessor assembly language or a higher level language such as BASIC. The greatest disadvantage of the programmable calculator is its small amount of program memory. The simplicity of pushing each key to enter its function into the program makes coding a program, say from a flowchart, very simple and straightforward. However, a more complex program will need more keystrokes than there is memory to hold them when using the straightforward approach. So the programmer must resort to tricks to condense the program to a usable size. The trade-offs involved with these tricks are: (1) They make the program harder to debug and harder for someone other

Register	Contents
99	random seed
19	number of shots taken
18	x-coordinate of shot
17	y-coordinate of shot
16	number of silos north of shot
15	number of silos south of shot
14	number of silos east of shot
13	number of silos west of shot
12	silo #1 x-coordinate
11	silo #1 y-coordinate
10	silo #2 x-coordinate
09	silo #2 y-coordinate
08	silo #3 x-coordinate
07	silo #3 y-coordinate
06	silo #4 x-coordinate
05	silo #4 y-coordinate
04	silo #5 x-coordinate
03	silo #5 y-coordinate
02	silo #6 x-coordinate
01	silo #6 y-coordinate
00	dsz and pointer

Fig. 3. Register usage table.

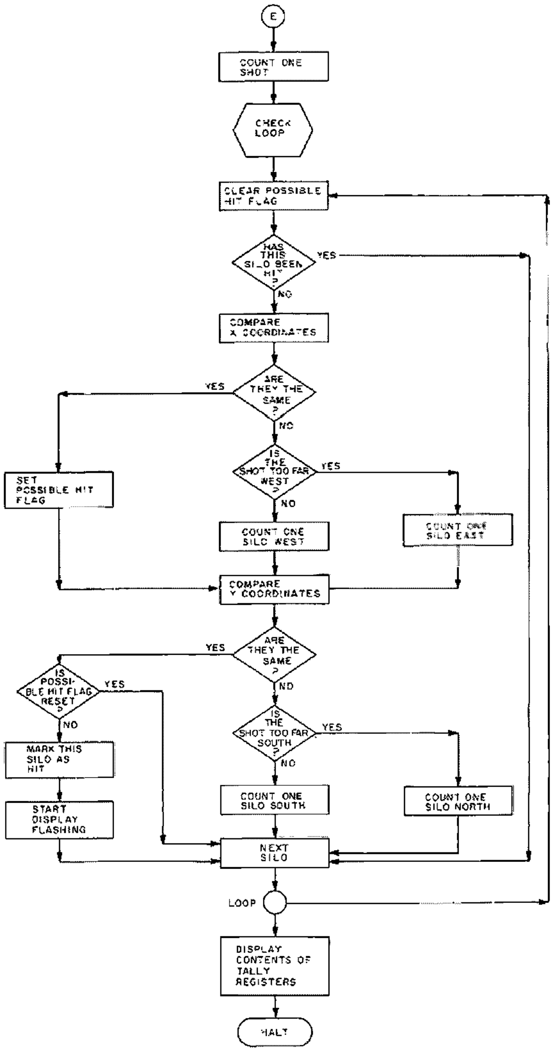

Fig. 4. Flowchart.

than the programmer to understand, and (2) they usually slow the program down. So, as vital as informative remarks and good documentation are for regular programs, they become even more important for the programmable calculator's programs.

In this game, the x- and y-coordinates of each silo are stored in registers 01 through 12 (see Fig. 3). When a game is started by pressing B, 12 is stored in register R_{00}, which is used as a pointer. The program generates a random digit, which is stored in the register pointed to by R_{00} using an IND STO instruction (step 197). The IND key is one of the most useful programming functions on the SR-52. It tells the calculator that it is to perform the memory function immediately following the IND (STO, RCL, EXC, SUM, etc.), not on the register specified in the instruction, but on the one whose number is stored in that register. For example, if R_{00} contains the number 9, then the command IND STO 00 would perform the same function as STO 09: The displayed number would be stored in register 09.

Using the dsz instruction (decrement and skip or zero) after each random number is stored, the program decrements the value in R_{00} by 1 and checks to see if it has reached zero. If it hasn't, the program loops back to LBL *7' and repeats the process. So, effectively, the first time through, the loop R_{00} contains 12 and the IND STO 00 stores the random digit in R_{12}. The next time through, R_{00} contains 11 and the random digit goes in R_{11} and so on. When R_{00} finally reaches zero, the dsz doesn't cause a branch, but just lets the program continue and halt. Now R_{01} through R_{12} each contain a random digit, and these are the coordinates of the silos (Fig. 3).

The Silo Shuffle

The random number generator (steps 179-196) has its random seed stored in register 99. This is because R_{99} and R_{98} are surplus registers which are unaffected by the CMs instruction which clears R_{00} through R_{19}. The seed is recalled, Inxed, and then squared and stored back in R_{99} as the new seed. This number is multiplied by the degrees/radians constant (57.295779513) and the part to the left of the decimal is chopped off, leaving a decimal fraction. The decimal is multiplied by ten, and the digits to the right of the decimal are removed, leaving an integer from 0 to 9. This approach can be modified to produce random integers from zero to N by replacing the multiplier of 10 in step 193 with a multiplier of N+1.

Pressing D stores the x-coordinate of your shot in R_{18}. E stores the y-coordinate in R_{17} and continues on to the main body of the program.

Each silo is checked individually. First the xs are compared by subtracting the shot x from the silo x. If the result is zero, then that means that the shot and silo are on the same column. Flag zero is set when this happens so that the calculator will remember later in the program that the xs were the same in case the ys are the same, too, which would mean a hit. If the difference between the x-coordinates is positive, then the silo x was greater than the shot x, and the shot must have fallen to the west of the silo, so R_{14}, which contains the number of silos to the east, is incremented by one. If the difference is negative, then the opposite is true, and R_{13} (west) is incremented instead.

Now, since we are using R_{00} as a pointer to tell which coordinate of which silo we are working on, we must decrement it by one to get to the y-coordinate. We do this with a dsz command that branches just ahead of itself. The same procedure as was used on the x-coordinates is applied to the y-coordinates, except that now, if they are the same, we must check to see if flag zero is set. If it is, then both silo coordinates match the shot coordinates, and we have a hit. When a silo is hit, the program changes its x-coordinate to -1 as an indicator that it has been hit and is to be skipped over on later shots. Then a $\sqrt{x}$ establishes an error condition so the display will flash when execution is completed. If the y-coordinates are not the same, then, like before, the north register or the south register is incremented, depending on which side of the silo the shot fell.

Now another dsz instruction loops back to the beginning of the check procedure and moves the pointer to the x-coordinate of the next silo, or, if there are no more silos to check, passes control on to the display routine.

The display segment demonstrates a useful way to display the contents of several registers at once. Again R_{00} is used as a

pointer, but this time it starts at 19 and is decremented until it reaches 13, and the program halts. The calculator keeps a running total of the contents of each register times a decreasing power of ten. Thus we get $(R_{19}) \times 10^6 + (R_{18}) \times 10^5 + \ldots + (R_{13}) \times 10^0$. Each register contains only a one-digit number, so the resulting sum is a number made by stringing together the contents of registers 19 through 13. Of course, the proper things are stored in each register in order to have the display come out in the order we want.

For the Sake of Speed

Looking over the program listing, you may be wondering about the strange order in which the segments of the program are arranged in memory. The user-defined labels are near the end, and the program branches and subroutines come before the program. The best way I can answer this question is to have you try the following experiment:

Run the four programs in Fig. 5, and time the execution using the second hand of a clock or a stopwatch. Make sure you turn the calculator off to clear the program memory before entering each program.

You can see that the four programs do exactly the same thing. They only differ in their locations in memory and their dsz instructions. Two of them are labeled branches, and two are directly addressed. On my calculator, all programs run in about ten seconds except number two, which takes more than forty. It seems reasonable to me to assume that, when the calculator is told to branch to a particular label, it must search through the program memory starting from the beginning. Naturally, the farther down in the program memory a label is, the longer the calculator must take to find it and the slower the execution will be. In program one, the sought-after label B is almost at the beginning, so the calculator finds it quickly, and the loop executes swiftly. In program two, however, the machine must seach through almost the entire memory before it locates label B. Consequently, this loop takes

Step	Keystrokes	Comments
000	*LBL *1'	
002	*dsz *8'	Skip this silo.
004	*LBL *2'	
006	*st flg 0	Set the "possible hit" flag.
008	GTO *5'	
010	*LBL +	
012	1 SUM 14	Count one silo east.
016	GTO *5'	
018	*LBL *9'	
020	1 SUM 16	Count one silo north.
024	GTO *8'	
026	*LBL *3'	
028	INV *if flg 0 *8'	If flag set, then we have a hit.
032	1 SUM 00	Change x-coordinate
036	± *IND STO 00	of silo to -1.
041	*√x *dsz *8'	Start display flashing.
044	*LBL *B'	Integer-part subroutine.
046	(STO - . 5)	Subtract rounding constant.
052	*fix 0 *D.MS	Eliminate fractional digits.
055	*rtn	
056	*LBL E	
058	STO 17 CE	Store y-coordinate of shot.
062	1 SUM 19	Count one shot.
066	0 STO 16 STO 15 STO 14 STO 13	Clear N.,S.,E.,W. registers.
079	12 STO 00	Initialize check loop.
084	*LBL *4'	Beginning of loop.
086	INV *st flg 0	Clear "possible hit" flag.
089	*IND RCL 00	Get x of silo.
093	INV *if pos *1	Branch if it's been hit.
096	- RCL 18 =	Compare to x of shot.
101	*if zro *2'	If same, set flag.
103	*if pos +	If greater, count one silo east,
105	1 SUM 13	else count one silo west.
109	*LBL *5'	
111	*dsz 115	Move to y-coordinate.
115	*IND RCL 00 - RCL 17 =	Compare silo y to shot y.
124	*if zro *3'	If same, check for hit.
126	*if pos *9'	If greater, count one silo north,
128	1 SUM 15	else count one silo south.
132	*LBL *8'	
134	*dsz *4'	Branch back if more silos.
136	20 STO 00 0	Initialize display loop.
142	*LBL *6'	Beginning of loop.
144	+ *dsz 149	Move to next register.
149	*IND RCL 00 X 10 y^x	Get contents of this register and
157	(RCL 00 - 13)	multiply by decreasing powers of ten.
165	INV *if zro *6'	
168	= HLT	
170	*LBL B	Begin new game.
172	CLR CMs	Clear everything.
174	12 STO 00	Initialize setup loop.
179	*LBL *7'	Beginning of loop.
181	RCL 99 lnx *x^2 STO 99	Make a random digit
189	INV *D/R - *B' X 10 = *B'	from 0 to 9.
198	*IND STO 00	Store it as a silo coordinate.
202	*dsz *7'	Branch back for the next one.
204	CLR HLT	Ready to play.
206	*LBL A	
208	STO 99 HLT	Store initial random seed.
212	*LBL D	
214	STO 18 HLT	Store x-coordinate of shot.

Program listing.

much longer to execute. In programs three and four, the branches are made directly to a specified address. The calculator doesn't have to waste time searching, because it has been told exactly where to put the program counter. Thus, both of these loops execute quickly no matter where they are placed in program memory.

As I said, this explanation is an educated guess on my part, and perhaps someone who knows what goes on in the mind of a TI calculator will write in and clarify this point.

Anyway, this is the reason for placing the branches and subroutines before the main program—the closer they are to the beginning of program memory, the faster the calculator can find them and the faster the program will run. It does make the program more confusing to look at, and I don't recommend that you try to write your programs this way. But, when you finish a long program and have it running, you may find that rearranging things will speed it up considerably.

Go, Team, Go

The game was popular enough in the dorm where I live that we decided to hold a tournament. Each contestant would play three games and total his scores, lowest score winning. To make things fair, each person would play the same three configurations of silos. This was accomplished by randomizing with the same initial seed before each game. For example, we used sin 1, sin 2, and sin 3. The random number generator then generates the same sequence each time, and the silos come out in the same spots. I find that it's handy to write down the number you initialize with anyway. That way, if the system crashes (batteries go dead), it's simple to set the same game up again after plugging in the charger. It's really frustrating to lose a game half way through, especially when you were just about to blast a silo.

And you certainly don't have to be a computer buff to enjoy the game. My roommate won the tournament—he's a political science major! ■

step	keystrokes		
Program one		**Program three**	
000	*LBL A	000	*LBL A
002	100 STO 00	002	100 STO 00
008	*LBL B	008	*LBL B
010	*dsz B	010	*dsz 008
012	HLT	014	HLT
Program two		**Program four**	
200	*LBL A	200	*LBL A
202	100 STO 00	202	100 STO 00
208	*LBL B	208	*LBL B
210	*dsz B	210	*dsz 208
212	HLT	214	HLT

Fig. 5.

LETTERS

from page 96

10 meter band, at a kW, and worked the world with no hassle by the FCC!

Please, Wayne—don't say anything sarcastic or derogatory about the FCC until my call letters come. Maybe the truth hurts and they become even more vindictive. I hope there will still be some frequencies left for hams by the time I can go on the air!

Walter Kimmel
Ponsford MN

FORGET ABOUT THIS ONE

Enclosed is the renewal form you sent me for renewal to your magazine. While I like your magazine very much, there are certain things that I cannot tolerate. I now take all the ham magazines, *QST*, *CQ*, and *Ham Radio*; I am a life member to *QST* and have all the rest paid for until 1981.

Now, all four magazines are real good magazines, and I like them very much. But up to this point, I have yet to hear one of them badmouth your magazine, but every month, and I do mean every month, you have your nasty snide remarks about them. I don't like it; it is the act of a 3-year-old child, to say the least.

There is nothing I can do about it, but I don't have to sit here and read it, so just forget about this renewal. When you grow up into a grown man, I might consider renewal.

Just remember, Mr. Green, the other magazines are just as good as yours, and that is supported by a lot more opinions than mine.

I hold no magazine rating over the top of the other one. I don't hold *QST* over *73* or *73* over *QST*. I read them all with interest and really learn a lot from them all.

It is your magazine; run it the way you want, as I know you will. But remember, it takes customers to keep it going. Look at the renewals you did not get and ask yourself why you did not get them.

Carl Manion W4BDC
Shepherdsville KY

. . . AND THIS ONE

I'll be only too happy to renew my subscription to *73* as soon as Wayne recovers from his total fascination with microprocessors et al, and begins to print stories on some other aspects of amateur radio again!

Bob Kuehn WØHKF
Saint Paul MN

LET'S DO SOMETHING!

Wayne, is there anyone who can represent the hams and let their desires be known? The ARRL does not and will not represent anyone but the ARRL. You've pretty well said it all in your editorials. I feel that if we keep sitting on our duffs, we will have exactly what the ARRL would like for us to have—nothing! The "Spark Forever" boys in Newington are too busy making a buck. Wonder if they've heard of micros yet? The point is, if you are willing to accept the ambassadorship, I'm willing to donate ten bucks to the cause and I would bet a large percentage of your readers would do likewise. Why not ask them and get a campaign started? At any rate, let's do something!

Jim Best WAØRZI/4
Woodbridge VA

KA CONFUSION

I am writing on behalf of the members of the Far East Auxiliary Radio League (FEARL) and all others assigned callsigns with a KA prefix to request your assistance in disseminating information on a problem we are having here in Japan.

Since shortly after the close of World War II, U.S. Forces personnel in Japan have been issued callsigns prefixed with KA. KA callsigns in Japan are issued by the military authorities in a 2 x 1, 2 x 2, or 2 x 3 format, and there are currently authorized stations assigned KA1, 2, 3, 5, 6, and 8 prefixes with the possibility of KA areas

Continued on page 124

Charles Zappala WA7VZR
8051 N.E. 143rd
Bothell WA 98011

Computerized QSO Records

—*who needs a logbook?*

Well, enough already of computer games — let's get down to serious application programming! I've always wanted a computerized log and inquiry system to rid me of trying to relate callsigns to names . . . "Gee, that call is familiar. Did I work him before? What's the handle? QSLs? Aw, rats! What's the handle, old man?"

This program (Fig. 2) will take care of all those questions. It will allow you to quickly enter log entries by using data statements beginning at line 1000. The end-of-data file is indicated as DATA 999999, as shown at line 1005. You can have as many data lines as your memory can hold. In the inquiry mode (RUN), the program will print out (display) log entries by date, callsign, or just print out all of the entries, by entering its function number.

To add log entries, type in function 1 and a LIST function starting at line 1000 will begin and take you out of BASIC. This will allow you to change the DATA 999999 line to a log entry. The DATA format is: (line number) DATA (year, month, day), (time), (callsign), (frequency), (mode), (power), (QSL), (QTH-name).

Note that "QTH" and "name" share the same data item definition.

Note that the date must be entered as YYMMDD (year, month, day). I'll explain why soon. After the entries are made, add (line number) DATA 999999 to end the data file. Type RUN again to begin the program.

Function 2 selects log entries for printing by entering two dates in the YYMMDD format. What comes out is all log entries between and including the dates specified. The logic is located in line 416. With the YYMMDD format, dates run in ascending numerical order, which makes the logic just plain simple.

Function 3 selects log entries for printing by entering a callsign. What comes out is every log entry for that callsign. The logic is very simple and is located in line 510. Function 4 prints out all the log entries.

By using subroutines to

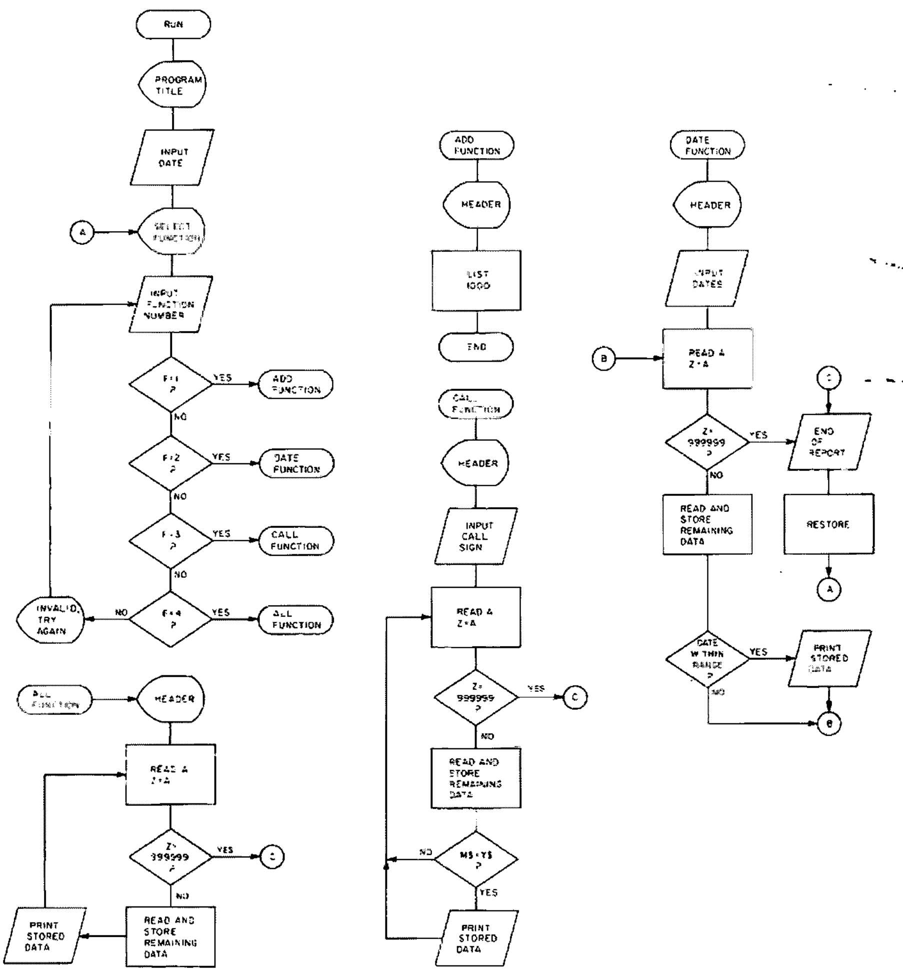

Fig. 1. System flowchart.

```
LIST

10 REM ************ AMATEUR RADIO LOG AND INQUIRY SYSTEM ************
11 REM                               BY COMPUTER
12 REM WRITTEN BY CHUCK ZAPPALA WA7VZR 8051 NE 143RD BOTHELL WA 98011
13 REM
14 REM THIS PROGRAM IS RELEASED TO PUBLIC DOMAIN               MAY 1977
15 REM
16 REM VERSION 1.0     WRITTEN IN ALTAIR 8K BASIC VERSION 3.1
17 REM
18 REM ****************************************************************
100 PRINT:PRINT"AMATEUR RADIO LOG AND INQUIRY SYSTEM":PRINT
102 PRINT:INPUT"ENTER TODAY'S DATE (YYMMDD)";D:PRINT
105 PRINT:PRINT"SELECT ONE OF THE FOLLOWING FUNCTIONS":PRINT:PRINT
110 PRINT"   1. ADD LOG ENTRIES"
115 PRINT"   2. PRINT LOG ENTRIES BY DATE"
120 PRINT"   3. PRINT LOG ENTRIES BY CALL SIGN"
125 PRINT"   4. PRINT ALL LOG ENTRIES"
145 PRINT:INPUT"ENTER FUNCTION NUMBER";F
160 IF F=1 THEN GOTO 300
165 IF F=2 THEN GOTO 400
170 IF F=3 THEN GOTO 500
175 IF F=4 THEN GOTO 600
200 PRINT"INVALID, TRY AGAIN":GOTO 145
300 REM ADD LOG ENTRIES
302 PRINT:PRINT
304 PRINT"ADDING LOG ENTRIES BY DATA STATEMENTS":LIST 1000
400 REM PRINT LOG ENTRIES BY DATE
402 PRINT:PRINT
404 INPUT"ENTER FIRST DATE (YYMMDD)";N1:PRINT
406 INPUT"ENTER NEXT DATE (YYMMDD)";N2:PRINT
408 PRINT"LOG ENTRIES BETWEEN ";N1;" AND ";N2:PRINT:GOSUB  800
412 GOSUB 700
414 IF Z=999999 THEN 950
416 IF Z>=N1 AND Z<=N2 THEN 420
418 GOTO 412
420 GOSUB 720
422 GOTO 412
500 REM PRINT LOG ENTRIES BY CALL SIGN
502 PRINT:PRINT
504 INPUT"ENTER CALL SIGN";M$:GOSUB 800
506 GOSUB 700
508 IF A=999999 THEN 950
510 IF M$=X$ THEN 514
512 GOTO 506
514 GOSUB 720
516 GOTO 506
600 REM PRINT ALL LOG ENTRIES
602 PRINT:PRINT
604 GOSUB 800
606 GOSUB 700
610 GOSUB 720
612 GOTO 606
700 REM READ DATA FILE
702 READ A:Z=A:IF Z=999999 THEN GOTO 950
704 READ A$:Y$=A$
706 READ B$:X$=B$
708 READ C$:W$=C$
710 READ D$:V$=D$
712 READ E$:U$=E$
714 READ F$:T$=F$
716 READ G$:S$=G$
718 RETURN
720 REM PRINT DATA RECORD
722 PRINT Z;"  ";Y$;"  ";X$;"  ";W$;"  ";V$;"  ";U$;"  ";T$;"  ";S$
724 RETURN
800 REM REPORT HEADER
801 PRINT "REPORT DATE ";D:PRINT
802 PRINT" DATE      TIME  CALL   FREQ MODE  PWR QSL QTH  NAME"
804 FOR N=1 TO 51:PRINT"=";:NEXT N:PRINT"="
806 RETURN
950 REM END OF REPORT
952 PRINT"END OF REPORT":RESTORE:GOTO 105
999 END
1000 DATA 770502,1805,K9QAG,14.2,SSB,260,N,IL  MERNIE
1001 DATA 770502,1832,WB6RRF,14.2,SSB,250,N,CA GLENN
1002 DATA 770503,1158,ZL1BAG,14.2,SSB,260,N,NZ HAL
1003 DATA 770504,0914,WA0ZDR,14.3,SSB,260,N,KA SKIP
1004 DATA 770505,1105,WB5WCG,14.3,SSB,250,Y,NM DAVE
1005 DATA 999999
>
PRINT FRE(X)
 3787

>
```

Fig. 2. Program listing.

```
RUN

AMATEUR RADIO LOG AND INQUIRY SYSTEM


ENTER TODAY'S DATE (YYMMDD)? 770530


SELECT ONE OF THE FOLLOWING FUNCTIONS


   1. ADD LOG ENTRIES
   2. PRINT LOG ENTRIES BY DATE
   3. PRINT LOG ENTRIES BY CALL SIGN
   4. PRINT ALL LOG ENTRIES

ENTER FUNCTION NUMBER? 4


REPORT DATE  770530

 DATE      TIME  CALL   FREQ MODE  PWR QSL QTH  NAME
====================================================
 770502    1805  K9QAG  14.2  SSB  260  N  IL  MERNIE
 770502    1832  WB6RRF  14.2  SSB  260  N  CA GLENN
 770503    1158  ZL1BAG  14.2  SSB  260  N  NZ HAL
 770504    0914  WA0ZDR  14.3  SSB  260  N  KA SKIP
 770505    1105  WB5WCG  14.3  SSB  260  Y  NM DAVE
END OF REPORT

SELECT ONE OF THE FOLLOWING FUNCTIONS


   1. ADD LOG ENTRIES
   2. PRINT LOG ENTRIES BY DATE
   3. PRINT LOG ENTRIES BY CALL SIGN
   4. PRINT ALL LOG ENTRIES

ENTER FUNCTION NUMBER? 3


ENTER CALL SIGN? ZL1BAG
REPORT DATE  770530

 DATE      TIME  CALL   FREQ MODE  PWR QSL QTH  NAME
====================================================
 770503    1158  ZL1BAG  14.2  SSB  260  N  NZ HAL
END OF REPORT

SELECT ONE OF THE FOLLOWING FUNCTIONS


   1. ADD LOG ENTRIES
   2. PRINT LOG ENTRIES BY DATE
   3. PRINT LOG ENTRIES BY CALL SIGN
   4. PRINT ALL LOG ENTRIES

ENTER FUNCTION NUMBER? 2


ENTER FIRST DATE (YYMMDD)? 770503

ENTER NEXT DATE (YYMMDD)? 770504

LOG ENTRIES BETWEEN  770503  AND  770504

REPORT DATE  770530

 DATE      TIME  CALL   FREQ MODE  PWR QSL QTH  NAME
====================================================
 770503    1158  ZL1BAG  14.2  SSB  260  N  NZ HAL
 770504    0914  WA0ZDR  14.3  SSB  260  N  KA SKIP
END OF REPORT

SELECT ONE OF THE FOLLOWING FUNCTIONS


   1. ADD LOG ENTRIES
   2. PRINT LOG ENTRIES BY DATE
   3. PRINT LOG ENTRIES BY CALL SIGN
   4. PRINT ALL LOG ENTRIES

ENTER FUNCTION NUMBER? 1


ADDING LOG ENTRIES BY DATA STATEMENTS

1000 DATA 770502,1805,K9QAG,14.2,SSB,260,N,IL  MERNIE
1001 DATA 770502,1832,WB6RRF,14.2,SSB,260,N,CA GLENN
1002 DATA 770503,1158,ZL1BAG,14.2,SSB,260,N,NZ HAL
1003 DATA 770504,0914,WA0ZDR,14.3,SSB,260,N,KA SKIP
1004 DATA 770505,1105,WB5WCG,14.3,SSB,260,Y,NM DAVE
1005 DATA 999999
>
```

Fig. 3. Sample run.

read, store, control, and print, the program becomes quite small. For example, lines 700 to 718 read the data, test for end of data, and store the data in string variables Z, Y$, X$, W$, V$, U$, T$, and S$. After reading, control returns to the calling portion of the program, usually to test either variable Z for dates or X$ for callsign. If variable Z is within the date range, variables N1 and N2 or X$ equal variable M$. Then the printing subroutine (lines 720 to 724) is executed. In any case, the next data line is read and tested again at line 702. If Z = 999999, then "END OF REPORT" is printed, the data pointer is RESTORED, and a new function is requested.

Storage in lines 702 to 716 was done to accommodate any changes which might destroy the A to G$ variables by intermediate printing, logic, or data manipulation. These same lines could easily have been written with FOR . . . NEXT commands, as could the printing subroutines, but I decided to keep the program simple for small BASIC interpreters. By changing lines 100, 115, 120, 125, 304, 408, 504, 802, and the data lines, just about any kind of data record search can be accommodated.

Other functions could easily be added, also. For example, you may want a printout of all the contacts that have or have not sent a QSL. This could be done by a comparison just like the one in line 510. Only change X$ to V$, then add the required function call number and assign the line numbers. By using AND/OR logic operators, such as in line 416, a varying and quite flexible search can be established. You could print out log entries, such as by date and/or call, or whatever the data statements and logic are set up to look for. ■

RAM Checkout's A Snap

—this tiny program does the job

Rod Hallen WA7NEV
P.O. Box 73
Tombstone AZ 85638

This "memory monitor" is a simple assembly language program designed to load zeros or sequential numbers into a block of memory for testing purposes. My original version would only load 256 bytes at a time, which made testing a new 8K board somewhat of a chore; since it had to be run 32 times (256 x 32 = 8K). This final version will load from 1 to 65,536 (64K) bytes of memory. That should be enough to satisfy everyone.

Address	Op codes	Mnemonics
C900	0E 01	MVI C 01
C902	11 FF 1F	LXI D FF IF
C905	21 00 00	LXI H 00 00
C908	36 00	MVI M 00
C90A	7E	MOV A M
C90B	81	ADD C
C90C	23	INX M
C90D	77	MOV M A
C90E	1B	DCX D
C90F	3E 00	MVI A 00
C911	BA	CMP D
C912	C2 0A C9	JNZ 0A C9
C915	BB	CMP E
C916	C2 0A C9	JNZ 0A C9
C919	C3 04 C0	CALL TO RESIDENT COMMAND MODE

Fig. 1. A complete listing of the memory monitor.

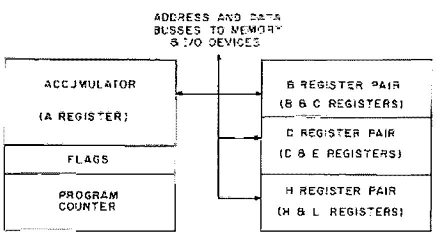

Fig. 2. A simplified drawing of the 8080. The registers which make up the B-, D-, and H-register pairs can be used either in pairs or as individual registers, depending on your requirements. The 8080 contains many other features which are not shown here.

SOL Operations

First, let me describe how my SOL system works so that you can decide how the following explanation pertains to your machine. The SOL has a program in PROM called CONSOL, which handles the keyboard, video, and other routines. I can enter data to memory by typing "ENTER – (address) – (data) – CR," and I can dump memory to the video screen by typing "DUMP – (start address) – (finish address) – CR." If the difference between the start address and the finish address is less than 256 bytes, all of the data requested will fill the screen. If more than 256 bytes are requested, the readout will start at the top of the screen and, when it reaches the bottom, will scroll upward until all of the requested data has appeared.

Apparently, the same ENTER and DUMP (examine) operations will work on a computer which uses front panel switches, but they will be done at a much slower rate. Testing a memory board can be accomplished on any machine by first manually loading data into each memory location on the board and then dumping or examining each location to determine that the correct information was indeed written. My memory monitor does it much more quickly! See Fig. 1. I am very much a novice when it comes to programming, so I make no claim that this is the easiest, fastest, or best way to get the job done.

Breakdown

If you are not familiar with assembly language, you might be interested in how the memory monitor does what it does. In fact, let's look at it line by line. Since SOL and I talk to each other in a number form called hexadecimal, all numbers in this program are hexadecimal (hex for short).

The first column in Fig. 1 is headed "Address," and that tells me where this program will be located in memory. When I tell SOL, "EXECUTE C9ØØ," it will go to memory location C9ØØ, execute the instruction located there, and then continue down the list of instructions until told to stop.

The second column is headed "Op code." These are the instructions, addresses, and data that the computer will use to perform its task.

Column three is headed "Mnemonic" (mnemonic means something that helps the memory). Mnemonics are the assembly language abbreviations for the op codes (machine language codes).

I started the program at location C9ØØ because the SOL has 1K of onboard RAM beginning at that location. You can put it anywhere you like, but you must rewrite the two JNZ (jump non-zero) in-

structions. As they stand, a jump will be made to C9ØA (8080 address and register pair instructions are always written with the address or data backwards). If you wanted to load the memory monitor at location 8ØØØ, for instance, you would change C9 to 8Ø at each place that it appears in the program. This is called relocating the program.

In the first line, Ø1 in location C9Ø1 tells the computer how you want it to load the memory locations. ØØ here would load all zeros (erase memory), and Ø1 would load sequential numbers, ØØ, Ø1, Ø2, etc. Ø2 would load ØØ, Ø2, Ø4, etc.

The FF 1F at locations C9Ø3 and C9Ø4 tells the computer how many address locations you want to load. FF 1F is actually 1FFF (backwards), which is 8K in the hexadecimal number system. See Fig. 3. If you wanted to load a 4K board, then line C9Ø2 would read 11 FF ØF.

Line C9Ø5 lets the computer know which address to start the loading at. The addressing of most memory boards is determined by setting on-board switches or by running jumpers. For this test, I addressed my 8K board to start at address ØØØØ, but it could be set to start anyplace you want, and instruction C9Ø5 should reflect this address. If you wanted to locate this board at 6ØØØ because you already had something at ØØØØ, line C9Ø5 would read 21 ØØ 6Ø (address reversed as usual).

Enter the program into the memory locations you have selected. Execute the first address, and the computer will load ØØ into the starting address on the board to be tested, Ø1 in the next location, Ø2 in the next, and so on, until it has loaded as many locations as you requested. Then it will stop.

Fig. 2 is a simplified drawing of the internal makeup of the 8080 microprocessor. Making use of Figs. 1 and 2, let's step through the memory monitor as the computer would and see what happens. First, my "EXECUTE C9ØØ" command will load C9ØØ into the program counter in the 8080 and start processing instructions from there. The program counter keeps track of which instruction comes next in the program.

The microprocessor can always tell from the first byte of an instruction whether it is a one-, two-, or three-byte instruction. As a start, it will fetch ØE, which is what it found at location C9ØØ, and, since it knows that ØE is a two-byte instruction, it will also fetch Ø1, which is in C9Ø1. ØE (MVI C) tells the processor to take the byte that follows ØE and load it into the C-register. The PC (program counter) then steps to C9Ø2 and starts a new fetch which is 11 plus FF 1F (LXI D FF 1F). 11 says load the following two bytes into the D-register pair (registers D and E). C9Ø5 – 21 ØØ ØØ (LXI H ØØ ØØ) loads ØØ ØØ into the H-register pair (registers H and L), and C9Ø8 – 36 ØØ (MVI M ØØ) tells the processor to load ØØ into the location whose address is found in the H-register pair. In other words, you put the address where you want to start your memory board test into the H-register pair (ØØØØ) and then tell the processor to load ØØ at that location.

Next, move the contents (ØØ) of the start test location (ØØØØ) into the A-register (accumulator) C9ØA – 7E (MOV A M), which means that you are about to work on it. The next instruction C9ØB – 81 (ADD C) will add the contents of register C to the accumulator (ØØ + Ø1), and C9ØC – 23 (INX M) increases the address in the H-register pair by one. C9ØD – 77 (MOV M A) takes the contents of the accumulator (Ø1) and puts them into the location whose address is now in the H-register pair (location ØØØ1). Now you have ØØ in location ØØØØ and Ø1 in location ØØØ1. C9ØE – 1B (DCX D) subtracts one from the contents of the D-register pair, and C9ØF – 3E ØØ (MVI A ØØ) puts ØØ into the accumulator.

At the start, the D-register pair contained the total number of locations you wanted to load. After you've gone through the program once and subtracted one from D, check to see if you are finished. The accumulator contains the ØØ which you loaded there. C911 – BA (CMP D) compares the contents of the D-register with the contents of the accumulator (ØØ) and, if they are equal, sets the zero flag. If they are not

Decimal		Hexadecimal
256		FF
512		1FF
768		2FF
1024	(1K)	3FF
2048	(2K)	7FF
3072	(3K)	BFF
4096	(4K)	FFF
8192	(8K)	1FFF
16384	(16K)	3FFF
32768	(32K)	7FFF
65536	(64K)	FFFF

Fig. 3. A decimal-to-hexadecimal conversion table.

equal, C912 – C2 ØA C9 (JNZ ØA C9) will take you back to C9ØA for another run through the program.

If they are equal (both ØØ), the program counter will move to C915 – BB (CMP E) and compare the E-register, which is the lower half of the D-register pair, to see if it is zero also. C916 – C2 ØA C9 (JNZ ØA) works the same as C912 and reruns the program or passes to the next instruction, depending on the condition of the zero flag. When both registers of the D-register pair are equal to zero, then you have loaded as many memory locations as you originally asked for.

It is now time to exit the program. C919 – C3-Ø4 CØ is a call to the command mode in the SOL CONSOl. operating system. When SOL is

0000	00	01	02	03	04	05	06	07	08	09	0A	0B	0C	0D	0E	0F
0010	10	11	12	13	14	15	16	17	18	19	1A	1B	1C	1D	1E	1F
0020	20	21	22	23	24	25	26	27	28	29	2A	2B	2C	2D	2E	2F
0030	30	31	32	33	34	35	36	37	38	39	3A	3B	3C	3D	3E	3F
0040	40	41	42	43	44	45	46	47	48	49	4A	4B	4C	4D	4E	4F
0050	50	51	52	53	54	55	56	57	58	59	5A	5B	5C	5D	5E	5F
0060	60	61	62	63	64	65	66	67	68	69	6A	6B	6C	6D	6E	6F
0070	70	71	72	73	74	75	76	77	78	79	7A	7B	7C	7D	7E	7F
0080	80	81	82	83	84	85	86	87	88	89	8A	8B	8C	8D	8E	8F
0090	90	91	92	93	94	95	96	97	98	99	9A	9B	9C	9D	9E	9F
00A0	A0	A1	A2	A3	A4	A5	A6	A7	A8	A9	AA	AB	AC	AD	AE	AF
00B0	B0	B1	B2	B3	B4	B5	B6	B7	B8	B9	BA	BB	BC	BD	BE	BF
00C0	C0	C1	C2	C3	C4	C5	C6	C7	C8	C9	CA	CB	CC	CD	CE	CF
00D0	D0	D1	D2	D3	D4	D5	D6	D7	D8	D9	DA	DB	DC	DD	DE	DF
00E0	E0	E1	E2	E3	E4	E5	E6	E7	E8	E9	EA	EB	EC	ED	EE	EF
00F0	F0	F1	F2	F3	F4	F5	F6	F7	F8	F9	FA	FB	FC	FD	FE	FF

Fig. 4. A memory dump of the first 255 bytes of memory in the SOL. As can be seen, the computer has counted from Ø to 256 in hexadecimal.

turned on or the reset switch is pushed, the computer enters the command mode, puts a prompter (>) on the screen, and waits for me to tell it what to do. This line can be a jump or call to any location you desire and will depend on your machine's operating characteristics.

In order to determine how the test went, I type "DUMP ØØØØ 1FFF," which covers all of the memory locations of this 8K board, and the screen will scroll through these locations. It's much too fast to really check individual locations, but I'm really only interested in the last location. Since the contents of each location are the contents of the previous location plus one, the contents of 1FFF should be FF, if the test went well. If they aren't, then it is necessary to dump 256 byte pages one at a time until the problem area is found. With this program, I found three 2102 pins that were bent under the IC instead of inserted into the sockets. Fig. 4 is what the first 256 bytes of memory look like after running the program.

Summary

Instruction information for the 8080 is contained in the *Intel 8080 Microcomputer Systems User's Manual* and the *Intel 8080 Assembly Language Programming Manual.* The "Intel 8080 Assembly Language Reference Card" is also useful. Anyone who is serious about assembly language programming the 8080 should have all of these.

Any program, whether it is very simple or incredibly complex, is nothing more than a logical progression through a series of instructions. Pick some little chore that you'd like your machine to do, break it down into logical steps, convert those steps into assembly language instructions, and you'll be surprised and happy with the results. ■

Corrections

We would like our readers to note that ECONORAM, as it appeared in our July, 1978, issue ("RAMmed by Morrow—ECONORAM III lauded"), page 110, should have been written ECONORAM™.

John C. Burnett
Managing Editor

I have received quite a bit of mail about my article which you published in the Aug., 1977, issue of *73* entitled, "Build a Double Bazooka." A great deal of interest was evinced, and there were quite a few comments about the fact that the article had been written in a simple enough style that the average ham could understand it. I've naturally fully answered all letters. However, there was one small item, having to do with the printing, that has caused a bit of trouble.

As I have received several requests about its clarification, would you be able to put in a corrected sketch of Fig. 7? I believe that will help some amateurs who did not clearly see what the sketch was intended to show. The clarified sketch is shown below.

The correction may be particularly useful to fellows who are in other countries, and to those who perhaps did not easily understand the parallel coaxial bazooka that I developed.

Bill Vissers K4KI
Cocoa Beach FL

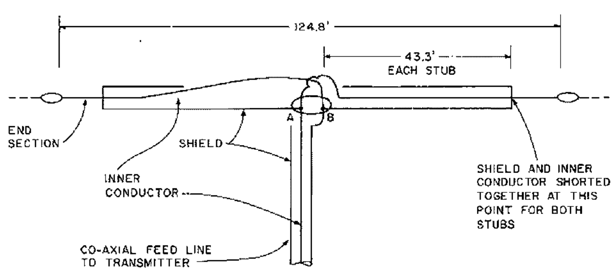

Fig. 7, "Build A Double Bazooka."

I would like to take this opportunity to apologize to you and your readers for not notifying you sooner through the "Letters" section of the demise of CONTACT, which I mentioned in most of my articles.

Inflation has hit the PC business just like everyplace else, and, since I refuse to sell junk or home-etched boards, we were forced out of the business by the last couple of boards. I still have on hand a couple hundred dollars of inventory of the COR and Auto-Dialer boards which never sold, and I was looking at expenses in the neighborhood of $2000 to prepare boards for the next series of articles, so CONTACT went under, at least for the time.

Again, I regret not publishing this earlier and the inconvenience it has caused some readers of my articles.

Bill Hosking W7JSW
Scottsdale AZ

We erred. In "Yes, You Can Build A Synthesizer!" (July, 1978), several schematics were out of place. The correct Fig. 3 (p. 126) was printed on page 131 as Fig. 16. The correct Fig. 16, which was omitted, is shown below. The correct Fig. 17 was printed on page 126 as Fig. 3.

Finally, page 130, column 4, line 8 should read: "equal to the receiver's first i-f ÷ 10 kHz."

John C. Burnett
Managing Editor

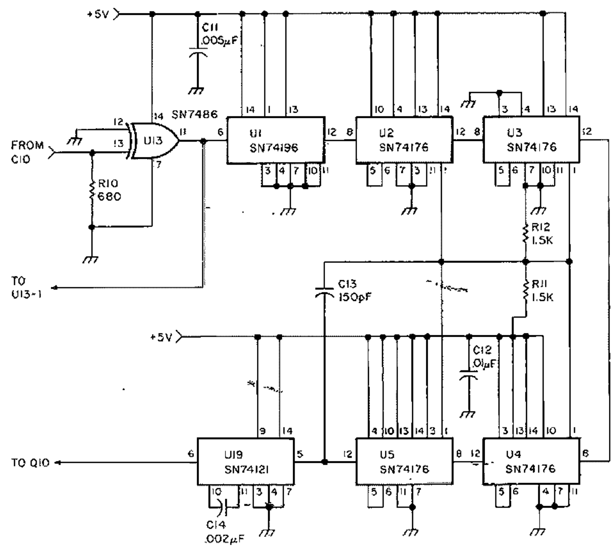

Fig. 16, "Yes, You Can Build A Synthesizer!"

Ham Help

I have recently obtained a General Electric closed circuit television camera which I plan to use on amateur slow scan. My problem is that the unit came minus control cables. The cable terminates in two Amphenol series 67 connectors with 42 pins. Some assistance would surely be appreciated. Thank you.

Jim Davis WD5IMS/8
24712 E. Woodside
Farmington Hills MI 48018

I'm looking for the maintenance manuals and schematics for the National HRO-500 receiver. These receivers have been used in MARS programs over the years. I am willing to pay for duplication costs, if not too exorbitant.

Anton M. Giroux DA1NF/WD6AXL
HHT, 2d ACR, SigO
APO NY 09093

I need a manual or setup procedure and schematic for a "Panoramic Sonic Analyzer," model AP-1, made by Panoramic Radio Products, Mt. Vernon, New York. This unit is a 40-Hz-20-kHz spectrum analyzer. I will gladly pay any reasonable price for a manual or readable copy.

Jerrold S. Tiers
6330 Southwood
Clayton MO 63105

Jody Nelis K3JZD
132 Autumn Drive
Trafford PA 15085

Photos by John Dugan

The Case of the Missing Offset

—adding to the HW-2021

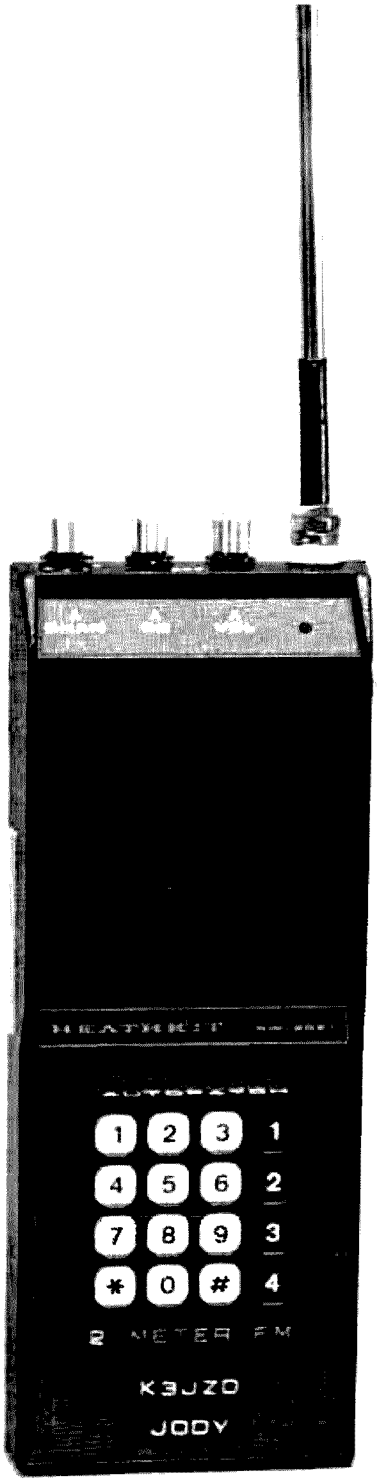

Photo A. Heathkit HW-2021 with the touchtone pad and ¼-wave antenna installed.

After using the Heathkit® HW-2021 2 meter FM hand-held for a little over a year, it has come time to answer the most often asked question of the missing +600 kHz offset once and for all.

Heath has made available to us an inexpensive kit complete with nicad batteries, charger, and rubber ducky antenna. Mine was assembled carefully and has worked fine from the beginning. The transmitter power is adequate, and the receiver is both sensitive and selective. Since all the needed accessories are included with the kit, it is one of the best buys in the hand-held market.

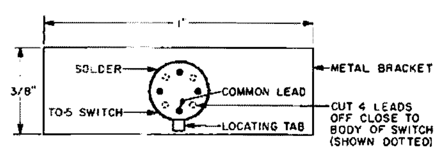

Fig. 1. Offset switch, bottom view (lead end).

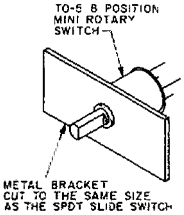

Fig. 2. Offset switch assembly.

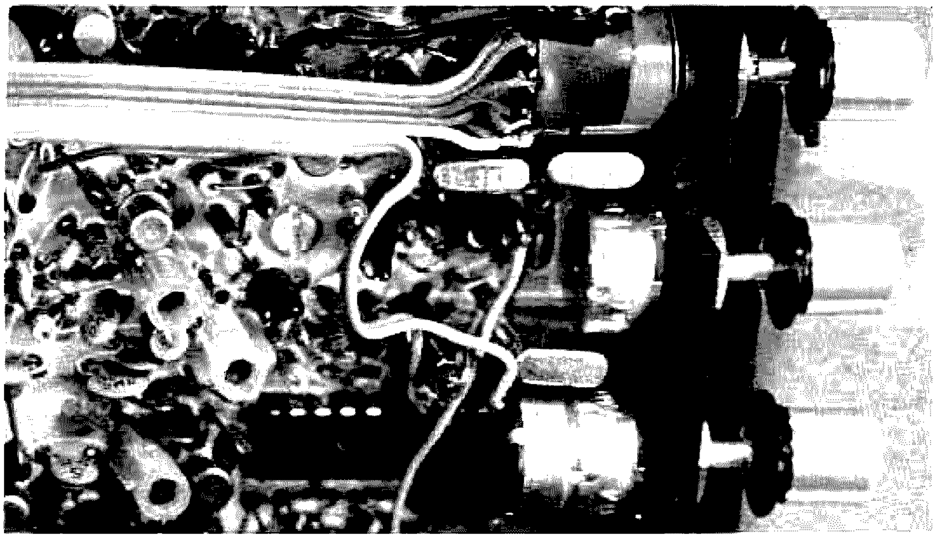

Photo B. Interior wiring details showing new switch and new crystal location.

There is a unique battery-saver pulsing circuit built into the receiver to extend the hours of operating time before the batteries require charging. Rather than the receiver remaining on all of the time, it is pulsed on five times per second, staying on only an instant, unless a signal is present. The battery drain at this time is barely measurable. When a signal breaks the squelch, the receiver stays on and operates normally.

Only one crystal per channel is required, bringing about a further savings when filling up the five available channels. The crystal used is cut for the receive frequency. The crystal netting capacitor can be tweaked just about exactly on frequency with a discriminating ear by listening to the incoming audio. This is great for the times you don't have access to a frequency counter but want to plunk in another channel. The transmit frequency is determined by offsetting the receive frequency, and that's where the rub comes in.

Heath, through some oversight, has overlooked the popularity of 147 MHz repeaters in the crowded suburban areas. As received from Heath, the HW-2021 comes with a two-position transmitter offset switch and two crystals to allow for simplex operation or a -600 kHz offset for the 146 MHz repeaters. The closest Heath comes to accommodating a +600 kHz offset for the 147 MHz repeaters is to list the specifications for a 11.3 MHz crystal to do the job. To use it without making any further changes, you have to sacrifice either simplex operation or the -600 kHz offset. I wanted to work through the repeaters in both ends of the band without giving up simplex operation. The modification outlined here was planned before I even purchased the rig.

The size of a hand-held unit makes any modifications more difficult than they would be in a larger piece of gear. In this instance, finding an SP3T slide switch that would fit in place of the original SPDT switch turned out to be a hopeless task. It seems that nobody makes a subminiature SP3T. I didn't want to alter the HW-2021 case too drastically. The 11.3 MHz crystal had been ordered through an ad in *73* but sat gathering dust for want of a suitable switch.

Then one day it came to me—if an SP3T switch won't fit, why not try a SP8T switch? There are times when the electronic surplus market brings new and exotic components down to a reasonable price. This time, just that happened. The TO-5 mini rotary switch had just appeared in a James ad in *73 Magazine* for less than a dollar. I quickly ordered a handful and got back in gear again. Actually the switch is an SP7T with the eighth position being an off function. It was, however, small enough to use.

After identifying the common lead on the switch and making certain it was saved, alternate leads were cut off close to the body of the switch (see Fig. 1). I removed the extra leads to allow more space to wire to the remaining four. You now have an SP3T rotary switch with valid positions spaced at ninety degrees. There are five dead positions. Remove the original offset slide switch, unsoldering the three bare leads at the switch. Leave the three leads connected in the PC board, at the same length, for now. Cut a metal bracket from a piece of thin metal to the size of the original slide switch, so it will fit in the molded slot in the case. Drill the bracket in the center a little larger than the diameter of the plastic shaft of the TO-5 switch. Orient the TO-5 switch with the locating tab, as shown in Fig. 1, and solder the switch case to the metal bracket.

Insert the rotary switch in the slot in the bottom half of the case. Fit the top half of the case loosely. You will see where the tab on the top half interferes slightly with the switch shaft. File the tab on the top half with a round file, as necessary, to allow the switch to turn freely. It doesn't take much.

Reconnect the three bare wires still connected at the PC board to the new switch, as shown in Fig. 3. Trim the lengths so the wires just reach past the respective leads on the switch. You don't want the typical good mechanical connection prior to soldering here, since future removal of the PC board from the case is more easily accomplished by removing the offset switch first.

Remove the two existing crystals for the simplex and -600 kHz offset. You will move them around to make the switch positions more logical when you are finished. Insert the -600 kHz offset crystal (10.100 MHz) in the PC board socket where shown in Fig. 4. Similarly, insert the new

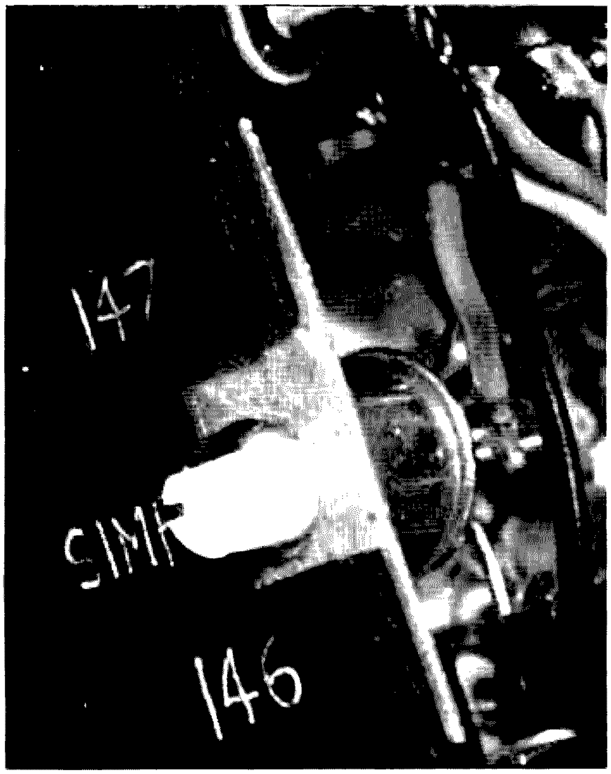

Photo C. Offset switch legend.

+600 kHz offset crystal (11.300 MHz) where shown in Fig. 4.

No location exists in the PC board for the third crystal, which is now the simplex crystal (10.700 MHz). There is a very convenient spot beside the channel selector switch which this crystal will fit into with a minimum of effort. First bend the pins on the crystal very slightly to the side (see Fig. 5). My kit from Heath conveniently included two additional crystal pin sockets (part #432-878). Maybe they all do or maybe it was just luck, but I used them for the third crystal rather than soldering directly to the pins. Slip on the extra pin sockets if you have them, and solder a short length of insulated wire to each socket or crystal pin. I used shrink tubing over this connection for further insulation.

Loosen the channel selector switch mounting nut, and move the switch as close to the squelch control as the mounting hole in the case will allow. There is a little slop in the mounting hole. Put a piece of plastic electrical tape over the channel switch terminals. Insert the 10.700 MHz crystal down in the slot between the channel switch and the case with the pins up (see Fig. 4). The crystal will remain captive without anything else securing it in this location.

Carefully mate the case halves together. Do not force them. The crystal pins may rub on the top half if they are not bent enough. As a precaution, I scraped a little of the silver paint from the inside of the top case half where they might touch. This is metallic paint and is at ground potential. If the channel selector switch binds after adding this crystal, rather than turning freely as before, it must be moved even closer to the squelch control. The case may go together a little more snugly now, but it shouldn't require enough force to damage anything.

After the crystal is mechanically installed, solder the wire coming from the near pin on the crystal to the remaining pin on the offset selector switch (see Fig. 3). The remaining lead from the crystal goes to ground. I connected it to the top lead of resistor R88 which is convenient and at ground potential.

I used an electric engraving pencil to mark the switch legend on the side of the case. After engraving, fill the grooves with white paint to make them more visible (see Fig. 6). I marked mine simply, "146—Simplex—147," rather than the usual +600 and -600; it's less to remember. If you oriented the switch the same as I did, the flat side of the TO-5 shaft acts as the pointer. I painted the flat side red for quick identification in the light. At night or when operating mobile, the flat is easily identified by feel. Switching positions on the switch is done by thumbnail, using the slot cut into the end of the shaft.

As with any other 2m rig using a plus or minus 600 kHz offset switch, a certain amount of memory must be programmed into the operator at this time. You will find, as I have, that transmitting with the -600 kHz offset dialed in and a 147.09 receive crystal selected will never break the squelch on a 69-09 machine. It probably puzzles anyone using 146.49 simplex at the time, though! Another error to watch out for is using 146.52 with the -600 kHz offset. I imagine this is a probable source of the occasional FM signal that

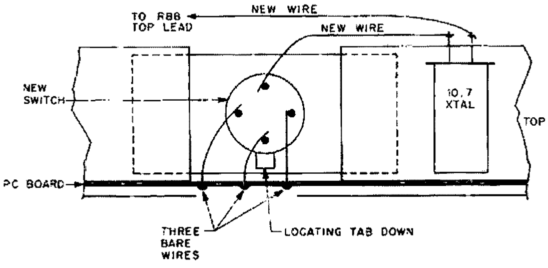

Fig. 3. Offset switch wiring diagram.

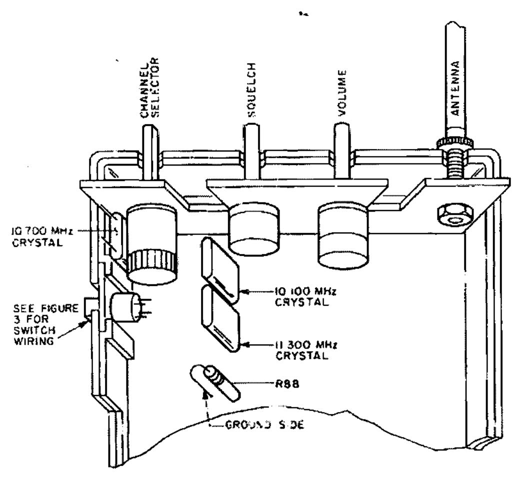

Fig. 4. Parts placement diagram.

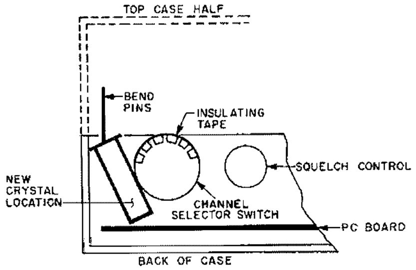

Fig. 5. New crystal location.

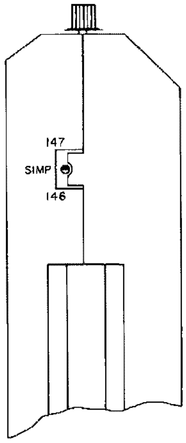

Fig. 6. Switch legend.

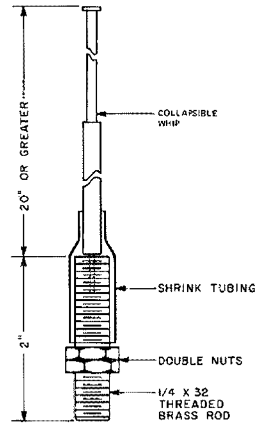

Fig. 7. ¼-wave whip details.

tears up the OSCAR satellites. 145.92 MHz is in the input range of both OSCAR 6 and OSCAR 7.

Now that you have the HW-2021 operating on the whole 2 meter FM band, here are a few other features you can add to improve its performance and versatility. As with any other hand-held, a ¼-wave antenna extends the usable range of this rig far beyond that possible with the rubber ducky provided. Heath has made it a little tougher than usual due to their fixation with nonstandard rf connectors. The HW-2021 antenna has a ¼ x 32 threaded connection, rather than the usual BNC connector. This causes no problem for mobile use. Although unusual, the shorting phone jack provided allows easy connection to an external roof-mounted mobile antenna. There is a problem when you want a ¼-wave or 5/8-wave whip on top of the hand-held. The ¼ x 32 is not a common thread. The standard readily available ¼-inch diameter bolts are ¼ x 20 or ¼ x 28. I eventually ended up at a local machine shop where they were able to turn a length of brass rod to the 32 thread. They also came through with some matching ¼ x 32 nuts.

I used a 21-inch collapsible whip from a broadcast radio for my ¼ wave. Use a two-inch length of the threaded rod drilled at one end to accept the collapsible whip. Solder the two together. Double nut the threaded rod about ½ inch from the other end to provide a stop when screwing it into the HW-2021. Put a piece of shrink tubing over the connection to make it look neat. Fig. 7 shows my system. Final operating length for the whip was determined by varying the length while getting signal reports from another station about ten miles away.

As the photographs show, I also added a touchtone encoder for autopatch and remote-control use. Heath makes an encoder kit for the HW-2021, but I shied away from it because of the possible temperature sensitivity of the 555 timer circuitry, as well as the frequency adjustments it requires. Instead, I chose an encoder sold by the Barber Corporation in Waynesville, Ohio. As advertised in *73*, their pad sells for $34.50 postpaid. A matching case is required for surface mounting the pad to the face of the HW-2021. Barber also has the case for an additional $2.00 postpaid.

The sixteen-button pad was used rather than the more common twelve-button pad only because the matching case is not available for a twelve-button. The Barber unit comes assembled and is self-contained, using a Motorola MC-14410 chip and a 1 MHz reference crystal. No frequency adjustment is required for this unit, nor do the extremes of Pennsylvania's temperatures seem to affect it.

I hooked the pad up using the three-wire circuit in the Barber Corp. instructions. The HW-2021 has a high impedance input. Take the power for the pad from the transmitter circuit. Use the +12 volts from pin Z which Heath provided on the PC board for a TTP. The ground connection goes to pin Y, also provided on the PC board. The audio out from the Barber pad goes to the TTP input pin on the HW-2021 (pin H). My kit included three extra matching female connectors (part #432-120), making these connections a snap. No additional coupling capacitors are required in the audio line, but I did need a 47,000-Ohm resistor in series to keep the level compatible with my local repeaters. Some experimentation is usually required here, since no two repeaters have the same input requirements.

Start with an adjustable pot in series with the audio line to set the level to suit your repeater. Measure the final value and replace the pot with the nearest fixed value resistor. Put this resistor in the line inside the HW-2021 case where it is accessible in the event that a change in value is ever required.

The holes provided in the top of the HW-2021 case for the Heath TTP are not usable for this pad. I used plastic model cement and glued the plastic TTP case to the face of the HT case. The touchtone pad itself was also glued into its case with a light dab at each corner. Maintenance should rarely be required, but, if it is, a knife blade breaks the bond on the glue joints easily.

For mobile work in the hills of Pittsburgh, I built the TR22/15 amplifier from the article in the April, 1976, issue of *73*. The HW-2021 drives this amplifier to between ten and fifteen Watts.

I glued some spring steel clips found in a stationery store to the back of the HW-2021 for a belt clip. Later, the information on how to acquire a Motorola belt clip appeared in *73 Magazine*. It looks a little better. See the letter titled "Bug IV" on page 14 of the November, 1976, issue for ordering information for this clip.

If you have kept up with me on these modifications and improvements to your HW-2021, you are now ready to hold your head high when asked *the question* and reply: "What do you mean it's a nice looking rig but it won't operate on the 147 MHz repeater? Mine does!" ■

What Do You Do With A Timekube?

—when in doubt, modify it!

73 Magazine *Staff*

Radio Shack has introduced its Timekube WWV receiver. Actually, one must say that it has been reintroduced. Many hams will remember using the former model of this WWV receiver in their shacks. However, the former receiver proved too expensive for Radio Shack to continue to have manufactured to sell at a price level which they felt would generate a good sales volume for such a type of receiver. So the receiver was discontinued for a time.

It is interesting, then, to examine what Radio Shack has now been able to come up with in a low-priced ($35) crystal-controlled HF receiver. After all, to receive WWV well in most areas of the country, considering WWV's signal strength and the QRM, the receiver used has to have a fairly good sensitivity and reasonable selectivity. Its performance has at least to start to approach that of a regular communications receiver.

To say it in a nutshell, the Timekube performs its intended function very well. So it is interesting to examine the receiver in a bit of detail to see what circuitry is used and to speculate on what other uses the receiver might be put to around the ham shack.

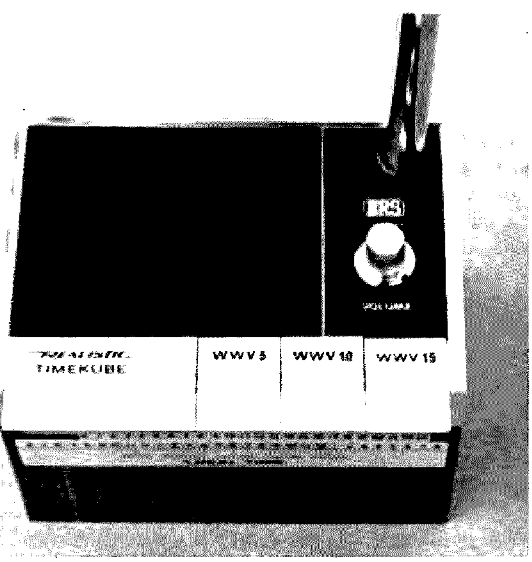

Photo A.

As its name implies, the Timekube is a compact 8 x 12 x 9 cm box that provides for the crystal-controlled reception of WWV at 5, 10, or 15 MHz. It has its own internal speaker and telescoping whip antenna and operates from a standard 9 V transistor radio battery. There is a sliding time scale on the front of the receiver, so local time in any part of the U.S. can be read off continuously opposite the GMT time scale. The only external connection provided for is to an external antenna. Operation is extremely simple in that a push-button is depressed for the desired WWV frequency.

Fig. 1 is the complete schematic of this interesting little receiver. The circuit is that of a simple single-conversion superheterodyne. A few circuit details deserve a little bit of attention. Q104 is the grounded base rf amplifier state which is tuned both at its input and output by L101 and L103, respectively. The rod antenna is connected across the high-impedance side of L101, while a link on the primary side provides for the external connection of an antenna fed by a coaxial line. Q105 is the untuned crystal oscillator stage, and S1, a push-button ganged switch, provides for crystal selection as well as for placing the proper capacitance across L101 and L103 to tune those circuits. Q101 is the mixer stage, and the rest of the receiver is basically a conventional 455 kHz i-f amplifier/AM-detector/audio amplifier configuration. The only exception is the method used to obtain improved i-f selectivity by using "crystal bypassing" in the emitter lead of Q102. This method of getting a single crystal filter into an i-f amplifier with a minimum of fuss was used years ago in some amateur circuits but rarely appeared in commercial equipment. The idea is to replace the emitter bypass capacitor with a crystal. The stage gain will be greatest at the series resonant frequency of the crystal.

Radio Shack claims a ½-microvolt sensitivity (10 dB S/N), but the actual sensitivity which could be measured was from 1 to 3 microvolts throughout the 5 to 15 MHz range. This is more than adequate for WWV reception or for a wide variety of other uses. The selectivity was what was to be expected from a single-pole crystal filter and very adequate for WWV reception. The 200-milliwatt audio output is adequate when WWV is strong, but a bit marginal when WWV is weak and one would like to hear the WWV tones with good volume. Of course, the audio output has to be a compromise with the battery life, and 200 milliwatts is the best one can do working from a 9-volt transistor radio battery.

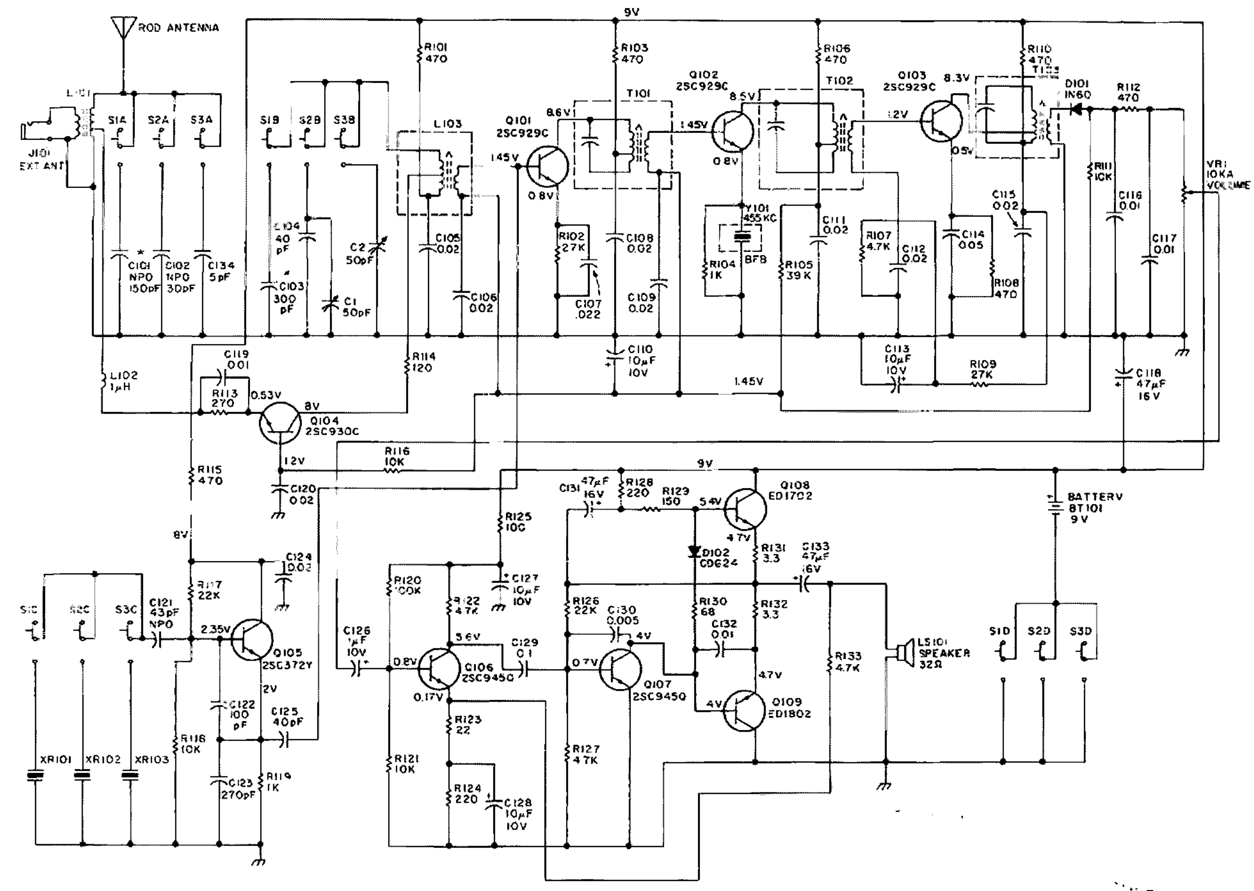

*Fig. 1. This is the complete schematic of the Timekube WWV receiver. Unless otherwise specified: resistors—in Ohms, 10% tolerance, ¼-Watt carbon; capacitors—in microfarads; voltages—dc measured with high input impedance voltmeter without signal reference to ground. *For Canadian model (12-158), C101 = 60 pF; C103 = 120 pF.*

If one purchased and used the receiver only for WWV reception, there are just two minor modifications one might consider. The antenna jack on the receiver is really an audio type commonly used for the "external speaker" or "headphone" function on a portable radio. It can be replaced by a BNC or phone plug jack for the antenna connection and is itself used as an external speaker/headphone jack.

If one considers other uses for the receiver, there is quite a range of possibilities. One of the most interesting, which requires very little modification, is to use the receiver for reception in the HF international broadcast bands. One such receiver was actually used in Europe and equipped with crystals for some VOA and BBC frequencies. So, when one wanted to hear a bit of news, etc., all one had to do was press a button and there it was. The telescoping antenna, which does not retract completely into the receiver, was removed for compactness. A short length of wire—about 5 feet—provided excellent reception.

The guts of the receiver are shown in Photo B. The whole receiver circuitry is contained on one double-sided PC board measuring slightly smaller than 11 x 7½ cm. As can be seen from the photo, changing crystals for any or all of the original three WWV crystals is not complicated. Miniature HC-25/U crystals are used and are readily obtainable from sources such as Jan Crystals at a reasonable price ($4-5). The crystal frequency is simply calculated as the desired reception frequency plus 455 kHz. The components switched in with different crystals to resonate L101 and L103 may also have to be changed depending upon how far away the new reception frequencies fall from 5, 10, or 15 MHz. For reception in the 9 and 15 MHz broadcast bands, no

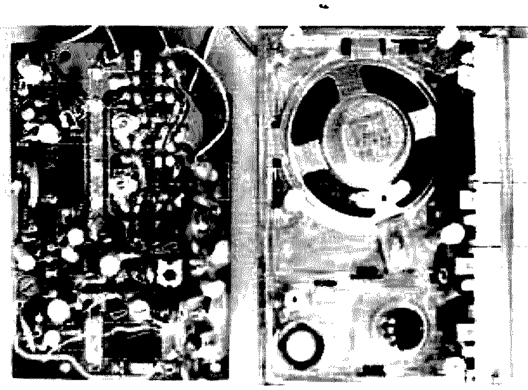

Photo B. This view shows the receiver PC board removed from the receiver enclosure. Two of the three possible crystals are installed. The bandswitch is located on the other side of the board.

components have to be changed. C1 and C2 just have to be peaked. Without changing anything except the resonating capacitors across L101 and L103, it would appear that the receiver could be used anywhere over at least the 4 to 20 MHz range.

The receiver can be modified to receive more than three crystal-controlled channels, but then the push-button switch would have to be replaced by some other form of switch—probably a rotary one. This is not as complicated as it may sound since there is adequate room in the enclosure to mount such a switch. As seen in Photo C, there is quite a bit of space left in the enclosure next to the battery cavity.

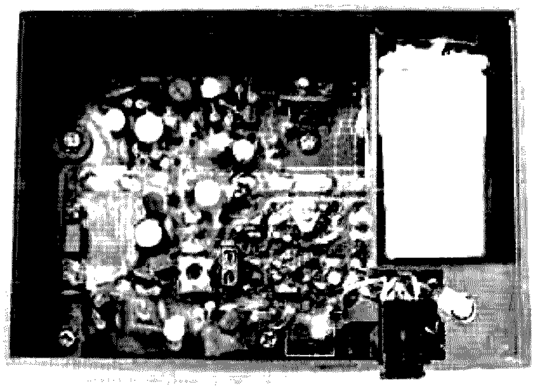

Photo C. This is a view of the receiver with the bottom cover removed. Note the space available if one wanted to add some of the accessory items discussed in the text.

A small vfo could also be installed in the space available, so one of the selectable frequency channels could be vfo controlled. If the frequency excursion of the vfo was kept relatively small, perhaps 50 to 100 kHz, it probably would suffice to just resonate L101 and L103 in the middle of the range desired rather than have them resonate by separate variable capacitors. Any one of the many HF vfo circuits available should work, but one might try first to just substitute a parallel tuned circuit for the crystal. The oscillator supply voltage should also be zener stabilized for vfo operation.

SSB or CW reception would also be possible with the receiver if the AM diode detector D101 is replaced by a simple dual diode product detector and bfo. The only other change necessary is to reduce the agc time constant or, better yet, to obtain manual rf gain control action by connecting R11 to a 20k potentiometer placed across the 9-volt battery line. Using the basic receiver as a base, anyone with a little experience should be able to develop the unit into a very satisfactory compact QRP station receiver.

As a final thought for the versatile little Timekube, one might want to build a digital clock directly into the unit. There is certainly more than enough space to do so using any one of the many integrated clock IC display kits available along with a plug-type transformer to power the clock circuitry. ■

LETTERS

from page 104

7, 9, and 0 being activated.

The FCC recently began issuing KA prefix callsigns to stations within the 48 contiguous states. That is our problem. KAs in Japan and KAs in the States!

Our QSL bureau is already receiving cards destined to stateside KAs, but our funds are limited and we must return the cards to the states via bulk mail, thus delaying their delivery.

The authorities responsible for issuing KA callsigns in Japan do plan to look into this problem, but it will probably be some time before any long-term solution can be found. Until that solution is found, we can only suggest that anyone sending a QSL to a KA should clearly mark the card to indicate whether it is destined for Japan (an APO or FPO address) or a stateside station.

If anyone has any questions or any suggestions, please contact me at the address below.

Ralph H. Fellows II KA2RF
Box 2785
APO San Francisco CA 96328

MICODER MOD

I have come upon some information which is sure to be of some use to your readers. The Icom IC-215 portable 2m FM rig, which seems to be a very hot seller this year, and the Heathkit Micoder seem to have a place together for a nice combination. But it seems that with the high impedance of the microphone and the low impedance of the radio mike input, the result is low tone volume and bad audio. This situation may be corrected by placing a resistor of about 560-680 Ohms between the white audio lead and ground inside the microphone. Results on several units thus far have been excellent.

William Michalson WB2VRJ
Clay NY

GET OUT OF THE ITU

I think you are 100% correct: Get out of the ITU before it's too late. Why Outer Mongolia with no hams and fewer radios should have the same vote as the USA is absurd. It's time this nation acted like a first-rate power instead of a fifth-rate one. I hope your editorial was read by the people who control whether or not we stay in the ITU.

Ron George K7UL
Phoenix AZ

...AND THIS ONE

I have enjoyed my last year's subscription to your magazine, but I cannot renew the subscription.

I am a member of, and support, the ARRL, and will not be a party to an organization that demeans the ARRL viciously in every issue the way your Mr. Green does. (Your cartoon does him justice—all negative.) The ARRL makes mistakes as anyone who tries to do something will do, and I will be the first to say we should point out these mistakes. But the way *73* does this—via Mr. Green's sarcastic attacks *every* month—is not the way.

If you decide to change this part of your magazine, I would enjoy subscribing again.

R. C. Cranford WA4SSI
Wallace NC

10M AM

I have seen quite a few references made to channelized 10m AM operation lately and you have also asked if your readers are interested in this type of operation. I have followed this very carefully and as yet have not read much about it in the letters column of *73*. Rest assured there are hams interested in this, even over here in Germany! I have converted a CB set using the *73* band plan, channel 1 being 28.965, and I monitor this frequency nearly every day of the week. In case any of your readers are interested, I am on the air weekdays from 1700 GMT until about 2200 GMT and on weekends from 0800 GMT until

Continued on page 127

Carl C. Drumeller W5JJ
5824 N.W. 58 Street
Warr Acres OK 73122

Gourmet Guide To Capacitors

—for that project you have cooking

Electronic experimenters and just about all builders of radio equipment use fixed capacitors in various applications. But how many know how to select the particular type best suited for a proposed use? This article will point out the factors one ought to consider while making a decision as to what type to buy. Of course, price and availability always are of major importance, but sometimes other factors should not be overlooked.

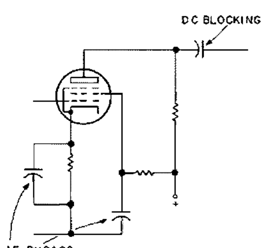

Fig. 1.

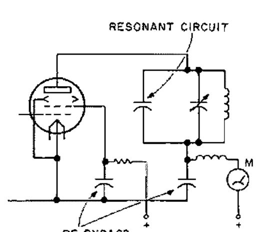

Fig. 2.

Here are some points for consideration for critical applications:

- Capacitance vs temperature
- Insulation resistance vs temperature
- Voltage vs frequency
- Current vs frequency
- Dissipation vs temperature
- Dissipation vs physical size

Add these considerations: What are you planning to use it for? Do you want dc blocking? rf bypass? af bypass? part of a time constant? surge absorption? arc suppression? You might opt for a different type for each one of these applications.

What types of construction does the market offer? Would a wound type do the job you have in mind? Or does it require flat plates of minimum inductance? Must the equivalent series resistance be low? What voltage will be put on it? Must it withstand unexpected voltage surges? Will it have to take the high circulating currents of a resonant circuit?

There's no all-inclusive answer to these many questions, but you can narrow them down to certain categories. Then, answers, or at least suggestions, become feasible.

Let's start with resonant circuits. These call for stability—good capacitance-vs-temperature characteristics. If, in a transmitter, a high-voltage breakdown will be necessary and that transmitter has any appreciable power, an ability to accommodate high circulating current becomes imperative. Satisfying such requirements usually calls for either mica or a special grade of glass as the dielectric. Be sure both voltage and current ratings are adequate. Voltage ratings are easy to come by. Current ratings, especially at the frequency you might want to operate, are not. Nevertheless, current is a critical specification for any capacitor used in a resonant circuit handling more than peanut power.

Next, let's take a look at rf bypass capacitors. These, too, may call for high-voltage capabilities, but seldom do they need to pass heavy current. Usually, low inductance is a required specification. This means short and broad leads, plus proper internal construction. You can buy acceptable rf bypass capacitors with ceramic, mica, polyester, polycarbonate, polystyrene, polysulfone, and polypropylene dielectric. Each

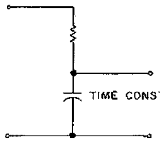

Fig. 3.

of these has some particular characteristic that makes it preferable for some specific use. None is universally superior.

If you're looking for the highest capacitance for a given physical size, then you'd pick a ceramic capacitor with barium titanate as its dielectric. Then you'd have to put up with its variations attributable to temperature, voltage, and frequency!

One of the best of the several "poly" varieties is polystyrene. It, however, has a sharp upper temperature limit of 85° C. Polycarbonate and polysulfone approach polystyrene in merit, even excelling in some respects.

Of course, if that bypass application involved high voltage, you'd opt for mica dielectric. One company, Semtech, offers a ceramic capacitor in voltage ratings of 1, 2, 3, 4, and 5 kilovolts. Their small size would make them appear to be a desirable alternative to micas.

Audio bypasses are much less critical. Although paper and a number of the "poly" types are made in capacitances as high as 10 microfarads, aluminum or tantalum electrolytics are a much more common choice. Of these two, tantalum is the better in all respects other than price.

For dc blocking use, the requirements are largely the same as for rf bypass. Voltage ratings, of course, must be high enough to take care of both the dc component plus the superimposed rf or af component. High insulation resistance is vital in blocking use.

Time-constant application, where holding calibrated values is important, calls for a superior type of dielectric. Polystyrene has an edge over competitors. For very long time constants, it may be necessary to use tantalum electrolytics in order to get sufficient capacitance, even though stability will suffer.

Surge absorption and arc suppression call for capacitors capable of handling momentary loads of both high voltage and heavy current. Not only is the type of dielectric important, but also the interior and exterior construction. The capacitor must be designed to be effective at quite high frequencies, as the spikes of voltage surges are made up of high-frequency components.

Also, it may be desirable

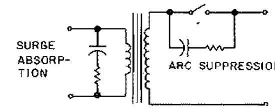

Fig. 4.

to have a self-healing type of dielectric. Metallized polyester (mylar) offers this characteristic. It's not often available in high-capacitance values, though. A few manufacturers offer it in sizes up to 10 microfarads. In all instances, it is important to have a minimum equivalent series resistance. Physical size may be important, too, for the capacitor will have to dissipate the power contained in the surges.

It's hoped that this bit of exposition on the various types of fixed capacitors may help the reader to make the optimum choice when he buys a capacitor for a specific application. ■

LETTERS

from page 124

about 2300 GMT. I frequently give calls on the frequency and monitor constantly.

Surprisingly, there is quite a lot of AM activity on 10 over here using low power. There are many local rag chew groups and coverage throughout Europe is quite good at times. Recently, conditions were such that stations in Berlin were heard working mobiles and fixed stations as far north as Hamburg. I hope to work some stateside DX one of these days.

Richard J. Molby
DA1DB/WB7NZG
APO New York NY

SUPER TAPES

Just this past Wednesday I went to Albany NY and took my General exam and passed it. If it hadn't been for those *73* code tapes, I don't think I would have been able to pass the code part. You were right! If it hadn't been for my nerves, I would have gotten 100% copy. As it was, I did manage to get 100% on the code test. Keep up the good work on the mag.

Dave Kessler WB2JUJ
Hoosick Falls NY

DON'T FORGET GOGGLES

With reference to W7RXV's article in the July, 1978, issue of *73* entitled "Instant Engraving—to protect your equipment," I hope readers realize that if they use this method for engraving, they must also protect their eyes. Glowing carbon rods and arcs from such rods emit dangerous ultraviolet rays which will damage the eye. I would strongly suggest to those who can still read this magazine that they wear good quality ultraviolet protective goggles while using RXV's etching method. This is a precaution I have learned in college while using a carbon arc lamp to expose photosensitive circuit boards.

James T. Schug WA2YEI
Middle Village NY

GRIPES

In a recent issue of your fine magazine, you made a comment about the "Canadian" portion of the 20 meter phone band (14.1 to 14.2). I think it might be a little more justified if your phone band expanded to 14.125, leaving 25 kHz as a little breathing room for our 15,000 amateurs.

On another subject, we in Canada are finding, just as you did, that it is almost impossible to fight the ARRL. The League has used its large financial backing to attempt to kill our only national organization (Canadian Amateur Radio Federation) ever since it was devised. How would you feel if, for example, the national organization of Mexico tried to represent the USA amateurs in front of the FCC? Well, that is what the ARRL is attempting to do in Canada. They have gone as far as to call themselves "The Canadian Radio Relay League." I could go on for a whole book, Wayne, but I just wanted to let you know that you weren't the only one with gripes.

Rob Bareham VE3ACY
Ottawa, Ontario
Canada

Write the book, Rob, and let hams know what the ARRL has done in Canada.—Wayne.

Ham Help

I am interested in obtaining my Novice class amateur radio license. Any help would be greatly appreciated. Thank you.

Hugo Harmatz
2 Ferris Ct.
Oakhurst NJ 07755

I would like to exchange technical ideas with anyone interested in the 160-190 kHz band.

Ted Swift WB7OQQ
Rt. 1 Box 5248
Richland WA 99352

Bob Engle K9QLL
Box 73
Alsey IL 62610

The ARC Tuner

—*rejuvenated surplus*

A recent article on antenna tuners entitled "The London Bus Tuner," *73 Magazine*, June, 1977, provided the final push for this tuner. I believe that it meets the criteria for an inexpensive, yet flexible, tuner for power levels up to 500 Watts and from 160 through 10 meters, depending on the configuration. It also provides for simple packaging and convenience of readout with a minimum of mechanical gimmickry. The only parts needed, in addition to an ARC-5 transmitter, are a 4½" by 6½" piece of Plexiglas™, a 1" piece of 3/8" dowel (plastic or wood), and one or two chassis-mount coax connectors. The ARC-5 is available from Fair Radio Sales, Box 1105, Lima OH 45802, as a BC-457 for $14.95.

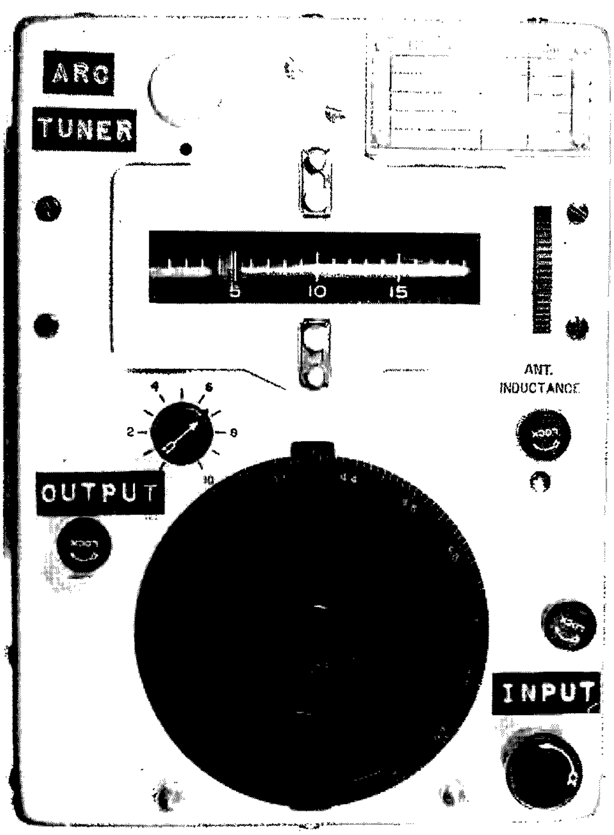

Front view of completed tuner.

Most of the configurations in the Bus Tuner article may be used with this setup. Fig. 1 shows the tuner wired in a configuration similar to Fig. 1(c) of the Bus Tuner article and I found this meets most of my needs.

The only special tool required is a bristol wrench needed to remove the gear from the antenna coupling coil and the hardware from the PA padder capacitor. However, a small-bladed screwdriver may be filed down to fit.

The first step is to strip the chassis, leaving only the rotary inductor, PA tuning capacitor, and antenna coupling controls. Save all hardware and parts until the project is completed—the total time required should be less than four hours.

Strip the chassis as follows: Remove top and bottom covers, remove tubes, crystal, antenna relay, and its associated hardware. Carefully remove the antenna binding post and reassemble it so that the parts are not lost. Remove the antenna contact from the end of the rotary inductor—do this carefully as the ceramic threads are fragile. Replace the screw that holds the spring clip on the end of the coil. Remove the PA coil. Carefully remove the fiber gear from the PA coil—use solvent (or nail polish remover) to loosen the two setscrews before trying to remove them. Set the gear and setscrews aside—these are an important part of the finished product!

Remove the oscillator cover, padder capacitor, and coil. To remove the coil, remove the three screws holding it, lift up gently, and cut all the leads going to the bottom of the coil.

Turn the unit over and remove the pin (I used a small finishing nail as a punch) from the flexible shaft at the front capacitor. Save this pin.

Remove the rear variable capacitor. Remove the PA padder capacitor (second variable from the front).

Now remove the tube sockets, rear power plug, relay, all wires, the resistor

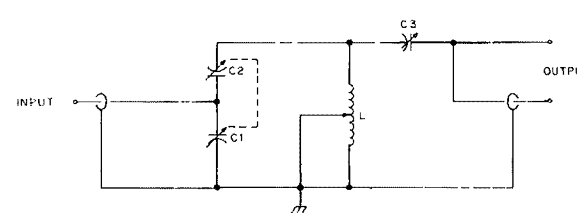

Fig. 1. ARC tuner schematic diagram.

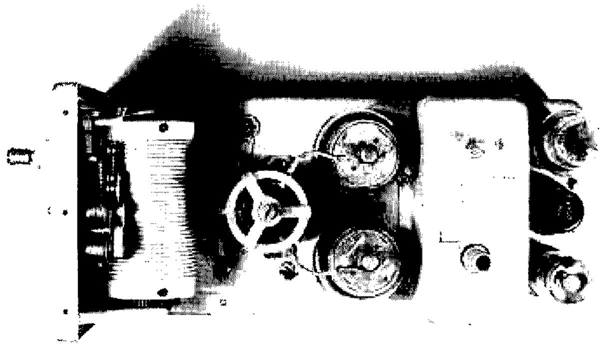

Top view of unconverted ARC-5.

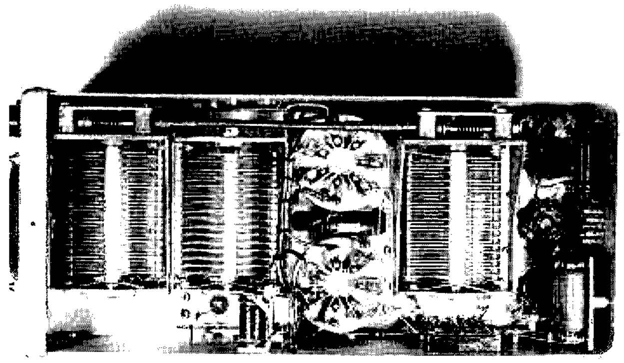

Bottom view of unconverted ARC-5.

on the rear panel, and the bracket that held it. Also remove the mica feed-through and the widgets that hold the oscillator coil cover in place. The transmitter tube sockets, feed-throughs, and power plug on the rear apron must be "persuaded" off with a hammer and screwdriver.

Modify the chassis as follows: Cut out a 4" by 4" section of the top of the chassis starting about 3/8" in front of the tube socket holes at the rear of the chassis. Part of this hole will include the space left by removing the PA tube sockets.

If you want coaxial output in addition to single-wire feed, make a 5/8" hole on each side of the power plug hole on the rear apron—one hole for the coax connector, the other for the antenna binding post. Of course, the post can be used in its original hole if desired. Remove the large hole plug from the side of the chassis and use it to fill the hole in the front panel left by the antenna post.

Remove the locking hardware from the PA padder capacitor. Use solvent (or nail polish remover) to loosen the setscrews.

You must now drill out the fiber gear to fit on the shaft of the PA padder. Do this very carefully, clamping it in a vise on the metal part only. DO NOT drill all the way through. A mistake might be rectified with epoxy glue.

Mount the gear on the PA padder capacitor. Lubricate the bearings on this capacitor as they will be a bit stiff (WD-40 works fine).

Now, place the 4½" by 6½" piece of Plexiglas on top of the chassis and place the PA padder on it so that the gear meshes with the gear on the antenna coupling control. Mark the position of the capacitor and the mounting holes. Remove the Plexiglas and drill these holes. Using the Plexiglas as a template, drill two large (5/8" or so) holes in the chassis to provide clearance for the mounting screws on the front of the PA padder capacitor.

Mount the Plexiglas on the chassis and mount the PA padder capacitor. It should operate freely with no binding as the antenna coupling control is operated through its range. If the mounting holes are made slightly larger than the screws, the capacitor may be adjusted to provide a good mechanical fit.

The next step is to modify the flexible coupling shaft. Remove the shaft from the capacitor by removing the pin. Make a mark 1" from one of the metal ends of the shaft and 1¼" from the other end. Measure from where the metal coupling connects to the flexible shaft material. Solder around the shaft at each mark—this prevents the shaft from unraveling. Then cut the shaft to the marked length. Make the insulated coupling by drilling a 3/8" deep hole in each end of the 1" long piece of plastic or wood dowel. Use a number 25 drill.

Apply epoxy glue and force each end of the flexible shaft into the coupler. While the glue sets, remove the third fastener on the right side of the bottom plate—this is a safety measure to prevent the

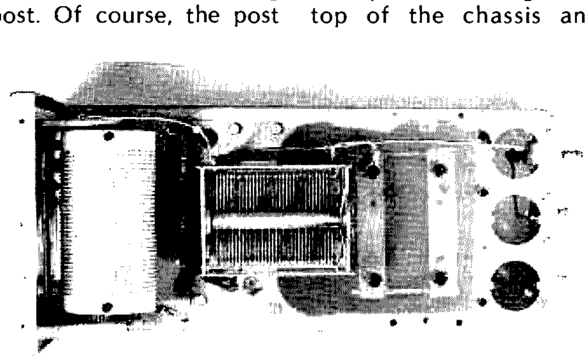

Top view of completed tuner.

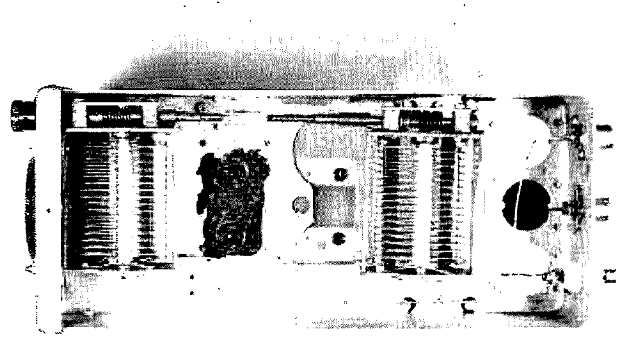

Bottom view of completed tuner.

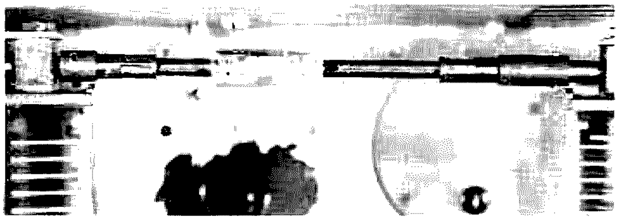

Flexible-shaft coupler details.

capacitor from arcing to ground.

Reassemble the flexible shaft to the capacitor and put it in place in the chassis. Set it slightly further away from the wall than the original mounting position (the flexible shaft will make up for the misalignment). Drill the holes and mount the capacitor.

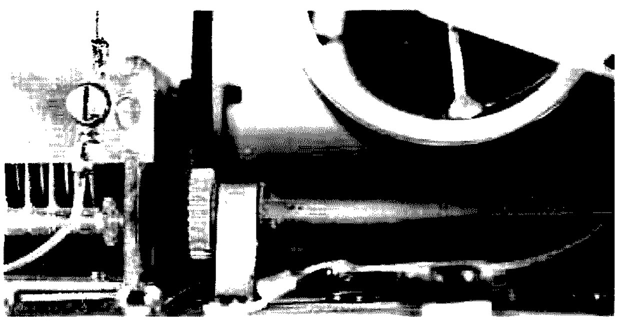

Padder gear assembly details.

Make sure that both capacitors are set the same before replacing the pin. The capacitors should now track as the frequency control is tuned through its range.

Mount the antenna post and one coax connector in the 5/8" holes on the rear apron. Mount the second coax connector in the power connector hole. Use a round file to file notches to clear the mounting hardware. Also mount a bolt or binding post on the rear apron for a ground connection.

I used the wire from the PA and oscillator coils to wire the unit. Ground both ends of the roller contactor using solder lugs and the existing holes. Place a solder lug under the screw holding the spring clip on the end of the roller inductor. Also place a solder lug under one of the mounting screws on the rear capacitor.

To use the tuner, set the capacitors to maximum (lowest frequency on the dial and 10 on the coupling indicator) and apply only enough power to get a reading on the swr indicator. Adjust the coil and then the capacitors for 1:1 swr. Record the tuner settings on the handy chart provided on the front of the unit.

If you buy a used ARC-5 that has been sitting in a barn for a few years, a thorough cleaning will be in order. Use a pencil eraser to clean the rotary inductor, the rotary contactor, and the rod on which the contactor rides. Lubricate the capacitor bearings and the drive shafts and gears.

I would like to thank K9OIC for testing the various models of this tuner and for providing unflagging support for this project. ■

OSCAR Orbits

The listed data tells you the time and place OSCAR crosses the equator in an ascending orbit for the first time each day. To calculate successive orbits, make a list of the first orbit number and the next twelve orbits for that day. List the time of the first orbit. Each successive orbit is 115 minutes later (two hours less five minutes). The chart gives the longitude of the first crossing. Add 29° for each succeeding orbit. When OSCAR is ascending on the other side of the world, it will descend over you. To find the equatorial descending longitude, subtract 166 degrees from the ascending longitude. To find the time it passes the North Pole, add 29 minutes to the time it passes the equator. You should be able to hear OSCAR when it is within 45 degrees of you. The easiest way to do this is to take a globe and draw a circle with a radius of 2480 miles (4000 kilometers) from the home QTH. If it passes right overhead, you should be able to hear it for about 24 minutes total. OSCAR will pass an imaginary line drawn from San Francisco to Norfolk about 12 minutes after passing the equator. Add about a minute for each 200 miles that you live north of this line. If OSCAR passes 15 degrees from you, add another minute; at 30 degrees, three minutes; at 45 degrees, ten minutes. Mode A: 145.85-.95 MHz uplink, 29.4-29.5 MHz downlink, beacon at 29.502 MHz. Mode B: 432.125-.175 MHz uplink, 145.975-.925 MHz downlink. beacon at 145.972 MHz.

Oscar 7 Orbital Information

Orbit	Date (Sept)	Time (GMT)	Longitude of Eq. Crossing °W
17355 Bbn	1	0011:41	61.9
17368 Bbn	2	0105:58	75.5
17380 Abn	3	0005:19	60.3
17393 Bbn	4	0059:36	73.9
17406 Bbn	5	0153:53	87.5
17418 Abn	6	0053:14	72.3
17431 Bbn	7	0147:31	85.9
17443 Bbn	8	0046:52	70.8
17456 Abn	9	0141:09	84.4
17468 Bbn	10	0040:29	69.2
17481 Bbn	11	0134:47	82.8
17493 Abn	12	0034:07	67.7
17506 Bbn	13	0128:25	81.3
17518 Bbn	14	0027:45	66.1
17531 Abn	15	0122:02	79.7
17543 Bbn	16	0021:23	64.5
17556 Bbn	17	0115:40	78.1
17568 Abn	18	0015:01	63.0
17581 Bbn	19	0109:18	76.6
17593 Bbn	20	0008:39	61.4
17606 Abn	21	0102:56	75.0
17618 Bbn	22	0002:16	59.9
17631 Bbn	23	0056:34	73.4
17644 Abn	24	0150:51	87.0
17656 Bbn	25	0050:12	71.9
17669 Bbn	26	0144:29	85.5
17681 Abn	27	0043:49	70.3
17694 Bbn	28	0138:07	83.9
17706 Bbn	29	0037:27	68.8
17719 Abn	30	0131:45	82.4

Ham Help

Help! I built the noise bridge of Floyd Jones W6DOB (*73*, April, 1978), but *nobody* has *miniature 360 pF* variable capacitors anymore. The junked radios I have used are either old, full-size ones, bigger than the rest of the components put together, or minis that are short by 100 or so pF. I would appreciate hearing from someone with a larger junk box. Radio Shack no longer carries theirs, which were pretty inexpensive.

I am also trying to locate surplus or used components for a transmatch—I don't believe current prices for new coils and capacitors!

Walter Kimmel
Box 56
Ponsford MN 56575

I am interested in hearing from other hams and computer enthusiasts in the northern New Jersey area who are interested in starting a GMRS (formerly Class A CB) repeater. I have station authorization and an excellent site.

Tony Loving WB2TMX
72 Shepard Avenue
Teaneck NJ 07666

I am turning to the amateur radio community as my only possible route to reach a fellow with whom I was close friends over 10 years ago, but haven't heard from in some time. I don't know his present call but he got his Extra about 1968. His name was Philip Staub, of the Benton Harbor, Michigan area, in his high-school days. I would very much appreciate hearing from him directly or from any acquaintances having his current mailing address or phone number. Thanks for your service.

James Finckbone
PO Box 6464
Orlando FL 32853
(305)-894-7814
(305)-275-1607

I acquired an RT-654A/TRC-77, government issue, crystal-controlled CW transceiver at the BirmingHamfest in May. I'd be very grateful to anyone who could clue me in on how the unit operates, or who has any manuals on this gear. Thank you.

Bob Howle WA4ZID
2710 Niazuma Avenue, Apt. 1
Birmingham AL 35205

Julian N. Jablin W9IWI
9124 North Crawford Avenue
Skokie IL 60076

Home-Brew Circuit Boards

—cheap and simple

Hand wiring circuit boards is a not-uncommon means of making quite satisfactory boards which can match in effectiveness, if not always in appearance, those which have been etched. It is the purpose of this article to pass along some ideas which have worked for me to make the job easier and/or more economical.

Some projects in which the usual procedures of applying a resist (mechanically or photographically) and then etching do not pay, include: one-of-a-kind devices with complex patterns, those for which commercially-available boards are not available or are inordinately expensive, those in which the builder wishes to make changes from a published design, and those for which the builder does not have facilities for applying resist, etching, and drilling. Of course, there is always the tinkerer who stubbornly insists on doing a job in his own way, trying something new and different from the established methods of handling a project.

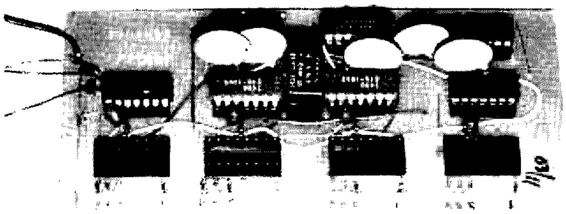

Jumper wires on the component side of the board are useful at times to avoid too much clutter on the foil side. Push-in terminals (Radio Shack 270-1392) were used here as junctions for anchoring the light-colored 5-volt line, and as soldering points for connection to the IC sockets on the other side of the board. Terminals are also used along the front edge of the board to bring out leads which will later be soldered to them. Board here is 2-1/2" × 5-1/4".

One has to start with a board of some kind. The phenolic, prepunched board sold by Radio Shack (catalog 276-1395) for 99¢ is good, given the shortcomings of phenolic. It is punched .100 × .100 inches for IC sockets and other small components. This is a 2-3/4" × 6" board and two larger sizes are also sold. You will probably need to cut boards to size for specific use; a fine hacksaw or model railroad track saw works well with phenolic or epoxy boards.

Higher-quality board, usually glass epoxy, is available as surplus cards from computers and other devices. The trick here is to buy boards which have high-density packaging so that there are many ICs mounted on them. This leaves a lot of holes from which to select when you come to arranging your own layout. I once found an 8-1/2" × 14" board which included 82 ICs, neatly arranged in rows, plus a 1.8 MHz crystal and associated transistors, capacitors, and resistors, all for $1.75. A better buy was an etched board without any components for a couple of cents. Cut into pieces (after the components were removed from the first board), these boards have provided numerous smaller boards for various projects.

A surplus board must be cleaned off. Removing the capacitors and resistors is an easy trick, even if you want to be careful enough to use them again. Slip a small screwdriver under the component, heat one lead on the other side of the board, pry up gently, and repeat with the other lead. Test all items before using them again. You don't know *why* the board was declared surplus.

ICs are another matter. It is almost impossible, without a special soldering iron, to heat seven or eight pins all at once. The solder can be removed with one

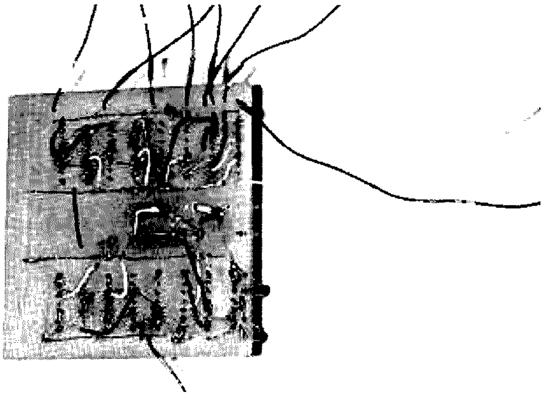

Bare wire can often be used to an advantage, as shown in the thin horizontal lines on this board. The center two lines are the 5-volt dc supply; lines at top and bottom edges are common bus. Leads coming off the board also show small sleeves of colored insulation slipped on for color-coding. Board is three inches square.

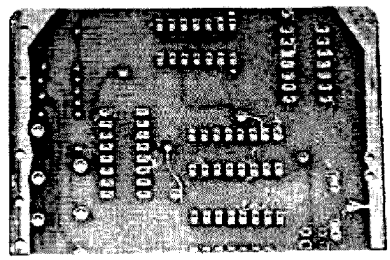

Section cut from a larger computer board and then etched clean, leaving pads for anchoring IC sockets, foil strips on edges for ground bus, as well as other leads which seemed to be useful. Board is 2″ × 3½″.

of the de-soldering "wick" products on the market. I use small size shielding from unwanted mike cable or the like, dip it in soldering paste, lay it on the line of pins, and heat it with an iron. It sucks the solder up so that the IC can be pried off, one side at a time. The heat is likely to ruin the ICs, of course, but these are usually house-numbered and you do not know what they are; thus, they are of no use to you anyway. If you have facilities for determining IC types, you would probably be testing the devices at the same time, so you can discover what they are and whether they are good all at once.

Now you have a board with a lot of empty holes and connections among them, and the next job is to remove the excess foil. The quickest and easiest way to do this is to dump the board (or any portions that you have cut off for use) into PC etchant and let it do its dirty work. Dab spots of resist (fingernail lacquer, paint, candle wax, etc.) on the pads at each IC location. This will permit the pads to remain while everything else is etched away, and will give you something to anchor the IC sockets to when you begin soldering your own circuit. It may be handy to save a ground (common) bus, or pads for external connections to the board, if these will not get in your way. I have tried to compare the pattern on a board with the pattern of a circuit on which I am working, in an effort to save any connections which may be useful, but I do not recommend this. Especially on a double-sided board, or in a complex circuit, it is the road to instant insanity.

Follow the safety notes and instructions on the etchant bottle carefully. The stuff stains hands and clothing, and is definitely injurious to eyes and other sensitive skin areas. It is convenient to have a pail of water handy to dip the board into as a rinse to check things as you go along. Likewise, it is worthwhile to use a pair of plastic tweezers (photo print tongs, for example) to handle the board in the solution. Do not bother to heat the solution according to the instructions unless you are in a hurry. When all of the unwanted foil has etched away, wash the board, clean off the resist with chemical solvent, a "Rescue" pad, or with fine steel wool, and wash the board again.

I am a great believer in IC sockets because I am not a believer in the specs of the bargain ICs I buy. Sockets are cheap—30¢ or less by mail—and they save hours when you have to change the ICs around to find which ones do not work. Molex sockets are a dubious bargain. They do not slip into the holes easily, and, after a few insertions and removals, they are not reliable. At first glance, it would appear that IC sockets with long pins for wire-wrap applications would be easier to solder to, but I find that the extra length gets in the way of precision work and I wind up with two or three pins soldered together.

A word about the holes in the board. You will find many of them plugged with leftover solder, and you will find need for a few where the original manufacturer neglected to foresee your requirements. Stop at your friendly neighborhood hobby shop and buy a couple of fine drills; number 62 or smaller is good. At the same time, if you do not have one, get a cheap pin vise. With this combination, you can ream

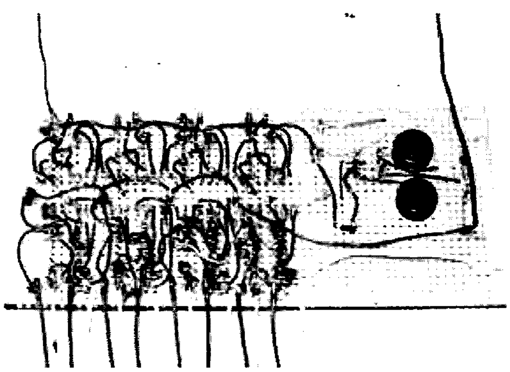

Circuit built on a 3″ × 6″ Radio Shack board 276-1395. It looks like a rat's nest of wiring, but color coding and a little care made everything come out right. This kind of sloppy wiring is permissible only when there is no rf or audio circuitry involved.

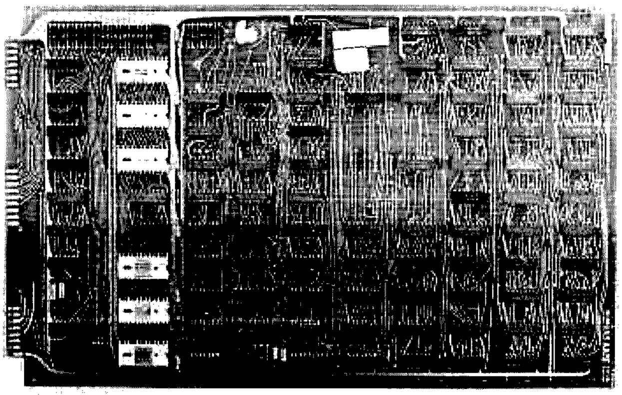

One example of the "raw material"—a surplus computer board measuring 8-1/2" × 14". ICs are not removed until a smaller piece is hacked out for a specific purpose. More than three dozen resistors, diodes, capacitors, and transistors were carefully taken out for future use. A board such as this would make an excellent "mother board" for a project which is made up of several smaller modules.

out plugged holes and drill new ones. You can do this while holding the board in one hand and the pin vise in the other, and thus make holes after you have begun mounting components. You cannot do this safely with a hand drill or drill press.

At the hobby shop, you can also get a small egg-beater-type hand drill made by X-Acto® which is light and, if handled carefully, will not break too many of the little twist drills. However, buy several twist drills at a time as they go fast!

The wire that you use should be as fine and as flexible as you can find. Teflon™ insulation is good for resisting any tendency to shrivel up when the heat of soldering hits it. Again following the surplus route, I have had luck in finding cables made up of many leads of fine stranded wire, number 24 or 26 or so, with various colors of insulation, which I have separated into individual leads. Solid wire is a nuisance.

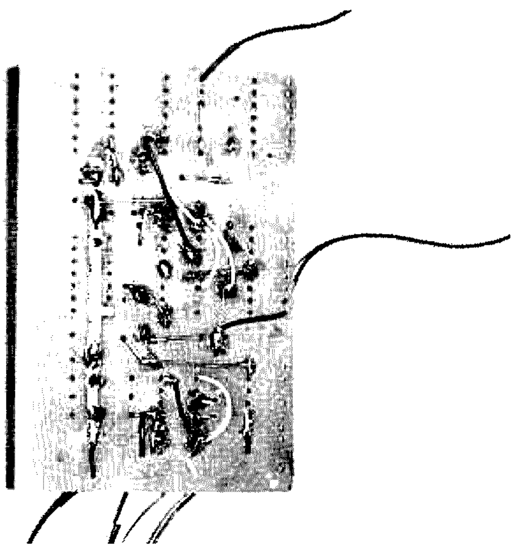

Unused holes which remain after etching a board clean may be used to anchor leads and other components. On this 2-1/4" × 3-1/2" scrap of board, a strip of foil was allowed to remain as a ground bus. Etchant crept under the resist, leaving a ragged edge, but enough foil was left to be useful.

Wiring this kind of board by hand is admittedly no fun. There are too many repetitious operations, since so many ICs use the same connection schemes. After a while, it becomes a question of "Did I wire pin number five and which pin is number five?" If you have an etching pattern for the device, make a Xerox® copy of it to follow, inking in each connection as you solder it. If not, do the same on a circuit diagram. Yes, this is the same way that beginners did it in the old days of metal chassis and 240-volt transformers, but it works.

Solder two or three corner pins of each IC socket to the pads which you thoughtfully left on the board. This will hold the sockets in place while you get down to serious business. Then, again following the old octal socket tradition, wire in the "high-voltage" leads first, then the ground (common) leads. After that, tackle the rest of the wiring.

As with any other complex wiring job, color coding will help keep matters straight so that you know where you are. I use yellow or red for Vcc, black for common, and one or two additional colors for other leads. Leads coming off the board for interconnection to other boards, switches, etc., must be color-coded or you can get hopelessly lost. If you do not have enough colors of insulation for this, use bits of colored insulation from larger sizes of wire, slipped on the leads and snugged up against the board end of the leads. And make notes as you proceed, reminding yourself of what each color indicates.

You will want a wire stripper, and the small plier-type with a notch to cut the insulation, but not the wire, works well. Set the closure adjustment carefully, since you cannot afford to take any strands of wire off with the insulation. There is not that much wire! Other handy tools include a couple of small screwdrivers, small long-nose pliers, a small pair of diagonal cutters, a small soldering iron, and possibly a small file. The key word in the whole operation is "small."

Preform the leads before you solder them in. Strip about 3/8 inch of insulation, tin the end of the wire, cut the lead to approximate size, then strip and tin the other end. Bend a hook in each end small enough to fit snugly on the IC socket pin and solder it on. Where leads are in the clear, with no possibility of shorting to other leads or pins, you can strip and tin a longer piece of wire. Bend a hook in it as before, solder it to a pin, pull it against whatever else it is to be connected with, solder it, and clip off the excess. This speeds things up a bit. If you have an etching pattern, try to follow it fairly closely with your wire leads. The designer may have had some reason for lead placement.

A circuit board wired in this manner will probably win no prizes for neatness, and some unkind friends may compare it with a rat's nest. But the system works and is a suitable substitute for drawing artwork, sensitizing, exposing, developing, etching, and drilling boards, which may be beyond the experimenter for one reason or another. ■

Carl C. Drumeller W5JJ
5824 NW 58
Warr Acres OK 73122

73 Reveals Bias!

—transistor operation exposed!

Much mystery is attached to what, in most instances, is quite a simple subject. That subject is the biasing of bipolar transistors.

Let's look at a transistor in a circuit with no biasing, as in Fig. 1. As it stands, no collector current will flow unless, of course, the collector voltage is raised past the breakdown point. We'll consider operation only

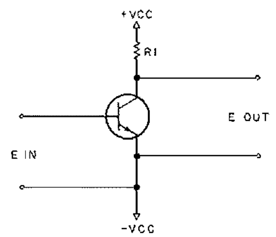

Fig. 1. Transistor with no bias provided.

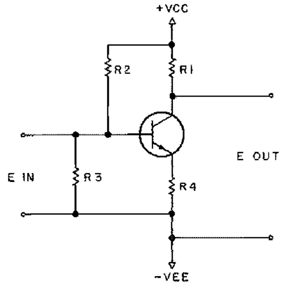

Fig. 2. Typical transistor biasing arrangement.

under normal voltages. If you were going to use that transistor in class B service, whether radio frequency or audio frequency (we'll ignore distortion!), it will operate without bias. It's often used that way. You could apply some bias between the emitter and the base, being careful to have the opposite polarity on the base as on the collector, and operate it class C. However, you'd gain very little over class B operation. The transistor might run a little cooler, the radio frequency power output (for a given power input) might be a trifle greater, but you'd pay a price. That price would be a much greater generation of harmonics. At their best, transistors are notorious generators of harmonics. Many users hesitate to encourage them by biasing to class C.

But suppose you want to run that transistor in audio frequency service, operating in class A. Now you're concerned with getting a maximum voltage swing between collector and ground (presuming the "common- or grounded-emitter" configuration) while maintaining precisely the same waveform at the output as at the input, differing only in magnitude. This calls for biasing —not just any biasing, but careful biasing, with each move made to accomplish a desired result.

Let's look at Fig. 2. Note that three more resistors have been added. R1 remains between collector and +Vcc. R2 has been added between +Vcc and base. R3 is connected between emitter and −Vee. R4 goes between base and −Vee. The numbers assigned to these resistors are not haphazard. They're assigned in order of importance. The circuit will not work without R1. It will not work in class A without R2. It will work better in class A with R3. And the transistor derives some protection from R4.

What should the values be for these resistors? Really, there's nothing sacred about their values. You start out by selecting some figure for R1. It can be just about anything between 1k and 20k Ohms. Let's say 5k Ohms. Now you could toss in R2, making it some value large enough to permit only a moderate flow of current through R1, but never over half the rated collector current. The circuit would work, but its long-term and short-term stability would be poor and there'd be a high probability of audio distortion. To make the circuit more stable and to lessen distortion, you'd need to add R3. Its value, however, is affected greatly by R4 and R2. Let's consider R4 first.

R4 is in the circuit for two reasons. One is to lessen the chance of thermal runaway. As a transistor warms up (for any reason at all), its collector current increases. This causes it to get warmer, which pushes the collector current even higher. You can see the outcome of such a rat race. To halt the rat race, R4 is inserted. As the emitter-collector current goes higher, so does the IR drop across R4. The polarity of this drop is such that, applied between base and emitter, it tends to reduce the collector-emitter current. This, to a great extent, cancels the effect of heat on the transistor.

There's another, but less important, effect. By putting a linear resistor in series with a nonlinear resistor (the transistor), variations of the characteristics of one resistor to another are, to some extent, smoothed out. This is

important to a manufacturer but makes little difference to a one-of-a-kind builder.

What resistance for R4? There's a wide latitude. Keep it less than 10 percent of R1. If you made R1 5k Ohms, try 200 Ohms for R4. With both R1 and R4 established, you're ready for serious consideration of R3 and R2. Start with R3. Just how heavily do you want to load the device (amplifier stage, microphone, etc.) driving this particular transistor? Keep in mind that the base-emitter junction resistance is going to be quite low, so there's no need to try for a high input resistance. So just pick some value around 2k to 5k Ohms.

Now you're ready to tie down the all-important value of R2. There's no way you can make an accurate guess for R2. Oh, you can say it'll probably be between 5 times and 10 times R3, but such an estimate will not ensure maximum undistorted output. There's just one way of doing that, and that way entails the use of an audio frequency sine wave generator and an oscilloscope.

Connect the equipment as shown in Fig. 3. Apply a very small audio frequency voltage to the input and observe the output on the scope. The image should be a sine wave. Now increase the input voltage until the scope waveform shows a flattening of one peak, positive-going or negative-going. Adjust the resistance of R2 to restore the waveform to an undistorted sine wave, then increase the input voltage until distortion shows again. Repeat this sequence until the waveform shows equal, simultaneous flattening on the positive-going and negative-going peaks. Measure the resistance of R2 and place a fixed resistor of that value in the circuit. Now you have a class A transistor audio amplifier stage custom-trimmed for maximum undistorted output!

If you have an acute ear tuned to detect audio distortion, you might make that final adjustment without a sine wave generator and an oscilloscope. A nonchalant disregard for niceties also helps! But for near perfection, follow the suggested procedure. If you're concerned with a transistor in class A radio frequency service, the procedure is equally effective, provided, of course, that you maintain equal loads for both test and use conditions. An rf stage adjusted in such a manner will be less susceptible to being driven into distortion by a strong signal near the desired signal.

All in all, it's well worth your while to set the bias correctly for a transistor stage operating in class A. ■

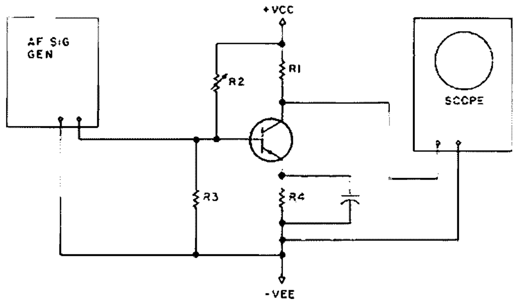

Fig. 3. Test setup for bias adjustment.

CB to 10

—part X: Realistic's Mini 23

Leland H. Agard K5LUW/K5SA
Route 5, Box 735
Starkville MS 39759

The CB boom is just about over. The suppliers are trying to unload warehouses full of new 23-channel CB radios at any price the market will pay. In many instances, the CB antenna will cost more than the radio — amazing but true.

I was in the local Radio Shack store and noticed that the new Realistic Mini 23 CB radio was selling for $29.95. This had to be a bargain, as this radio normally sold for $109.95. I thought this radio would be an excellent candidate for converting to ten meter AM, and, at that price, I could butcher the radio all I wanted to and still not feel bad about it. Let me say at this point that, although I think I made a good buy for the amount of electronics I was getting, I have found out that there are better deals to be had. The used CB market is virtually nonexistent and an enterprising ham can find a broken CB rig for $5.00 or less. At these prices, it will be hard to go wrong when purchasing a CB rig for conversion to ten meters.

With new two meter rigs costing $200.00 and more and new CB rigs selling for one tenth of that amount, it should not be long before ten meter AM is just as popular as two meter FM. All that is needed is a little coordination to keep everyone on the same frequency.

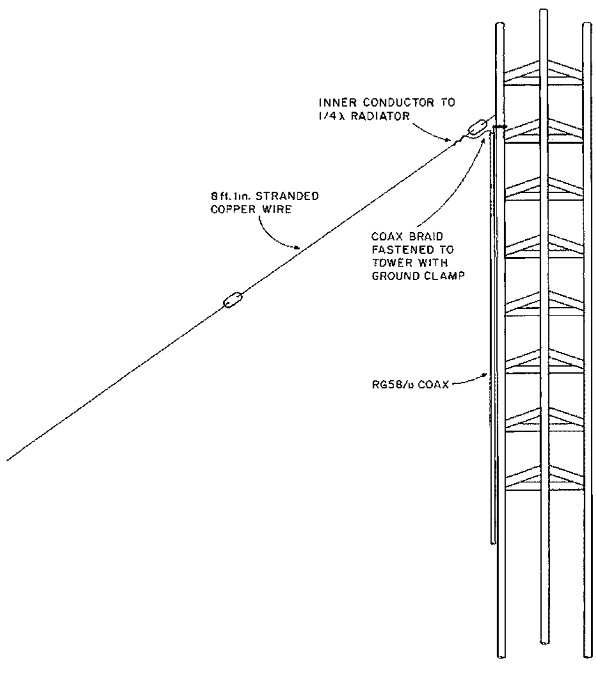

Fig. 1.

Frequency Conversion

Upon investigating the schematic of the Mini 23, I noticed that the frequency scheme for obtaining 23 channels was simply heterodyning any one of six master oscillator crystals against any one of eight local oscillator crystals to obtain the desired frequency. The local oscillator crystals range from 10.150 MHz to 10.180 MHz and 10.595 MHz to 10.635 MHz in 10 kHz steps. The master oscillator frequencies range from 37.600 MHz to 37.850 MHz in 50 kHz steps. In order to come up with a workable plan and in order to purchase the fewest number of crystals, I decided to change the frequency of the master oscillator by 2.035 MHz. This puts channel 1 on 29.000 MHz. This is a nice round number, and it seems that the higher frequencies formerly were used for AM operation. This is accomplished very easily by changing the crystals as shown in Table 1. The new crystals can be purchased from International and other manufacturers for around $4.95 each. This puts the rig on frequency in the ten meter band.

Transmitter Alignment

The transmitter section is peaked up using a VTVM and a wattmeter and dummy load. The probe of the VTVM is connected to the base of Q12, and the oscillator is peaked for maximum output by adjusting T10, T11, and T12 for maximum voltage on the VTVM.

The driver is peaked by connecting the VTVM probe to the base of Q14. Once again, key the mike and then adjust T13 for maximum voltage, and next adjust T14 for maximum voltage on the VTVM. This peaks up the driver section. At this point, some rf output should appear on the wattmeter.

Tune the final by adjusting T15 and T16 for four Watts output on the wattmeter. Do not try to tune the final for maximum output on the wattmeter. The transistor will put out more than seven Watts but, in order to do so, will pull excessive collector current, and the transistor will not hold up to this abuse. The final transistor will open. Take my advice and tune for no more than four Watts out. I know because I learned the hard way and now am using a replacement final transistor.

Receiver Alignment

The receiver can be aligned by using a signal source such as your regular station transmitter tuned to 29.000 MHz and fed into a dummy load or any other suitable weak signal source, such as a nearby ham transmitting on 29.000 MHz. The Mini 23 does not have an S-meter, so I connected the VTVM probe to diode D3, which is the AM detector. It then becomes a simple matter to tune T2, T3, T4, T5, and T6 for maximum voltage on the VTVM. This completes the conversion, and the rig is now ready to go on ten meters.

Antennas

For mobile use, I took a used base-loaded mobile CB antenna and simply started

trimming the whip until I reached an swr of 2:1 while operating on ten meters. On the whip I was using, I took a little more than two and a half inches off. This will vary with different types of mobile antennas, of course, and a good method is to insert the swr bridge in line and trim until a good match is obtained. The frequency change of 2 MHz or so should work out okay with most mobile whips that are base loaded.

For a base station setup, any existing ten meter antenna could be used, even a trimmed down CB ground plane. I wanted an independent rig and did not want to tie up my ten meter beam with the little rig, so an extra ten meter antenna was a must. I finally decided on the sloper-type antenna shown in Fig. 1. This antenna is easy to install, is small, is cheap to build, and is vertically polarized for working mobiles. The sloper should be cut for the middle of the group of frequencies you are using. In my case, it worked out to be eight feet and one inch for just a little below 29.000 MHz. The inner conductor of the coax feedline is attached to the quarter wavelength radiator, and the braid of the coax is clamped to the tower leg using a ground clamp. This system works quite well and cuts the length of the sloper in half.

Results

The ten meter AM rigs compare very favorably with the two meter rigs. The cost is drastically lower, but range seems to be about as good. Mobile-to-mobile coverage is about three miles, and mobile-to-base coverage is six to seven miles. With base station-to-base station contacts running four Watts output and sloper antennas up forty feet at both ends of the path, consistent ground wave coverage of better than 20 miles is maintained. Indeed, it seems that ground wave on this band is about equal to line-of-sight paths on two meters. This is a great club project to bring all those members back together on some common ground. It is also a good project for a couple of guys who just want a little privacy to discuss the stock market or whatever. For under $60.00, this is a good way to keep ten meters alive. See you on ten AM. ■

Crystal	From	To
X1	37.600 MHz	39.635 MHz
X2	37.650 MHz	39.685 MHz
X3	37.700 MHz	39.735 MHz
X4	37.750 MHz	39.785 MHz
X5	37.800 MHz	39.835 MHz
X6	37.850 MHz	39.855 MHz

Table 1.

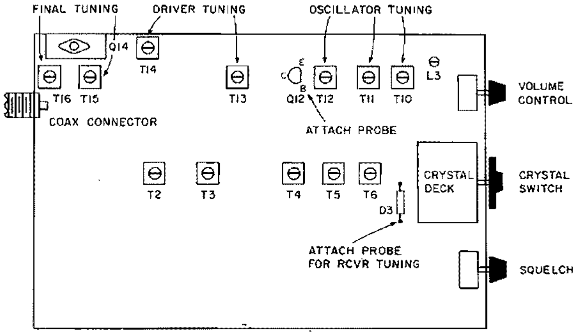

Fig. 2. Realistic Mini 23, bottom view.

Bill Johnston N5KR
1808 Pomona Drive
Las Cruces NM 88001

Kerchunk . . . Kaboom!

—safe distances between dynamite and rf

The sign says, "DANGER—BLASTING, Turn Off All Radio Transmitters." What are the hazards, and how do they affect you as an amateur radio operator? The fact is that dangers do exist, and the average ham might encounter them from time to time, so let's take a brief look at how to recognize and avoid them.

First of all, this article is not intended as a text for the ham who is a commercial user of explosives. He already knows his business in far greater detail than I will go into here. On the other hand, most of us occasionally come into the proximity of explosives through visits to (or near) construction sites, or perhaps on a farm or ranch. For that matter, one might pass quite close to a blasting site as he simply travels along a public road. These are the occasions where potentially dangerous situations might arise, and these are the situations we would like to avoid.

In the way of background, you should know how explosives are categorized under three rather broad classifications:

1. Primary explosives (also called igniters or detonators) — these are quite sensitive to heat, flame, and shock. This category includes the various percussion, fuse, and electrical blasting caps.

2. Secondary explosives — these are less sensitive to outside influences and are normally detonated through the use of blasting caps. Dynamites fall in this category.

3. Tertiary Explosives — these are quite insensitive and include certain industrial chemicals and compounds. Detonation can normally be triggered only through the use of a secondary explosive. (But accidental detonation is still possible. It was a load of tertiary explosives that accidentally blew up in Texas City, near Galveston, in 1947, killing 561 people and completely destroying the town.)

As you might suspect from the above, secondary and tertiary explosives are not by themselves sensitive to rf energy. Certain primary explosives — and, in particular, electrical blasting caps — are quite sensitive, however, and the accidental detonation of a cap will in turn detonate all of the secondary and tertiary explosives in the vicinity.

The electrical cap consists of a small piece of resistance wire imbedded in an explosive charge. A pair of wires lead out from the cap for connection to the firing circuit.

Fig. 1 shows how the wires, when unconnected, can act as a dipole antenna. With sufficient rf energy induced into the leads, the internal resistance element will heat to the firing point.

Shorting the wires together (Fig. 2) or placing the cap in a completed firing circuit does not necessarily improve the situation. In fact, this creates a loop antenna, which in some cases is even more efficient than the dipole. This can be true no matter how close to the cap the wires are shorted. If you don't believe it, bend a 4-inch piece of wire into a loop and solder the ends to the two contacts of a #47 bulb (Fig. 3). Then move the loop up and down your transmission line or in front of your antenna with the transmitter on, and watch the bulb light up.

A number of years ago, I observed an accident at a MARS station which underscores the danger I am discussing. A military photographer had come to take some pictures for the base newspaper and had outfitted himself with a pocketful of flash bulbs. As he strolled under the antenna system, several of the bulbs went off, much to his dismay. It should be realized that the firing currents of blasting caps are not only similar to those used

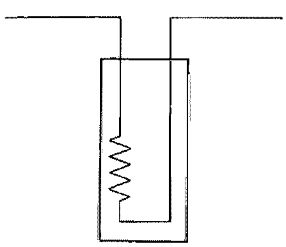

Fig. 1.

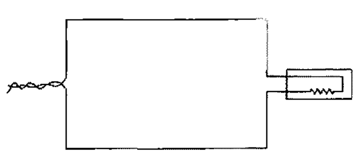

Fig. 2.

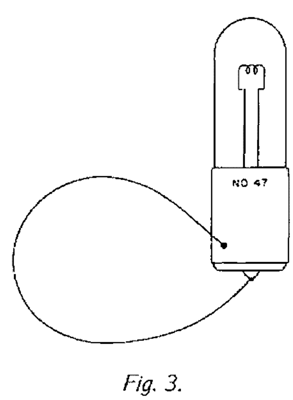

Fig. 3.

for flash bulbs, but, in addition, the caps have wire leads which act as fairly efficient antennas.

The fundamental question then is, at what distance from a blasting site does it become unsafe to use a transmitter?

The minimum safe distance is a function of both the transmitter output power and the frequency of operation. Explosives manufacturers have determined that electrical caps (for unknown reasons) tend to be more sensitive to rf in the vicinity of 21 MHz, but only slightly less sensitive at other frequencies. For all practical purposes, the frequency of operation is unimportant.

Table 1 gives the minimum safe distance between the transmitter and the closest part of a blasting circuit. Remember that, while the charges may be set some distance away, the wires of the blasting circuit could be routed anywhere — very close to a road or parking area, for example. Fortunately, due to the fact that the rf energy decreases away from the transmitting antenna according to the inverse square law, only very high ERPs require extreme separation distances. Such high effective radiated power is most likely to be encountered only at an amateur's fixed station, and blasting operations are not likely to occur anywhere near a residence.

We can see that the primary danger arises from the use of mobile and hand-held transmitters at or near a site where blasting operations are underway. It is here that a transmitter can easily be inadvertently carried within a few feet of a live firing circuit, and it is here that one must be especially cautious. Remember, the explosive charge may be some distance away, but you might be standing right on top of the firing circuit. An accidental detonation would probably not only kill the workers preparing the charges, but would probably also kill the operator of the transmitter, unless by chance he happened to be at the extreme far end of the circuit.

The best rule of thumb to follow is simply to refrain from transmitting at any location where you have the slightest suspicion that blasting operations might be carried out, or where blasting supplies might be stored. Certainly, if you see a warning sign, shut down the transmitter immediately.

The hazards I've mentioned are not a daily concern to most amateurs, but they do arise at one time or another for almost everyone. An informed ham is a safe one, and, with the basics discussed here, he will know when, and when not, to operate his radio transmitter. ■

Effective radiated power (ERP)	Minimum safe distance between transmitting antenna and closest part of electrical firing circuit	
Watts	Feet	Meters
10	100	30
50	225	70
100	325	100
250	500	150
500	675	200
1,000	1,000	300
10,000	3,000	915

Table 1.

Terry Simonds WB4FXD
655 Arcadia Drive
Norcross GA 30071

Be Mr. Clean!

—simple RTTY trash remover

Like most ham projects, my entry into RTTY was neither planned nor anticipated. One day I was given the opportunity to acquire, at a very reasonable price, a Model 15 machine, a converter (TU), and a loop supply. I hooked it all up, after spending a few frantic hours chasing through the 15 trying to trace the circuit along grease-coated wiring whose insulation is black. (Try that sometime and you'll appreciate the effort, especially when you realize that most of the interior of my machine is painted black!)

Don't Put This Thing on the Air

Finally, I got the thing typing on the local loop, but I had second thoughts about going on the air with it after I examined the output from the ancient keyboard. Looking at the output from the keyboard contacts with a triggered dc scope, I saw that the usual mark and space signals were sometimes accompanied by some very short (several milliseconds wide) space "glitch" signals (see Fig. 1). These are due to the keyboard contacts opening when they are not supposed to and can be eliminated by careful transmit contact adjustment. They may appear between consecutive mark bits when you have a character code that consists of two or more consecutive mark bits, such as in the letter M (A in Fig. 1). Or they can appear during a mark bit if one transmit cam has a low spot that allows the contacts to open momentarily (B in Fig. 1). To all mechanical printers and to those electronic systems that use mid-bit sampling, this extra narrow space bit poses little or no problem. However, transmitting such a trashy signal would mark you as a definite klutz, and besides, it requires more bandwidth to transmit that dirty signal than it does to transmit the correct code. On the older machines, the contact adjustment mentioned will not hold for any appreciable time, so I deemed it not feasible to adjust, but better to eliminate.

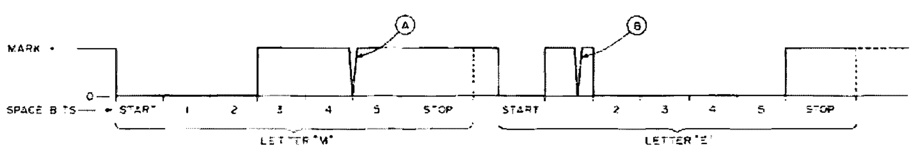

Fig. 1. The Baudot letter "M" has a narrow dropout (A) between bits 4 and 5. The letter "E" has a dropout (B) during the bit period. The dropouts are quite common in worn or misadjusted keyboards.

The Solution

The quick and easy solution that I used to clean up the serial Baudot from the keyboard is shown in Fig. 2. The heart of the circuit is the National LM3302 quad comparator, only one section of which is used. Other comparators can be used with appropriate pin changes. Parts are not critical, nor is layout. I used a PC board because it was convenient to do so, but perfboard construction would do an admirable job.

Circuit Operation

Isolation from the high-voltage loop is afforded by the optical coupler; mark current will cause a +12 V high at pin 4 of the optical coupler. The resistor-capacitor combination connected to pin 7 of the comparator acts as a low-pass filter that turns the narrow dropout space into a rather shallow dip in the overall mark amplitude. Resistors R1 and R2, connected to pin 6 of the comparator, set the comparator reference level, which should be chosen to be below the lowest point of the dip. I have mine set at 6 V. As long as the voltage at pin 7 stays above the comparator reference level, the output from the comparator at pin 1 will remain high. During the normal mark-to-space transition, the voltage at pin 7 drops well below the comparator reference level, and the comparator output

switches low. Therefore, the output from the comparator looks just like what the input from the keyboard should look like, the dropouts having been neatly removed.

It may be necessary to juggle the values of the resistor and capacitor in the low-pass filter to accommodate various widths of dropouts. An alternative would be to change the comparator reference level by altering the values of resistors R1 and R2. The formula for finding a particular reference level is:

Vref = Vcc x R2/(R1+R2).

Resistors R1 and R2 can be any value, but keep the total of R1 + R2 at least 10k to minimize the current.

Output Sense Selection

By interchanging the two input pins to the comparator, you can invert the output waveform. In the configuration shown, the output at pin 1 will be the same as the input. By interchanging pins 6 and 7, the output then becomes the complement of the input. This may be necessary depending upon the circuits that are connected after this circuit. Either way will work equally well. One small note of caution is in order: The LM3302 has the uncommitted collector of a rather "spongy" NPN transistor internally connected to pin 1, so keep the current into pin 1 less than about 4 mA. Much more than this will give you problems, especially at the higher baud rates.

Supply Voltage

Supply voltage for the comparator is not critical, and the whole thing draws less than 10 mA. Use a well regulated supply, especially if you are following this circuit with an FSK circuit. The chip that I used will operate with a Vcc of 5 V to 28 V. I chose 12 V dc because that voltage was already available from a CMOS source elsewhere in my RTTY system. Values shown on the schematic are for Vcc of 12 V dc.

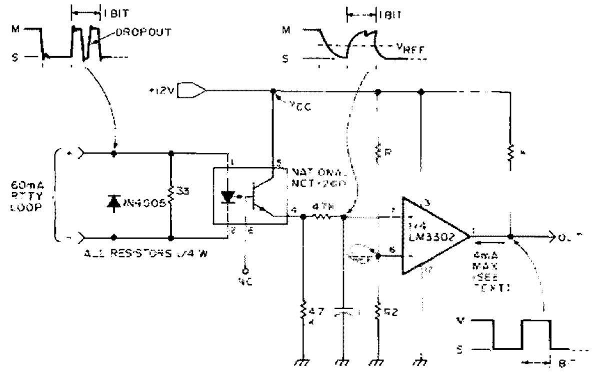

*Fig. 2. Trash remover neatly strips unwanted dropouts from the RTTY signal. *Choose the value that, when in combination with the circuit that follows, will limit current into pin 1 to 4 mA (see text).*

Physical Location

The completed circuit can be located almost anywhere. I installed mine on the loop-supply chassis because I am using the other sections of the quad comparator for other things. You could mount the whole thing inside the machine. There is room for a power supply back behind the mechanism on the Model 15 typing unit. Remember the oil problem, however, and use good components if you mount it in the machine. Petroleum-based lubricants can raise havoc with insulation and other materials that are not classified as "oil-proof." ■

Karl T. Thurber, Jr. W8FX/4
233 Newcastle Lane
Montgomery AL 36117

Build the Triple Threat Keyer

—great Novice project

The new versatile electronic keyers now available, particularly the second-generation "memory" types, offer considerable flexibility of operation over the straight key or telegrapher's bug in serious CW work, whether it be contesting, field day portable operation, or high-speed traffic handling. It is generally agreed that the first-generation keyers such as those offered by Heath, MFJ, Ten-Tec, Palomar Engineers, and others, as well as those home brew units described in the amateur literature over the past several years, are generally excellent units, some featuring built-in paddles and others requiring the use of an external paddle mechanism. The newer units, such as the recently-introduced "CW Sendin' Machine," the Daytronics Contester, and the Autek Research MK-1, are definitely way out in front as truly state-of-the-art devices. They will probably rapidly replace the former as costs come down with mass production and simplified circuitry.

Most of these newer keyers and many of the simpler types require external paddle mechanisms. For portable and field day use, the station's expensive delicate paddle mechanism is something you'd rather not take along, when the unit may be dropped, scratched, or otherwise mishandled. To reduce the risk of damage, I have designed and built a simple three-in-one unit that combines a paddle, sideswiper key, and straight key in one box, along with a simple CW clipper/filter thrown in on the side. The little unit, fulfilling the need for a small, dependable, and lightweight (not to mention rugged and inexpensive) keying mechanism, is little more than two carefully adjusted lever-action switches — one SPDT switch arranged so as to function as either a keyer paddle or sideswiper key* (QCWA types may remember those) at the flick of a switch, and the other wired as an SPST device to act as a simple straight key. Added as a convenience feature is a miniature momentary-contact SPST pushbutton switch across the straight-key contacts for use in tune-up. This design is simple in operating principle and is far superior to pushbuttons as the dash and dot contacts in small portable keyers; the latter are frequently unreliable and difficult to use properly, not to mention being uncomfortable after any extended period of use.

*David H. Atkins W6VX, "QLF? Not with the Great Lakes Sideswiper!", *73 Magazine,* March, 1977.

The Blitz-Box, as this little gadget has been dubbed, is built into a small Radio Shack #270-251 enclosure and can be used in any of the three ways described. For quick trips, you might consider leaving the regular keyer home entirely and bringing along the little box for use as a sideswiper.

Practically any of the Switchcraft "Lev-R" line of switches can be used. These cost from $3-4, depending on the number of sections and contacts. This series of switches has the advantage of being narrow and not too large, requiring only a ½" mounting hole. Actually, any lever-action, spring-return switch could be used, as long as you can get one set of SPDT contacts for the paddle and a set of SPST contacts for the straight key. I used two identical multiple-section junk box switches obtained on the local surplus market for about 50¢ each. Just be sure that the switch selected has a center-off position and is spring loaded and that you have the right type of contact arrangement to give you the SPDT and SPST contacts (the ones I used had to be taken apart and some contacts reversed — a two-minute surgical operation). The additional unused contacts on the lever switches provide convenient mounting points for the various components. Conventional wiring techniques are used throughout. Don't omit the bypass capacitors, as they offer some degree of key click and contact sparking protection.

As can be seen from Fig. 1, the keyer switch is wired so that, by moving the lever in one direction or the other, a dot or dash closure is obtained. Keying feel on both paddle and straight key is easily adjusted to suit individual taste by judicious spacing of the switch leaf contacts to control travel, using a pair of long-noise pliers. In making these adjustments, take care to strike a balance between feel, operating comfort, and reliable contact closure. Also, if the cabinet slides around on the operating table while pounding brass, epoxy a couple of small lead fishing weights inside the cabinet or place a piece of double-backed tape under each mounting foot.

The photo shows that the original plastic knobs have been left on the lever switches, no real paddle, as such, being installed at all. A paddle can be made from a piece of Plexiglas™, Bakelite™, or fiberglass PC board material and painted black. File down the original switch knobs, or remove them. Surprisingly, I have found that the rather large knobs which came with the switches provide a satisfactory feel and do not cause excessive finger fatigue or glass arming. Try building the unit without the paddle extensions, and install them only if necessary, cutting and filing them to slide over the original plastic knobs and epoxying them into place.

As a matter of convenience, particularly for portable and field day use, a simple audio clipper/filter is installed in the same enclosure to cut high-frequency response and to control the volume of received signals to prevent blasting, particularly in weak-signal CW work where agc may be disabled (a real ear-saving device). The clipper simply chops off the audio above a certain threshold (determined by the operator and the diodes installed), reducing the potential for blasting and at the same time clipping strong noise peaks. The filter, which consists simply of a couple of selected capacitors, is not intended to substitute for good receiver i-f selectivity, a must for serious CW work; it is intended to be used in conjunction with a receiver that has at least a fair degree of selectivity of its own, serving mainly to roll off high-frequency audio response to reduce annoying static crashes, adjacent channel splatter, receiver audio hiss, and noise.

As far as the filter shown in Fig. 2 goes, the two silicon diodes are simply connected back to back across the headphone line, and, with a threshold conduction point of about .6 volts or so, prevent the amplitude at the headphones from rising further. Signals below the threshold of conduction are not significantly affected by the action of the diodes. R1 and R2 are selected to enhance the clipping action and do slightly cut headphone volume. However, most receivers have adequate gain to allow for the loss caused by the clipper and the roll-off filter capacitors. R1 is not critical but should be around 47 Ohms, while R2 should be several times the headphone impedance. I used a 100-Ohm pot to allow adjustment of the headphone level when the clipping point is reached. Adjustment of this pot, and the receiver's regular audio gain control, is best determined by trial, and should be a compromise between desired clipping action and headphone volume level. Usually, it will be found that the best clipping condition is that which just starts to take hold on fairly strong signals, leaving the weak ones and the noise background untouched. I have found that it is generally best to run with the audio gain well advanced and to adjust clipping level by riding the rf gain control. Note, too, that the clipper makes it a bit more convenient to run with agc off and to work break-in, since there is no thumping or gain recovery time, distinct advantages when trying to work full break-in.

The desired filter characteristic is enhanced by C4 (medium/wide bandpass) or by paralleling C4 with C5 by use of SW4 in the narrow position. I have found that, with the capacitor values shown in Fig. 2, the medium/wide position works quite nicely on SSB (and on CW when interference isn't too great), while the narrow position, with its roll-off probably less than 1000 cycles or so, is helpful in crowded-band CW work. Although only two capacitors are used in my circuit, a fancier arrangement might use a single-pole, five-position switch to cut in four different values of capacitors (say, .1, .22, 1, and 2.2 uF), with the fifth position being not connected and used to cut out the filter entirely. Larger values of capacitance should not be used, as the filter will tend to simply short out the receiver audio. The capacitor values are best determined by trial.

Assuming the filter is used with a receiver with decent i-f selectivity (or even one of the newer SSB transceivers without the optional CW filter installed), its simplicity becomes its own advantage in that excessive audio selectivity can become extremely monotonous and fatiguing over long periods of operation. It is then not practical to vary the tone much while operating, and you're stuck with the beat-note tone you've tuned up the filter for. Use of the simple untuned filter described has been found to be entirely adequate with a Tempo 2020 (which has a 600-cycle CW filter) and with several receivers primarily designed for SSB work. In either the wide or narrow positions, it cuts out a great deal of background noise, improving signal-to-noise ratio and noticeably reducing operating fatigue. You get all these features at a total construction cost of less than $10 for the whole unit.

Though the designs incorporated in the little 3¼" x 2-3/16" x 4" unit are by no means novel or unique, taken together as a package they afford a great deal of flexibility to portable operation with various transceivers, receivers, transmitters, and keyers. ■

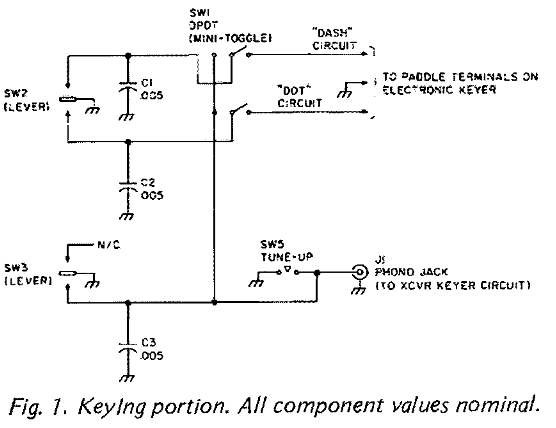

Fig. 1. Keying portion. All component values nominal.

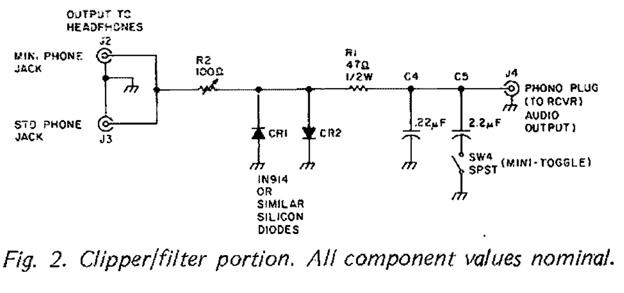

Fig. 2. Clipper/filter portion. All component values nominal.

The Ten Meter AM Antenna Special

—$5 vertical also works on SSB or FM

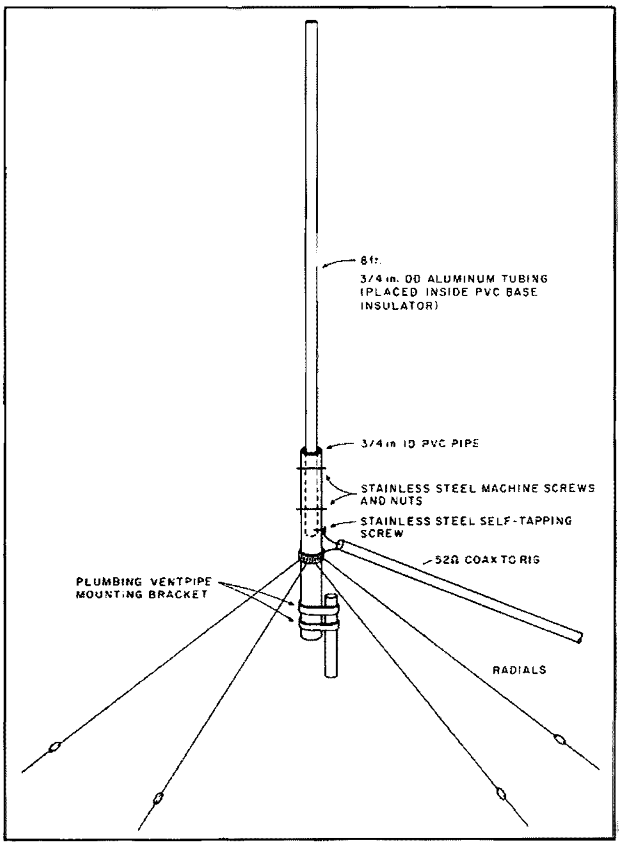

Fig. 1. Design of the $5 vertical.

Alan Kaul W6RCL
9731 Nevada Ave.
Chatsworth CA 91311

Ten meters is a funny band—not funny, ha-ha, but funny, peculiar. Sometimes it "opens" to what sounds like everywhere. Sometimes it isn't "open" at all. And, occasionally when it is open, it is open only in one direction. To take advantage of the band's peculiarities of propagation, you need an antenna which will give you a low angle of radiation and an omnidirectional pattern. If you have a beam sitting on top of a 70-foot tower, that's terrific, because the parasitic elements and the height above ground give you the radiation pattern you want and the antenna rotor provides the 360 degrees of versatility.

But if you don't have any of that, consider this: a rooftop ground plane which is wind resistant and can be built from scratch with new parts for less than $5. The vertical polarization gives you the low angle of radiation needed for long skip, but it won't cause cross-polarization problems when working DX because the signal tends to get unpolarized when it bounces off the F-layer. The vertical polarity will also help with local QSOs when working from your base to someone else's mobile (most, if not all, 10 meter mobile rigs are used with vertical antennas). If you're not able to work 10 meters because of equipment problems, this antenna might help make up your mind if you've been thinking about converting a CB radio to 10 (*73* has published several CB to 10 conversion articles since the first one appeared in May, 1977).

The construction of this antenna is simple. The only tools you'll need are a

hacksaw, screwdriver, soldering iron, and wire cutters. Installation is simple, too. This antenna uses a commercially-available mounting bracket (I'm using a plumbing ventpipe mount which I bought for my TV antenna at a hardware store for less than $2, but a chimney mount or eave mount would work equally well). The antenna will handle several hundred Watts PEP, and, if constructed to the proper dimensions, you can expect a standing wave ratio of less than 1.5 to 1 (mine is below 1.5:1, between 28.5 and 29.0 MHz). While this particular antenna is designed for 10 meters, the same basic pattern can be used on 15 meters using the same size diameter tubing. If you want to design a similar antenna for 20 or 40 meters, I'd recommend doubling or tripling the diameter of the tubing for strength and placing nylon guy ropes near the top of the completed antenna for stability.

Everything you need for 10 meters is shown in the parts list.

Construction is straightforward. The aluminum radiator slips inside the PVC tubing and is held in place with the two stainless steel screws. The self-tapping screw goes through the PVC insulator into the aluminum near its bottom end, and the coax center conductor attaches to the self-tapping screw. The radials are soldered together at one end and affixed to the PVC base tubing with the hose clamp. The coax ground braid is soldered to one of the radials. If you want to get the antenna aluminum tubing more than a foot or two above the roof, the radials should be tied down firmly as guys. If you want to put the antenna even higher—8 to 10 feet above the roof—I'd recommend you invest in an inexpensive television antenna mast of the same inside diameter as the outside diameter of the PVC. Slide the PVC inside the mast and fasten it using two more stainless steel screws.

The angle at which the radials meet the base insulator will have an effect on swr. If the radials drop vertically from the radiator, the antenna essentially would be a vertical dipole and a good match would be obtained with 72-Ohm coax. An angle of 40 to 50 degrees should be a good match for 52-Ohm coax. As the angle approaches 90 degrees, the impedance of the antenna decreases and the mismatch is reflected in an increasing swr.

That's all there is to it. The rest is in Fig. 1. Oh, yes, one more thing—the last time I wrote an article for *73*, I received 35 inquiries by mail requesting more information. I'll be happy to answer all letters, but only if you send a self-addressed stamped envelope.

See you on 10.■

Parts List

one piece of aluminum tubing (8' × ¾" outside diameter)
one piece of PVC pipe (any length × ¾" inside diameter—double-wall is recommended for strength)
two stainless steel screws with nuts and washers (8 x 32/1½" works fine)
one self-tapping sheet metal screw
one automotive-type hose clamp (1½" inside diameter)
four 8'8" lengths of copper wire for radials (copperweld or similar if vertical element is sufficiently above the roof requiring the radials to double as guy wires)
four strain insulators
one piece 52-Ohm coax, any length to transmitter
one installation bracket, your choice

W2NSD/1 NEVER SAY DIE

editorial by Wayne Green

from page 8

up a lab with the latest in microcomputers up and running so submitted programs could be tested for accuracy and interest. Next, I encouraged programmers to get cracking. The first of these programs to be published were introduced at the National Computer Conference in early June and the response was immediate—just what everyone needs.

Our facilities for duplication are limited. We have about 50 top-notch cassette recorders set up in parallel for copying. We've been using these for our code and Novice theory cassettes. With these, we can crank out perhaps 500 per day, if everything runs smoothly. That's pitiful when we look at the demand for program cassettes.

We're gearing up to turn out four new programs a day... that's 20 per week. With about 1,000 computer stores already up and running and another thousand being planned for the near future, we would need to turn out a bunch of cassettes just to keep new programs going to the stores. Say we shipped them ten of each new program... that means we would be shipping 40,000 cassettes per day, not including any repeat orders. Obviously this means high speed duplicators, a rather large new plant, another computer to keep track of the business, packing and shipping machinery, a bigger computer lab, more editors to check out programs and prepare master tapes, etc.

There are more millions to be made in microcomputing in making accessories for the popular systems. I'll be surprised if there aren't more millionaires in the next few years than ever before in the history of the country. Interested parties can contact me for my consulting fees. Ahem.

In view of my grandiose software plans, you can perhaps understand why my reaction to the lack of a letter to ask for funds for an African mission was mixed. I'm reminded of the old joke about the mixed emotions of the chap watching his mother-in-law go over a cliff in his new Cadillac.

After being on the poor side for most of my life, the prospect of money is fun to contemplate and, like the loss of frequencies, I don't actually believe it. If it really happens, I'll try to believe it. In the meantime, whether I believe it or not, we have to get going on the new plant, getting tapes out, etc. This means hiring a lot more people—anyone interested with some of the backgrounds we'll be needing in management, cassettes, programming, financial planning, production, packaging and shipping, automated machinery, etc.?

EUROPE '78

Sherry and I arrived in London in late May to find my favorite hotel full. We had to settle for rabbit-warren-type accommodations. Most surprising of all was the prices—about double those at home for most things. Would you believe $4.50 for a simple roll and coffee "continental" breakfast? After two days of this, plus a meeting with a microcomputer manufacturer and a visit to a microcomputer store, we went to Paris. The prices were not lower.

The main event in Paris was Micro-Expo, a microcomputer show. It was mobbed and we sold a bunch of subscriptions to *Kilobaud*. One of the high points of this show for me was my talk to the assembled multitudes... the room was packed, with the audience spilling over into the aisles, on the stage, and backed up out in the halls. There's enough showman in me to enjoy an enthusiastic crowd liked that, and to know that word of *Kilobaud* had spread even to Paris and the continent.

I spoke on the microcomputer $300 million fraud, the selling of microcomputers without the programs to back them up. I emphasized the need for the developing of software for microcomputers along with the hardware, if we are not to suffer a devastating disillusionment by the general public. I offered some proposed solutions to the dilemma. The response was very good.

From Paris, after checking out the Louvre carefully and trying some meals in Moroccan, Greek, and Vietnamese restaurants, we went on to Zurich, switching from French food to fondues. We rented a car and drove through Berne to Geneva and talked almost a full day with the amateurs on the permanent staff there, and with the chaps at 4U1ITU. The ham station there has seen better days and possibly is reflecting the low morale of the hams who see the coming ITU meeting as no reason for joy.

In addition to a vintage Yaesu FT-101 station, there was a wonderful old Collins rig. They also had one of the ARRL low-powered CW stations which have been developed for use in third world countries. This is on display for any representatives from these countries who might visit the ITU.

The truly unfortunate aspect of this rig is that the whole concept involved is abhorrent to most of the emerging nations. The ARRL meant well when it developed and backed this idea, trying to make it possible for a real low-cost personal ham rig to be made available for hams with next to zero budgets. The idea is fine, as long as you have never visited these countries and are ignorant of their situations.

The fact is that there are few of the emerging nations where the rulers are interested in citizens having personal communications. Most of these countries are shaky and the rulers are quite interested in staying in power. They know that if individuals are able to develop communications, the same thing could happen to them that the British set up when they permitted all those ZC6 hams to operate... and they quickly became the communications network which helped Israel to get started. It is doubtful if Israel would have made it without the hams.

Remember that King Hus-

W2NSD/1's address at the Paris micro show was made to a packed house.

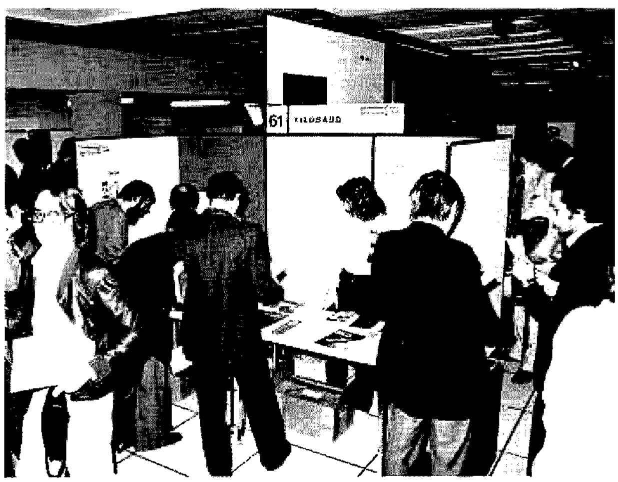

At the Paris Exposition of Microcomputing, Monika and Reinhard Nedela, the European Kilobaud *representatives, did a brisk business at the* KB *booth.*

sein set up ham communications even though his country was involved in a civil war. This never would have been permitted on an individual basis . . . too much chance for enemies to use the radios for fighting against the government. But the setting up of club stations for the youths gave enough control of the situation so there was no worry. The same holds true for most small nations—club stations are okay, personal communications, no way. Put it this way . . . how many personal stations have you contacted in Russia? The chances are that, with very few exceptions, you've worked only club stations.

After talking with the hams at the ITU and making an hour tape of some of the more important aspects of the interviews to be played to ARMA at Atlanta, we drove off to Luzern, one of the most beautiful of Swiss cities. The next day we drove on to Liechtenstein for lunch, a quick drive through Austria and Germany to make it four countries in one day, then back to Zurich.

The next day we flew back to the U.S. and, after one day at home, grabbed our suitcases and were off to Atlanta for the ARMA meeting and the Atlanta Hamfest-Computerfest.

I've covered the ARMA meeting pretty well. The hamfest was excellent, as usual. I had a good audience for my talks on computer software and the state of microcomputers today, and for my talk on WARC and the African situation. I would appreciate getting a tape of the ARRL forum on Sunday, for I understand that, while most of the meeting was devoted to a critique of *QST* covers, just at the end Eaton got up and said that the manufacturers were going to send a trade mission to Africa to try and develop a market for ham gear there. I think the innuendo was that this would then stop the Africans from building equipment just as the industry has stopped building here. This is an old anti-manufacturer line from the ARRL and is a crock. Hams are building more than ever before in history; you have but to look at the dozens of pages of parts ads in *73* to know what the real story is, and then compare that with the parts advertising from any period in the past.

It sure looks to me as if *QST* is afraid to let the manufacturers get together and form an organization and will do what they can to torpedo the effort. The manufacturers made *QST* eat crow on their demand that ham gear only be sold to hams, and more crow is on the menu after the recent *QST* proclamation that manufacturers would have to submit equipment for *QST* evaluation for purity of signals before ads can be run in *QST*. If *QST* would *ask*, the industry would probably bend over backwards, but no one likes to be commanded.

From Atlanta, we headed for Anaheim and the National Computer Conference (NCC). Some 40,000 people gathered to see the latest in computers and systems, with a separate exhibit area for microcomputers. Our booth was there, in the Disneyland Hotel. We were there four days and never had one hour to spare to go next door and see Disneyland!

The main exhibit for us was our new software packages. We're getting geared up to turn out about four new computer programs a day. These are written by *Kilobaud* readers and we are just publishing them and putting them on cassettes for users. The response to our software was fantastic; every manufacturer was enthusiastic and my talk at NCC on the subject was well received.

While in town, I had dinner with Pete Hoover K6ZH and discussed the WARC situation with him. Though the ARRL has been trying to cover it up, many influential hams have been pressuring it to *do* something about the African bloc situation. The heads of the ARRL Foundation tried to organize a fund drive to help with this, but Baldwin cut it off and the officers of the Foundation resigned in protest, including Pete. Pete is the son of Herbert Hoover, Jr., past president of the ARRL, by the way.

One of the large publishing firms also took us to dinner, wanting to buy out the magazines. That's ego-gratifying to hear, even though I can't think of any reason to sell. With our computer software plans about to dwarf the magazines in sales, this is not a good time to think about selling, even if I was of that mind. I enjoy publishing too much to change.

From Anaheim, we made a quick trip to San Francisco to visit Lomac and talk with John Peers, a most enthusiastic and intelligent chap. We sat down and found his Adam computer a delight to program, so much easier than anything else we've tried—a dream. From there we checked out some high speed cassette duplicating equipment—should cost about $200,000 for what we need—and then off to dinner with Bill Godbout, George Morrow, and Bob Mullen. What a fantastic trio!

When Godbout throws a dinner for friends, he does it first class . . . complete with a flight in his plane for a half hour or so, then a long taxi ride to Mark

The BirmingHamfest was indoors this year in mid-May and brought a nice turnout. About half of the displays were in the flea market area, seen here.

West for dinner. All three of them are so full of ideas that even a few minutes with them is exhilirating. One of the delights of both the ham and computer business is that talking business is fun. We talked over new product ideas, advertising approaches, possible ways for the market to go, the impact of various new systems, and before we knew it, the restaurant was closing and we had to come back to the real world.

The next morning, Sherry and I headed for Los Angeles, then on to Atlanta for a short appointment there, staying for the first time at the Omni. You can

Though a good part of the trade exhibit area was occupied with ham stores, there were a few manufacturers such as Ten-Tec, Kenwood, etc., seen here.

bet I'll be getting to the Atlanta Omni as often as I can. It's no wonder that Underground Atlanta has been hurting. They have the same type of entertainment in the Omni, but without the junk. We're both Frogurt fans and, sure enough, the Omni had a Frogurt stand . . . and several restaurants . . . and a fudge store (why does one pound of fudge help me put on five pounds of weight?) . . . love their orange fudge . . . a McDonald's (I like their breakfasts) . . . etc.

The next morning we were off again to Puerto Rico. We only had a couple hours between planes, so we caught a taxi to town and went to El Morro, the fort commanding the entrance to the harbor. Then we flew down to Martinique for three days of rest and recuperation. Again we were on an Eastern special fare tour which costs less than the round trip to California. The islands are packed all summer as a result of this new Eastern fare . . . what a great idea that turned out to be . . . and the Eastern planes are packed, too.

Martinique is beautiful, but there must be a rule against the natives smiling. Everywhere we went, the natives were dour. In the restaurants, they did their job but cast gloom everywhere they went. The prices in Martinique, like St. Martin and Paris, were horrendous. Four dollars for a breakfast with two cups of coffee and a couple rolls, a pat of butter, and a dab of jam. It sure makes McDonald's look good. At least in Paris, you *could* go to McDonald's . . . two of them on the Champs-Elysees.

As usual, I had ordered a Budget rental car to be waiting for me. I had a bit of a hassle getting the car, and then when I started to drive off, I found it was almost out of gas! Ugh. We had about two francs of French money, so I had to pay for gas with American money, it being Sunday night and there being no banks open. The gas station ripped me off for half the regular exchange rate, bless 'em.

The hotel was about 20 miles from the airport and the route signs were minimal, so I drove through the blackest night I've seen in a long time, nursing a very crummy Fiat car along. The light switch panel was hanging out of the dashboard by its wires, and the rest of the car was not in much better shape. Just as we got to one of the darkest places, a tire let loose. I was still dressed in nice clothes, the temperature was around 85°, and I had not the slightest idea where to find the spare tire, the jack, or the tools.

Luckily, I had a flashlight with me. Am I glad I carry that! It's part of my kit . . . camera, spare lens, film, cassette recorder, battery, and a couple games to play on planes, such as Boggle and Cribbage. Also the flashlight. I found the tool kit, but the jack was a bit more difficult to locate . . . finally found it up under the front hood, along with the spare tire. The spare looked as if it would give out shortly, too.

Much to my amazement, a native stopped his car and offered to help. I was organized by this time, but he did help out and gave confidence. We got the tire changed in short order and I continued on to the hotel.

The next morning, I discovered a Budget office right across from the hotel, so I went on over and asked them to fix the tire. No, I'd have to take the car back to the airport where I rented it. I looked at the spare, which never would have made it that far, and got up a head of steam. I got out my camera and took a picture of the spare tire, the car, and then tried to take a picture of the gal who was giving me the hard time. This changed things. She wanted to know what the pictures were for and I announced that I was a journalist and knew when I had the makings of a story. She quickly pointed to another nearby car and said I could exchange my jalopy for that one, even though it should rent for more. It was a slightly better Fiat, so I said okay. I hate having to rattle my magazine at people, but dammit, I sure don't like being victimized.

Something similar happened the next day. Eastern had included a prepaid tour of Martinique in our fare. I checked with the hotel and asked about it. They pointed across the street to a tour office. I went there and asked about the tour, showing them my coupons. They set it up for the next morning.

Sherry and I arrived for the tour on time, got into the taxi provided, and we set off. The driver went about a quarter mile and stopped, asking what we wanted to see. I said we were supposed to get a tour of Martinique and he said, oh no, that those tours left only from the capital, Fort de France, and that we should have taken the ferry across the bay and met him there. Oh, he could drive us up to Fort de France, but that would be $14 extra. Beginning to suspect foul play, I asked to be returned to the tour office.

At the office, I went back over the scenario and asked why I had suddenly been presented with a bill for $14 for a tour which was supposedly prepaid. They suddenly had trouble speaking English . . . perhaps something could be arranged for tomorrow from Fort de France, they suggested? I said no, we're going to Dallas tomorrow. I said that this had all the appearance of taking advantage of tourists and, as a journalist, I found this most fascinating. They then decided that the taxi would take us on the tour of the island without our paying the $14. I'd lost a lot of interest in the deal, but eventually they wheedled me into going. I'm glad I did, for it was a fantastic drive, even though the driver sulked the whole time.

If you have a chance to get to Martinique, I would recommend that you be sure to take this drive up through the rain forest and back down the coast, stopping off at St. Pierre, which used to be the capital of the island. We did see one interesting thing during the trip in addition to the fantastic beauty, and that was an old jalopy stopped at a bend in the road where a pipe came out of the side of a hill. Two people were there filling some plastic bottles with water. We could see the blue and orange labels on the bottles and I said I'd bet that they were going to sell the water.

That evening, back at the hotel, Sherry ordered her usual Perrier water . . . all out, but we have some good local mineral water. They brought out one of the same bottles we'd seen being filled. It tasted exactly like water. Quite a business at $1 a bottle.

There were three restaurants right next to our hotel, the Del La Marina, one Chinese and two French. On the mineral water episode evening, we picked the Brasserie Restaurant and presented ourselves for dinner. The woman seating people ignored us for a while and then pointed across the room at an empty table and went on about other business. After fifteen minutes, a waitress stopped and asked what we wanted to drink. This resulted in the Martinique water bottle. A half hour later, we still had had no further attention, not even any bread. We gave up and left, going next door to another restaurant where we were served promptly, if unsmilingly. What a bunch of unhappy people!

The hotel room was spartan, but comfortable, and had a kitchenette, complete with refrigerator. And right next door was a small grocery store, so we enjoyed bananas, coconuts, ripe pineapples, cheese, and lots of Perrier water.

Since we only had a three-day visit sandwiched in between shows, I didn't take a rig along. Licenses are not difficult to get there and I think the next trip will see a rig under one arm.

DALLAS

Eastern picked us up on schedule, stopped by St. Martin for a few more passengers, and then took us to San Juan for a plane change. We had to go through a customs inspection here and that was frustrating. We had two hours between planes and we spent one solid hour on line at customs, watching a woman go through every square inch of every piece of luggage of every person on the line. It seemed to take forever.

Since we had bought absolutely nothing, not even a postcard, she was a little speedier in going through our six pieces of luggage. Martinique prices are not much different from Paris prices, an effective economy measure for us. I needed shoes badly, but at $75 a pair for $25 shoes? Phooey.

The Eastern route from San Juan to Dallas went to Miami, Atlanta, and then Dallas. Naturally, the plane broke in Miami and our flight would be delayed an hour. We had a one-hour wait at Atlanta scheduled, so this meant we would lose that connection. A little look at the flight schedule showed a plane leaving later going direct to Dallas from Miami, arriving a few minutes after our originally scheduled flight. We changed . . . and hoped for the best on the luggage.

The best was not to be.

An hour after we arrived in Dallas, a plane came in bringing two of my three bags. The third bag was located a couple days later, having detoured to Chicago for some obscure reason. Naturally this was the bag with my clothes, so I had to rush out and buy a new suit to use at the show. I was scheduled for two performances, one on computer software and the other on WARC.

We'd shipped a couple of suitcases and four boxes of stuff from Los Angeles to Dallas, hoping to pass up taking all that to Martinique. The suitcases were waiting for us (with subscription blanks), but no boxes. Eventually, we did find three of the four boxes . . . they'd been shipped to Atlanta . . . and got them back in time for the show. Between the boxes and the missing suitcase, we spent many hours and bucks on phone calls.

RENTAL CAR RIPOFF?

Budget pulled a stunt on me at Atlanta that bugged me. I've been using 'em for years and

Continued on page 162

Buddy, Ya Got A Match?

—build one L of a matcher

William Vissers K4KI
1245 S. Orlando Ave.
Cocoa Beach FL 32931

Although the L-network is theoretically capable of matching any two impedances, many amateurs have encountered problems in its use. The difficulties are often twofold. The first is a failure to fully appreciate exactly how the network wants to work for various load conditions. And, secondly, the size of the variable capacitor required often reaches values that are generally unobtainable. However, both of these problems are very easily overcome. The first can be surmounted by a fundamental review of matching principles. And the second obstacle can be readily overcome by a simple design change that allows a small variable capacitor to be used where formerly a large one would have been required.

An experimental breadboard unit has been successfully used here at K4KI. It was economical and simple to build and also is easy to use. The basic L-unit, a simple switching circuit, and a small fixed inductance allow full matching capability to be readily realized on all bands from 10 through 80 meters.

Mathematics

Unfortunately, I'm going to have to keep the mathematics really simple because of something that happened to me many years ago at the little two-room school where I started my education. One day, the teacher asked me, "Willie, if I take three apples from eight apples, how many apples do I have?" Well, naturally, I told her that, if she took three apples, she'd have three apples. The expression on her face somehow indicated that this wasn't the answer she expected. So she started to explain that when she said she took three apples, she really didn't have three apples, but, just as we were getting into it, the recess bell rang. Well, when we got back to our math class the next day, our teacher must have forgotten all about it, as she didn't ask me again, and that's why I never did get into higher math. But the lack of it has actually been a blessing, because it really helps you understand things by keeping them simple. And you'll be surprised how simple the understanding of the L matching unit really is.

The Basic L-Unit

The easiest way to understand the basic L-unit will be by the calculation of an actual numerical example, combined with a set of tables that show network values and configurations for a range of loads representative of various antenna impedances. I'll start by calculating network values required to match a pure resistive load to the transmitter. And then later, I'll make the load a combination of resistance and reactance. Finally, I'll show how, with the addition of a small fixed inductance, you can reduce the size of the variable capacitor required.

As almost all transmitters nowadays have a fifty-Ohm output, I'll use that as a basic reference. For the numerical example, let's say the load is thirty Ohms of resistance. You can say that you are matching the high fifty-Ohm output resistance of the transmitter to a low resistance, which means you are matching from high to low. This concept is important, as the basic equations are given in terms of high and low. The transmitter, the L-network, and the 30-Ohm load are shown in Fig. 1. The network is made up of a series and a shunt arm. For matching a resistive output to a resistive load, one of the arms has to be inductive, while the other arm has to be capacitive. The equations used for calculating the reactance of the series and shunt arms when the load is a pure resistance are as follows:

$$X \text{ in Ohms of series arm} = \sqrt{(\text{low})(\text{high} - \text{low})}$$

$$X \text{ in Ohms of shunt arm} = (\text{high})\sqrt{(\text{low})/(\text{high} - \text{low})}$$

Substituting in the numerical values, we obtain:

$$X \text{ series} = \sqrt{(30)(50 - 30)} = \sqrt{600} = 24.5 \text{ Ohms}$$

$$X \text{ shunt} = (50)\sqrt{(30)/(50 - 30)} = 50\sqrt{1.5} = 61.2 \text{ Ohms.}$$

As you will, for purposes of illustration, want to add or

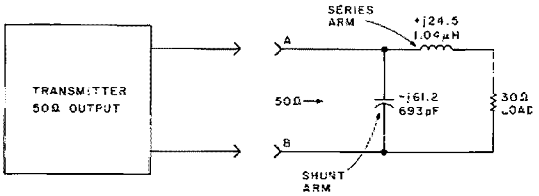

Fig. 1.

subtract reactances and also show whether a reactance is inductive or capacitive, you can use the standard notation that inductive reactance is +j and capacitive reactance is -j.

So Fig. 1 shows the inductive reactance as +j 24.5 Ohms and the capacitive reactance as -j 61.2 Ohms. With these values, you would find that the impedance looking in at terminals A and B is exactly 50 Ohms resistance.

There is, however, one other thing to do, and that is to translate the values of reactance into actual values of inductance and capacitance. In the two following equations, the term frequency will occur, so I chose the value of 3.75 MHz, the center of the 80 meter band, as the reference for all further work. Naturally, the values of inductance and capacitance can be calculated for any frequency desired.

$$C_{pF} = \frac{1,000,000}{(2\pi)(F_{MHz})(X_C)}$$

$$= \frac{1,000,000}{(2)(3.1416)(3.75)(61.2)}$$

$$= 693 \text{ picofarads}$$

$$L_{uH} = \frac{X_1}{(2\pi)(F_{MHz})}$$

$$= \frac{24.5}{(2)(3.1416)(3.75)}$$

$$= 1.04 \text{ microhenries}$$

At this point, it would be well to ask why the configuration of Fig. 1 was used in the L-network. It can best be understood by looking at Table 1(b) and again calculating the values of X_1 and X_C and then finding the actual values of L and C. The values of shunt and series reactance have the same numerical values as previously. However, if you calculate the values of L and C in Table 1(b), you find them to be L_{uH} = 2.6 microhenries, and C_{pF} = 1732 picofarads. The values are shown in Table 1(b), also. It is seen that the configuration of Table 1(a) is most desirable, as you require only 693 picofarads, as compared to 1732 picofarads, as in Table 1(b). It should be noted that either configuration will give a 50-Ohm match to the transmitter. Switch SW2 will allow either configuration to be selected as desired in the final circuit.

Complex Impedance Loads

Now that the values of the network for a resistive load of 30 Ohms have been calculated, let's assume that the load has changed to the one shown in Fig. 2. Here, the resistance is still 30 Ohms, but there is also a capacitive reactance of -j 50 Ohms. If you look at Fig. 2, you see that the shunt capacity is still 693 picofarads. And you also see that the +j 24.5 Ohms is still used. These values just mentioned are basic in matching to the 30 Ohms of resistance. But, if somehow you could add an additional reactance of +j 50 Ohms in the series arm, it could be used to cancel out the -j 50 Ohms in the load. And you see that the total inductive reactance needed in the series arm is nothing more than (+j 24.5) + (+j 50), which equals +j 74.5 Ohms. This total inductance calculates out to be 3.16 microhenries. As these two inductances can be combined into one, the final network will be that shown in Table 1(d). So you see that the L-network can be used to match a complex impedance.

Now knowing the basics of calculating the values of the L-unit, it would be possible to further calculate the values of the series and shunt arms for quite a variety of loads. But let's not do this for several reasons. First, very few amateurs actually have rf bridges that let them know their exact values of resistance and reactance of their antenna. Secondly, as you already understand the basics of the calculations involved, and, as a picture is worth a thousand math symbols, it was believed that a set of tables showing values of reactances, capacity, and inductance for a range of loads generally encountered would be preferable to a lot of additional math. And, lastly, by seeing the actual values of inductance and capacity required, it will be easy to understand why the switches in the final circuit are needed to obtain the most desired configuration. The calculations used in making up the charts were based upon the basic equations for matching into a resistive load plus simple series-parallel equations when the loads shown are complex impedances.

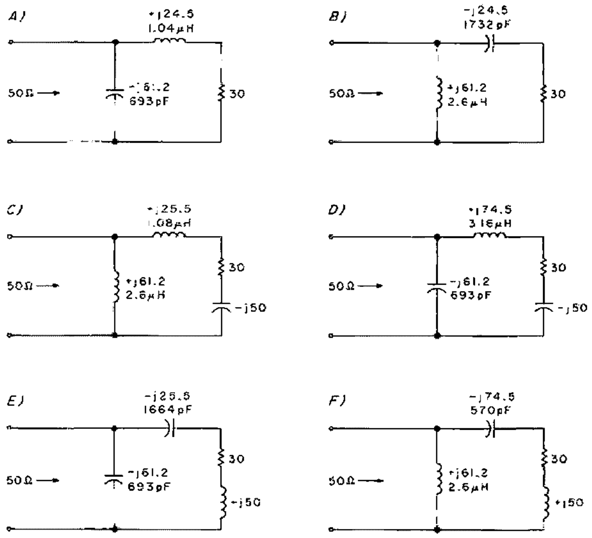

Table 1. Fifty Ohms to low-impedance loads.

Table 2 shows that you can also match the transmitter into a higher impedance than 50 Ohms. But, in that case, the series arm of the network is on the transmitting side rather than the load side of the circuit. This transformation is readily made by switch SW1 of the final circuit.

Canceling Capacitive Reactance

If you inspect the tables, you find that the value of capacitance needed using the most desirable configurations to match the range of loads is 693 picofarads. Well, this is sure a good-sized capacitor, and that kind is about as scarce as hen's teeth and twice as expensive. This value of capacitance is equivalent to a reactance of -j 61.2 Ohms, and you need this value of reactance to obtain a proper match. Is there any

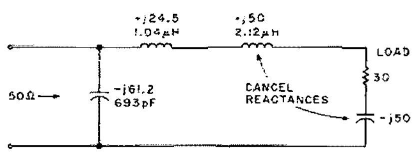

Fig. 2. The total inductance in the series arm is 1.04 uH + 2.12 uH = 3.16 uH. The total reactance in the series arm is +j 74.5 Ohms.

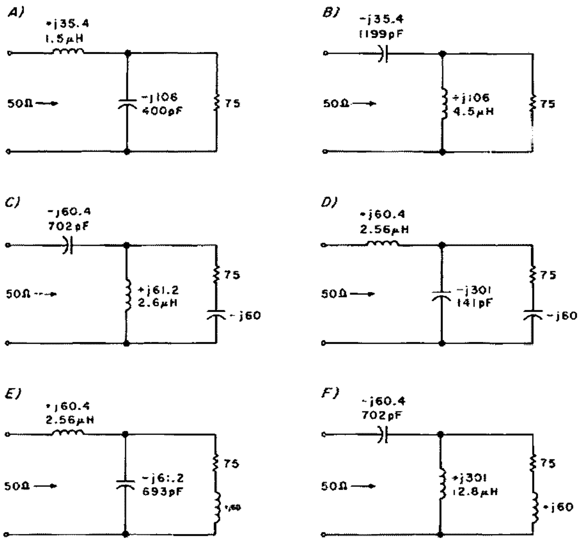

Table 2. Fifty Ohms to high-impedance loads.

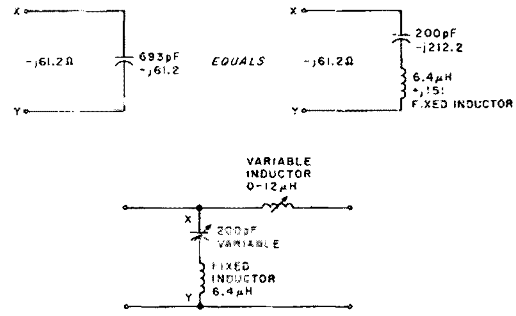

Fig. 3. L-matching unit.

other way to obtain a reactance of -j 61.2 Ohms without using such a large capacitor? Sure, and a bit of math no more difficult than subtraction will show you how to do it. Well, actually a bit of subtraction plus a small fixed inductance. And it's so easy that, at times, I feel a bit guilty at fooling the L-network that way, but it works and saves buying an expensive large capacitor where a small one will do the job.

Assume you only have a 200-picofarad variable available to use in the matching unit. Using the equation for reactance, you find that:

$$X_{200\,pF} = \frac{1{,}000{,}000}{(2)(3.1416)(3.75)(200)}$$

$$= -j\ 212.2 \text{ Ohms.}$$

Now, if you put an inductive reactance of +j 151 Ohms in series with the 200-picofarad capacitor with a reactance of -j 212.2, you will find the net result is -j 61.2 Ohms. This is the exact reactance needed for the series arm when a 693 pF capacitor is required. The value of fixed inductance is calculated as:

$$L_{fixed\ uH} = \frac{151}{(2)(3.1416)(3.75)}$$

$$= 6.4 \text{ microhenries.}$$

So a little bit of "magical math" shows that, by using a fixed inductance in series with the 200-picofarad capacitor, you make the circuit actually think that you have a 693-picofarad capacitor in the circuit. There is no longer the need to wistfully wish for a large expensive variable capacitor when a small readily available one will do the trick. The basic matching circuit described is shown in Fig. 3.

The Final Circuit

The completed circuit is shown in Fig. 4. As the amount of capacity required becomes less with an increase in frequency, it was found that the fixed inductance was not required on the 10, 15, and 20 meter bands and should be shorted out. As the amount of fixed inductance required is less on 40 meters than on 80 meters, a tap is used on the coil to reduce the inductance. All of these necessary switching functions are accomplished with switch SW3, a DPST with a capability of being left in the center position when the unit is used on 80m.

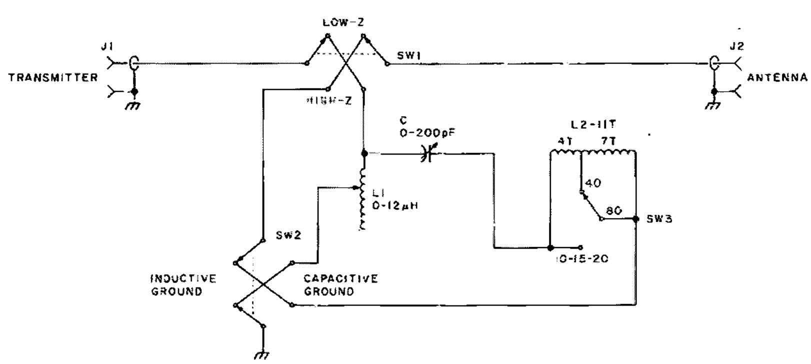

Fig. 4. Low-capacity L-type antenna matching network. L1 — 0-12 uH rotary inductor; L2 — 11 turns #12 enamel, space-wound 2-5/8-inch diameter, 1-3/4-inch long, tapped at the 4th turn, fixed inductor; C — 0-200 pF variable capacitor; SW1, SW2 — DPDT toggle switch; SW3 — DPST toggle switch with center-open position; J1, J2 — coaxial connector, chassis type.

Switch SW1 reverses the input and output as required to match into a high or low impedance. Switch SW2 allows the inductive reactance and capacative reactance to be switched from series to shunt to effect a proper match, as needed.

Although the network was designed to provide maximum flexibility, my personal experience has been that, in many cases, the feedline can be adjusted for a 1:1 swr over an entire band without any switching at all being necessary. However, this depends upon the characteristics of the antenna being used. My design uses a 200-picofarad variable donated by K4YS, our president of the Indian River Amateur Radio Club, who was very much interested in the project. But, if a larger-sized capacitor is available, it can be used. In that case, you may want to make the fixed coil somewhat smaller. The 0-12 uH variable rotary inductor was picked up at a ham convention. Apparently, it came out of a piece of surplus equipment (probably a BC375 or 191 tuning unit).

There is no reason why a tapped coil with a rotary switch could not be used instead of the variable rotary inductor I used. The rotary inductor does have an advantage in that the exact reactance can be cranked in as desired. However, a properly designed tapped coil instead will allow you to get your swr down to a low level. In building the unit, the general precaution of keeping leads short

is to be observed. But this is not difficult to do. By placing switch SW1 between the input and output coax connectors, the leads can be kept quite short. Proper placement of the other two switches will keep the remaining leads to a reasonable length. There were no current loops observed caused by stray capacity. A bit of experimenting with the size of the fixed coil may be desirable to insure the best tuning for the variable capacitor you use.

There are undoubtedly a number of purists who will throw up their hands in horror for whatever variety of reasons they may conjure up. It will be found that because the 200-picofarad capacitor actually thinks it's a 693-picofarad one, that the tuning may be a bit sharper, but that is no problem at all. It can be argued that the rf voltage across the 200-picofarad capacitor will be a bit higher than that of the capacitor in a conventional network. This is true, but I have been unable to induce any kind of arcing across the capacitor plates, no matter how much I twiddle the knobs. It can also be said that, if the fixed inductance is large enough, it will be possible to develop a series resonant circuit with the fixed inductance and capacitor. This is true, but you just don't make the coil that large.

Although I was able to obtain the parts for the unit rather inexpensively, even if new components are used, the price will still be quite low.

A lot of the fun was in developing the method used and generating the tables in which an easy quick understanding of how the basic L-unit works can be obtained. The knowledge of how the L-unit works is a valuable addition to any amateur's technical store of information. And so a bit of "magical math" proved to be a lot of fun and practical, too. ■

W2NSD/1 NEVER SAY DIE

editorial by Wayne Green

from page 150

this was a new one. I used a car for a couple days during the Atlanta hamfest, keeping it parked in the hotel garage almost the entire time. I turned it in and went to the Budget booth to settle. They said that there was a dent on the car and that this would cost an extra $250. This got my attention.

Normally, I report to an airport a few minutes before my plane is scheduled to load, but for some reason on this day, we arrived a couple of hours early. The hamfest had closed, we'd had to check out of the hotel by noon, and our flight didn't leave for Los Angeles until 6 pm. Having the time, I grabbed my camera case and went back to the place I'd dropped off my car, making sure that the booth called 'em and told them to hold it.

I got to the parking area and the gal there said the car had already been sent to the garage. I said to dammit get it back, that I wanted to see that dent which was costing me $250. I hadn't noticed any dents and I knew darned well the car hadn't been touched while I was driving it.

It took a half hour to get it back, but it finally arrived. Atlanta was about 90° and I was boiling. I looked over the car and could find nothing. The gal then showed me a place under the driver's door where the body had been pushed in maybe a half inch. It looked like the body design, but sure enough, the other side had no indent. I looked for scratch marks and there were none. I can't even imagine how the dent was made . . . or if it was an old one and painted over. There was no scratch at all! I took pictures of the dent, of the girl, the booth, etc., and the next thing I knew I was told that the dent was not significant, that there would be no charge. Please don't worry about it.

To me, the whole act sounded like a ripoff. Most people would be catching a plane and would just have to trust Budget that the car was okay when they got it and dented now. I was lucky to have the time and the gall to challenge them.

You can bet that the next time I stopped at Atlanta, I looked over my car very carefully and made the girl at the parking lot make a note of the two dents. When I turned the car back, I asked them to see if the records for the car had any dents mentioned . . . none! It looked to me as if I was being set up again for the same scam. I made darned sure that they knew the dents had been there when I picked up the car, so I didn't have trouble.

Has anyone else run into this problem?

ONE LAST WORD

When the ARRL HQ chap said they *can't* take away the ham frequencies, I told him about my visit a couple days before to St. Pierre. In the museum are several copies of the newspaper warning residents that Mt. Pelee could blow up at any time and that they would do best to get away from that end of Martinique. Few people paid any attention to the newspaper warnings and in May, 1902, the volcano blew up and 40,000 people were killed in one day. There was one single survivor out of the entire population of the town.

HAM OF THE YEAR AWARDS

It has been a long time since there has been a significant award for hams who have been outstanding, and there should be such an award.

We should have some award for the ham who, in the estimation of the rest of us, has done the most to help amateur radio. This might be in a technical development, a pioneering effort, an emergency situation, or perhaps just plain hard work hamming such as in traffic handling or DXpeditioning.

In order to provide a recognition of work done to benefit amateur radio, *73* will award a "Ham of the Year" award each year at one of the major hamfests. Nominations for this award must be made by readers and each nomination must be accompanied by a sheet giving the reasons for the nomination in 500 words or less. Nominations from clubs citing a club member who is worthy of recognition are particularly solicited.

Nominations will be published in *73* and the readers asked to vote for the "Ham of the Year."

In the past, we have had several amateurs who were worthy of lasting honor. I can think of Lloyd and Iris Colvin for their exemplary DXpeditions. There is John Kraus W8JK and his antenna work. Sam Harris W1FZJ and his moonbounce work should have gotten an award. John Costas and his double sideband developments deserve mention. Jack Babkes W2GDG came up with narrowband FM—another winner.

The deadline for all nominations for "Ham of the Year" will be November 15, 1978. This will give us time to get them into the February issue of *73*. This in turn would allow a month for the readers to send in their votes and a winner could possibly be announced as early as March at Dayton.

Please be sure to mark all entries "Ham of the Year" when you send them in.

SAROC CANCELLED?

Rumor has it that the winter CES has put the kibosh on SAROC for January, 1979, and that, if it is to be run at all, it will have to be moved to some other dates.

There was no question that with CES in town there was no real room for any other shows. CES pulls 40,000 or more in attendance and has exhibits covering most of the consumer end of electronics. The 1978 CES in Vegas was a big hit with everyone who went to see it. I spent far more time there than at SAROC, as did almost everyone else.

SAROC is one hamfest we could well do without, anyway. It has been years since there has been a good program there and the attendance has been getting smaller and smaller, year after year, as hams find themselves without reserved rooms, and with nothing more than a few commercial exhibits to see for their money.

Tufts Electronics went to SAROC to exhibit last January and said never again. I heard the same comments from many other disillusioned exhibitors and attendees. It's a pity . . . the show is the right time of the year and in a good spot, if only it were run for amateurs instead of as a way to make a maximum amount of money for the chap who puts it on.

TEN LIVES!

The band plan for ten meter channelized communications is to move 27 MHz CB rigs up exactly 2 MHz, normally a simple change requiring a new crystal. This scheme puts channel 1 on 28.965 MHz. It is suggested that this be used as a listening channel in order to help alert channelized operators to band openings and to help with propagation studies. It is recommended that ten meter beacon transmitters running low power be set up on 29.005 MHz, which is channel 4. Those with 40-channel sets will be able to hear OSCAR on channel 40 and are asked not to transmit on this channel and thus perhaps interfere with OSCAR. Both the Standard and Bristol 10m sets are set up for this band plan. The Bristol Ham-100 transceiver runs 100 Watts and thus does not need a hard-to-get 10m amplifier. *73* is interested in reports of DX worked or any unusual contacts made using this channelized mode.

NEW GIMMICK

Last year, when I went to Washington to testify before the FCC on the subject of ten meter linear amplifiers, I told them flatly that trying to write rules against amateur radio equipment as a way to stem the tide of CB amplifiers was a waste of time. There is always a way for a crook to get around the rules.

Sure enough, the ink on the new regulations was hardly dry when the first mail-order ads for amateur radio ten meter CW transmitters were getting to CBers. The ads, followed a day or so later by a letter in a plain envelope which gave explicit instructions on converting the ten meter CW rig into a nice eleven meter linear amplifier, showed the usual cruddy design and construction we have come to identify with underground CB amplifiers. They obviously haven't gone very far underground.

So what is the answer? It is the same as it was when I testified before the FCC. If they want to curb this type of activity, the FCC has to bite the bullet and go after it strongly . . . and to hell with the political pressures. Well, both of us know that the FCC is never going to do such a thing. The CBers have too much clout and amateurs are almost totally impotent, so amateurs get it in the neck.

In view of the above, it is a bit difficult for me to get all uptight over the "ham" 10m CW rigs. How about you?

MAY WINNER

The most popular article in our May issue, as voted by our readers, was "Official FCC RFI Report," a reprint of a handbook produced by the FCC. At the suggestion of Mr. C. Phyll Horne, Chief of the Field Operations Bureau, we have donated the $100 prize to our favorite charity.

Another Trick for the 22S

—now it's a remote control system

Richard M. Kriss WB7SHW
8130 Via del Futuro
Scottsdale AZ 85258

Like many Icom 22S owners, I have enjoyed expanding the frequency capability of the unit. The trick I have discovered is one that will be of interest to unmodified-IC-22S owners, as well as those who have the VIP-switch or the DIP-switch modification already incorporated.

Briefly, the trick is a modification of the DIP-switch programmer that was described in detail by WA4VAF in the June, 1977, issue of *73 Magazine*. The modification is to use three BCD switches in lieu of the 8-pin DIP switch.

For those interested in the programmer, I suggest you get a copy of Bill Richard's (WA4VAF) article entitled "More Channels for the Icom 22S." The article is an excellent explanation of how to activate channel 23 and how to bring the matrix board connections to the Icom's 9-pin accessory plug. Photo A shows how I implemented Bill Richard's basic modification. The significant difference (Photo B) is that I mounted the DIP switch on an umbilical cord and enclosed it in a box with magnets so that it could be mounted on the top of the radio. Note in Photo C that I did not use the PC board suggested in the article. The diodes are mounted on the DIP switch.

The DIP switch works fine. The only problem is

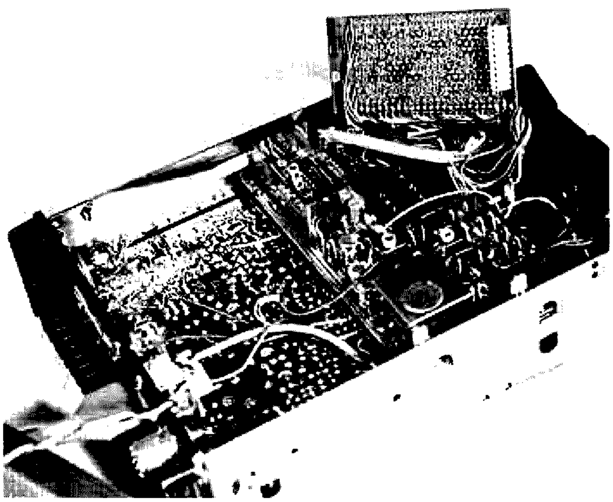

Photo A.

Top back view of BCD switch

NC	●	8	NC	●	8	NC	●	8
D2	●	4	D5	●	4	NC	●	4
D1	●	2	D4	●	2	D7	●	2
D0	●	1	D3	●	1	D6	●	1
9V	●	C	9V	●	C	9V	●	0

Back of BCD switch

From Icom 22S	#3	#2	#1 (thumbwheel position)
9 V	C	C	C (bus "C" together)
D0	1		
D1	2		
D2	4		
D3		1	
D4		2	
D5		4	
D6			1
D7			2

Note 1: Most BCD switches have connections on the back numbered C, 1, 2, 4, and 8 from bottom to top.
Note 2: The thumbwheel position numbers used above are numbered 1, 2, and 3, left to right, from the front view.
Note 3: Pin 8 on the BCD is not used, nor is pin 4 on position #1 (NC = no connection)
Note 4: The "C" positions should be tied together to bring the 9 volts into the BCD switch.
Note 5: Correct hookup is the key to the frequency lookup table in this article.

Table 1.

trying to push the right switches while mobile and trying to remember eight-digit numbers. I compared this problem with Jerry Armstrong WA7ZVT of Seattle, Washington. He gave me the idea and a lookup table for using a three-position BCD switch that several people in the Seattle area were using. Photos D, E, and F are pictures of my current programmer using a $1.95 three-position BCD switch. The key to the modification described in this article is the interface from the Icom 22S matrix

Frequency	Switch
146.010	154
.025	155
.040	156
.065	157
.070	160
.085	161
.100	162
.115	163
.130	164
.145	165
.160	166
.175	167
.190	170
.205	171
.220	172
.235	173
.250	174
.265	175
.280	176
.295	177
.310	200
.325	201
.340	202
.355	203
.370	204
.385	205
.400	206
.415	207
.430	210
.445	211
.460	212
.475	213
.490	214
.505	215
.520	216
.535	217
.550	220
.565	221
.580	222
.595	223
.610	224
.625	225
.640	226
.655	227
.670	230
.685	231
.700	232
.715	233
.730	234
.745	235
.760	236
.775	237
.790	240
.805	241
.820	242
.835	243
.850	244
.865	245
.880	246
.895	247
.910	250
.925	251
.940	252
.955	253
.970	254
.985	255
147.000	256
.015	257
.030	260
.045	261
.060	262
.075	263
.090	264
.105	265
.120	266
.135	267
.150	270
.165	271
.180	272
.195	273
.210	274
.225	275
.240	276
.255	277
.270	300
.285	301
.300	302
.315	303
.330	304
.345	305
.360	306
.375	307
.390	310
.405	311
.420	312
.435	313
.450	314
.465	315
.480	316
.495	317
.510	320
.525	321
.540	322
.555	323
.570	324
.585	325
.600	326
.615	327
.630	330
.645	331
.660	332
.675	333
.690	334
.705	335
.720	336
.735	337
.750	340
.765	341
.780	342
.795	343
.810	344
.825	345
.840	346
.855	347
.870	350
.885	351
.900	352
.915	353
.930	354
.945	355
.960	356
.975	357
.990	360

Simplex

Simplex

Table 2. Icom 22S BCD switch programmer.

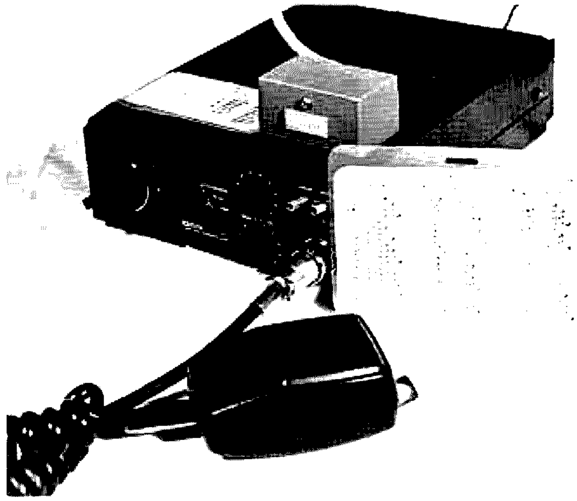

Photo B.

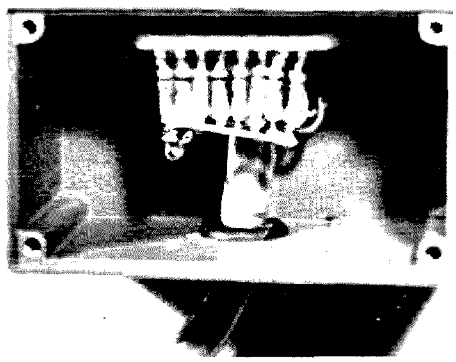

Photo C.

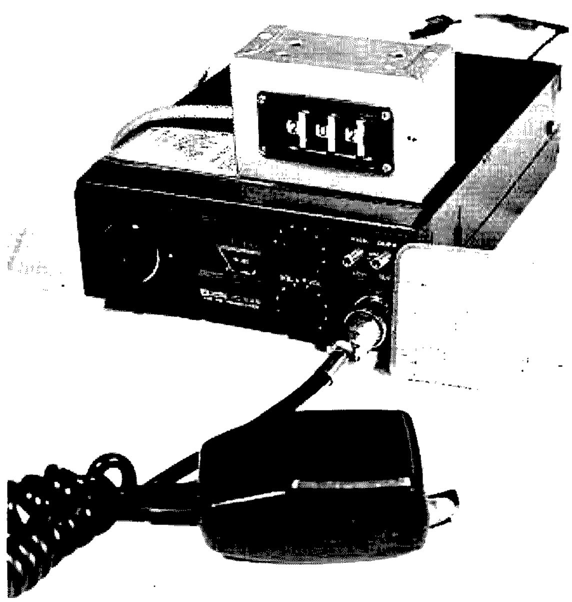

Photo D.

Frequency	Switch	
145.350	100	
.365	101	
.380	102	
.395	103	
.410	104	
.425	105	
.440	106	
.455	107	
.470	110	
.485	111	
.500	112	
.515	113	
530	114	
.545	115	
.560	116	
.575	117	
.590	120	
.605	121	
.620	122	
.635	123	
.650	124	
.665	125	
.680	126	
.695	127	
710	130	
.725	131	
.740	132	
.755	133	
.770	134	
.785	135	
.800	136	
.815	137	
.830	140	
.845	141	
.860	142	OSCAR
.875	143	
.890	144	
.905	145	
.920	146	
.935	147	
.950	150	
.965	151	
.980	152	
.995	153	
MARS and CAP frequency		
148.005	361	Out of band
.020	362	
.035	363	
.050	364	
.065	365	
.080	366	
.095	367	
.110	370	
.125	371	
.140	372	
.155	373	
.170	374	
.185	375	
.200	376	
.215	377	

Table 3. Icom 22S extended range BCD switch program.

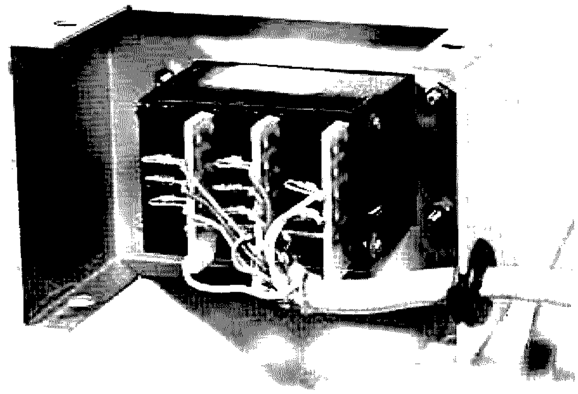

Photo E.

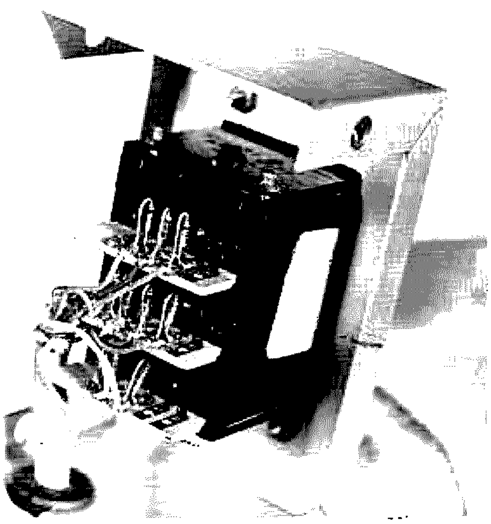

Photo F.

board to the BCD switch. By studying Photo F and Table 1, you should be able to make the modification with no problems. Note how the diodes and hookup wires are mounted on the switch. Be sure you cut the track on the switch to provide a mounting surface for the diodes.

Other keys to this modification are the lookup tables (Tables 2 and 3) that you can cut from this article for future use. The lookup tables give you the capability of going from 145.35 MHz (switch position "100") to 148.215 MHz (switch position "377") in 15 Hz steps.

In the Phoenix area, one is hard pressed to make use of all 22 channels of the standard Icom 22S, so I could not justify the expense of the $25 to $30 VIP switch. I do travel to other areas and like to have the capability to temporarily reprogram my 22S. The DIP switch gave me this capability, but the BCD programmer is easier to use and may be of interest to other Icom 22S users. It can be used with the VIP switch to pick up the missing frequencies.

As indicated, I do not claim credit for this modification. Credit goes to Bill Richards WA4VAF for the DIP switch idea, Jerry Armstrong WA7ZVT for the BCD conversion, Nick Hall WB7RZR for the photographs, Jack Hanny WB7SAF who revised the lookup tables, and Earl Sexton who helped me with the assembly. ■

Kenneth D. Williams WB3ELV
7013 Wolfree Lane
Rockville MD 20852

"Stop Timeouts!" Revisited

—*PC board for K3VTO's timer*

I read with great interest the article "Stop Timeouts!" by K3VTO in the May, 1977, issue of *73*. It is nice to know that others have trouble getting electrons to go where the schematic diagram indicates they should go. After reading the article over several times, I decided to build the 10-minute timer even though I had no experience with TTL circuitry. I also thought that this would be a good time to try my hand at designing a printed circuit board to avoid the rat's nest of wires.

I purchased several packages of printed circuit (PC) drafting aids (Heathkit) and began the task of transforming K3VTO's circuit diagram to a printed circuit diagram that I could photoprocess onto a copper PC board. I checked and double-checked the wiring to be sure that I didn't leave out a connection. Finally, the drawing was complete and I was ready to transfer the diagram to the copper board. Needless to say, I spent several evenings and one weekend trying to photoprocess my circuit board. I even followed the suggestions of KL7AE on page 57 of the April, 1977, issue of *73*.

At last, I got an image on the copper, and, within minutes, I had the printed circuit board ready for drilling the many holes.

I mounted all the goodies on the board, connected the 6.3 V transformer to the power supply section, and, without fear, plugged it in. Alas, the decimal point did not blink, the readout remained on "8" no matter what, and the alarm howled constantly. I again checked the wiring diagram against the PC board and could not find any apparent discrepancies. So I checked with several other hams and was informed that TTLs must be attached to Vcc (+5 volts) before they will function properly. Also, they suggested that all unused connections be tied to Vcc. So I connected pin 16 of the 7448 and pin 14 of the 7400 to Vcc and pin 7 of the 7400 to ground (these connections were omitted from K3VTO's diagram).

With that, the timer was working with just a few glitches. After replacing several of the ICs, the timer finally worked as well as K3VTO claimed.

I made several changes in the schematic when I designed the PC board. I used a dual 555 IC (556) instead of 2 single 555s and provided connections for a variable volume control. Fig. 1 shows my PC board

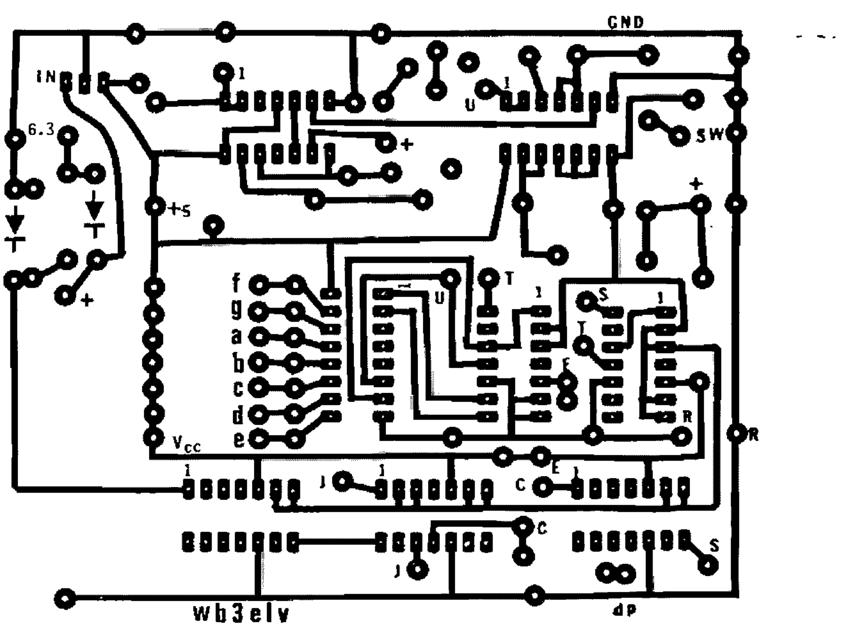

Fig. 1. PC board for 10-minute timer, including the 5-volt power supply.

design, which includes the +5-volt power supply. No provision was made to mount the 6.3-volt transformer on the PC board. I found a 2 x 4 x 6-inch enclosure at Heathkit which works quite well even with the larger readout (0.8 LED).

I must admit that, if the circuit had worked the first time, I would only have a 10-minute timer and would still not know anything about TTL circuitry. As it is now, I have studied and experimented with simple TTLs to the point where I can even check them for proper operations before using them in a circuit. I feel that the kinds of projects that are featured in *73* are beneficial to the beginner, as well as practical for the old-timers, and help prepare them for more sophisticated circuitry. ■

Predrilled PC boards are available from the author for $3.50 each.

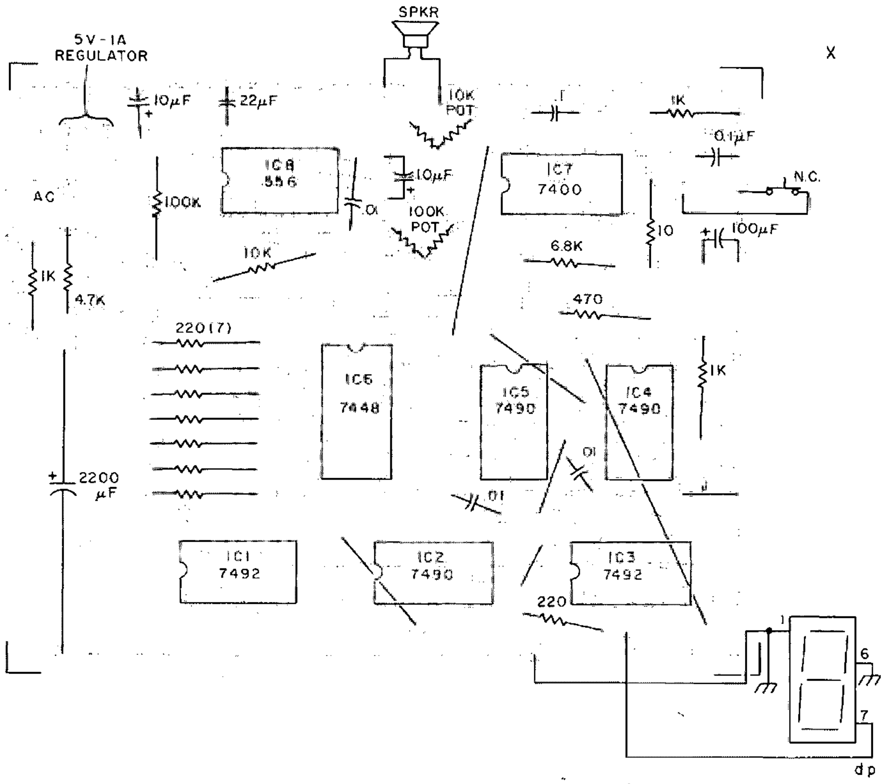

Fig. 2. Parts placement (foil side view).

David E. Stanfield
3408 Catalina Dr.
Atlanta GA 30341

Maintain Control!

—keeping power tools in their place

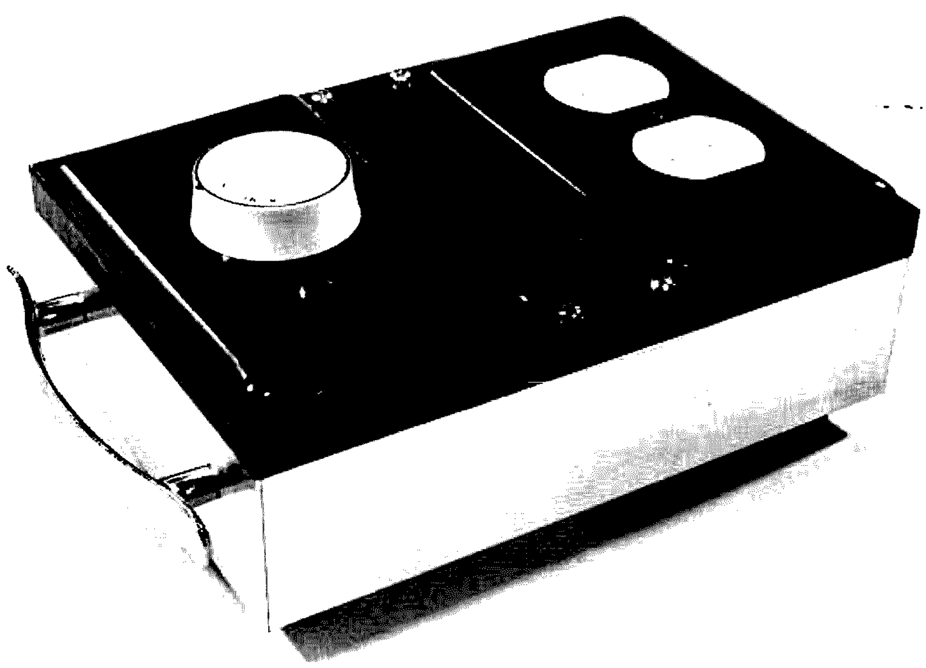

As this photo shows, the unit is fairly compact. What isn't shown is how easy the whole project is to put together.

No matter how carefully I use a center punch, it seems that the bit invariably slips as soon as I trigger an ordinary electric hand drill. And, most of the time, the bit will suddenly bite into the metal after it has slipped out of place. When this happens, I end up with a hole in the wrong place. If this isn't an earth-shaking problem, it is certainly annoying.

My method of dealing with this situation is simple and easy to apply. It is low in cost and can be used for a number of applications. It makes a great project for the beginner but can also be used by the pro.

Essentially, what I did was wire a light dimmer control in series with an ac socket and mount everything in a box. When I plug an electric drill into the socket, I can conveniently control its speed by turning the knob on the dimmer. At very low speeds, the bit doesn't try to wander off. Once I have the hole started, I can crank up the speed and finish the job.

After I built the unit shown in the photo, I found that I could use it to control the speed of a saber saw. Low speeds make it easy to start cuts accurately. Once started, I found it easier to control the saw by running it at about half speed.

I also found that the unit does a fine job of controlling the tip temperature on my soldering iron. Due to thermal lag, it takes a little time to find the proper setting of the knob, but, once you find it, it's easy to reset. This allows you to operate at reduced temperatures when soldering sensitive parts and then pour it on when you need extra heat.

Finally, I use this unit to control up to 600 Watts of photographic flood lamps. Before, my only means of regulating the intensity of light on the subject was to move the lamps closer or fur-

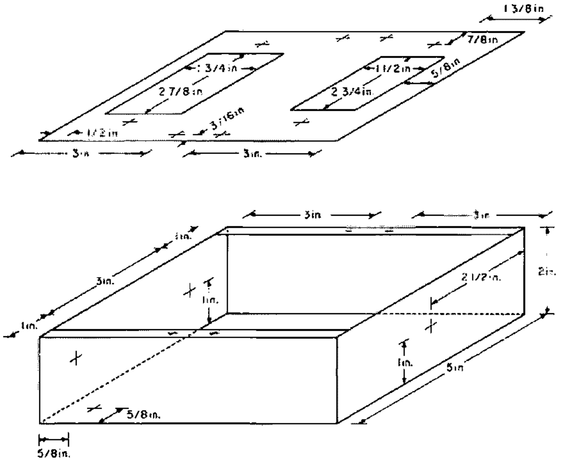

Fig. 1.

Parts List

Chassis – 5 x 7 x 2 inches, Radio Shack catalog number 270-246
Ac wall socket
Ac extension cord – 6 feet long (used as power cord)
Ac wall socket cover
Ac wall switch cover
Handle-kitchen cabinet type
Light dimmer control, 2-wire type
Machine screws, nuts, and lockwashers
Wire caps
Hookup wire
Rubber feet
Self-adhesive paper
Sheet of scrap wood 5 x 7 x 1/8 inches (for top piece)

ther from whatever I was photographing. Now I turn a knob. I should add that this procedure isn't recommended for color work, as the shift in color temperature is quite pronounced.

There isn't much point in my giving detailed instructions for a project as simple as this. Fig. 1 can be used to locate the holes and openings in the chassis and top plate, if you wish to duplicate my unit. All but four of the holes are drilled slightly larger than the machine screws which will pass through them. These screws are then secured with nuts and lock washers.

On opposite sides of the top of the chassis are two ridges. The four holes I drilled in them are used to fasten the top plate and are drilled slightly smaller than the screws used in them. If care is used, these screws will act as self-tapping screws and thread their way through the ridges. This eliminates the need for trying to use nuts

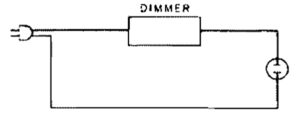

Fig. 2.

under the ridges, which would be difficult, at best.

And finally, the hole drilled in the right end of the chassis is used for the power cord. It must be drilled large enough for both the power cord and a protective grommet. As you can see in the photo, I used self-adhesive paper to cover the top and seal it to the chassis. A sharp hobby knife made trimming excess paper an easy task. The handle makes it a very portable unit and serves as a good place to wrap the cord. I didn't include an on/off switch, as one is built into the dimmer. If you don't care for the uses I've suggested for this controller, you can always use it to dim room lamps. What you do with dim lighting is beyond the scope of this article. ■

Cliff Wiginton, Sr. WB5BSG
RFD 1, Box 208
Burnsville MS 38833

CB to 10

—part XI: Hy-Gain's PLL rigs

Almost every late-model CB rig on the market is capable of operating on 10 with excellent sensitivity and output. No model requires very extensive changes to modify. I picked an inexpensive and easily converted rig for my first research run and achieved some rather gratifying results. A little fancy telephone work got me in touch with Charlie Conners KØNG in Nebraska, who I knew had spent many hours in design work on PLL circuits. As it turned out, Charlie has done extensive work on 10 meter conversions, and, without his advice and knowledge, my conversion could have been very painful the first time.

The Hy-Range model 681A,[1] which I chose for conversion, can be modified in about an hour and performs well (better than manufacturer's specs). Is it phase locked loop? You bet – it only requires the purchase of one crystal instead of two, four, or possibly six on some rigs, and the receiver sensitivity is right on with a little realignment. No circuit changes are necessary, and there is no compromise on sensitivity.

Do I have you interested? Get out your alignment tool, VTVM, and signal generator (necessary equipment), and set aside one hour of your day's schedule.

Finding your way inside should be no problem. Locate X101 and replace it with a new crystal which is determined by the formula: (N/2) + 9.510 MHz, where N = kHz above CB channel 1 (26.965) that you wish to operate.

For example, suppose we move up exactly 2 MHz to 28.965 for channel 1. Then, 28.965 - 26.965 = 2000 kHz; 2000/2 = 1000 kHz or 1 MHz; 1000 kHz + 9.510 = 10.510 MHz for new crystal frequency.

With the new crystal installed, set the channel selector to channel 1, attach a VTVM to TP8 on the PC board (junction of R114 and R115), and adjust T101 for 1.5 V dc ± .1 volt. This step is critical and must be done carefully, as it allows the vco to operate within "capture" range of the PLL circuitry. This accomplished, loosely couple an accurate signal source to the antenna jack, flick the channel selector to channel 11, and carefully peak T104, T105, T106, L112, and L115 for maximum receive sensitivity.

Next, attach a power meter and dummy load to the output and key up the transmitter. Watch the power meter and tune T102, T103, L103, L104, L106, L109, and L110 for maximum power output. If the power output exceeds 4 Watts at this point, readjust L110 counterclockwise until it is 4 Watts or less. This last step will assure an output free of spurious radiation. Also, remember that these adjustments are interactive and should be gone over more than once for peak performance.

And there you are! It's a first class 10 meter rig in anybody's book – in about an hour.

Now you need an antenna for the little jewel. There is one CB antenna on the market that will operate "as is" on 10 with less than 2-to-1 swr through a full megahertz. The M400 "Starduster" made by Antenna Specialists is a natural, the only modification necessary being to change the coax connector from the CB rig to the 10 meter rig. But, for the ham who's got to have everything just right, slip the capacitance hat off the top radiator, prune the radiator to 96" and the three radials to 98", and you have a fine vertical antenna which will show unity gain with a good dipole.

A mobile antenna presents little more difficulty than a simple retuning. Most commercially produced mobile CB antennas fall into three categories, and all can be modified successfully with very little effort. Quarter-wave whips are simply pruned to resonance with an swr meter in the line. Center- and top-loaded antennas usually have an adjustable metal whip which requires a slight shortening.

Helically wound antennas may be carefully shortened and resealed against the weather. There's nothing really difficult about the conversion, and most can be accomplished in 30 minutes or so.

By this point, you should have under $100 and about an hour and a half worth of time invested in a slick 10 meter station. ■

Reference

1. Hy-Gain model 682 uses the same conversion. Models 2680, 2681, 2682, and 2683 require a different crystal formula: Crystal X101 = N/3 + 11.80666 MHz, but tune-up is exactly the same. Service manuals (very comprehensive) are available from: Hy-Gain Electronics, 4900 Superior St., Lincoln, Nebraska 68504, for $5 each.

Active Voltage Divider

—for dividing active voltage

P. G. Lefevre PY1AQL/CT1EM
Vasco Camara 9A
Carcavelos, Portugal

If you intend to perform experiments that require dual power supplies and you only have a single-ended supply, then the circuit in Fig. 1 is for you. Pin numbers are for the mini-DIP or TO-5 packages.

Actually, it is nothing more than a voltage follower, just textbook stuff, but maybe not widely known in hobbyist circles. As its name implies, the operational amplifier, by virtue of its intrinsic properties, will cause the voltage at its output to follow the voltage impressed upon its noninverting input. This voltage can be conveniently selected by means of a potentiometer.

The op amp's output will then play the role of a "synthetic" ground, and you will enjoy the possibility of selecting the potential of the ground terminal, provided that it does not come closer than 3 volts to either supply line.

In addition to the above limitation, the maximum current output of the op amp will dictate the maximum current differential between the two branches of the circuit that it can handle. If the two currents are identical, the op amp will be just loafing along and, theoretically, there will be no current whatsoever flowing into or out of the op amp. If, however, one of the two branches draws more current than the other, the op amp will have to source or sink that difference. See Fig. 2. The arrows indicate conventional current flow.

The 741, like most other op amps, is internally protected against short circuits and can indefinitely withstand a short between its output and either supply line. Therefore, do not be afraid of blowing up the device. If you try to exceed its capabilities, it will just refuse to cooperate, and you will lose control of the voltage at the ground terminal.

This limitation raises another question: How much current can you expect out of this circuit? There is not one single answer to this question. If the positive and negative currents are nearly identical, the limitation will be imposed by the capabilities of the single-ended supply, but if, on the other hand, those currents differ widely, the limitation will be imposed by the maximum output of the 741. It so happens that this device was never intended to be a current driver and, in fact, manufacturers do not guarantee or even specify the current that you can expect out of one of those little beasts. If you sift through available literature, you will see this parameter quoted at anywhere between 5 and 15 mA.

Confronted with this situa-

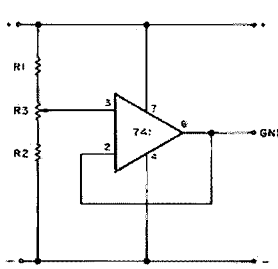

Fig. 1. Pin numbers are for the mini-DIP and TO-5 packages.

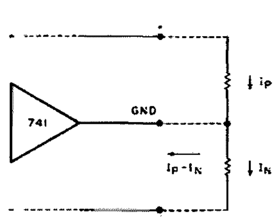

Fig. 2(a). Current at the positive branch is greater.

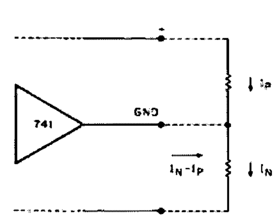

Fig. 2(b). Current at the negative branch is greater.

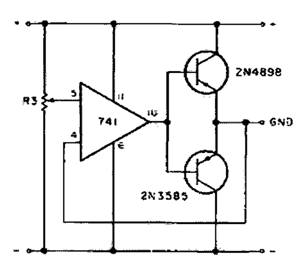

Fig. 3. Pin numbers are for the 14-pin DIP.

tion, I decided to find out for myself and, scrounging around, was able to gather some twenty-five different units from several manufacturers and in different packages. Their short circuit current was measured with unexpected results: Mini-DIPs and metal cans gave about 16 mA, whereas 14-pin DIPs gave a surprising 30 mA!

Inasmuch as the output current limitation is temperature dependent, I also ran some tests with heat sinked DIP packages with inconclusive results, and it is doubtful whether it is worth the trouble.

There are in existence other op amps capable of greater current output, but they are not only difficult to find, but expensive, as well. The circuit of Fig. 3 is a more practical solution if the unaided 741 is not capable of delivering the performance you need. I designed this circuit after unsuccessfully trying 2 different designs published on separate occasions by trade magazines. The first design only worked if the negative branch drew a heavier current, and the second one was plagued by oscillations.

Device	Polarity	BV_{CBO}	BV_{CEO}	BV_{EBO}	I_c	P_d	Condition
S9101	NPN	60	60	5	4 A	40 W	Ambient T = 25°C
S9121	PNP	60	60	5	4 A	40 W	Ambient T = 25°C
TIP 110	NPN	60	60	5	2 A	50 W	Case T = 25°C
TIP 115	PNP	60	60	5	2 A	50 W	Case T = 25°C

Table 1.

In the unit I built, which is now a permanent fixture of the workbench at CT1EM, I used 2N4898 and 2N3585 transistors for the simple reason that they were available from my junk box. Any power transistor in a TO-66 or TO-220 package should be okay. It would be futile to try a big brute like a 2N3055 because the 741 would be unable to provide the base current necessary to fully exploit its power capabilities. With the transistors above, my unit can provide currents with an imbalance exceeding 1 Amp.

If you are still not satisfied with that, you may use Darlington amplifiers instead of plain transistors. These amplifiers from the outside look just like any transistor, and they are inserted in a circuit as if they were just that. The main characteristic of such devices is a phenomenal static current gain. Therefore, the skimpy current output of even a 741 will be sufficient to provide the necessary base drive. Suitable devices would be Motorola's HEPS9101 and HEPS9121. Texas makes the TIP 110 and the TIP 115, which are lower in power capability and would require heat sinking. See Table 1 for the main parameters.

On the schematic, R_1 and R_2 are optional and, if installed, should be about 10% of R_3. The pot should be about 50k and the bypass capacitors (from ground to the supply rails) should be .1 ceramic disc. It will be advantageous to use the 14-pin package, rather than the mini-DIP or metal can, and have all pins soldered to the board rather than socketed, for improved heat transfer.

Before you decide to go the Darlington way, make sure that your power supply has enough beef to exploit the performance afforded by the very high current gain of these devices. Remember that the tremendous amplification is obtained only under static conditions and falls off quite rapidly with increasing frequency. Eventually you may run into a circuit whose current demands fluctuate too rapidly for the Darlington to follow. ■

Charge!

—your nicads

E. E. Buffington W4VGZ
2736 Woodbury Drive
Burlington NC 27215

When I began to think seriously about a charger for my portable radio, I looked through all my old issues of *73 Magazine*. I found quite a few articles on this subject, but none of them would fill the bill for the kind of charger that I needed. My new charger should charge at the proper rate until the battery is full and automatically switch to a trickle.

I have observed two properties of nicads whenever they become fully charged. One is the rise in temperature that occurs due to the inability of the cell to make a chemical conversion, which is dissipated as heat. The other is the slight rise in cell voltage from approximately 1.35 to above 1.4 volts. I don't know whether this rise in voltage is due to the increased temperature or is a physical property of a "flooded" cell quite apart from the temperature. A scheme of placing a thermistor next to the cells to control the charge was abandoned in favor of a means of sensing the voltage increase.

The general circuit is shown in Fig. 1. The filtered dc is current limited by R1 to a value one-tenth of the Ampere hour rating of the battery. Zener diode D1 provides a voltage offset so that all the voltage variation will appear across R2. This pot is adjusted so that the SCR will trigger on the voltage rise that occurs at the end of charge. Whenever the SCR triggers, R3 and R4 shunt most of the current away from the battery so that the battery is getting only a trickle. The LED will light, showing that the end of charge has been reached.

The switch S1 is used to take the SCR out of conduction and start the charge cycle.

Method

As there are many combinations of transformer voltage and number of nicad cells possible, I am going to leave the calculation up to you and will show the step-by-step design procedure. Only seven steps are required for your own situation:

(1) Specify battery — N = number of cells, A = Ampere-hour rating;
(2) Specify transformer — E = rms secondary voltage, V = 1.414E - 1.4;
(3) Calculate capacitor value — C = A/120 V (farads);
(4) Calculate R1 — R1 = [V - N(1.4) - 0.7]/(A/10);
(5) Calculate offset zener voltage — D1 = N(1.4) - 2.7;
(6) Calculate R3 — R3 = [N(1.4) - 0.7]/[(A/10 - A/100) - .01];
(7) Calculate R4 — R4 = [N(1.4) - 1.8] 100.

Example

Assume you have a battery of ten cells rated at 500 mAh and a transformer rated at 24 volts (a common voltage available in most junk boxes).

(1) N = 10, A = .5;
(2) E = 24, V = 32.5;
(3) C1 = .5/120(32.5) = 128 uF (use 200 uF, 35 V);
(4) R1 = (32.5 - 14 - .7)/.05 = 356 (use 360 Ohms);
(5) D1 = 14 - 2.7 = 11.3 (use 11 or 12 V zener);
(6) R3 = (14 - .7)/(.05 - .005 - .01) = 380 (use 390 Ohms);
(7) R4 = (14 - 1.8)100 = 1220 (use 1200 Ohms).

Construction

If you presently have a desk-top charger for your portable, you can modify the existing circuit. If you're not that lucky, then you may still get a professional-appearing unit by ordering the plastic parts for the charger from the manufacturer. I have built this unit for both a GE-PE and Motorola HT-220. Other portables have a jack for plugging in a charger. In this case, you can build your charger in any of several "project box" enclosures available at hobby electronics stores.

Testing

Substitute a variable resistor for the battery, and, with R2 turned off (wiper at ground), adjust the battery substitute until the desired trip point voltage is reached (1.4N volts). Then adjust R2 until the LED lights and stop there. Now connect your battery and push the switch; the LED should go out. The battery voltage should be between 1.25 and 1.35 volts per cell during charge and rise above 1.4 volts per cell at the end of charge.

Parting Shots

You should ~~not~~ trust this charger if ambient temperature is allowed to vary from that which is considered comfortable by most people. Too much heat or too much cold could alter the trip point. You may want to instrument this charger with a milliammeter and measure the various currents for the first few charge cycles, just to gain assurance that it is working okay.

I think I have told you all I know on the subject (not much really), but, if you have any questions, send an SASE and I will reply. ■

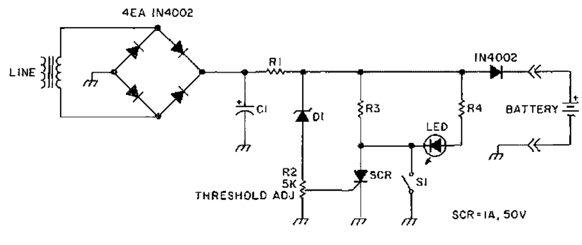

Fig. 1. General schematic for automatic-shutoff battery charger. For component values, see text.

Light Right?

—do-it-yourself photo exposure meter

Joy L. Mills, Jr.
5960 Dueber Ext.
East Sparta OH 44626

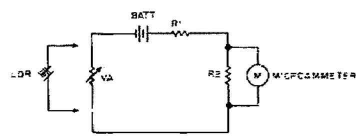

Fig. 1. Basic circuit for measuring resistance.

Many exposure timing devices have long been available to the photographer. Once this factor has been selected, we only need a dependable method of measuring the intensity of light striking the printing paper emulsion. My project, which I shall describe in this article, deals with a proven device for making these light intensity measurements with accuracy.

For many years I used the common and cheaper device consisting of a 117 volt ac line source, a neon lamp, a photo dependent resistor (LDR), and a variable resistant element potentiometer with linear-dial scale.

I learned to live with this for several years, and even after getting into color printing, decided that I was using too much time coordinating the enlarging lens aperture with the rheostat setting (which required two hands). A very unreliable potentiometer didn't help either. I always ended up in the ball park with this method, but not always exactly where I wanted to be. With many solid state devices and LDR cell types available, I embarked upon a new project, and after over two and one half years of actual use and testing, I can now present the project briefly. It can be built by anyone with radio equipment construction experience.

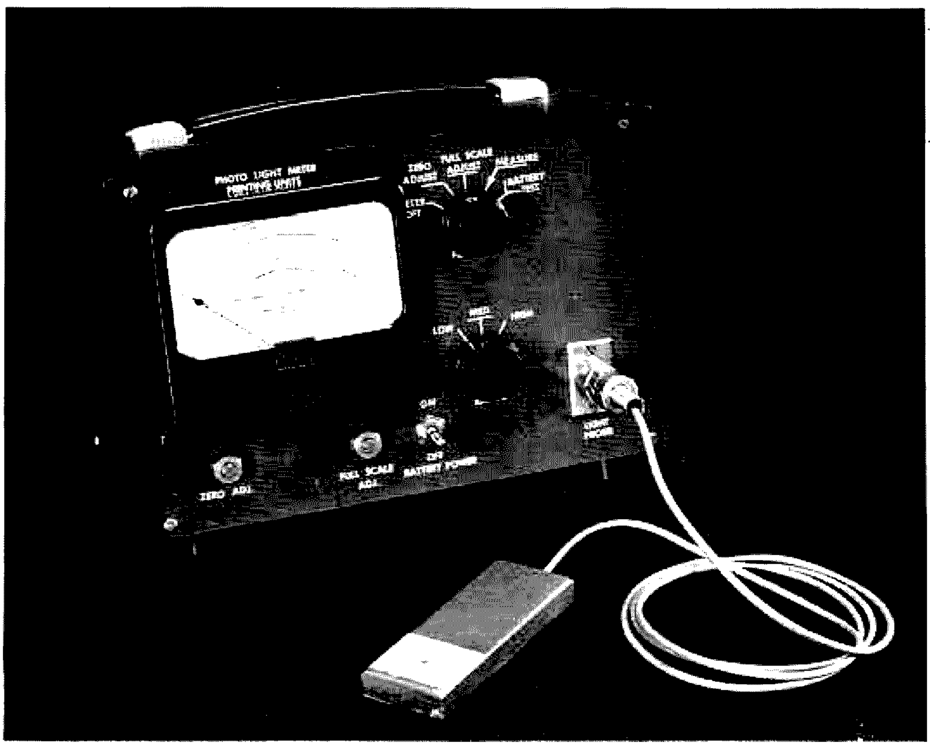

Fig. 2.

The instrument, a device for measuring light density, consists of three basic parts:
1. Light sensitive probe.
2. Dc differential amplifier.
3. Specially calibrated meter and face plate.

The Light Probe

The probe shown in Fig. 3 is constructed of semi-hard wood, such as poplar, a Clairex type 905HN light dependent resistance element, a 5 ft. cord (Belden #8411), and a standard Cannon

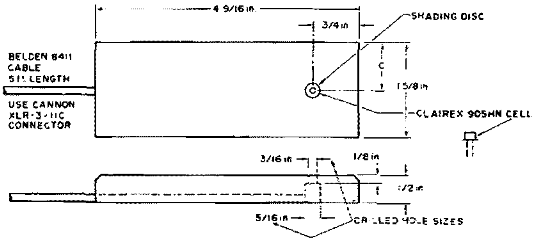

Fig. 3. Easel probe.

XLR-3-11c cord end-type connector. Epoxy cement and filler such as "Duro Epoxe #200H" manufactured by Woodhill Chemical Sales Corporation, Cleveland, Ohio, is used for filling and sealing the unit. I chose the Clairex 905HN light cell (after I had conducted tests on many of their types) because of its low "residual" characteristics, especially at the extremely low light levels used on most photographic sensitive papers. The sensitivity of the cell, along with its small cell aperture, makes it very complementary to the final calibrated probe. In constructing the probe, the case is grooved out through the center of the entire length, deep and wide enough so that the Belden type 8411 shielded cable will embed clear of the bottom probe surface. The photocell is mounted by insertion from the bottom of the case through a 5/16" hole drilled to within 1/8" of the top of probe case (where the hole continues through the top at 3/16" diameter). After the cell has been positioned and set, the two leads are connected to the shielded cable and soldered lightly (one center conductor, the other the shield). The small splices are then taped with plastic tape. Press the splices and cable into the groove channel, and then fill the entire groove channel with the epoxy cement. After over-filling the groove with epoxy cover, case the bottom with masking tape to prevent epoxy from seeping out (until it is set, in about 5 hours). After the epoxy has hardened, the masking tape can be removed and the case sanded down on the bottom to a finished surface. The top of the probe can now be painted white to within ¼" of the cell.

The Cannon XL3-11c can now be attached to cable end. Connect the shield to pins 1 and 2, and the center conductor to pin 3. Since the probe is not wired permanently to the electronics unit, more than one probe may be prepared for use with the instrument with flexible applications.

Calibrating the Light Probe

Since the photocells vary considerably (even within the same manufacturer's type) as to the effect they will have in this particular application, it was necessary in designing my system to permit or require aperture reduction in all cases to permit proper and consistent calibration of the instrument.

The procedure used to calibrate the probe requires the following equipment: a controlled light source (use your enlarger), an accurate standard exposure meter, and an accurate "ohmmeter" (range to over 100 megohms).

To begin, arrange the top of the probe at the exact level along with the exposure meter facing the projected light source. The exposure meter should be in the "direct" or "unshaded mode" if it has these options. Adjust the ASA setting on the exposure meter to 100. Adjust the projected light level (at least 1.5 ft. from the meter) using the enlarger lens aperture adjustment until the "F stop" indication is 5 for 1 second exposure.

With the "ohmmeter" or resistance measuring device connected to the end of the probe cable leads (shield and conductor), observe the resistance value. Normally, with the cell being used in this probe, the reading will fall in an area between 3.5 and 5.5 megohms. The cell is now calibrated by cementing a disc with a center hole or aperture drilled to a diameter large enough to produce a resistance reading of 6.4 megohms. The inside disc hole surface should be painted with flat black paint, especially if it has a reflected metal surface. The disc cemented to the top surface of the probe should be truly

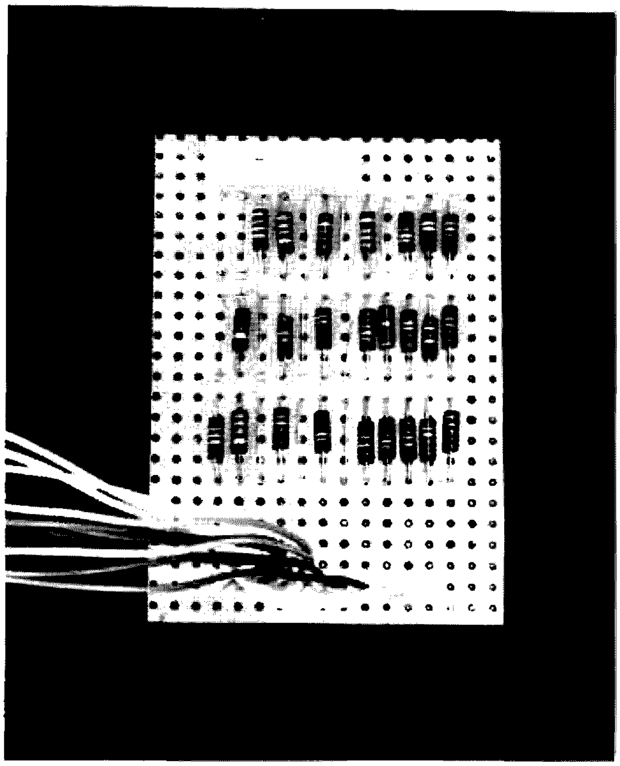

Fig. 4.

Resistance at P1, 2 & 3 term.	Linear scale reading
LOW RANGE	
78 megohms	1 (10%)
62 megohms	3 (30%)
55 megohms	5 (50%)
50 megohms	6 (60%)
42 megohms	8 (80%)
35 megohms	10 (100%)
MEDIUM RANGE	
70 megohms	1 (10%)
50 megohms	3 (30%)
35 megohms	5 (50%)
29.5 megohms	6 (60%)
16.8 megohms	8 (80%)
6.4 megohms	10 (100%)
HIGH RANGE	
31.5 megohms	1 (10%)
21 megohms	3 (30%)
14.5 megohms	5 (50%)
11.3 megohms	6 (60%)
5.3 megohms	8 (80%)
0.5 megohms	10 (100%)

Table 1. Linear scale meter readings for corresponding resistance values placed across P1 terminals 2 and 3.

Fig. 5.

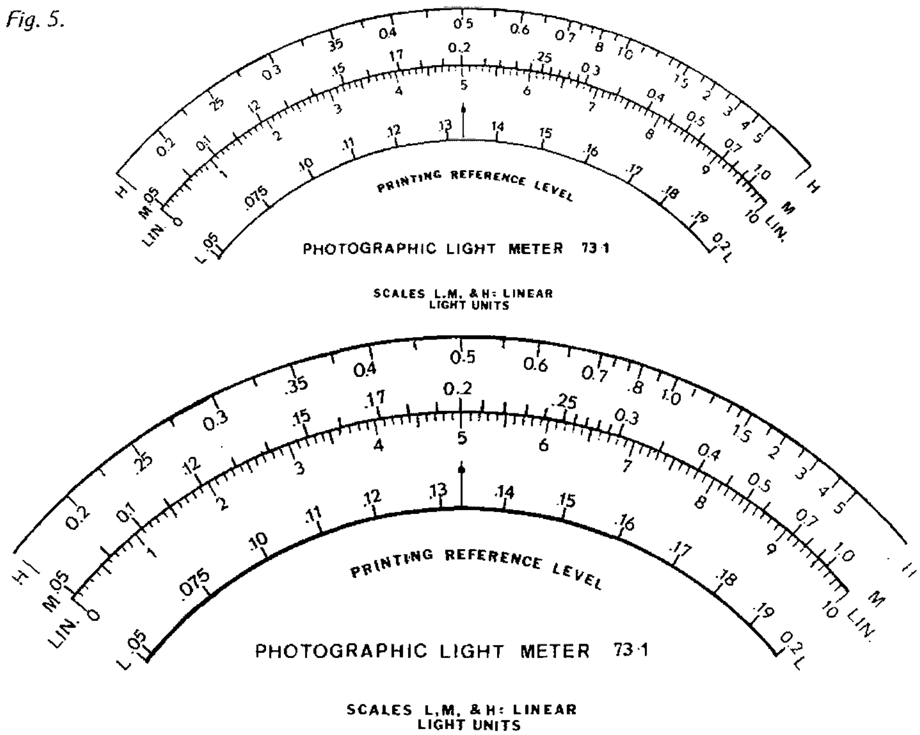

centered over the photosensitive cell. After the cement is set, the calibration should be rechecked. If the resistance falls short of 6.4 megohms, a slight additional amount of shading can be accomplished by small pen and black lacquer. The temperature in the room area while calibrating probe should be approximately 75°F. If lacquer is used for final shading, the calibration should be checked several hours later for possible drift. The Clairex cell face is glass, and if reasonable care is taken, the black lacquer may be scraped off without damaging the cell face.

The Electronics Amplifier System

The electronics system consists of a divider card and dc amplifier. The divider card is very critical, but circuit-wise very simple. Working with such high resistance values presents problems if

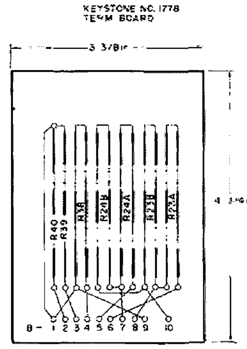

Fig. 6. Divider and Ref. card.

care is not taken to use materials that will prevent leakage in the circuitry; spray the entire card and resistor parts with clear lacquer under low humidity conditions after construction and calibration. I use several resistors in series to acquire most of the "total" values specified in this circuit, usually not exceeding 22 megohms each in value. Also, this provides great flexibility in arriving at the exact total value in each leg of the circuit. This portion of the electronics provides us with the very broad ranges and the unique meter scale shown. The divider card provides calibration references for the three ranges of this instrument. By designing the instrument so that the meter physical scale (full scale) is approximately one third of the theoretical full scale, the meter movement is the greatest for the smallest amount of input change, thus providing an instrument with greater accuracy in each scale range.

In soldering the resistors on the divider card, cooling time must be allowed before the total resistance value can be finally accepted for each circuit branch leg. A Keystone circuit board and Keystone 1562-2 connecting terminals are used in the model shown here.

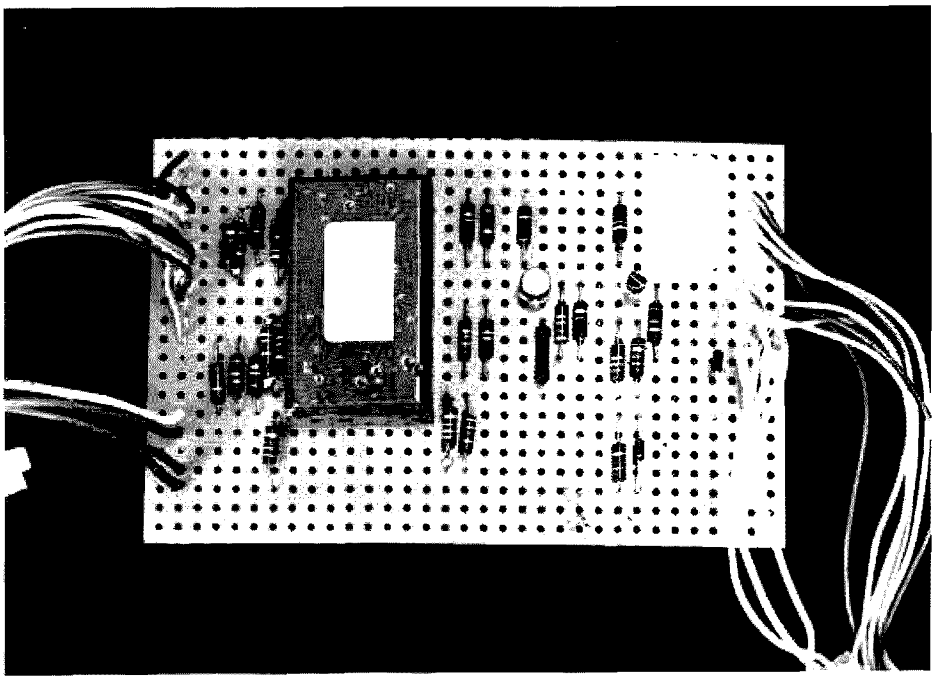

Fig. 7.

The Dc Amplifier Circuit

As with most transistors, I find that great variations exist between the same manufacturer's types. The industrial grades vary more so, and for convenience and economy I

specify "experimental" line transistors, GE FET N-channel, and GE 21 type in the final differential dc amplifier output stage. If the two transistors in the output-differential circuit are sealed closely in a common epoxy case, better calibration and less drift can be had. Using low leakage, wafer-type switches is a must in this device. The switching circuit provided here allows a constant check on the 22.5 volt battery supply. When the 4.5 volt battery falls below operational limits, full scale adjustment cannot be attained. Included in the switching system, I provided a quick "full scale" and "zero" adjustment test position. After running many tests under varying temperature conditions, a slight recalibration check was sometimes necessary; however, due to the "balance" leg arrangement in the divider card, the system is quite self-compensating.

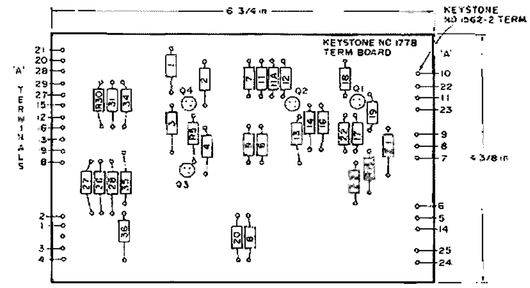

Fig. 8. Electronics card.

The model which I show here includes Waldom "molex" connectors. This does permit removing the divider card from circuit for testing purposes or replacing with spare. Another reason for using the connectors was for changing to divider cards for use with other light probe devices.

Final Calibration of the Instrument

By using the "actual" meter scale illustrated here with the Simpson Model #29 4" meter, the meter circuit is properly functional when the following test procedure is applied:

With the light probe disconnected from P1 (front panel), connect a resistance of exactly 35 megohms to pins 2 and 3 of the front panel connector. Next "ZERO" adjust the meter scale with function switch in the "ZERO ADJ" position.

Now set the function switch to the "MEASURE" position, and the "RANGE" switch to the "LOW" range position. The meter should read full scale on "LOW" range. Now, set the "RANGE" switch to "MEDIUM." The meter should read half scale exactly. Note that there is a true linear scale on the meter face. On this scale, mid-scale would be "5."

If the foregoing procedure indicates meter calibration does not meet the specifications, the problem can be in two different areas. If the low range scale does not meet requirements, the problem lies in the dc amplifier gain and R11 may be adjusted either way to bring the "LOW" scale in. Once the "LOW" scale meets requirements, the "MEDIUM" scale is adjusted in the meter series and shunt resistance circuit for the "MED" range switch position. The divider card circuit remains the same for the "LOW" and "MEDIUM" ranges. The divider card circuit switches when the "RANGE" switch is set in the "HIGH" range position.

Since precise calibration procedures can become rather lengthy in discussion, it is assumed that anyone building this device is already sufficiently advanced in meters and dc amplifiers to proceed with the basic circuit schematic I provide here and understand the accompanying table.

The exact meter scale readings versus input terminal resistance values will provide you with the necessary information to attain the end result in final and correct calibration. A 40 microampere movement (Simpson shown here) allows for more latitude in final calibration, but more damping is had by using the more sensitive movement. I have run tests using a meter movement with a full scale deflection sensitivity of 5,000 Ohms per volt. Lower sensitivity meters don't have the extreme damp-

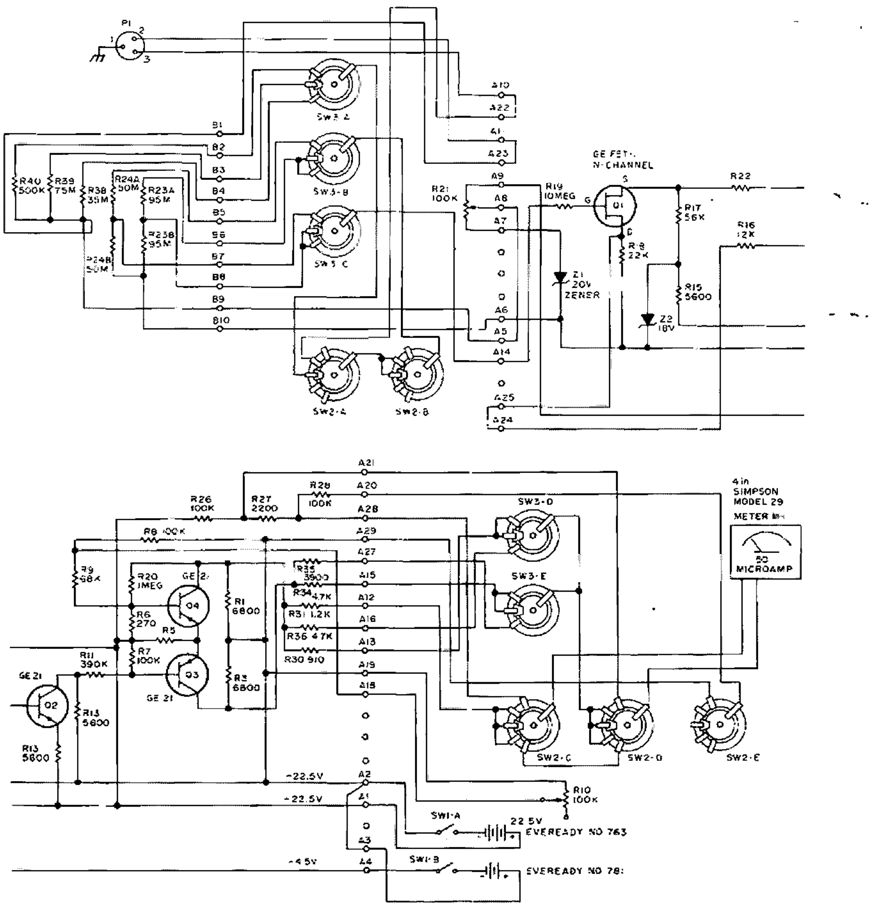

Fig. 9. Circuit schematic.

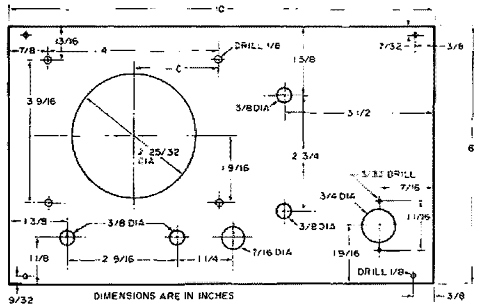

Fig. 10. Front panel.

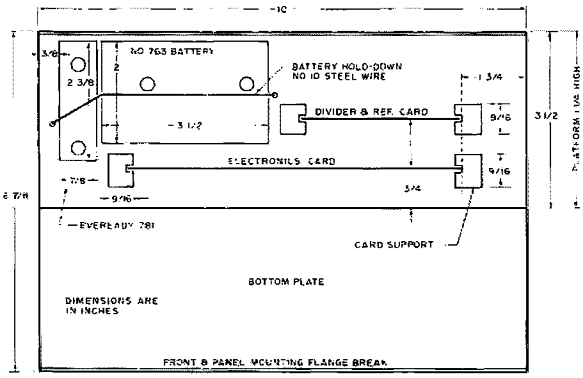

Fig. 11. Top view of chassis.

ing and don't require "tapping" the meter housing to establish the correct meter reading.

Going over the calibration procedure briefly, we have three separate sectional considerations in this device: (1) the meter divider card, which provides the inherent scale characteristics; (2) the dc amplifier, which provides the overall gain to drive the meter movement; and (3) the meter "dropping" and calibration circuit, which also is included in switching between the "LOW" and "MEDIUM" ranges.

An actual "cutout" meter scale which I provide in this article may be used by cutting it out and cementing it to the meter face of the Simpson model 29 meter. A larger illustration is shown, if a different basic meter movement is to be selected. I direct your attention to the 4 different scales on the meter. The three scales, "LOW," "MEDIUM," and "HIGH," are actual linear light level units, where the true meter linear scale is divided into 10 parts. This is universal and can be applied with accuracy in the original meter circuit calibration. It can be used alone if desired, so long as we have a reference point in our actual photographic printing. The light linear scale, however, is much more useful when, for instance, we wish to double or divide our exposure time by half, etc. Here, there is no guessing.

Using the Instrument

The instrument may be used in black and white or color photo printing work. The important feature on my instrument is the small aperture in the meter probe and the large meter movement for a small change in enlarger projected light intensity. In *any* case, a "test print" must be run off to establish a reference point in making subsequent prints. The reference point, of course, applies to one specific paper type and emulsion group. In the paper alone we have at least three variables to consider: paper emulsion sensitivity guide number, contrast curve, and emulsion age.

In using the printing meter, set the probe under a good reference spot right on the easel. Where people are included in the picture, the *best* spot to make all exposure measurements is on the open skin area such as the face. The arms or hands make an excellent place to take all readings. When making very small enlargements, it is very important here that the aperture or opening on the light probe *only* include the skin or flesh area. If other picture parts are included, the readings will cause great exposure error. I designed this instrument to solve this one common problem. I noted more errors on smaller enlargements than larger ones with several "beginners" who have used my instrument. If we had a constant "grey" reference area included on all negatives, it would be a perfect situation; however, many pictures don't even include a person for reference. In this case we may choose to use a sky area as a steady reference point, or a backdrop. In color photography the exposure is much more critical than black and white work. It was in doing color that I ran into problems with other light measuring instruments and finally became involved in the

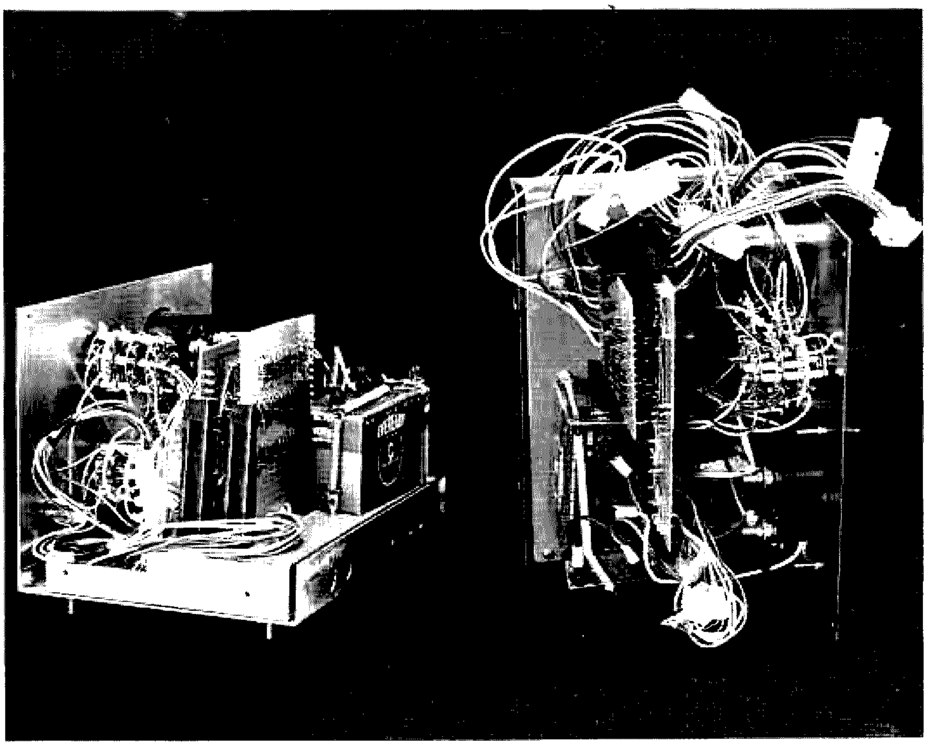

Fig. 12.

Resistors & Potentiometers

R1	6800	Ohms	½ W
R2	47k	Ohms	½ W
R3	6800	Ohms	½ W
R4	47k	Ohms	½ W
R5	4700	Ohms	½ W
R6	270k	Ohms	½ W
R7	100k	Ohms	½ W
R8	100k	Ohms	½ W
R9	68k	Ohms	½ W
R10	100k	Ohms	Linear taper potentiometer (zero adjust)
R11	390k	Ohms	½ W (strapped parallel with approx. 470k on final calibration)
R12	8200	Ohms	½ W
R13	5600	Ohms	½ W
R14	47k	Ohms	½ W
R15	5600	Ohms	½ W
R16	12k	Ohms	½ W
R17	56k	Ohms	½ W
R18	22k	Ohms	½ W
R19	10 meg	Ohms	½ W
R20	1 meg	Ohms	½ W
R21	100k	Ohms	Linear taper potentiometer (full scale adjust)
R22	180k	Ohms	½ W
R23a	95 meg	Ohms	½ W (combination of up to 6 resistors each not to exceed 22 megohms)
R23b	95 meg	Ohms	½ W (same as above note)
R24a	50 meg	Ohms	½ W (see above note)
R24b	50 meg	Ohms	½ W (see above note for R23a)
R25			(no)
R26	100k	Ohms	½ W
R27	2200	Ohms	½ W
R28	100k	Ohms	½ W
R29			(no)
R30	910	Ohms	½ W
R31	1200	Ohms	½ W
R32			(no)
R33			(no)
R34	4700	Ohms	½ W
R35	3900	Ohms	½ W
R36	4700	Ohms	½ W
R37			(no)
R38	35 meg	Ohms	½ W (use up to 6 resistors, each not to exceed 22 meg.)
R39	7.5 meg	Ohms	½ W (use up to 3 resistors)
R40	500k	Ohms	½ W (use up to 3 resistors)

Note: The divider card includes R23a, R23b, R24a, R24b, R38, R39, and R40. (Multiple resistance unit positions are provided as required to arrive at the precise value for each "R".)

Transistors

Q1	G.E. type FET 1
Q2	G.E. type GE 21 (Sylvania type ECG 129)
Q3	G.E. type GE 21 (Sylvania type ECG 129)
Q4	G.E. type GE 21 (Sylvania type ECG 129)

Switches

SW1	DPDT toggle switch
SW2	5 pole (5 position) wafer, use Centralab PA 2028 or equiv.
SW3	5 pole (3 position) wafer, use Centralab PA 2028 or equiv.

Other Items & Hardware

Z1	Zener diode, 20 volts
M1	Meter, Simpson Model 29, 50 microamp, 4½ inch face
P1	Cannon XL-3 M chassis mount connector
P2	Cannon XL-3 F Cord end type connector (probe cable)
LDR1	Probe element, Clairex type 905 HN
B1	Battery, Eveready type 763, 22.5 volts
B2	Battery, Eveready type 781, 4.5 volts
Card	Main electronics board, Keystone, cut to 4 3/8" by 6 3/4"
Card	Divider card, Keystone, cut to 4 3/4" by 3 3/8"
Z2	Zener diode, 18 volts 1 W

Connectors (Optional)

Connector A	Waldom (Molex) package # 1625 – 12 PRT
Connector B	Waldom (Molex) package # 1625 – 12 PRT
Connector C	Waldom (Molex) package # 1625 – 4 PRT
Connector D	Waldom (Molex) package # 1649 – 8 PRT
Connector E	Waldom (Molex) package # 1649 – 8 PRT

design of my printing meter.

I won't attempt to go into detail on printing color, but here, as in black and white, reference points such as flesh tones of persons are *best*. In color, I have found that a solid black area in the picture is a very good reference point once it has been established. Neutral or grey areas are very good. In addition to exposure and time, we have another problem in printing color from complementary color system negatives. Choice of proper light filtration is a very critical operation in color printing. Once we have established proper filter color balance, the last step is to arrive at the exact exposure for a selected exposure time.

Eastman Kodak Ektaprint 3 resin-coated back paper includes on each package the emulsion number, the reference color filtration compensation in yellow and magenta, and the emulsion sensitivity (speed) guide number. As an example: Choose 10 seconds as the exposure time on your timer. Now, keep it there. Select a picture color negative with a facial area in it. Turn the printing meter on and, having calibrated it for "ZERO" and "FULL SCALE," set the instrument to the "MEASURE" position. Place the probe cell aperture on the easel to include *only* the facial area. Adjust the enlarger lens aperture so that the reading on the printing meter "MEDIUM" scale is approximately .17 to .20 printing units. It will be found that this will be a good starting or reference point. It isn't my intention to go into color printing methods here, but with experience my instrument will save you time and money. The development of this printing meter is the result of long-time experience in the color field rather than just the need of a beginner. It is for this reason that I can say that it will serve you very well, whether you are a beginner or a professional.

I have been asked the question, "Why batteries?"

Well, here too from experience, the type of floor, humidity, and power distribution system in your area will cause great variations in external effects upon the instrument if it were common with a commercial power ac supply line. Longitudinal balance variations are avoided by the use of self-contained batteries. My system operates at extremely high input resistance values and, while it is advantageous instrumentwise, it is vulnerable to external electrical influences. Again, the probe and the main instrument in one case are separate units. Thus the instrument has many applications because it is flexible. All the parts shown in this project are simple, and familiar to all radio men. My last figures on the cost of the entire unit using the best meter movement and the connectors with all the trimmings came to approximately $150.00. This included the case and solid steel panel ready to go. ■

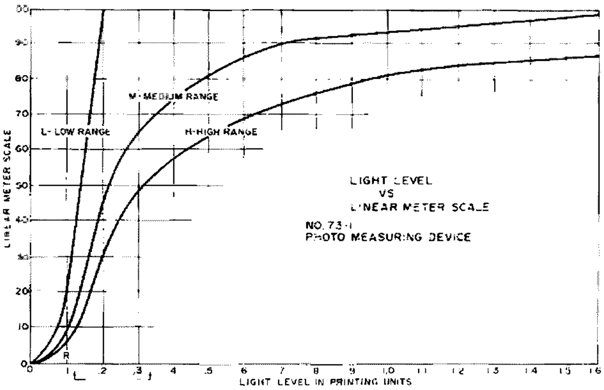

Fig. 13. Light level vs. linear meter scale.

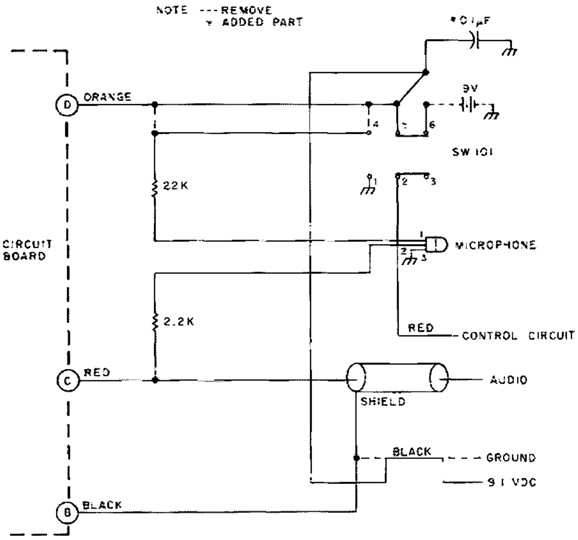

Fig. 1.

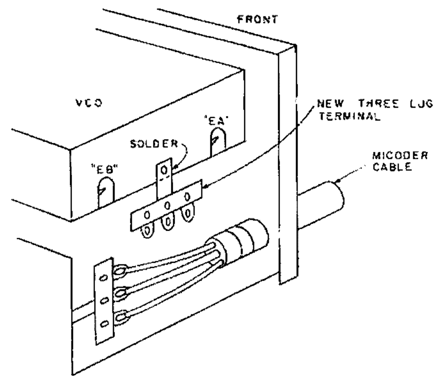

Fig. 2.

John C. Bull K4BJF
1383 S.W. 5th St.
Boca Raton FL 33432

Micoder™ Magic

—*improve it with easy mods*

I have made three changes on my Heathkit™ HW-2036 transceiver and the Micoder™ HD-1982 I use with it. The first two changes go together. They were instigated by my dislike of the nine-volt transistor battery. The third change is strictly an enhancement for ease of operation and to keep background noise from interfering with the tone while using the Micoder.

Following are the steps to use for the change that must be made to the Micoder to eliminate the 9-volt battery and obtain the 9-volt supply from the HW-2036.

1. Remove the 9 V battery wire from switch terminal SW101-6.

2. Remove the negative 9 V battery wire from the two-lug ground terminal.

3. Remove the black cable wire from the two-lug ground terminal. This wire will be used to carry the 9 V from the HW-2036 to the Micoder.

4. Remove the orange wire from switch terminal SW101-4 and reconnect it to switch terminal SW101-5.

5. Connect a 0.1 uF disk capacitor from switch terminal SW101-5 to the two-lug ground switch.

6. Connect the black cable wire to switch terminal SW101-5.

7. To improve oscillator stability, add two 0.01 uF capacitors. One should go from IC102, terminal 5, to ground; the other from IC101, terminal 5, to ground.

Fig. 1 shows the details. This completes the Micoder change. A companion change must also be made in the HW-2036, as follows:

1. Use a three-lug terminal with a center terminal ground support. Straighten the ground mounting strap and secure it to the longer side of the vco assembly so that the terminal lug is under the vco box. Use solder (see page 108 of the HW-2036 assembly instructions). The terminal should be mounted between the EB and EA solder lugs (see Fig. 2).

2. Assemble the capacitor, resistor, and zener diode to the three-lug terminal. Make sure the zener diode polarity is correct.

3. Remove the Micoder black cable wire from lug AT, terminal 2, and connect it to the new three-lug terminal 1.

4. Run a wire from the vco B terminal (11.1 V dc)

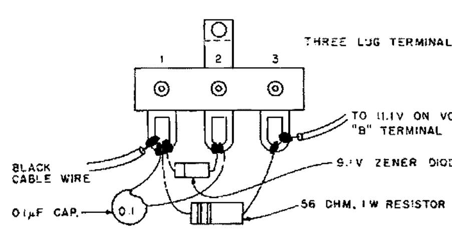

Fig. 3.

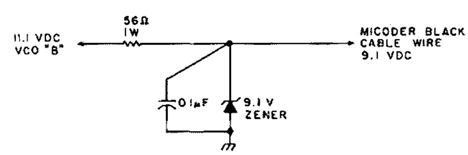

Fig. 4.

and connect it to the new three-lug terminal 3.

That completes the elimination of the 9-volt battery.

The third modification I made activates the push-to-talk when the encoder keyboard buttons are pushed (see Fig. 5). The R-C delay will keep the transmitter on while stepping from keyboard button to button. The PTT switch activator will not have to be squeezed. This will keep the microphone inactive so that background noise will not interfere with the tones. This modification can be accomplished only if the 9-volt battery has been removed. The circuit board will occupy its space. The new board fits between the microphone and the circuit board support posts. Secure the new board to the battery cushions on the lower case.

Diode D1 allows the 100 uF capacitor to charge when Q101 is active and blocks the 100 uF capacitor when it isn't active. When Q1 is active, it turns on the Q1 transistor, activating the control circuit. That turns on the transmitter. Capacitor C1 will discharge via R1, a 1k Ohm resistor, and through the base-to-emitter path of Q1 when Q1 is turned off. This will keep Q1 on for a second or so. Diode D2 will protect the Q1 transistor if the control circuit goes directly to a relay coil. ■

Parts List

2	0.1-uF disk
2	0.01-uF disk
1	56-Ohm, 1-Watt resistor
1	9.1-volt, 1-Watt zener
1	3-terminal connector
1	6-inch hookup wire, insulated
1	circuit board, approximately 29 x 45 mm
1	Q1 transistor NPN 2N2369
2	D1, D2 diode 1N002
1	R1 1000-Ohm, ¼-Watt resistor
1	100-uF 25-V dc capacitor

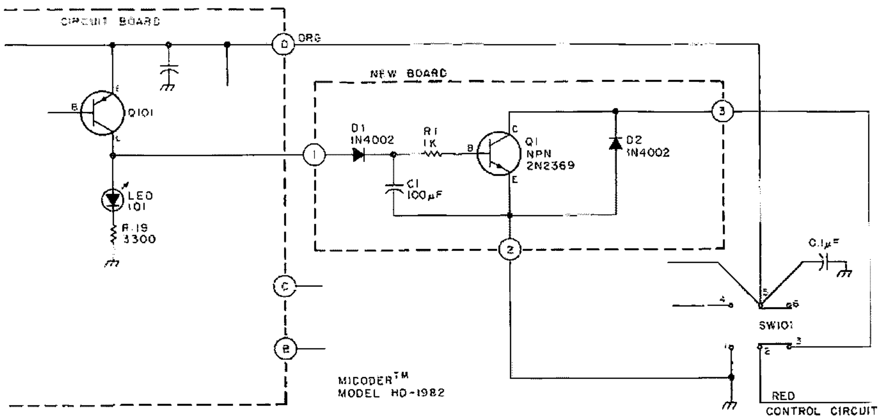

Fig. 5.

Social Events

MORGANTOWN WV
SEP 3

The Monongalia Wireless Association will hold its second annual Mon Ham Gala on Sunday, Sepember 3, 1978, at Westover Park, 300 yards off I-79, near Morgantown, West Virginia. The activities begin at 10:00 am and end at 5:00 pm. Talk-in on 16/76. For complete information, contact John Curtis WB8AHH, 817 Willowdale Road, Morgantown WV 26505.

PENSACOLA FL
SEP 3

The Five Flags Amateur Radio Association will hold its annual Ham-A-Rama on September 3, 1978, at the University of West Florida field house in Pensacola FL. For additional information, write to the FFARA, PO Box 17343, Pensacola FL 32522.

SIERRA VISTA AZ
SEP 9

The Cochise Amateur Radio Association will hold its fourth annual Cochise Amateur Radio Round-Up on September 9, 1978, at the Sierra Vista Community Center, Sierra Vista, Arizona, starting at 9:00 am. Talk-in on .16/.76 and .52/.52. First prize is an Atlas 210X, and there will be many other prizes. Tickets are $3.00. For tickets and more info, write CARA, PO Box 1855, Sierra Vista AZ 85635.

UNIONTOWN PA
SEP 9

The Uniontown Amateur Radio Club will hold its annual Gabfest on Saturday, September 9, 1978, at the Club Grounds on the Old Pittsburgh Road, Uniontown, Pennsylvania.

MELBOURNE FL
SEP 9-10

The thirteenth annual Melbourne, Florida, Hamfest, sponsored by the Platinum Coast Amateur Radio Society, will be held Saturday and Sunday, September 9 and 10, 1978, from 9:00 am to 5:00 pm each day, in the air-conditioned Melbourne Civic Auditorium located on Hibiscus Boulevard. Donation is $3.50 per family. The program includes forums, meetings, swap tables, commercial exhibits, awards, and prizes. Talk-in on .25/.85 and .52. For more info, write PO Box 1004, Melbourne FL 32901.

SOUTH DARTMOUTH MA
SEP 10

The Southeastern Massachusetts Radio Association will hold its annual Flea Market Festival on Sunday, September 10, 1978, from 9:00 am to 5:00 pm at the Stackhouse Street Fairgrounds, South Dartmouth, Massachusetts. Rain date is September 17, 1978. There will be prizes, games, displays, refreshments, and many other activities. Admission is free. Space is $5.00 in advance; $8.00 at gate. Tables are $3.00 in advance; $5.00 at gate. Talk-in on 147.60/147.00 and 146.52. For complete information, contact Bob WA1ZXG or Rocky K1VJZ, S.E.M.A.R.A., PO Box 105, South Dartmouth MA 02748. For reservations: Attention, Armand WB1BUG.

MONTGOMERY AL
SEP 10

The Central Alabama Hamfest will be held Sunday, September 10, 1978, in the new Civic Center, Montgomery AL. There will be food service, prizes, air-conditioned exhibit areas, an indoor and outdoor flea market, and plenty of free parking. Admission and registration are free. For further information, contact Al Erdman W4CNQ, 3025 Pelzer Ave., Montgomery AL 36109, (205)-272-9130, or any amateur in the Montgomery area.

BUTLER PA
SEP 10

The Butler County Hamfest, sponsored by the Butler County ARA, will be held on Sunday, September 10, from 11 am to 4 pm at the Butler County Farm Show Grounds, adjacent to Butler Roe Airport (with a paved runway for fly-ins). Check-ins on 147.90/.30 and .52 simplex. Contact John K3HJH or Cliff WB3CDA for more details.

FINDLAY OH
SEPT 10

The second largest hamfest in Ohio, the 36th annual Findlay hamfest, will be held on September 10, 1978, rain or shine, at Riverside Park from 5 am to 5 pm. Watch for directional signs. There will be free parking, free reserved indoor space (bring your own tables), a massive swap and shop, and lots of prizes. A 2 meter hunt will be held at 1 pm and the main prize drawing at 3 pm. Tickets are $1.50 in advance, $2 at the door. Talk-in and prize check-in on 146.52. For tickets, space reservation, and further information, send an SASE to Clark Foltz W8UN, 122 West Hobart Ave., Findlay, Ohio 45840.

WILKES-BARRE PA
SEP 10

The Broadcasters Amateur Radio Club will hold its first annual hamfest at the Boston Store parkade, 30 South Franklin St., Wilkes-Barre PA on Sunday, September 10, 1978. In addition to ham exhibits, there also will be computer exhibits. Interested dealers and individuals should contact Charles Baltimore, 62 South Franklin St., Wilkes-Barre PA 18703, (717)-823-3101.

PECATONICA IL
SEP 10

The Rockford Hamfest '78 and Illinois State ARRL Convention will be held on Sunday, September 10, indoors at the Winnebago County Fairgrounds, Pecatonica IL. Prizes include a Tempo VHF One transceiver, a Tempo FMH two-meter HT, and a DenTron Jr. Monitor™ Antenna Tuner. Flea market tables are available. Lots of parking and campsites. There will be speakers, forums, displays, and ladies' programs. Tickets are $1.50 in advance and $2.00 at the gate. Talk-in on 01/61 or 52. For details, contact R.A.R.A., PO Box 1744, Rockford IL 61110. Please include a business-size SASE.

ELLETTSVILLE IN
SEP 10

The first annual Hoosier Backyard Hamfest, sponsored by the WR9AFY repeater and Community Broadcasting Corporation, will be held on Sunday, September 10, 1978, at the Phoenix Farm, State Highway 46 at the western city limits of Ellettsville, Indiana, approximately nine miles west of Bloomington, Indiana. There will be limited indoor space for noncommercial demonstrations, and a home brew contest. There will be acres of parking space for trunk sales, with limited overnight parking. Activities begin at 8:00 am and end at 4:00 pm. Admission is $1.00 per person. Children under 12 are free. Talk-in on 147.78/.18 (touchtone™ 7) and 146.04/.64. For further info or advance sales (SASE required), contact CBC, 7391 W. Hwy 46, Ellettsville IN 47429.

CHERRY HILL NJ
SEP 10

The South Jersey Radio Association hamfest will be held on Sunday, September 10, 1978, rain or shine, at the Ellisburg Shopping Center,

Cherry Hill, New Jersey, at the intersection of routes 41 and 70. There will be a flea market, an auction, activities, and many prizes. Family registration is $2.00; tailgating is $3.00. Talk-in on .52. For further information, contact K2KA, Box 2736, Cherry Hill NJ 08002, or phone (609)-429-6032.

CONCORD NH
SEP 15-16

Evans Radio, Inc., Electrical Supply Company of Concord, New Hampshire, celebrates its 45th anniversary with an open house and trade show. The open house will take place on Saturday and Sunday, September 15 and 16, 1978, 9:00 am to 4:30 pm, at the firm's headquarters at Route 3A, Bow Junction, New Hampshire. The trade show will be held at the New Hampshire Highway Hotel and will feature 85 displays of electrical and electronic manufacturers' products. Buses carrying guests will run continually between the headquarters and trade show throughout the two-day celebration.

BUFFALO NY
SEP 16

The seventh annual Hamburg International Hamfest presents HAM-O-RAMA 78. This event will be held on Saturday, September 16, 1978, 9:00 am to 5:00 pm, at the Erie County Fairgrounds, Buffalo NY. Activities include speakers, big prizes, ladies' programs, major manufacturers' displays, and indoor and outdoor flea markets. Recreational vehicle hookups available. Talk-in on 146.52 and 146.31/.91. The fairgrounds are located off New York State I-90 at exit 57. For additional information, contact Bert Jones (716)-873-3984 or Jim Ciurczak (716)-297-0539.

HUDSONVILLE MI
SEP 16

The Grand Rapids Amateur Radio Association will hold its annual swap-n-shop on Saturday, September 16, 1978, at the Hudsonville fairgrounds, west of Grand Rapids on Hwy. #21 approximately ten miles. Talk-In on 14.16/.76 and 146.52. This will be an indoor and outdoor swap and shop. Tables are free; you can sell from the trunk of your car. There will be prizes, with one main door prize. Admission will be $2.50 at the gate. Room for 1,000 cars. Time: 7:00 am till 3:00 pm.

FALLS CHURCH VA
SEPT 16

The 1978 ARRL Technical Symposium will be held on Saturday, September 16, 1978, at the Tyson's Corner Ramada Inn, Falls Church, Virginia, in conjunction with the National Capitol DX Association's DXPO 78. This American Radio Relay League technical symposium is managed by the Amateur Radio Research and Development Corporation (AMRAD) and sponsored by the Northern Virginia Amateur Radio Council (NOVARC).

FALLS CHURCH VA
SEP 16-17

The National Capitol DX Association will sponsor DXPO 78 on Saturday and Sunday, September 16 and 17, 1978, at the Tyson's Corner Ramada Inn, near Interstate 495, Tyson's Corner, Virginia. The two half-day sessions will include DXpedition slide shows, contest tips, antennas, satellite DXing, and other special interest topics. A Saturday night banquet and hospitality session is included. The ARRL Technical Symposium is scheduled for the morning of September 16. Advance registration is recommended. Unless you have previously attended DXPO, write Dick Vincent K3AO, Rt. 1, Box 230, Bryantown, MD 20617 to be included on the mailing list.

KENNER LA
SEP 16-17

The Jefferson Amateur Radio Club, the Crescent City Computer Club, and the New Orleans VHF Club will hold their annual New Orleans Hamfest-Computerfest on Saturday and Sunday, September 16 and 17, 1978, at the Airport Hilton Inn in Kenner, Louisiana. Activities include forums on DX, antennas, hobby computers, and other phases of amateur radio, as well as demonstrations of satellite communication. FCC exams will be given to those with proper advance reservations. A luau with music and entertainment is planned for Saturday night. Talk-in on 146.34/.94. For complete details and reservation information, write New Orleans Hamfest-Computerfest, PO Box 10111, Jefferson LA 70181.

PEORIA IL
SEP 17

The Peoria Area Amateur Radio Club will hold its 21st annual hamfest on September 17, 1978, at the Exposition Gardens on W. Northmoor Road in Peoria, Illinois. Admission to the grounds and swapfest is free; tickets will be sold for a drawing to be held in the Youth Building at 3 pm. Advance tickets are $1.50; tickets at the door will be $2. Camping space will be available Saturday night on the grounds. Space will be available for net meetings and a ladies' flea market; there will be movies and forums of interest to all throughout the day. Commercial exhibitors and manufacturing representatives will give product demonstrations. For the ladies, there will be a free bus trip to the Northwoods shopping mall with more than 100 different shops. An informal get-together will be held at

Continued on page 226

Build the IC Experimenter

—getting started with TTL and CMOS

Mark Leonard
c/o Integral Electronics Corp.
PO Box 286
Commack NY 11725

For both the novice experimenter and the advanced digital circuit designer, the two most essential tools of the trade are a basic power supply and a suitable signal source. Most modern digital circuit families (DTL, TTL, CMOS, and NMOS) either require, or will satisfactorily operate from, a regulated 5 V dc source. A one-Ampere supply will suffice for most medium-size TTL projects and will more than exceed the needs of even the most ambitious CMOS undertaking. The signal source should provide square-wave (true and complement are helpful) and pulse outputs over a reasonable range of frequencies. A bounce-free variable one-shot output is also an absolute must.

The instrument described in this article will meet all of the above requirements; it is immune to accidental shorts which often occur in the course of trying a new circuit and will, therefore, be a useful addition to any laboratory.

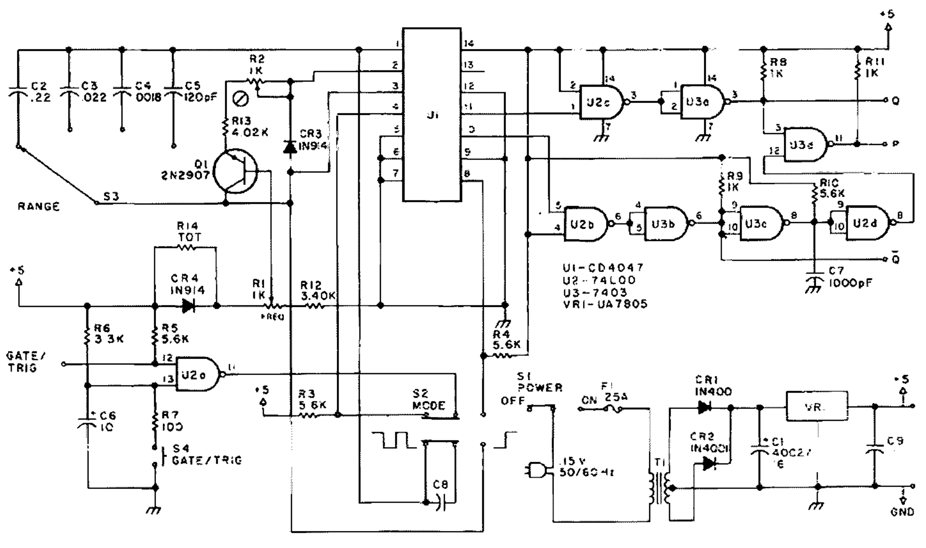

Fig. 1.

Condensed Specifications

Power supply: 5 ± 0.25 V dc at 1 Amp, short-circuitproof; automatic thermal shutdown. *Astable oscillator:* 10 Hz to 100 kHz, providing simultaneous true and complementary square waves and 1 μs pulses, TTL-compatible, short-circuit protected; manual and/or remote gating. *Monostable oscillator:* Simultaneous true and complementary pulses variable from 5 μs to 50 ms. TTL-compatible, short-circuit protected; manual and/or remote triggering.

About the Circuit

Power Supply

The power supply is shown schematically in the lower portion of Fig. 1. It is a basic full-wave rectifier, capacitor input supply, followed by an IC regulator capable of delivering in excess of 1 Ampere at 5 V, while being fully protected against

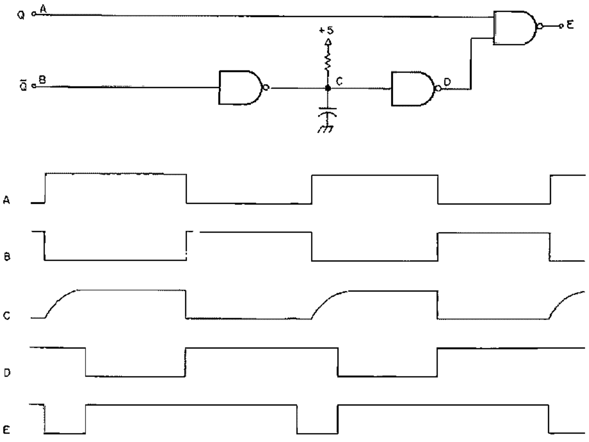

Fig. 2.

Parts List

C1	4000 uF, 16 V, electrolytic capacitor	
C2	0.22 uF	
C3	0.022 uF	matched set, polycarbonate
C4	0.0018 uF	capacitors
C5, C8	120 pF	
C6	10 uF electrolytic capacitor	
C7	1000 pF, disc capacitor	
C9	0.1 uF disc capacitor	
CR1, CR2	1N4001 rectifier diodes	
CR3, CR4	1N914 switching diodes	
F1	0.25 Amp slow-blow fuse	
Q1	2N2907 transistor	
R1	1000-Ohm wirewound potentiometer	
R2	1000-Ohm trimmer potentiometer	
R3, R4, R5, R10	5600-Ohm, ¼-Watt resistor	
R6	3300-Ohm, ¼-Watt resistor	
R7	100-Ohm, ¼-Watt resistor	
R8, R9, R11	1000-Ohm, ¼-Watt resistor	
R12	3400-Ohm 1%, 1/8-Watt, metal film resistor	
R13	4020-Ohm 1%, 1/8-Watt, metal film resistor	
R14	Trim-on-test, ¼-Watt resistor, approximately 1000 Ohms	
S1	SPST slide switch	
S2	DPDT slide switch	
S3	1-pole, 4-position rotary swtich	
S4	NO momentary push-button switch	
T1	Power transformer, 115 V 60 Hz primary; 16 V c-t at 1.5 Amps secondary	
U1	CD 4047AE oscillator	
U2	74L00 low-power quad two-input NAND gate	
U3	7403 open-collector quad two-input NAND gate	
VR1	UA7805 IC voltage regulator	
Misc.	Perforated circuit board, suitable enclosure, line cord, 5-way binding posts, control knobs, fuse clips, hookup wire, solder, hardware.	

sustained shorts and overloads. The power transformer secondary is rated at 16 V c-t at 1.5 Amps; these are the minimum parameters to guarantee proper operation under worst case line and load. The IC regulator (7805) has internal thermal protection and must be heat sinked to at least 15 square inches of 1/16" aluminum sheet metal.

Astable oscillator

The heart of the oscillator circuit is U1, a CD 4047 IC. Its operating mode, i.e., astable or monostable, is controlled by the logic state at terminals 4 and 8. As shown in the schematic, with pin 4 grounded and pin 8 high, the astable mode is established. The oscillator may be inhibited by raising the level on pin 4; this is achieved by grounding either of the two inputs of gate U2A. The frequency of oscillation is determined by the charging time of the frequency range capacitors, C2-C5. When used in accordance with the IC manufacturer's recommendations, the frequency would be continuously varied by varying the resistance between pins 2 and 3. Unfortunately, this yields a frequency calibration proportional to 1/R and a highly nonlinear dial for a linear taper potentiometer. This problem has been overcome in this circuit by replacing the variable resistor with a variable current source, consisting of Q1 and R2 + R13. The base voltage of Q1, adjusted by linear potentiometer R1, linearly varies the current through R2, and hence inversely varies the effective resistance between pins 2 and 3. A perfectly linear frequency calibration is thus achieved. CR4 and R14 act as a temperature-compensating network for the current source.

The CD 4047 has an internal divide-by-two flip-flop and therefore produces highly symmetrical square waves at terminals 10 and 11. Gates U2C and U3A couple and buffer the Q output, and gates U2B and U3B act similarly for the $\overline{Q}$ output of the oscillator. An open-collector gate was chosen as the output device, in spite of its slower rise time, because of its wired-OR capability and, hence, its inherent immunity to accidental shorts to ground.

A 1 μs pulse is generated by combining a delayed $\overline{Q}$ with an undelayed Q. Fig. 2 shows this circuit and its corresponding timing diagram. As a rule of thumb, a 6000-Ohm pull-up resistor and a 1 μF capacitor will yield a 1 ms delay; this relation is quite linear with capacitance. If, in your particular application, a pulse width other than 1 μs is needed, just change C7 to the required value.

Monostable oscillator

The monostable mode is established by grounding U1-8 (through U2A) and by applying a logic "1" to pin 4. The one-shot is triggered by momentarily raising the level at pin 8. This is accomplished by the output of gate U2A, which will go high when either the GATE/TRIG terminal is grounded or push-button switch S4 is depressed. R7 and C6 act as a debouncing circuit. The period of the one-shot is related to the astable frequency, such that $T \approx 1/f$. A correction capacitor C8 shunts all range capacitors (C2-C5) in the monostable mode.

Construction Notes

Hardware assembly is relatively simple and is most easily accomplished using a 0.1" perforated circuit board. IC sockets with wire-wrap or solder tails can be used, and the wiring layout is not particularly critical at the frequencies involved. An aluminum sheet metal bracket may be attached to the circuit board to mount the various binding posts, switches, and controls. The IC regulator should also be directly mounted to this bracket, without insulator.

The frequency range capacitors must have a ±5% tolerance and must be matched to each other to 1 or 2% if good dial tracking between ranges is expected. R14 is selected such that the oscillator with R1 fully CCW is no higher than 0.9 of that range. Calibration potentiometer R2 is adjusted to yield a frequency of 12 at the full CW position of R1. The dial may then be linearly divided between 1 and 11.

For less ambitious readers, the instrument is available either in kit form or fully wired at $64.50 and $79.50, respectively, from Integral Electronics Corporation, PO Box 286, Commack NY 11725. ■

Norman S. Kopeika, Ph.D.
Dept. of Electrical Engineering
Ben-Gurion University of the Negev
Beer Sheva, Israel

Earl Rubin 4Z4TJ
12 Rotem St., Neve-Noy
Beer Sheva, Israel

A New Type of 10 GHz Receiver

—*use it or lose it*

Amateur band utilization has shown a trend towards shorter and shorter wavelengths. In the near future, amateurs will probably be using the microwave region, either because its utilization will become more practical or in order to "save our spectrum" from the CBers.

For most amateurs, a project involving microwaves probably conjures up visions of a silver-plated plumber's nightmare. Still, we occasionally get the urge to try out all those exotic klystrons, magnetrons, etc., bought over the years as *objects d'art* or to speculate on rising copper prices.

In all probability, your junk box now contains at least a few devices capable of performing credibly as microwave detectors. We are referring to the neon glow lamps commonly used as indicator lights.

In this article, we will provide data for experimenting with glow discharge detectors and outline their theory of operation. Basic information on working with microwaves is available from a number of good texts on the market.[1,2]

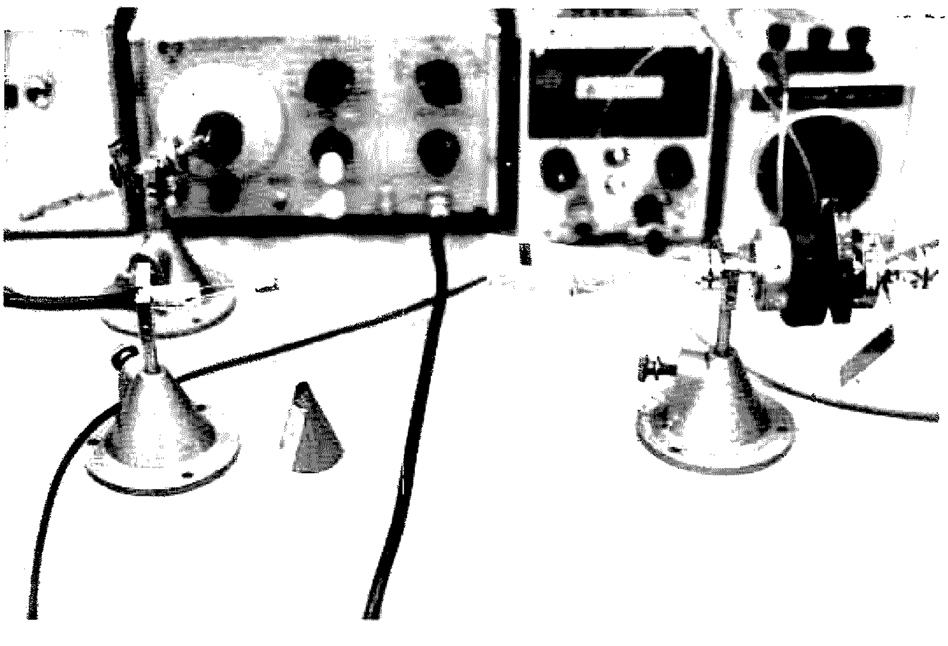

Experimental test setup.

Conventionally, microwaves are detected by point contact crystal diodes appropriately mounted in waveguide fittings. These diodes are expensive and electrically delicate — two parameters which make them unsuitable for amateur experimenters. The advantages of glow lamps as detectors include low cost (less than $1 for most commercial tubes), wide dynamic range (cannot be damaged by accidental large bursts of incident power), electronic ruggedness, broad spectral range (the same tube can operate in both the microwave and millimeter wave regions), and the ability to operate at relatively high temperatures and incident power levels. Glow-lamp detectors are simple to use (no refrigeration or magnetic fields required) and have the ability to play the role of receiving antenna and transducer simultaneously.[3]

Fig. 1 shows the basic setup for experimenting with glow-lamp detectors. The power supply should be well regulated and have a low noise level. The glow tube is positioned in front of the radiation source and connected through a preamplifier to an oscilloscope. The radiation source should be modulated with a function generator or mechanical chopper (fan with metal blades). The bias on the glow tube should be adjusted to a value appropriate to the particular tube you are using. Table 1 lists almost all the common types.[4] Fig. 2 shows typical detector responsivity (R) plotted against discharge current (I).[4] Sensitivity is affected by orientation of the lamp in the microwave field. In addition, the diameters of the lamps are about three times the electrode separation — the sensitive detecting area is, therefore, a small part of the lamp cross section. Radia-

tion can be focused on the plasma between the electrodes with inexpensive conducting cones of sheet metal or Plexiglas™ covered with conducting paint.[5] Such homemade antennas, if focused properly on the sensitive plasma volume, make much more efficient use of the lamp cross-sectional area.

The mode in which a glow detector operates is quite simply explained. The gas is partially broken down with a dc source (as in Fig. 1). The microwave electric field enhances random electron velocity and, thus, the ionization collision rate of electrons with neutral atoms in the glow discharge plasma. The microwave envelope is detected as changes in discharge current, which can then be capacitor coupled to an amplifier.

Glow lamps can also be used as heterodyne detectors. The thermal sensitivity of crystal diodes usually limits the local oscillator power to an average of 10-20 mW or less. The diode is easily damaged by incident power levels greater than 50 mW. Glow discharge detectors can absorb power levels many orders of magnitude higher.

Because of their electronic ruggedness and large dynamic range, glow discharge detectors are capable, in principle, of being used with very large local oscillator powers and, thus, of detecting very low signal levels. Even with the local oscillator powers normally used in mixers designed for diodes, the sensitivity available with common, inexpensive, neon glow lamps is quite comparable, if not superior, to that achievable with diode detectors in heterodyne detection.

Another advantage of diode detectors is that the high sensitivity is achieved despite the high noise level, as a result of very high responsivity. This means that no special low-noise amplifier or similar equipment is required. A low-ripple power supply is, however, desirable. Rise times

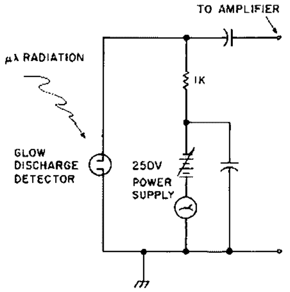

Fig. 1. Glow discharge detector biasing circuit.

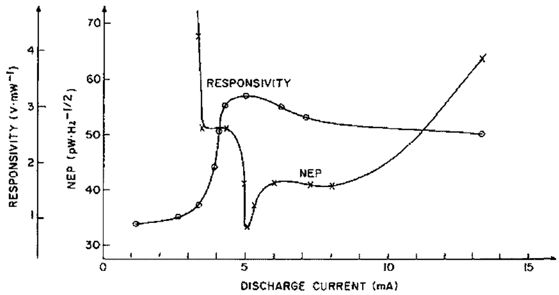

Fig. 2. Responsivity and NEP for X-band radiation as a function of discharge current (I) in the NE-84 glow lamp.

in commercial glow lamps are on the order of a microsecond.[4] This limitation probably stems from reactance due to lamp construction, and not from the physics of the detection mechanism. The microsecond rise time limits the intermediate frequency to less than a megahertz — a limitation which may require PLL stabilization of the local oscillator in a practical receiver.

Table 1 shows the results of a survey of commercially-available glow tubes at X-band (10 GHz).[4] The best detection results for each tube are compared with typical values for diode detectors. The glow tubes are listed by NEP. NEP is defined as minimal detectable signal power (occurs at unity signal-to-noise ratio) per square root of bandwidth. V_n is the noise voltage over a 10 kHz-100 kHz bandwidth; A_r is the detecting area of the glow lamp; R is the glow lamp response per unit microwave power. To maximize A_r, the lamps were oriented with the electrode plane parallel to the microwave electric field and perpendicular to the microwave energy flow. In this case, A_r is the plasma area between the electrodes.

Glow lamps may also be used to detect optical (light) radiation.[6] ■

References

1. S. Ramo, J. R. Whinnery, and T. Van Duzer, *Fields and Waves in Communications Electronics,* New York, J. Wiley and Sons, Inc., 1965.
2. E. L. Jordan and K. G. Balmain, *Electromagnetic Waves and Radiating Systems,* New Delhi, Prentice-Hall of India, Ltd., 1969.
3. N. S. Kopeika and N. H. Farhat, "Video Detection of Millimeter Waves with Glow Discharge Tubes," *IEEE Transactions on Electron Devices,* Vol. ED-22, pp. 534-548, August, 1975.
4. N. S. Kopeika, B. Galore, D. Stempler, and Y. Heimenrath, "Commercial Glow Discharge Tubes as Detectors of X-Band Radiation," *IEEE Transactions on Microwave Theory and Technology,* Vol. MTT-23, pp. 843-846, October, 1975.
5. N. S. Kopeika, "Millimeter-Wave Holography Recording with Glow Discharge Detectors," *Int. J. Electronics,* Vol. 38, pp. 609-613, May, 1975.
6. Kopeika, *et al, Applied Optics,* June, 1976, pp. 1610-1615.

Tube	V_n (uV)	I (mA)	R(V·mW^{-1})	NEP(pW·Hz$^{-1/2}$)	t_r (us)
A059-2	40	2	4.45	1.44	2.1
NE-4	46	3	3.69	2.17	3.0
NE-76	50	3	3.10	2.23	2.0
NE-3	39	3.4	3.81	6.20	2.4
NE-7	57	40.0	3.29	6.59	4.5
AR-9	84	2.5	4.26	7.51	2.5
NE-51-H	21	1.8	0.09	9.82	4.0
5AB-A	57	8.0	4.24	9.86	10.0
5AB-B	54	13.0	2.86	11.0	2.3
5AB	57	12.0	4.11	11.4	2.4
NE-81	73	15.0	3.67	15.9	2.0
A059-9	57	8.0	3.31	24.5	2.1
5AH-D	46	6.5	1.92	28.2	2.4
NE-2U	77	17.0	1.67	29.8	1.4
NE-84	137	4.2	2.32	30.7	1.0
AIB	72	17.0	4.46	34.9	0.8
5AHA	40	4.5	3.07	37.6	1.6
5AH	54	15.0	1.98	39.4	2.0
TRJ250	10	$I_1 = 2$, $I_2 = 0.5$	0.50	39.5	2.5
AIC	70	12	9.00	41.1	2.0
1N238 crystal* diode (Sylvania)	7		211.0	0.318	–
MA-40207 Schottky-barrier diode	–	0.02	5.0	1.1	–

*parameters measured in test setup.

Table 1. Glow discharge tube and diode sensitivities to X-band radiation. I is current, and t_r is rise time.

George J. Tauxe W6FJT
15218 Friends Street
Pacific Palisades CA 90272

Two Meters At the Summit

—a backpacker's delight

In many years of going on backpacking or peak-bagging jaunts in wilderness areas of western mountains, I have often thought of how vulnerable I (if alone) or fellow mountaineers would be if something went drastically wrong. Usually, we would be miles from the nearest roadhead and then additional road miles from a source of help like a ranger station or a sheriff's office.

Taking along a 2 meter handie-talkie for use in emergency communications is a likely solution if there are other stations available for communication. It wouldn't increase the overall weight of a knapsack or a backpack by a great deal. And, further, it might even make things more pleasurable, using it to talk to fellow hams from camps, from rest spots along the trail, or from peaks.

In the spring of 1976, I finally succumbed to the VHF rage and acquired a Wilson 2-Watt handie-talkie (1402SM). After putting it to use in many enjoyable contacts around the Los Angeles area, I decided to try it out on some mountaineering jaunts. It was used on four peak-bagging trips during the summer of 1976, and I thought the consequences would be of some interest.

The HT got its first such initiation on July 14, 1976, when I joined a group of about 25 Sierra Club members for a day hike to the top of Mt. Waterman (8,038 feet elevation) in the nearby Angeles National Forest. I had removed and left at home the rubber ducky antenna and connected a retractable quarter-wave whip in its place.

At the start of the hike, I made my first mistake. I put the HT rig in my knapsack with the antenna protruding upwards a bit. That was unfortunate because, about two-thirds of the way to the peak, it got snagged by a low overhanging tree branch and broken off at its base. On reaching the peak, all I was able to do was hold the antenna in place and listen – and stations were coming in from all over southern California. This painful experience pointed out what I should have done and did thereafter. The whip antenna was disconnected when being transported and placed along with the rubber ducky as a spare in a small plastic bag held by rubber bands to the body of the HT. Also, a small notebook and a pencil with a clip were added for record-keeping purposes. In addition, a spare set of alkaline batteries was carried along, wrapped in another plastic bag.

The second use was on a backpacking trip in the Mt. Whitney region of California's High Sierra mountains. I was the leader for a group of 16 who started at the Whitney Portal roadhead (8,300 ft.) and backpacked to a base camp at Consultation Lake (11,700 ft.). From both locations, I was able to talk with stations in Owens Valley via 52 simplex and via the .34/.94 Bishop repeater (WR6ACG). Excessive rains made things rather miserable, but, finally, July 28 dawned bright and clear, so 15 of us started for the big peak (Mt. Whitney at 14,495 ft., the highest mountain in the "lower 49" states).

As the day progressed, the weather got worse. By the time we got to the top, we

The author operating his HT from an excellent location in the High Sierra.

had experienced heavy rain, hail, lightning, and snow. But all 15 made it to the peak.

On the summit is an old two-room concrete-block hut which was originally used as a Smithsonian observatory. After a hurried lunch inside it, I rigged up the whip on the HT and, just outside the hut, made a few contacts via the Bishop repeater. While talking to a station in Bishop, I suddenly got a sharp shock from the charged clouds nearby and thereafter operated from inside the hut under the protection of a corrugated metal ceiling. The copy was equally good from there.

I next tried to contact some stations using the .34/.94 Fresno machine (WR6ACU). From their conversations, it was obvious they were hearing me, but they elected to continue their own QSO talking about diodes on the repeater's input circuit and such. Then I shifted to .22/.82 and heard a fellow in Santa Maria and talked to him via the San Luis Obispo repeater (WR6AEL) 186 miles away. When we finished, an old friend gave me a call from Baywood Park, and we had a nice chat. About this time, the lightning was getting a little too close, so I buttoned things up and headed back down to camp. The jaunt down was rather precarious on the snow and over parts of the route that had been washed out. But, fortunately, we all made it, and the HT didn't have to be used for any emergency purposes.

A couple of weeks later, my wife and I were camping in the Medicine Bow National Forest of southern Wyoming when I decided to hike to the high point of the Snowy Range, Medicine Bow Peak (12,013 ft.). The jaunt up to the peak on August 20 was rather invigorating and rocky and was rewarded with a wonderful view and an excellent location for 2m QSOs. Via the .22/.82 repeater in Laramie (WR7ADP), I talked to stations in Cheyenne and in Laramie. Via the .34/.94 repeater in Laramie (WR7ADK), I contacted additional stations in Laramie. Then also on .34/.94, I talked to a station in the Big Horn Mountains through the Casper machine (WR7ADR). I tried to break the .34/.94 repeater in Denver, but it was apparently too far away.

My fourth and last peak-bagging trip was on September 1 in the northern part of the High Sierra while camping with some of my family. I started at the Tioga Pass Ranger Station (9,946 ft.) and hiked and boulder-hopped to the top of Mt. Dana (13,053 ft.). Here again there was a terrific view and a super location for 2m operation. Being very high on the main crest of the High Sierra, I was able to break three repeaters simultaneously on .34/.94: the WR6ACG machine in Bishop, the WR6ACU machine in Fresno, and the WR6ADF machine at Oakland in the San Francisco Bay area. It was sometimes difficult to tell which repeater was being used for the QSOs I had with stations in Modesto, Davis, Alameda, Novato, and Owens Valley. Some of these contacts were also duplicated on .52 simplex, notably with a fellow in Novato, at a distance of 218 miles. In addition, I tried .22/.82 and, through the Oakland repeater (WR6ABM), contacted another station in Novato and one in Concord. One of the .34/.94 QSOs was a pleasant surprise, with a fellow in Bishop I had previously contacted from Mt. Whitney.

I thoroughly enjoyed these experiences with my reliable HT and recommend that others give it a try. Fortunately, there were no emergencies to report, but it does give one a feeling of security. ■

Social Events

from page 219

the Heritage House Smorgasbord, 8209 N. Mt. Hawley Rd., at 7 pm on Saturday, September 16, for $4.25 per person. 2 meter talk-in on 146.7-6; just call W9UVI. Local repeaters are .16-.76, .25-.85, and .37-.97. For information, write to John Sutton WD9BJJ, 608 W. Teton Drive, Peoria IL 61614, phone (309)-691-7073.

HARRISBURG PA
SEP 17

The Central Pennsylvania Repeater Association will hold the fifth annual Electronic Swap Fest and Hamfest on Sunday, September 17, 1978, beginning at 8:00 am, at the Park-n-Shop Parking Garage (Center City), 200 Block Walnut Street, Harrisburg, Pennsylvania. This is a rain or shine event with indoor parking for 1100 cars. Registration is $3.00 and wives and children are free. Food and refreshments are available. Talk-in on 146.16/.76, 146.34/.94, and .52 simplex. For more information, contact WB3HXH (717)-944-7017.

VENICE OH
SEP 17

The Cincinnati Hamfest will be held on Sunday, September 17, 1978, at Stricker's Grove, State Route 128, Venice (Ross), Ohio. There will be exhibits, prizes, a flea market, a hidden transmitter hunt, and a sensational air show. Tickets are $7.50 in advance; $8.00 at the gate. For complete information, contact the Greater Cincinnati Amateur Radio Association, c/o John P. Haungs WA8STX, Treasurer, 10615 Thornview Drive, Evendale OH 45241.

NORFOLK VA
SEP 23-24

Tidewater Radio Conventions, Inc., is pleased to announce its third annual hamfest, flea market, and computerfest to be held on September 23 and 24 at the Norfolk Cultural and Convention Center (SCOPE). This is an approved ARRL function. Large indoor, air-conditioned facilities for flea market and exhibitors. Tickets are $2.50 by September 16 and $3.50 at the door. Tailgaters' tickets are $5.00 per day and $7.50 for two days, in advance, and $6.00 at the gate. For details, contact Norman V. Cohen WB4LJM, Box 9371, Norfolk VA 23505.

ERIE PA
SEP 24

The third annual HamJam, sponsored by the Radio Association of Erie, will be held on Sunday, September 24, 1978, from 9:00 am to 4:00 pm, at Waldameer Park in Erie, Pennsylvania. Admission is $1.50 in advance; $2.00 at the gate. There will be refreshments and prizes. Talk-in on 34/94, 22/82, and 52. For complete info, write HamJam '78, Radio Association of Erie, Box 844, Erie PA 16512.

ADRIAN MI
SEP 24

The Adrian Hamfest will be held on Sunday, Spetember 24, 1978, at the Lenawee County Fairgrounds, Adrian, Michigan. There will be a computerized ham radio station and a communications satellite seminar presented by Dr. Ralph E. Taggart WB8DQT. Prizes include an Icom IC-22S, a Bird 43 wattmeter, and a Heathkit HW-8. Tickets are $1.50 in advance; $2.00 at the gate. Tables are $4.00 for full table; $2.00 for half table. Trunk sales are $1.00 per space. Talk-in on 146.31/.91 or 146.52 (W8TQE). For complete information, contact the Adrian Amateur Radio Club, Inc., PO Box 26, Adrian MI 49221, or phone (517)-265-8016.

VALPARAISO IN
SEP 24

The Valpo Tech Alumni Association will hold its annual hamfest on Sunday, September 24, 1978, on the campus of Valparaiso Technical Institute. Admission to the event is $2.00 for both visitors and exhibitors. For further information and directions, write Hamfest, Valpo Tech Alumni Association, Box 490, Valparaiso IN 46383, or phone (219)-462-2191.

NEW BERLIN IL
SEP 24

The Sangamon Valley Radio Club of Springfield, Illinois will hold its third annual hamfest on Sunday, September 24, 1978, at the Sangamon County Fairgrounds, New Berlin, Illinois. There will be an indoor exposition building with no charge to set up. Overnight camping available for Saturday night. Food and refreshments will be available on the grounds. WA4WME, of the recent Clipperton Atoll DXpedition, will give his slide and movie presentation. There will be lots of other activities, including those for ladies and children. For further information, contact Richard I. Osland K9FNB, Publicity Chairman, 1025 South 6th Street, Springfield IL 62703.

GAINESVILLE GA
SEP 24

Lanierland Amateur Radio Club will hold its fifth annual HAMNIC at the Lanier Islands Dogwood Pavilion on September 24, 1978. There are two large covered pavilions and a large parking area for the swap shop and exhibits. First prize is a KDK FM2015R along with many other prizes. Food available. No entry fee for HAMNIC, but Lanier Islands charges $2.00 entry fee per car. Picnic, hiking and swimming for the kids. Talk-in on .07/.67. For further information, write Bob Cochran W4DNX, 607 East Lake Drive, Gainesville GA 30501.

FLINT MI
SEP 24

The Greater Genesee Valley Amateur Radio Club, in conjunction with the Bay Area Amateur Radio Club, Genesee County Radio Club, Lapeer County Amateur Radio and Repeater Club, Saginaw Valley Amateur Radio Association, and the Shiawassee Amateur Radio Association, presents a Five County Swap-n-Shop at 1420 W. 12th St. On I-69, south, take Hammerberg Rd. off and turn left at 12th St. Tickets are $2.00 per person and $3.00 per family. Tables available. Talk-in on 147.27, 146.91, and 146.52. For more information, write to Five County Swap-n-Shop, Box 7671, Flint MI 48507.

CORPUS CHRISTI TX
SEP 30

The Corpus Christi ARC and the South Texas Amateur Repeater Club will hold a South Texas Swapfest on Saturday, September 30, 1978, 9:00 am to 5:00 pm, at the Texas National Guard Armory, 1430 Horne Rd., Corpus Christi, Texas. Admission and tables are free. There will be dealer displays, contests, and door prizes. Talk-in on .34/.94 and .28/.88. For additional information, contact J. E. Rehler W5KNZ, 526 Pasadena, Corpus Christi TX 78411.

ELMIRA NY
SEP 30

The third annual Elmira Amateur Radio Association Hamfest will be held at the Chemung County Fairgrounds on September 30. Gates open at 9:00 am. A grand prize and several door prizes will be offered. No extra charge for flea market space. Indoor space available on a first come, first served basis. Several dealers will also be on hand with their displays. Talk-in on 146.52/52, 146.10/70, and 147.96/36. For advance ticket sales and further info, contact John Breese WA2FJM, 340 West Ave., Horseheads NY 14845.

WILLOW GROVE PA
SEP 30

The second annual Mid-Atlantic States VHF Conference will be held on Saturday, September 30, 1978, at the Treadway Inn on Easton Rd. (Route 611, Exit 27 of the PA turnpike), Willow Grove, Pennsylvania, on the day before Hamarama 78. The conference will be an all-day VHF program moderated by prominent VHFers. For advance registration, contact Ron Whitsel WA3AXV, Chairman, PO Box 353, Southampton PA, 18966; (215)-355-5730. Indicate motel registration forms required.

GRAYSLAKE IL
SEP 30-OCT 1

Radio Expo '78 will be held on Saturday and Sunday, September 30 and October 1, 1978, at the Lake County Fairgrounds, Grayslake, Illinois. The fairgrounds are located at Routes 45 and 120. The convention center is at the Mundelein, Illinois, Holiday Inn. There will be dozens of manufacturers' and distributors' exhibits, indoor and outdoor flea market areas, seminars, and free camping. The flea market will be open Friday for setup. Tickets are $2.00 in advance; $3.00 at the gate. Talk-in on .16/.76. For details, write Radio Expo '78, PO Box 305, Maywood IL 60153.

LOUISVILLE KY
SEP 30-OCT 1

The eighth annual Greater Louisville ARRL hamfest will be held on Saturday, Sept. 30, and Sunday, Oct. 1, at the West Hall of the Kentucky Fair and Exposition Center. There will be a gigantic indoor air-conditioned exhibitor's area and flea market with meetings and forums and ladies' programs both days. Admission is $3.00 for adults with children 12 years and under free. Flea market vendors pay admission plus $3.00 per space for one day only, or $5.00 per space will cover both days. Camping is available on the grounds, free with no hookup. For more information contact Denny Schnurr K4GOU, 2415 Concord Drive, Louisville KY 40217, phone (502)-634-0619.

WEST GHENT NY
OCT 8

The Northeastern States 160 Meter Amateur Radio Association will hold its annual banquet on Sunday, October 8, 1978, at Kozel's Restaurant, West Ghent, New York. A roast beef dinner will be served at 6:00 pm. Cost is $8.00 per person. From 1:00 pm to 4:00 pm there will be a flea market. Cocktail hour is from 4:00 pm till dinner time.

propagation

by
J. H. Nelson

EASTERN UNITED STATES TO:

GMT:	00	02	04	06	08	10	12	14	16	18	20	22
ALASKA	14	14	7	7	7	7	7	7	7	7A	14	14
ARGENTINA	14	14	7A	7	7	7	14	14	14A	21	21A	21A
AUSTRALIA	14A	14	7B	7B	7B	7	7	7	7B	7B	14A	21
CANAL ZONE	14	7	7	7	7	7	14	14	14A	21	21	21
ENGLAND	7	7	7	7	7	7B	14	14	21	21	14	7B
HAWAII	14A	14	7B	7	7	7	7	7B	14	14	14	14A
INDIA	7	7B	7B	7B	7B	7B	14	14	14	7A	7	7
JAPAN	14	7A	7B	7B	7B	7	7	7	7	7	7A	14
MEXICO	14	7A	7	7	7	3A	7	14	14	14	14A	14A
PHILIPPINES	14	7A	7B	7B	7B	7B	7	7	7	7	7	14
PUERTO RICO	14	7	7	7	7	7	7A	14	14	14	14	14
SOUTH AFRICA	7A	7	7	7	7B	14	14	14A	21	21A	21A	14
U. S. S. R.	7	7	7	7	7	7B	14	14A	14A	14	7B	7
WEST COAST	14A	14	7	7	7	7	7	14	14	14A	14A	21

CENTRAL UNITED STATES TO:

GMT:	00	02	04	06	08	10	12	14	16	18	20	22
ALASKA	14	14	7A	7	7	7	7	7	7A	14	14	14
ARGENTINA	14	14	14	7	7	7	14	14	14A	14A	21A	21A
AUSTRALIA	21	14A	14B	7B	7B	7B	7	7	7B	7B	14A	21
CANAL ZONE	21	14	7	7	7	7	7A	14	14A	21	21	21
ENGLAND	7	7	7	7	7	7B	7B	14	14A	14A	14	7B
HAWAII	14A	14	7A	7	7	7	7	7B	14	14A	14A	21
INDIA	7	7B	7B	7B	7B	7B	7B	14	14	14	7	7
JAPAN	14	14	7A	7B	7B	7	7	7	7	7	7A	14
MEXICO	14	7	7	7	7	3A	7	14	14	14	14A	14A
PHILIPPINES	14	14	7B	7B	7B	7B	7	7	7	7	7	14
PUERTO RICO	14	7A	7	7	7	7	7A	14	14	14A	14A	14A
SOUTH AFRICA	7A	7	7	7	7B	7B	14	14	14	14A	14A	14
U. S. S. R.	7	7	7	7	7	7	7B	14	14	14	7B	7

WESTERN UNITED STATES TO:

GMT:	00	02	04	06	08	10	12	14	16	18	20	22
ALASKA	14	14	7A	7	7	3A	3A	7	7	14	14	14
ARGENTINA	14A	14	7A	7	7	7	7B	14	21	21	21A	21A
AUSTRALIA	21A	21A	21	14	7	7	7	7	7	7B	14	21
CANAL ZONE	21	14	7	7	7	7	7	14	14A	21	21	21
ENGLAND	7B	7	7	7	7	7B	7B	14	14	14A	14	7B
HAWAII	21A	21	14A	14	7	7	7	7	14	14	14	21
INDIA	14	14	14	7B	7B	7B	7B	7B	7	7	7	7
JAPAN	14	14A	14	7B	7B	7	7	7	7	7	14	14
MEXICO	14	14	7	7	7	7	7	14	14	14	14A	14A
PHILIPPINES	14A	14A	14	7B	7B	7B	7	7	7	7	7A	14
PUERTO RICO	14A	7A	7	7	7	7	7	14	14	14	14A	14A
SOUTH AFRICA	7A	7	7	7	7B	7B	7B	14	14	14	14A	14A
U. S. S. R.	7	7	7	7	7	7	7	7	14	14	7A	7
EAST COAST	14A	14	7	7	7	7	7	14	14	14A	14A	21

A = Next higher frequency may also be useful
B = Difficult circuit this period
F = Fair
G = Good
P = Poor
SF = Chance of solar flares

september

sun	mon	tue	wed	thu	fri	sat
					1 G	2 G
3 G	4 F	5 G	6 G	7 G	8 P/SF	9 P/SF
10 P/SF	11 G/SF	12 G/SF	13 F/SF	14 P/SF	15 P	16 G
17 G	18 G	19 F	20 F	21 F	22 P	23 F
24 F	25 G	26 G	27 G	28 G	29 G	30 F

October 1978 $2.00

73 Magazine for Radio Amateurs

W2NSD/1 NEVER SAY DIE

editorial by Wayne Green

A WOMAN ARRL DIRECTOR?

Mary Lewis W7QGP is running against Robert Thurston W7PGY for the Northwest Division directorship of the League. Thurston is reported to have said that a woman can *never* be a director.

While I get along fine with some of the ARRL directors, I've found Thurston to be about as arrogant as they come . . . much taken with his own tremendous importance. His reaction when Mary Lewis ran for SCM against his personally handpicked candidate, and won, was one of outrage. Then Mary was instrumental in the QCWA annual convention being tied in with the ARRL national in Seattle last year and that tore it. Mary was fired as SCM on a trumped-up charge that she had not paid a $25 bill for ARRL labels to send a mailing to the members in her area. I've looked into the growing file on this debacle, and I can find no sign whatever that the ARRL ever even billed Mary for the labels . . . which they should not have done anyway.

I've met and talked with Mary several times, and I've found her to be very well informed on both local and national matters. Even more important, I've found her interested in doing what she can for amateur radio rather than in ways to feed her ego. I have never met anyone who knows her who doesn't think she is top-notch.

The ARRL is desperately in need of cleaning out the old guard who come to Newington and rubber-stamp whatever headquarters wants. If Thurston is re-elected, I'll be ashamed of the Northwest.

REMOTE RECORDING

For several years I hauled around fairly good-sized tape recorders to keep a record of my talks, to tape other talks of interest, to tape interesting sounds, etc. I got started in this line of mischief way back when the Webcor wire recorders came on the market, a bit over 30 years ago.

As recorders have gotten smaller, I've kept up with them, and these days I carry around one of those very small cassette recorders, a Sony TC-55. This operates from 6 V dc with a couple of built-in nicads or an external 120 V ac operated power supply.

Eventually I got tired of lugging around 50 to 100 feet of line cord for this tiny recorder. Any less often made it impossible to reach a wall socket in larger auditoriums. The nicads lasted only a few minutes, impossibly undependable for any talk I really wanted to record . . . or music. I got the idea to buy a 6 V lantern battery and lug that instead of the line cord and power supply. I even have a place for the recorder and battery in my attache case.

With the lantern battery, I can record for days before exhausting it and there are no line cords to string or for people to trip over. Eventually even a lantern battery tires and a valuable recording can be lost. Two lantern batteries? One is heavy enough, thanks. Radio Shack came up with the ideal answer . . . a rechargeable lantern battery.

Now, when I get back from a trip, I put the battery on to charge for a day and then pack it back in the attache case. If it sits there for too long before my next trip to a hamfest or computerfest, I give it an hour of juice before leaving. Since this system has been inaugurated, I've never had a failure.

The battery and 500 mA recharger are available from Radio Shack for about $21.

Once you get used to having a cassette recorder with you, all sorts of uses turn up. I record magazine publishing workshops, bluegrass music in a Paris subway, ARRL officials talking, interviews with interesting businessmen, important agreements over the telephone, notes at exhibitions on new products, etc.

ASPEN HAM INDUSTRY CONFERENCE

The fourth annual Ham Industry Conference will be held (again) at Aspen, Colorado. This is a series of workshops for the examination of the ham market, how to sell, how to organize and finance a ham store, how to write advertising, etc. The conference is aimed at being of value to both manufacturers and dealers.

The conference will be held from January 6th (arrival that afternoon) until January 13th (leaving day). If you are interested in joining the group for some interesting workshops, some skiing, and some of the best food in the world, please drop a line to Aspen Workshop, c/o *73 Magazine*, Peterborough NH 03458. Please make your arrangements for accommodations and lift tickets, etc., with Joanie Eidsmo, Aspen Ski Tours, Box 320, Aspen CO 81611, (303)-925-9500. We will, as usual, be staying at the Continental Inn, about one block from beautiful downtown

73 Magazine is published monthly by 73, Inc., Peterborough NH 03458. Subscription rates in the U.S. and Canada are $18 for one year, and $36 for three years. Outside the U.S. and Canada, write for rates. Second class postage paid at Peterborough NH 03458 and at additional mailing offices. Publication No. 700420. Phone: 603-924-3873. Entire contents copyright 1978 by 73, Inc. INCLUDE OLD ADDRESS AND ZIP CODE WITH ADDRESS CHANGE NOTIFICATION. Microfilm edition—University Microfilm, Ann Arbor MI 48106.

Aspen. Don't forget your HT, if you come . . . with 146.52 set up.

UNSCREWING THE CONSUMER

A recent letter from Barry Goldwater suggested that we stop sitting around waiting for the government to adopt a law to force manufacturers of consumer electronic equipment to build in radio frequency filters which would permit them to work in the vicinity of radio transmitters. Since Barry has been trying to get this legislation through for quite a few years, perhaps he is on to something.

The logical extension of his idea is for radio amateurs to put enough pressure on industry to force changes in designs. Since most ham clubs already have TVI committees to investigate interference from ham rigs, we have the nucleus to get something started.

Suppose TVI committees were to send in the name and model of any consumer electronic equipment which was inadequately designed and as a result was overly susceptible to interference from nearby transmitters. If this list was then published in *73* so all amateurs would have it at hand for helping advise neighbors, friends, people at work, etc., as to which makes of equipment to avoid, the message might get through. With 300,000 hams putting out the word in every corner of the country, even the most recalcitrant of manufacturers might decide it was time to spend an extra fifty cents and include an input filter on their television set, hi-fi, etc.

If the idea is to be of any real value, it will take the cooperation of every ham and every club. I pledge the cooperation of *73 Magazine*. If your TVI committees will send in reports on consumer products, I'll contact the manufacturer. If I get no prompt assurance of change, they'll go on the list. I then want to know for sure that you will advise everyone you meet to hold up on buying this product until needed changes are made . . . and that you'll also haunt any local dealers and drive them crazy. Letters to the newspapers, television consumer shows, news shows, won't hurt either. Yes, I think hams can do what the government was afraid to do. The EIA may have millions of dollars to stop such legislation going through, but they can't stop *73 Magazine* and the whole of amateur radio.

Are you game? Let's start getting some TVI committee reports and see what we can do. Also, if you can get any of the other ham magazines to cooperate, all the better. This is no time for any one-man show.

QST MYSTERY COVER

One of the nicer *QST* covers in many months was the August cover promoting the San Diego ARRL Convention. Oddly, no credit was given for the cover drawing. Curious?

Below is the cover before *QST* blocked out the QCWA part of the drawing. The artist involved is Paul Hower WA6GDC, a 50-year ham, longtime member of QCWA, and International Vice Commander of the Happy Flyers, a club made up of ham-pilots.

The one major difference is the removal of the reference to the QCWA convention. Unhappily, it appears that as the Quarter Century Wireless Association has grown in members (and thus strength), the ARRL has taken a more and more belligerent attitude toward it. The ARRL has a long history of trying to destroy *any* organization in amateur radio which they don't control. I'm reminded of a talk I had with the sales manager of Data General, one of the larger minicomputer firms. I was interested in connecting a Teletype™ machine to their system, if I bought it. Anything I wanted to use with the Data General system which I didn't buy from them was termed "hostile" equipment.

How much have you seen in *QST* about the QCWA? This is the second largest organization in amateur radio. It is made up of amateurs who have been licensed 25 years or more. One would expect the ARRL to be proud of the QCWA instead of trying to bury it.

In 1977, a big battle developed between the ARRL and their convention committee in Seattle because Seattle insisted on hosting the QCWA National Convention at the same time. Ask any ham in Seattle about the raw deal they gave the committee. I was there and saw it with my own eyes. The ARRL even forbid its HQ staff from attending the QCWA banquet! Surely I'm exaggerating. I wish I were.

Oddly enough, I've seen no resulting anti-ARRL reaction from the leaders of the QCWA . . . and I have known them all for many years. Their patience with the Newington paranoia is heroic. Fortunately for the League, the QCWA has virtually no national organization, existing almost entirely through its many local chapters. If QCWA did have any significant national organization, we might find ourselves in the middle of a serious war between the bureaucrats in Newington and the old-timers who made this hobby what it is today. We don't need that.

There may be some ARRL supporters who wish to challenge what I've said. I'm not out to tear down the League, only to get it to work in the best in-

Continued on page 171

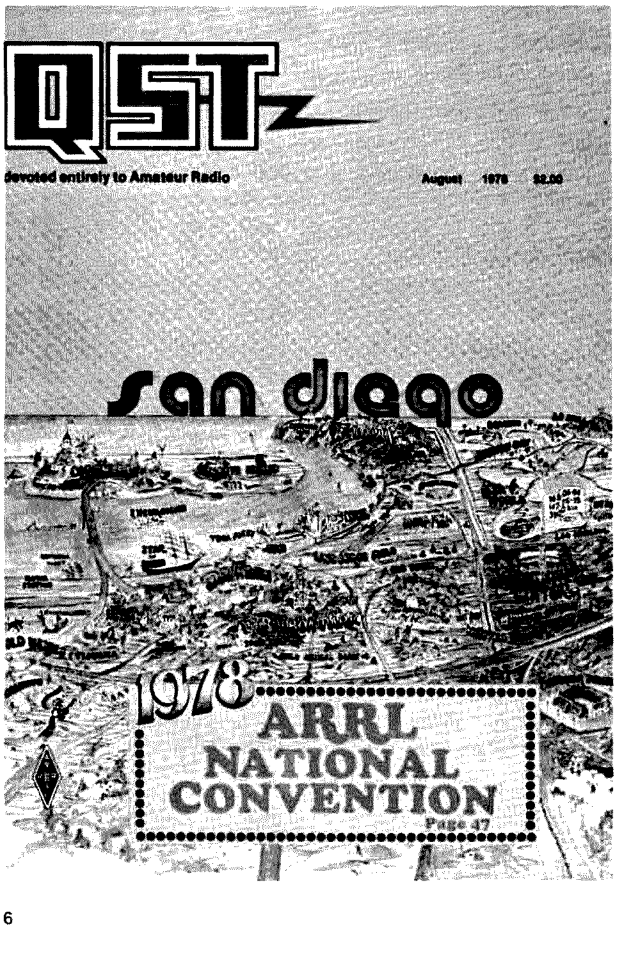

Editor:
Robert Baker WB2GFE
15 Windsor Dr.
Atco NJ 08004

CONTESTS

VK/ZL OCEANIA CONTEST

Phone & RTTY
Starts: 1000 GMT
Saturday, October 7
Ends: 1000 GMT
Sunday, October 8
CW
Starts: 1000 GMT
Saturday, October 14
Ends: 1000 GMT
Sunday, October 15

Sponsored by the New Zealand Association of Radio Transmitters, the contest is open to all amateurs and SWLs.

EXCHANGE:

RS(T) plus serial number starting at 001.

SCORING:

Oceania stations score 2 points per QSO with VK/ZL, 1 point for QSO with Oceania other than VK/ZL. All other stations score 2 points per VK/ZL QSO, 1 point per Oceania (other than VK/ZL) QSO. Final score is derived by multiplying total QSO points by the sum of VK/ZL call areas worked on all bands. The same VK/ZL call area worked on different bands counts as a separate multiplier.

ENTRIES AND AWARDS:

Logs must show, in this order: date/time in GMT, callsign of station contacted, band, serial number sent/received. Underline each new VK/ZL call area contacted and make separate logs for each band. Summary sheet must show callsign, name, address (please use block letters), details of equipment used, and for each band, QSO points for that band and total of VK/ZL call areas worked on that band. Allband score will be total QSO points mutiplied by sum of VK/ZL call areas on all bands while single band scores will be that band's QSO points multiplied by VK/ZL call areas worked on that band only. Sign a declaration that all rules and regulations have been observed. Attractive colored certificates will be awarded top scorers. Send entries to: NZART Contest Manager, ZL2GX, 152 Lytton Road Gisborne, New Zealand, before Jan. 31.

SWL Section:

A VK or ZL station must be heard in a QSO and the following details noted in the log—date, time in GMT, call of the VK or ZL station heard, callsign of the station he is working, RS(T) of the VK/ZL station heard, serial number sent by the VK/ZL station, band, and points. Scoring is on the same basis as for the transmitting section and the summary sheet should be similarly set out. Phone and CW are combined for SWLs.

Special Rules for RTTY:

Classes include single-operator, multi-operator, and SWL. Logs of multi-operator stations must be signed by all operators together with their callsigns. SWLs must show both number sent and the number received by the station logged. Incomplete entries are ineligible. Exchange consists of RST, zone number, and time in GMT. Scoring as per CARTG zone chart, multiplied by the number of countries worked, multiplied by the number of continents worked (6 max.). World stations add 100 points for each VK and ZL station worked after the above calculations. A station may be worked only once on each band, but may be worked on another band for further multipliers. Eligible country multipliers as per ARRL countries list plus each call district in VK/ZL, J, and W/K. Contact with one's own country does not count as a multiplier. Logs must show in this order: date and time in GMT, call of station worked, serial sent and received, points claimed. Use a separate log for each band. Summary sheet to show callsign, name and address in block letters, section in which competing, details of station, points claimed for each band, number of VK/ZL stations worked, total points, and declaration that relevant rules have been observed. Attractive colored certificates to be awarded to the first to third places on a world basis and for each country multiplier shown above. Logs must be received by the RTTY committee by January 1 at the following address: S.E. Molen VK2SG, 13 Pendle Way, Pendle Hill, Sydney, NSW Australia 2145.

CALENDAR

*Sept 30-Oct 1	Rocky Mountain Division QSO Party
Oct 7-8	California QSO Party
	VK/ZL Oceania DX Contest—Phone & RTTY
Oct 14-15	VK/ZL Oceania DX Contest—CW
	Nine-Land QSO Party
	RSGB 21/28 MHz—Phone
	Manitoba QSO Party
	ARRL CD Party—CW
Oct 21-22	Jamboree-On-The-Air
	CARTG Worldwide RTTY DX
	"Dominion" Sweepstakes
	RSGB 7 MHz SSB
	ARRL CD Party—Phone
Oct 28-29	CQ Worldwide DX—Phone
	CQ-WE Contest
Nov 4-5	ARRL Sweepstakes—CW
	RSGB 7 MHz CW
Nov 11	OK DX Contest
Nov 11-12	IPA Contest
	Delaware QSO Party
	Missouri QSO Party
Nov 18-19	ARRL Sweepstakes—Phone
	All Austria Contest
Nov 25-26	CQ Worldwide DX—CW
Dec 2-3	ARRL 160 Meter Contest
	International Island DX Contest
	TOPS CW Contest
Dec 9-10	ARRL 10 Meter Contest
Dec 16-17	SOWP Christmas CW QSO Party

* = described in last issue

CALIFORNIA QSO PARTY

Starts: 1800 GMT Saturday, October 7
Ends: 2400 GMT Sunday, October 8

This contest is sponsored by the Northern California Contest Club. Of the 30-hour period, the maximum operating time shall not exceed 24 hours. Multi-operator stations may, however, operate the full 30-hour period. Times on and off must be clearly marked in a log. Each time off shall not be less than 15 minutes. All amateur bands may be used, and stations may be worked once on phone and once on CW on each band. VHF contacts are limited to simplex operation. A California station which changes counties (such as a mobile or portable) is considered to be a new station and may be contacted again on each band and mode. California stations may work each other. Also, DX stations may be worked by California stations for QSO points, but do not count as multipliers.

EXCHANGE:

CA stations send consecutive QSO numbers and county. Others send consecutive QSO number and state, province, or country.

SCORING:

Each completed QSO counts 2 points. CA stations multiply QSO points by the number of states plus Canadian districts (VE/VO 1-8)—58 maximum. Others multiply QSO points times number of California counties (58 max.).

FREQUENCIES:

CW—1805, 3560, 7060, 14060, 21060, 28060. SSB—1815, 3895, 7230, 14280, 21355, 28560. Novice—3725, 7125, 21125, 28125. Try 10 meters on the hour and 15 on the half hour between 1800 and 2200 GMT.

ENTRIES & AWARDS:

Log information should include date, time, band, mode, callsigns, and exact exchanges sent/received. Please remember to number each new multiplier as worked. A summary sheet should be included showing your callsign, name, address, number of QSOs, total number of multiplier (58 max.), claimed score, and whether the entry is single- or multi-operator. Summary sheets are available from the NCCC. Certificates will be awarded to the highest-scoring station in each CA county, state, province, or country. A mobile station must make a minimum of 20 QSOs to be eligible for a county certificate. Second- and third-place awards will be made when justified. In addition, certificates will be awarded to the highest-scoring mobile, portable, and multi-operator station. A plaque will be awarde

to the in-state and out-of-state clubs submitting the highest aggregate score.

All entries must be sent to: the NCCC, c/o George Varvitsiotes WB6DSV, 801 Inverness Way, Sunnyvale CA 94087, and must be postmarked not later than October 31. A business-size SASE is requested with each entry.

OCTOBER QRP QSO PARTY
Starts: 2000 GMT
Saturday, October 7
Ends: 0200 GMT
Monday, October 9

Sponsored by the QRP Amateur Radio Club International, Inc., this contest is open to all amateurs and all are eligible for awards. Stations can be worked once per band; general call is CQ QRP DE. . .

FREQUENCIES:

CW—1810, 3560, 7060, 14060, 21060, 28060, 50360. SSB—1810, 3985, 7285, 14285, 21385, 28885, 50385. Novice—3710, 7110, 21110, 28110. All frequencies ±5 kHz to avoid QRM, as license permits.

EXCHANGE:

Members send RS(T), state, province, or country, and QRP number. All others send RS(T), state, province, or country, and power input.

SCORING:

Each member QSO counts 3 points; non-members count 2 points per QSO; stations other than W/VE count as 4 points. Multipliers based on input power of transmitter: greater than 100 Watts — x1; 25 to 100 Watts — x1.5; 5 to 25 Watts — x2; 1 to 5 Watts — x3; less than 1 Watt — x5. Total score is QSO points times total number of states or provinces or countries per band times power multiplier.

ENTRIES AND AWARDS:

Certificates to highest-scoring station in each state, province, or country and other places depending on activity. One certificate for the station showing three "skip" contacts using the lowest power. Send full log data, including full name, address, and bands used, plus equipment, antennas, and power used. Entrants desiring results please enclose a #10 SASE. Logs must be received by Oct. 31 to qualify. Send all entries to: QRP ARC Contest Chairman, E.V. Sandy Blaize N5BE, 417 Ridgewood Drive, Metairie LA 70001.

NINE-LAND QSO PARTY
Starts: 1800 GMT
Saturday, October 14
Ends: 2359 GMT
Sunday, October 15

A maximum of 24 hours of the 30-hour period may be worked. The same station may be worked once per band and mode. If any station changes counties, it may be worked again.

EXCHANGE:

Nine-land stations send RST, county, and state. Others send RST, state, province, or ARRL country.

FREQUENCIES:

CW—1805, 3560, 7060, 14060, 21060, 28060, and VHF. SSB—1815, 3895, 7230, 14280, 21355, 28600, and VHF. Novice—3725, 7125, 21125, 28125.

SCORING:

Each QSO is worth 2 points. Scores shall be computed as follows: 9-land—number of QSOs times the sum of the number of states, provinces, ARRL countries, and 9-land counties times 2 points per QSO. All others—number of QSOs times number of 9-land counties times 2 points per QSO.

AWARDS:

Certificates to top score in each 9-land county, state, province, and ARRL country; 2nd and 3rd if justified. Also, top mobile, portable, multi-single, multi-multi, club, and Novice awards.

ENTRIES:

Submit summary sheet and log. Each new multiplier shall be clearly indicated. Send logs and a large SASE to: Ill Wind Contesters, c/o John Sikora WB9IWN, 8155 Woodlawn Street, Munster, Indiana 46321, for results.

JAMBOREE-ON-THE-AIR

The 21st Jamboree-On-The-Air will be held over the weekend of October 21 and 22. Suggested starting time is 0001 hours local time on Saturday, October 21, to terminate 48 hours later at 2359 hours local time, Sunday, October 22. These are suggested times only. Many stations find it more convenient to operate on the Friday evening and each station is completely free to select its own times and periods for operation. However, there is a better chance of finding overseas stations if the suggested times are followed.

Local regulations must be strictly adhered to. Look for stations around the official World Scout Frequencies, suggested by the World Bureau: Phone—3940, 7090, 14290, 21360, 28990, 53500. CW—3590, 7030, 14070, 21140, 28190.

This year's World Scout Bureau JOTA participation card uses a "key" symbol denoting JOTA's 21st birthday and copies will be sent to all participants, preferably to unit leaders for their units or to hams for presentation to Scouts at unit meetings. They are available on request from Boy Scouts of America, Attention: W2GND, SUM-0101, North Brunswick NJ 08902.

Hams are requested to submit reports for consolidation and report to the World Bureau, with pictures if possible for publication.

K2BSA at the National Headquarters, Boy Scouts of America, will be operating on CW, SSB, and SSTV, and will QSL—same address as above.

The World Scout Bureau, in conjunction with Scouts from Switzerland, France, and from the Boy Scouts of America, Trans Atlantic Council, will operate from a special international camp established at the Centre Scout de Satigny, a small village some 15 km from Geneva. With the cooperation of operators from the CERN Amateur Radio Club, it is planned to operate several stations simultaneously on all bands, including SSTV, RTTY, and OSCAR.

More information is available from Harry A. Harchar W2GND/K2BSA, Boy Scouts of America, North Brunswick NJ 08902, (201)-249-6000.

CARTG WORLDWIDE RTTY DX "DOMINION" SWEEPSTAKES
Starts: 0200 GMT
Saturday, October 21
Ends: 0200 GMT
Monday, October 23

Sponsored by the Canadian Amateur Radio Teletype Group, VE3RTT. Not more than 30 hours of operation is permitted, with non-operating periods taken at any time during the contest. Summary of times on and off must be submitted with score. Use all amateur bands authorized for F1 emission (RTTY). Country status as per ARRL country list; KL7, KH6, W/K, VE/VO, and VK districts to be considered as separate countries.

EXCHANGE:

Messages will consist of RST, time in GMT, and zone.

SCORING:

All 2-way RTTY QSOs with own zone will earn 2 points; all others as per CARTG zone chart (send SASE if needed). Stations may not be contacted more than once on any one band. Multiplier is number of different countries contacted including one's own on each band. Total score is total number of exchange points times number of countries worked times number of continents (6 max.). Canadian bonus points to be added last —100 bonus points for each VE/VO contact on all bands.

ENTRIES AND AWARDS:

Use separate log sheet for each band. Logs to contain band, date, time (GMT), RST, callsigns, and exchanges. Log sheets and zone charts available from CARTG for SASE or IRCs. Logs must be received before Jan. 1 to qualify. Engraved plaques to top 10 scorers plus other special categories. Certificates to top scorers in each US, VE/VO, and VK district and each country. Send logs, summary, and scores to: CARTG—VE3RTT, 85 Fifeshire Rd., Willowdale, Ontario, Canada M2L 2G9.

CQ WORLDWIDE DX CONTEST
Starts: 0000 GMT
Saturday, October 28
Ends: 2400 GMT
Sunday, October 29

Sponsored by *CQ Magazine*, the contest is open to all amateurs worldwide. Use all amateur bands, 160 through 10 meters. Entry classifications include: single-op, single and all band; multi-op (all band), single- or multi-transmitter.

EXCHANGE:

RS(T) and zone.

SCORING:

Contacts between stations on different continents count 3 points; stations on same continent but different countries 1 point, except for North American stations only!—contacts between stations within North American boundaries count 2 points. Contacts between stations in the same country are permitted for zone or country multiplier credit, but have zero point value. Multipliers are number of different countries on each band. Final score is result of total QSO points multiplied by sum of zone and country multiplier.

ENTRIES AND AWARDS:

Many various awards in different classes and categories. Plaque to highest club score. Logs should include all times in GMT; indicate zone and country multipliers only first time worked on each band. Logs must be checked for duplicate contacts; use separate sheets for each band. Each entry must be accompanied by a summary sheet showing all scoring information, category of competition, name and address in block letters, and a signed declaration that all contest rules and regulations have been observed. Official logs and summary sheets and zone maps are available from *CQ*; include a large SASE. All entries must be postmarked no later than Dec. 1 for phone and Jan. 15 for CW. Send logs to: CQ WW Contest Committee, 14 Vanderventer Avenue, Port Washington, LI, NY, USA 11050.

Check *CQ Magazine* for any last minute rule changes!

LETTERS

HAMS ON 49.9

Radio amateurs, caught up in the multitude of activities available on our bands, often fail to explore the possibilities in other regions of the radio spectrum. I believe 49 MHz is one such neglected area.

49 MHz (more specifically, 49.900 MHz) opened January 19,1977, to non-licensed operators of any age. And, although the FCC's intention to provide a more viable alternative to 100 milliwatt walkie-talkies on CB channel 14 is an honorable one, the frequencies hold potential for the amateur.

Perhaps the most alluring aspect of 49 MHz is the allowance of *any* type of modulation. That's right: AM, FM, SSB, SSTV, RTTY, CW, radio control, telemetry, computer code, etc. You name it!

An important consideration, and one the XYL will appreciate, is the equipment. It's cheap. Name another type of transceiver that you can purchase a pair of for fifteen dollars. And most of these walkie-talkies function in two modes, AM and CW—AM by means of a push-to-talk bar on the radio side and code by a keying lever on the face.

Part 15, subpart D, low power communications devices of FCC regulations, differentiates, in terms of technical specifications, between marketed equipment (i.e., commercially available *or* home built in a quantity greater than five and not commercially available) and home-brew rigs. For example, commercial equipment may operate on 49.845, 49.875, or 49.890 MHz with a modulation bandwidth of 20 kHz maximum; rf power is less than 10,000 uV/m at 3 meters on the carrier frequency. Specs for home-built radios are not as "tight." Modulation and rf carrier products must remain in the 80 kHz bandwidth between 49.820 and 49.900 MHz and the rf power restriction is 100 mW under modulation.

Some specifications apply to both marketed and brewed transceivers; sections 15.118 (e) and 15.119 (d) are identical. They describe microphone and antenna parameters. I quote: "The device shall be completely self-contained with the antenna permanently attached to the enclosure containing the device. If a microphone is used, it shall be built into the enclosure. No remote operating position is permitted (only remote telemetry of data is permitted)."

Any reader desiring a complete copy of pertinent FCC regulations may send me $1.00 (I'm not trying to make money, only cover expenses of duplicating, postage, etc.). If you simply have questions about 49 MHz, a self-addressed stamped envelope will suffice.

49 MHz is quickly becoming popular. In fact, a radio club devoted exclusively to the band boasts over 300 members in 30 states and 10 countries. The 49'ers sponsor contests, offer DX awards (25 km is rare DX on this band, folks), and compile lists of operators using the club's "AA 49" identification numbers. Information about the organization, founded by Dr. Michael Gauthler K6ICS, is available from: 49'ers Radio Club, P.O. Box 1400, Downey, California 90240.

While 49 MHz is not the future of ham radio, it offers the technician (type, not class, of amateur) a new frontier on which to experiment with flea power, the Novice a band for phone communications while studying to upgrade, and some members of W8UM (the University of Michigan Amateur Radio Club) an opportunity to build code speed. Certainly there are many more valuable uses for 49 MHz . . . but why stifle ham ingenuity with my suggestions?

F. J. Bartolomei WD8PCB
19442 Rockport Drive
Roseville MI 48066

J. B. FIELDS UPDATE

Several changes have come about in Navy training since I submitted my article last August (*73*, July, 1978). For one, code school does not graduate people at 22 wpm anymore unless that speed is stipulated in your orders.

One way to obtain the stipulation is to apply for the Submarine Radioman pipeline course in "A" school. If you are in the top ten percent of your class and meet all requirements, this should be more than easy. Recruiters have the details.

The pipeline grooms the "A" school grad for leadership in the fleet. He is taught maintenance, troubleshooting, and repair of all the major pieces of equipment in the radio shack. He is also taught administrative and leadership skills.

I went through part of the pipeline, RM "C7" school, in San Diego after leaving the *Grayback*. I found the course very interesting, fun, and helpful. As a result, I took the test for Petty Officer First Class, passed, and have been promoted to PO1. The fine leadership of my superiors on the *Grayback* and the *Barb* also contributed to this success.

After "C" school I turned down orders to shore duty (never did care for landlubbers), requested orders to an SSBN, and am now serving on board the *USS Thomas A. Edison-Blue*.

Duty on *Edison* has rounded out my sub career. It is a Polaris missile submarine. We have two crews and take turns on board and in port. One crew goes on a three-month nuclear deterrent patrol while the other trains in port. So I'm once more enjoying the Hawaiian paradise.

The "New Navy" concept has brought some changes to the submarine service. Being a WWII sub vet, Wayne, you might be interested. We no longer take our paychecks to the bars on payday, though the legends remain. Today's sub jockey is better typified as a well-educated, happily-married professional. Church services underway are well attended and the bullying of subordinates is no longer permitted.

One final change. Though I spent two years on the *Barb*, I spent too much time in schools and in overhaul to complete quals. I finally completed submarine quals and received my Dolphins on board the *Grayback*. What stories I could tell about the *Grayback*!

J. Burford Fields III WB7SZC
FPO San Francisco

TERMINATIONS

In reference to Carl Wagar's article,"Sidetone Is A Must," in the August issue of *73*, a basic TTL design rule was broken. Mr. Wagar states, "The peculiar thing about TTL is that when you leave an input unconnected, it treats it as though it were connected to a high (+5 V) voltage. So here we see that one input is connected to five volts, and when the key is up, the other input acts as though it were connected to five volts."

An unused input to a TTL device *should not* be left floating, as it can act as an antenna for noise. This is even more important on devices with storage, such as latches, registers, etc. On storage devices, unterminated inputs allow noise spikes to change the contents of the memory. To terminate an input high, the input should be held between 2.4 V and the maximum input voltage. Most LS devices have a breakdown voltage greater than 7.0 volts and can be directly tied to Vcc. Devices specified with a 5.5 volt breakdown should use a 1 kilohm to 10 kilohm current limiting series resistor to protect against Vcc transients. Another method is to connect the unused input to the output of an unused gate that is forced high (output of an inverter whose input is tied to ground). To terminate at a low, the input may be tied to ground.

Although the practice of connecting the inputs together of the same NAND or AND function is recommended for standard TTL, it should not be used with LS. The unused input should be tied high or low, as two inputs tied together not only increase fan-in, but also increase input coupling capacitance and reduce noise immunity.

P. Keith Muller WB1EXN
Andover MA

PEOPLE REPEATERS

I am glad someone finally spilled the beans about the General Mobile Radio Service; thanks to WA4EOX for a fine article in the August issue.

The monopoly hams have held on repeaters, even autopatch repeaters, is now coming to an end. Now every citizen has a right to communications on 460 MHz. I carry a little grudge against my fellow hams and former friends on this issue.

I used to be very popular with the local group—I was a club officer, helped plan dinners, worked exhibits, etc. Then in January, a CB emergency group approached me about a Class "A" GMRS repeater. As I began work on their license, the local two meter hounds kept a watchful eye on my operations. Some discouraged the whole idea of people using repeaters without having a ham license. No one

Continued on page 58

New Products

PROFESSIONAL-GRADE MOISTURE REPELLENT FOR WATERLOGGED ELECTRONIC GEAR

A recent fire in the apartment adjoining mine resulted in considerable water and smoke damage to most of my possessions, particularly the equipment in the shack. At about the same time, a news release arrived describing a new product, Chemtronics' industrial-grade DPL® spray for displacing moisture in electrical and electronic equipment and said to be especially effective as a way to get water-damaged electronic gear back in action in a hurry.

DPL sounded like it was exactly what I needed to get my gear dried out and cleaned up, so a call was made to WB2GMK, a copywriter at Chemtronics' ad agency. A couple of days later, several samples of DPL arrived and I eagerly tried the product on the now rather sodden collection of equipment sitting on the operating desk.

Presto! It really worked . . . quickly and effectively. No doubt about it, the DPL certainly enabled me to get everything shipshape and back in operation with a minimum of time and effort. And while most of my gear may no longer look truly mint, it is all working normally and without the need to replace any parts. There hasn't even been a blown fuse or tripped circuit breaker. With plenty of the DPL left, you can be sure that I'll routinely spray all of my equipment with it periodically in the future.

DPL is a newly-formulated industrial-grade spray that displaces moisture when applied to electrical and electronic circuitry, sockets, plugs, and other current-carrying areas of a device which has become wet, eliminating moisture-induced short circuits. As a bonus, the treated equipment retains a coating of DPL that protects against rust and corrosion outdoors for six months to a year and well over a year indoors. New equipment earmarked for use in wet areas can be given a light coat of DPL as a preventive measure. DPL has passed rigid lab and field tests for salt fog and humidity resistance, and is excellent for use on communications gear, radar, pump motors, engine ignition systems, and other electrical and electronic equipment aboard vessels of all types and sizes operating in fresh or salt water.

Spraying damp wiring, spark plugs, coils, distributors, etc., will help get waterlogged engines going again. Virtually any outdoor equipment which has become wet due to rain, leaks, even complete immersion in flood waters, can be restored faster with DPL. This includes telephone equipment, vending machines, elevators, alarm hookups, antenna rotators, and a long list of other gear. In short, if it uses electricity, DPL can help.

DPL is available exclusively through Chemtronics distributors. Details may be obtained by writing *Chemtronics, Inc., 681 Old Willets Path, Hauppauge NY 11787.*

Morgan W. Godwin W4WFL
Peterborough NH

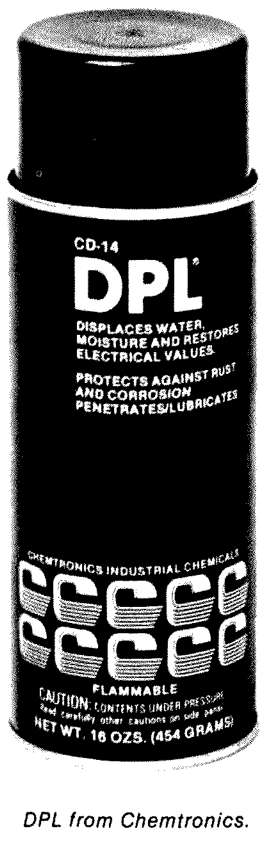

DPL from Chemtronics.

NEW MFJ SUPER FILTERS

For the past few years, I have used MFJ Enterprises' model CWF-2BX and SBF-2BX filters for CW and SSB with a variety of transceivers and receivers with results consistently superior to any other internal or external filters used. In one instance, after trying the MFJ CW filter with a $6000 receiver with excellent mechanical filters, the performance with the outboard unit was so much more pleasing I never again used the built-in filters. The little filters have been used for home and portable operation both here and abroad and until a couple of weeks ago I would have said that nothing could cause me to cease using them. *Then* I tried MFJ's two new filters, the model 721 Super Selector CW/SSB Filter and the model 720 Deluxe Super CW Filter. Like their predecessors, both of the new filters offer outstanding selectivity with remarkable freedom from the ringing and attenuation so many other filters introduce, plus new features that make them even more effective.

The top-of-the-line model 721 Super Selector CW/SSB Filter features a 2-Watt audio amplifier, switchable noise limiting, and an input selector for two rigs. The CW filter is an eight-pole (four cascaded stages) active filter centered nominally at 750 Hz. It has four selectable bandwidths: 180, 150, 110, and 80 Hz. In the 80-Hz position, the response is at least 60 dB down one octave from the center frequency. The filter significantly reduces noise and provides a very useful improvement in signal-to-noise ratio.

By using a pair of stereo headphones, you can take advantage of the effect of simulated stereo reception which conveys the narrow filtered signal to one ear and the unfiltered signal to the other. The ears and brain reject interference but allow off-frequency calls to be heard.

Among the performance-enhancing features of the model 721 is a self-adjusting automatic peak clipper for SSB. And for CW, there is a valley clipper which removes background noise smaller in amplitude than the received signal. Both do a very effective job.

The unit plugs into the transceiver's or receiver's phone jack and drives a speaker or earphones with 2 Watts of audio from an amplifier using an LM-380 audio power IC. It may also be used as an auxiliary audio amplifier. Power requirement is 9 to 18 V dc; an optional ac adapter is available ($7.95). Size is a compact 5" x 2" x 6". The model 721 sells for $59.95. Add $2.00 for shipping and handling.

If you're a CW enthusiast, you're sure to be impressed with the new model 720 Deluxe Super CW Filter. It uses the same eight-pole active filter as the model 721. One reason for the filter's outstanding performance is that the frequency-determining components are hand-selected to within one Hz of the nominal 750 Hz center frequency, providing very steep skirts. Also contributing to the unit's performance is its low-Q cascaded design which minimizes ringing. There is also a built-in self-adjusting noise limiter.

Like the model 721, the Deluxe Super CW Filter plugs into your rig's phone jack and will drive a speaker or phones with its 2-Watt audio amplifier. A 9-volt transistor radio type battery or an external 9 to 18 V dc power source is required (an optional ac adapter is available for $7.95). The unit measures 4" x 2" x 6". The model 720 is priced at $44.95 (include $2.00 for shipping and handling).

Both units are a delight to use. They provide several selectable degrees of selectivity to suit varying conditions on SSB and CW while also coping with noise and other problems that can make copying the desired signal difficult or even impossible at times.

The model 721 Super Selector CW/SSB Filter and model 720 Deluxe Super CW Filter are available directly from MFJ Enterprises. There is a 30-day money-back trial period. If you are not satisfied, you may return your purchase within 30 days for a full refund (less shipping). MFJ provides a one-year unconditional warranty on their products.

Continued on page 263

Looking West

Bill Pasternak WA6ITF
24854-C Newhall Ave.
Newhall CA 91321

I would like to speak about a word I consider very indecent—the word is censorship. I find this word far more abhorrent than any of the seven words which the U.S. Supreme Court recently ruled were to be banned from the airwaves of America.

Now, don't get me wrong. I am in no way in favor of profanity. Far from it. However, I do feel that, like beauty, profanity lies in the eye or ear of the beholder. What concerns me at a real gut level is our government telling us what we may or may not be permitted to listen to via our radios—in other words, government-approved and -supported censorship.

This recent Supreme Court action is based upon appeals of lower court decisions in a case involving New York City radio station WBAI-FM and its airing of a portion of a George Carlin album. The particular piece under discussion is entitled "Seven Words You're Not Supposed To Say On Radio and TV." I have heard this cut, and for those of you not familiar with Mr. Carlin's work, he is one of the new generation of "avant-garde" comics. He is considered by many, myself included, to be one of today's comic geniuses. In this particular rendering, Mr. Carlin satirizes the reluctance of today's broadcast media to permit certain words to be used in their broadcasting. He further states that there are other words which he feels are far more indecent than those the broadcasters have unofficially banned. It is comic satire at its best, although there are people in our society or any society who might be offended by such material and who by personal decison should not listen to it. This I respect. However, when someone says that you or I may not listen to it because "they" adjudge it to be indecent by their own personal standards, I take exception. This is basically the crux of the WBAI situation and the final decision in this matter by the U.S. Supreme Court.

WBAI itself is rather unique in today's broadcasting world. It is a totally noncommercial station which obtains the monetary support it requires from those who listen to it. It, along with its sister stations in Washington, Los Angeles, San Francisco, and Houston, is owned and operated by an organization known as the Pacifica Foundation. Both the Foundation and its media outlets believe in total freedom of expression as guaranteed by and under the Constitution of the United States, and the content of their programming reflects this dedication. I suspect that it was under this directive that the decision was made to air the Carlin album.

Now, as I understand the situation, and it is quite complex at best, a listener to WBAI found the particular material offensive and complained to the FCC about it. Eventually, this action took the entire matter into the courts and led to the Supreme Court decision. All well and good. However, one thing really bothers me. If a person finds such material offensive, then why does he continue to listen? If indeed he was so disturbed by it, why did he not exercise the best form of personal censorship available? Why not just turn it off or tune to a station whose program format was more in line with his personal tastes? I resent having your tax dollars and mine wasted on a matter such as this when all that one individual had to do was change the station. When you look at it in this context, the whole thing is pretty dumb.

What about WBAI? Were they right or wrong in airing this material? Frankly, I feel that they were legally right, even though they exhibited poor taste and bad judgment in doing so. I feel strongly that, as a broadcast outlet, WBAI had on obligation to at least be tasteful in what they offered their audience. They should have realized that somewhere a "Priscilla Goodbody," if I may borrow one of Johnny Carson's favorite expressions, was lurking in the woodwork, ready to pounce on them if given the opportunity.

Although WBAI should be admonished for poor judgment, I do not feel that one isolated case should be the foundation upon which government-approved censorship is erected. I would say that, in 99.9% of the cases, the broadcast industry's self-imposed guidelines have worked. What the broadcasters feel is offensive language has always been kept off the air. Therefore, if the Supreme Court felt that WBAI was wrong, it should have said so and gone no further. It should have looked at the overall record of the broadcast industry and then placed the onus right where it belonged: on your shoulders and mine. It should have left it to us to decide what we did or did not want to hear.

220 AND THE ARRL DEPARTMENT

"220 CB IS DEAD AND THE ARRL SLEW IT" read a banner headline not long ago. So, if 220 CB is as dead as the ARRL said it was, why then the action at the recent Directors' meeting in Newington to investigate petitioning the FCC to give Novices phone privileges on that band? Could it be that Newington was a bit premature in its self-serving praise? I think so.

However, at least this once (and much to their credit) they have somewhat admitted the error of their ways and have taken what I consider justified action. I would like to see certain restraints placed on this proposal so as to minimize the overall environmental impact there would be if thousands or maybe millions of new licensees were to come to 220. Actually, although the restraints I would like to see imposed are few in number, they would serve to protect already existing activity and make for more orderly growth patterns. Here they are:

First, I would limit Novices to a maximum of 10 Watts rf output (20 Watts PEP SSB) on all modes. Second, rather than have the entire 220 MHz band open, I would limit Novice operation to 223.0-225.0, to ensure the sanctity of control and auxiliary link channels and thus keep repeaters in line with control requirements as outlined in Part 97 of the *Rules and Regulations*. In other words, we should limit the Novice operator who will obviously come to 220 with little or no prior amateur experience to a portion of the band where he can learn operation without harming an integral part of relay system operation.

Third and final, I do not feel that a Novice should be afforded the privilege of repeater and/or remote base ownership. Why not? Remember that today the size of one's bank account is the one and only determining factor in repeater establishment. Figuring the potential number of new spectrum users such a rules change would bring, I feel both that there should be some incentive for a Novice to upgrade, and at the same time that relay activity on a technical level should be left to those most technically competent. A newly licensed Novice, unless he happens to be a communications engineer or technician, will not possess the competency level necessary to own and maintain a piece of mountaintop relay hardware. In essence, Novice phone privileges on 220 are a good idea—but for and on an operational level only. Realistically, this is what it will amount to anyway, with most Novices seeking out the best local repeater upon which to gab. Nothing wrong with that. I like to talk as much as the next ham, and it is only through talking with one another that we learn. The complexity of equipment required for 220 MHz operation does not lend the band to untrained and or uneducated experimentation. Like 144 MHz and from 450 MHz up, 220 separates the neophyte from the educated professional. If I were going to create a new experimental operations subband for the Novice, the absolute maximum I would go would be 50 MHz.

This leads me to another point. True, repeater growth on 220 has slackened off with the opening of the new 144.5 to 145.5 subband, but the 50 to 54 MHz region is in even more dire straits. Unless six is open to some exotic DX, it becomes dead, wasted spectrum. Even in a city the size of L.A., hearing activity is far from a day-to-day occurrence. The fact is that the CBers could probably walk in and take over without much notice if they wanted to. If any band needs a shot of activity, it is six, and I would love to see the ARRL proposal for extended Novice privileges include this band, possibly with full privileges. That is the place to experiment—not on a developing band like 220. Used commercial AM equipment and older SSB equipment is cheap and plentiful, and there are many low-band FM boat anchors still available for a pittance. Six needs the activity far more than 220, and I cannot think of a better way to get it.

Now, I realize that this latter proposal will raise cries of indignation from the miniscule (by overall comparison) number of amateurs who reside on six, in the same way I expect the ARRL's 220 Novice proposal to meet with similar cries of distress from those amateurs already there. I have but one answer. If it were up to me, I would rather see licensed Novice amateurs, individuals who have shown some proof of their abilities, inhabiting both bands, than have a total of 9 MHz of "10-4, Good Buddy—Over To You." Sure, 220 is "full" in southern California and growing in other populous areas as well. But travel across the country and listen for yourself. Try to get a QSO on either band. You can call your

lungs off all day and get nary a response. I may live in Los Angeles, but I do not judge overall 220 activity by what I hear here. Six? A few repeaters and a tad of SSB, and the only real activity comes with E or F2 skip. Even then, half of it is still AM. At least out here six won't be hurt one iota and 220 will get a lot more crowded. Elsewhere? Probably a lot more people will discover that there is a world above 148 MHz.

TWO METER EDUCATION DEPARTMENT

As you learned last month, the SCRA has changed its overall structure and split into two parallel organizations. With this column, I will put the SCRA name to rest; hereinafter, I will refer to the two organizations as SMA-144 and SMA-220.

SMA-144 has been quite active in a number of areas, although most of their major projects have been of an educational nature. They have entered into one joint project with the southern California chapter of Sidewinders on Two to produce a 10-minute educational "repeater QST," the purpose of which will be to acquaint area FMers with modes other than repeater and FM operation. It will include examples of such diverse operations as EME, weak signal SSB long-haul, and OSCAR work, to name but three. The tape, which will be produced through the facilities of the Westlink Radio Network, will also explain our two meter band plan covering all modes and why it is important that all amateurs respect this gentlemen's agreement. Copies will be sent free to all SMA-144 2 meter repeaters for dissemination to users as a QST. Also, copies of this area's band plan, along with an updated version of the "User Operations Guide and Repeater Listing," will be available. In the case of the area band plan, SMA-144 intends to distribute several thousand copies to all area equipment outlets and request that one be given free to each purchaser of any new or used two meter radio. The "User Operations Guide and Repeater Listing" will be updated to include the myriad of new recognized FM and SSB calling channels and established area two meter nets. This publication is available for 25¢ plus an 8½" x 11" SASE with 30¢ postage from SMA-144, PO Box 2606, Culver City CA 90230.

FLYING 220 DEPARTMENT

Dave Freedland WA6QXR is an attorney, and his job constantly sees him traveling hither and yon. Recently, Dave took a Wilson 220 MHz handheld along on a flight from Knoxville to Los Angeles via Chicago. His hand-held was equipped with the two most popular 220 repeater pairs: the high and low .34/.94s and 223.5 simplex. As they flew north toward the Chicago area, Dave reported a myriad of relay operations on both .34/.94 pairs, with call prefixes indicating the east coast. He found that the Chicago area had a rather high level of activity, with both repeater and simplex activity apparent. In fact, as his aircraft was making its descent into the Chicago area, he overheard a QSO on 223.5 simplex in which the participants were discussing 220 DXing. Although he was quite tempted to shake them up by breaking in with his "6" call, he decided to let discretion be the better part of valor in this case. After leaving the Chicago environs, Dave heard no other activity on his three select channels until he was around the Denver/Pueblo, Colorado, area, where he noted a rather whomping signal he assumed to be a 220 repeater in that area. Losing that as he winged westward toward L.A., the next signal he heard was the Mt. Wilson "high" .34/.94 (WR6AJI) as he crossed Nevada. When he reached the Nevada/California border, his "home" machine, WR6AWQ on Loop Canyon above Sylmar, was audible. To Dave, hearing 'AWQ meant he was home.

Now, while this is by no means a conclusive survey of all 220 activity, it is a good indicator of what is where. I thought it might interest you. One thing. If you ever do your own survey, or just want to operate "air mobile" from a commercial airliner, remember that before you turn on that hand-held, you must obtain permission from the captain. He's the boss, and his word is the law on the matter.

DX

Chuck Stuart N5KC
5115 Menefee Drive
Dallas TX 75227

In celebration of the beginning of a new sunspot cycle that promises to put all the deserving DXers on the "Honor Roll," and also because Wayne found an editor who would work cheap, *73 Magazine* is beginning a new monthly DX column with this issue.

This first column will serve mainly as an introduction to the new *73 Magazine* DX column and will give you a preview of some of the many features you can expect to find each month. Our aim is to keep you informed of what is happening on all fronts of the DX scene, including upcoming DXpeditions, new countries, new prefixes, QSL information, pictures and stories on interesting DXers, tips for the newcomers, and many more features. Let us know what interests you have concerning DX. If we are not covering your areas of interest, then let us hear from you.

We plan to cover most of the DXpeditions, not only in advance, but also later with in-depth articles, plenty of pictures, and even some of the behind-the-scenes goings-on.

Pictures! We plan to print pictures, lots and lots of pictures. Even some full-color shots of many of the major DXpeditions. We are also planning on a monthly "DX Photo Album" page containing ten or so pictures on each side of the same page that you can tear out and keep at the rig for handy reference. Just think, at last you'll know what that jerk who keeps covering you up in the pileups looks like, just in case you ever run into him in a dark alley some night. Also, it might keep the DX stations from "standing by for the YL" if they could see that the YL is really a 60-year-old OM with hairy legs and a beer belly faking the voice in order to get a contact. And don't think it isn't done every day. So send us pictures of yourself, the rig, the antenna system, etc. The more pictures we get, the more we can print.

That brings us to editorials. We probably won't have editorials per se in this column. I'm sure not going to try to compete with Wayne, but from time to time we would like to have a sort of point/counterpoint with guest editorials taking the pro and con sides of some topic of DX interest. Just send us about 500 words on any DX topic which you feel strongly about. Either for or against. When we receive both sides of the same issue, each presented in a fairly coherent and intelligent manner, we will print them side by side in the same column. This will allow a printed forum to air legitimate complaints, as well as give a chance to show both sides of issues that *are* important to DXers and hamdom in general. Feedback on these guest editorials will be printed in the regular letters to the editor section. We don't want to debate any issues in this column—just air both sides. All editorials will be identified with the author's name and call, so be sure to include that information.

Planned also is a "DXer of the month" profile on some active DXer each month. Not necessarily a "big gun" leading the honor roll or somebody just back from a DXpedition to Clipperton, although we will have them also, but usually just a guy or gal who is an active DXer whom we feel you might like to know more about. Here again we will need some feedback from you letting us know who some of the DXers are that you would like to read about. We not only want to cover his DX life, but we also want to take you backstage as well and find out if he beats his wife and kicks his dog, or vice versa, and whether he drinks his Coors on tap or right out of the bottle. Nothing short of a QSL from Bouvet will keep us from telling all.

Now, if you can't appreciate the significance of a QSL from Bouvet, then you are obviously a newcomer to DXing. But hold on, because we plan to have a special section just for you each month. It has been said that there are only two kinds of hams, those who are DXers and those who wish they were. Believe it or not, the FCC issues an average of 17,000 amateur radio licenses each month. This figure may pale when compared to the 300,000 or so CB licenses which are issued each month, but it is a very healthy figure for ham radio.

Let's be generous and figure 20% of those newly issued ham licenses to be renewals or upgrades of existing licenses. That still leaves 13,400 new hams being licensed each and every month. Now if only 25% of those 13,400 new hams become DXers, and we all know the figure is much higher than that (after all, what else is there?), that means that over 100 new DXers are coming on the HF bands every day. Now you know why the demand for even the most common DX can never be satisfied. It kind of makes you want to clean up our DX act when you realize how many newcomers every day are learning lifelong operating habits by listening to the way you operate.

In an attempt to help alleviate the mass confusion facing newcomers to DX, especially the ones not only new to DX, but new to ham radio as well, we will have a monthly "Novice Corner" explaining some of the terms and procedures particular to DXing. I'm sure we can all remember the first time we heard that the only way to get a QSL from a DX station that we had just contacted was to QSL via his manager with an SASE or with an SAE and IRCs, and thinking that that would be great but what is an SASE, an SAE, IRC, or QSL manager? Those are some of the terms, etc., that we will be explaining in detail each month.

Along with the new DX column, *73 Magazine* is also introducing a new DX Awards Program. Complete details on this new program can be found in next month's issue, so I will just hit the high spots here. The basic concept is a "Worked the World" series of awards consisting of a separate award for each of the six continents. Each award will be earned by contacting a certain percentage, approximately 80%, of the countries of that continent. There will be a "Worked Europe" award, a "Worked North America" award, etc. One interesting thing about the "Worked North America" award is the requirement of working most of the states as well as the other countries. Central America and the Caribbean will count towards the "Worked South America" award.

Elsewhere in this issue, you'll find information about contacts made on channelized ten meter AM. This is an effort to stir interest on this "use it or lose it" band. No contacts prior to the announcement date will count toward any of these awards. That way everyone will have the same chance for the special awards given for the first one awarded on each band/mode. The awards are very handsome and complement each other nicely.

As you can see, we have quite a few things coming up in the DX department here at *73*. I'm sure even *more* ideas will develop as we go along and as we receive more input from you readers on which features you like and which features you dislike. So again, let us hear from you. Please direct all correspondence to me: Chuck Stuart N5KC, 5115 Menefee Drive, Dallas TX 75227, USA.

DX NOTEBOOK

Iraq YI1BDG

Government permission was received on May 1st to operate at any time on 10 through 80 meters using 100 Watts. Hopes are high that the contest group from YU1BCD will be allowed to operate the station during the CQWW DX contest this fall. This would be a high-power, multi-multi operation that should put a king-sized dent in the number needing Iraq. The Radio Club of Baghdad is steadily growing. Look for them from 1400Z to 1700Z most mornings around 14220. Sometimes when things get a bit crowded they will move to 14310. Just look for the pileups. You can also QSL directly to The Radio Club of Baghdad, PO Box 5864, Baghdad, Iraq.

St. Lucia VP2LBH

Bob Hardy K2IGW plans to operate the CQWW DX contest from St. Lucia. Look for him before and after the contest as well. QSL to 341 Tracey Lane, Grand Island NY 14072.

Midway Island KM6BI

QSLs for the period from January 1, 1973, to August 1, 1978, can be sent to John Daugherty, 1019 Larencord, Lancaster OH 43130.

Willis Island VK9ZM

Look for this one in the 15 meter Novice band just below 21200.

United Arab Emirates A6XP

Bob reports that, for now, all amateur operation in the UAE has been halted and no new licenses are being issued.

Amsterdam and St. Paul Islands FB8ZM

Look for Henry at 4040 from 1000Z to 1100Z. Then, at 14225, find W4LZZ as MC. Later, around 0400, Henry can usually be found on 14225 with WØAX and sometimes FH8CY. QSL to W4LZZ.

Solomon Islands

The Solomon Islands gained their independence on July 7, 1978. The new prefix is H44, replacing the old VR4. Suffixes remain the same.

Market Reef OJØBW

This one was definitely a phoney. Save your postage and IRCs.

Continued on page 257

RTTY Loop

Marc I. Leavey, M.D. WA3AJR
4006 Winlee Road
Randallstown MD 21133

So far in this column, with few exceptions, references to Teletype™ machines have been to the Model 15 or Model 19. While I have felt justified in using these old workhorses as typical of the amateur station, many of you have taken me to task. Although a great many of you own Model 15s or Model 19s, many of you don't, and requests for information on other machines have arrived. I humbly comply.

Going way back, I doubt if there are still many Model 12s in service. This was the first Teletype machine generally available to amateurs. Most of them were manufactured in the mid-1940s, and they were built to last! These machines featured six individual selector magnets, a "latch" magnet, drew enough current to heat the shack, and produced enough RFI to jam the neighbor's radio. Still, it worked, and got many a ham on RTTY. An interesting feature is that, unlike more modern machines, the Model 12's *carriage* moved back and forth with the paper roll, much as a standard typewriter does.

The Model 15 was the next version introduced by the Teletype people. We have discussed this machine rather extensively in the past, and will say very little now. Notable are the facts that in the Model 15, the carriage is stationary, while the type basket moves, and two selector magnets run on the "standard" 60 mA loop.

Progress being inevitable, the Model 26 was introduced as a successor to the Model 15. Intended as a replacement for that somewhat noisy machine, widely in use in wire services and pressrooms, it was smaller, lighter, and quieter. Interestingly, it featured a return to the moving carriage, as on the Model 12. Instead of type pallets, as previous machines used, it introduced a type wheel, which was rotated to bring the correct character into position prior to striking it. You might visualize it as an early Selectric (IBM, forgive me!). Unfortunately, although the Model 26 was smaller, lighter, and quieter than the Model 15, it was much less durable. Under constant use they just didn't hold up, and many were sold to the amateur market in the late 1950s.

The next series to be introduced by Teletype, and for many years the sine qua non of RTTY, was the Model 28. Not just one machine, the Model 28 is a series which includes page printers, perforators, and transmitting-distributors. Since it comes in so many styles, let me take a moment to explain three commonly used designators:

RO—stands for "Receive Only." This is just a printer; no keyboard, no tape.

KSR—stands for "Keyboard Send Receive." This is the printer with keyboard; no tape.

ASR—stands for "Automatic Send Receive." Here is the printer, keyboard, reperforator and transmitting-distributor. A whole station!

In general, the Model 28 series of machines is a modern, quiet line that is easily interfaced for most amateur applications. With it, we return to the stationary carriage of the Model 15, but rather than individual lever-type pallets or a type wheel, there is a type box containing the individual type pallets, which are driven by a printing hammer. This makes for a quiet, efficient machine.

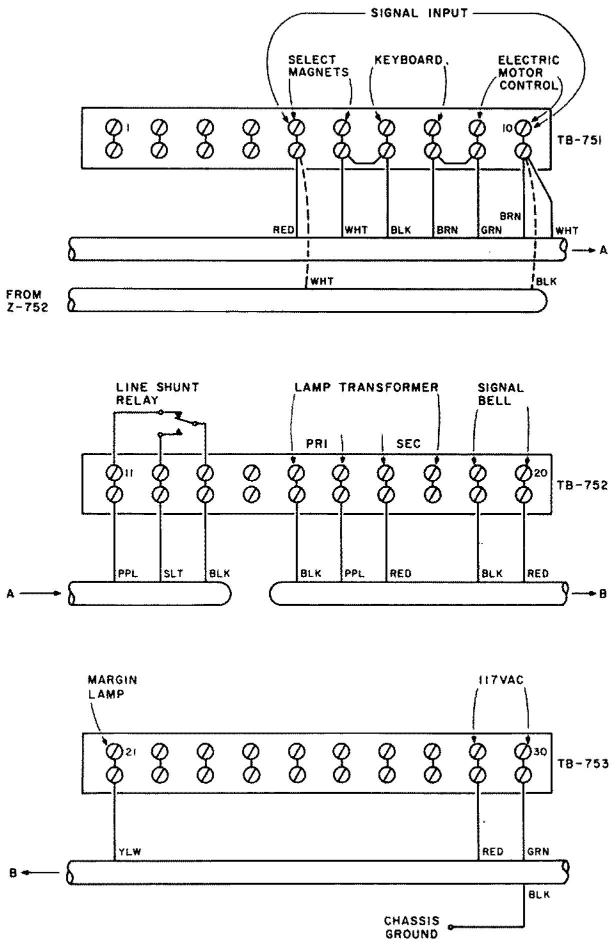

Fig. 1.

Unlike the Model 15, where the terminal strips used to connect the machine are located along the side of the teleprinter itself, the distribution for most 28-series machines is accomplished through three large strips mounted in the rear of the cabinet. There are three strips on the cabinet, from left to right, TB-751, TB-752, and TB-753. Each of these strips normally has ten terminals. Thus, terminals one through ten are on TB-751, eleven through twenty are on TB-752, and twenty-one through thirty are on TB-753. The ac power is brought in to terminals 29 and 30, usually through Z-751, an electrical noise suppressor mounted on the base. The incoming signal is filtered through Z-752, and then on to terminals 5 and 10. Terminal 10 is destined for the electrical motor control unit, deep in the bowels of the machine. The signal returns to terminal 9, where it surfaces, does a hairpin turn through a jumper to terminal 8, and dives down again, bound for the keyboard contacts. After squeezing through another noise suppressor, and clicking through the keyboard, the signal races upward and makes another pass through the terminal strip, coming out at terminal 7, goes around another jumper to terminal 6, and makes one more dive to the selector magnets. That trip ends up at terminal 5—remember that one?

To summarize, then, ac goes to 29 and 30; the keyboard is at 7 and 8; the selector magnets are at 5 and 6; and motor control (usually wired in series with the selector magnets) is at 9 and 10. By appropriate jumpering, the machine may be operated in full or half duplex. Fig. 1 is a schematic representation of the terminal strips with normal jumpering for single loop (half-duplex) operation.

Last month, we mentioned the compact, or rack-mounted, Model 28. On that style machine, rather than three large strips on the cabinet, one small strip is mounted directly on the machine. Owners of these machines are advised to study the manuals carefully before hooking them up.

A note from Reg Cherrill W3HQO/G3XNV touches on a common point of confusion. Reg writes, ". . . the FCC regulations . . . seem rather lax in stating firmly that only FSK can be used on the HF bands, yet I printed a chap out west who stated he was running AFSK equipment." This seeming paradox is easy to explain. Recall that if a single tone is fed to the input of a single sideband transmitter, a single rf signal is put out, which is indistinguishable from one generated by a conventional CW transmitter. If that audio tone is then shifted (AFSK), the resultant rf will be shifted a like amount, and the result will be plain old FSK. With many of the SSB rigs being used today, this is the only practical means to generate FSK RTTY.

I was literally overwhelmed by the response to the computer program in the July issue. By your letters and telephone calls, you have expressed a huge interest in this mode of RTTY. Let me offer a few tips to anyone using that program. While written for the SWTPC 6800, it should run on any M-6800 computer if a few lines are changed. Calls to OUTEE and PDATA, $E1D1 and $E07E, need to be changed to their respective routines in your monitor. OUTEE puts the data in the A accumulator out to the terminal as an ASCII character, and PDATA repeatedly calls OUTEE until a $04 is encountered, which terminates the subroutine and executes a

Continued on page 42

DXpeditioning

—a "how to" guide

Paul S. Goble WA2VMS
40 Boxwood Circle
Bryans Road MD 20616

The Wiesbaden Amateur Radio Club has embarked upon three DXpeditions in as many years. The first, to Luxembourg, was a learning experience. The second, in May, 1976, to Liechtenstein (see *73 Magazine*, October, 1976), was a qualified success, and the third, also to Liechtenstein, in May, 1977, was an unqualified roaring success! This article is an attempt to share the DXpeditioning experience of the Wiesbaden club with as many hams as possible. It is hoped that by doing so more groups not presently so inclined due to lack of appropriate information will feel encouraged to undertake DXpedition activities.

The Wiesbaden DXpeditioners (from left to right): Chuck DA1BZ, Hugo DJØLC, Paul DA2PG, Gerry DA2BA, Jean DCØHO, Terry DA1TH, Enge DA4BR, Carl DA1TT, and Mike DA1BM. Missing are Doug DA2AJ, John DA1NO, and John DA1HL. Lurking behind DJØLC with the HBØXAA sign is Jeanette, XYL of DA1BZ and fanatic club supporter. DA1TT and DA4BR are husband and wife.

The Basis

First of all, what is a DXpedition? There are probably as many definitions for the term as there are radio amateurs, but for the purposes of this article, a DXpedition is considered to be any trip to an area of low amateur radio activity in order to provide a desired increase in said activity. Note that there are three elements to this definition:

1. The aspect of travel and accompanying requirements for the necessities of life, i.e., food, shelter, sanitary considerations, etc.
2. An area (country, county, province, state, mountaintop, or whatever) with which a significant number of amateurs highly desire a contact.
3. The aspect of activity, which includes consideration of the frequencies and modes of operation desirable to the aforementioned significant number of amateurs.

In the case of the Wiesbaden club, the choice of location for a DXpedition

was made fairly easy by virtue of club location. The principality of Liechtenstein, on the border between Austria and Switzerland, is approximately six hours travel from Wiesbaden, Germany, by auto via the fantastic German and Swiss high-speed freeway system. There are only three active amateurs with HBØ callsigns, and a contact with the principality would be highly desirable to a significant number of amateurs on almost any frequency and in almost any mode of operation. As we say in Germany, "Prime" (pronounced "preemah" and meaning "prime" or "number one" or "right on" or almost anything along those lines). Having been stationed in Wiesbaden for some time, I have lost track, but there was a time when the same criteria could be satisfied with a trip up a tall New Hampshire mountain with a six meter transceiver, battery, and hilltopper beam.

The Organization

Picking a location for a DXpedition is a group effort based primarily on economics and time constraints. The Wiesbaden club brainstormed for a couple of monthly meetings and then wrapped up most of the details on two meter FM, thereby generating increased interest and whetting appetites of those club members not already involved. The process can be generalized as follows:

1. Make a list of all possible (practically speaking) locations which fit the definition of "rare" or "desirable." Using the Wiesbaden club to illustrate: Andorra, Liechtenstein, Luxembourg, San Marino, Spitzbergen, miscellaneous islands throughout the European area, etc.

2. Determine which location(s) would not be economically prohibitive to reach and where licensing is not impossible. Again using the Wiesbaden club example:

Liechtenstein—six hours by auto, therefore no special conveyances required. Everything else significantly further away. The only expense would be fuel, lubricants, and possible on-the-road repairs. Licensing is merely a matter of writing to the proper office of the Swiss government for application forms and sending the completed forms with a suitable sum in Swiss francs and a copy of one's home license back to them. Our club vice president, DCØHO, took care of this for the whole club. The result is a three-month temporary HBØ operating authorization which makes it all legal. Prime!

3. Determine the timeframe during which the greatest number of interested club members can make the trip.

Our planners came up with the last half of May, the same as the previous year. This time, however, based on increasing interest and the number of people who missed out last year due to limited DXpedition duration, it was decided to go for a total of about two weeks rather than only one. The easy access to the location picked was conducive to such a decision since people could come and go as their schedules permitted. At least one club member should be on location for the entire duration in order to provide continuity to the effort and establish relations with hosts and neighbors. DA1BZ and his XYL were able to fulfill this requirement in our case.

4. Determine the most desirable living method.

Several of the prospective DXpeditioners owned tents. A location on the outskirts of the little town of Planken was arranged through an HBØ amateur (again by our very own DCØHO) to include a water supply, toilet facilities, electricity, and an area in which to erect our tents. Planken lies on the western slope of a mountain ridge which forms the east side of the Rhine valley at that point on the river. The border of Austria and the principality is marked by the ridge line.

5. Determine what equipment would be desirable, what equipment is available, and get commitments from people to supply same. In the Wiesbaden case, we derived the following list: DA1AY—Swan 350; DA2AJ—Atlas 210X, SB-200, transmatch, headphones, tent; DA2BA—matchbox, HW-202, The Quad! A Truck! 2m yagi; DA1BM—antenna wire, 2m yagi, 70 cm yagi; DA1BZ—SB-401, SB-303, SB-200, tent, large spool of wire; DCØHO—IC-202, 25 W 2m linear, tent; DA1HL —A Truck!; DJØLC —HW-101, SB-200, antenna tuner,

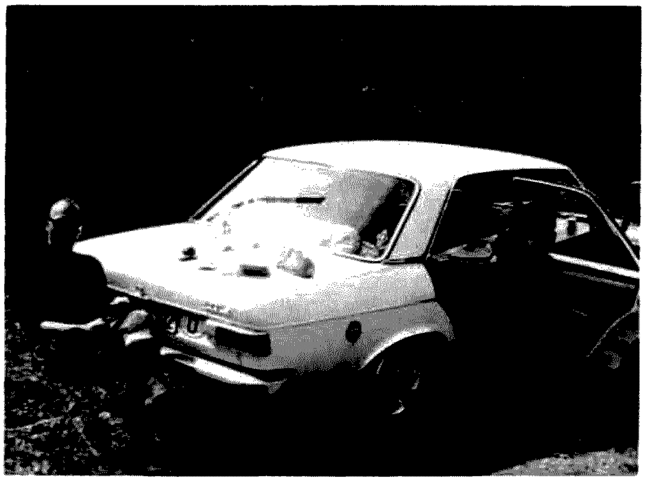

Hugo DJØLC taking lunch break by his auto-turned-HF station from which, using CW and dipole antennas almost exclusively, he worked 1015 contacts in 7 leisurely days of operation.

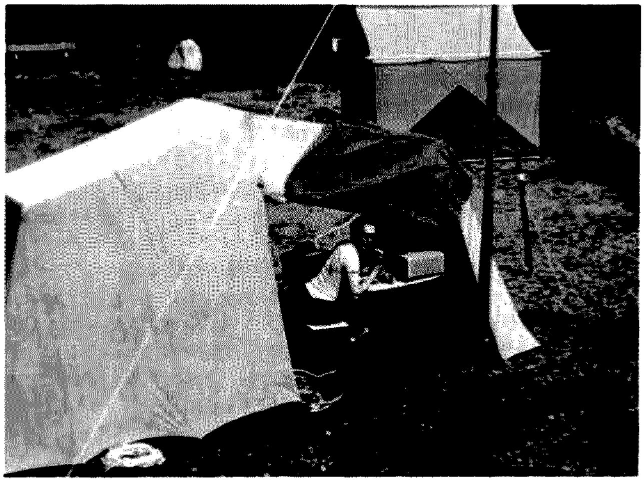

Chuck DA1BZ—#1 operating tent. #2 operating tent is in the background. The 2m SSB station is in #1 op tent behind Chuck, and the 70 cm FM station is in the back of the truck shown at top left of photo.

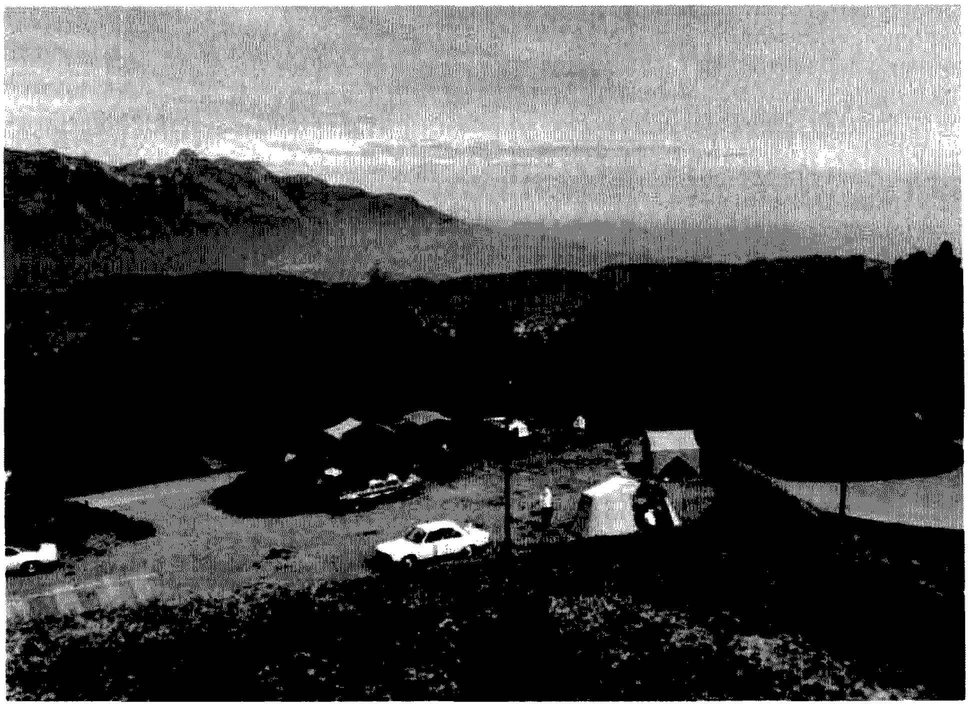

View of the DXpedition site from the quad installed just above the site. View is roughly WNW.

dipole antennas; DA1NO—HW-101, vertical antenna; DA2PG—QF-1, VOMAX, SB-614, IC-30A + GLB 450, headphones.

Miscellaneous items for which members "signed up" are listed below:

Grounding:
- Ground rods (6 ft. minimum desirable)
- Grounding strap or cable
- Grounding connectors (clamps, "bug nuts," and the like)

Power Considerations:
- Transformers (European ac power is 220 V, 50 Hz)
- Extension cords (of sufficient current rating)
- Multiple outlet adapters (both outdoor and indoor)

Rf Considerations:
- Coax cable (short interconnecting pieces and long runs)
- Coax connectors and adapters
- Dipole center insulators
- Antenna masts
- Low-pass filters for the transmitters as appropriate
- A large roll of insulated wire (we used #12 solid copper)

Common User Items:
- Tables
- Chairs
- Tents (if applicable)
- Coffee pot with supplies
- Miscellaneous

Be sure that you do not skimp on tables and chairs. Each station requires a table and at least one chair (unless installed in a car). If the logging function is to be accomplished by someone other than the operator, two chairs are required for each station. Those people on site not actually at an operating position will need a place to sit as well, making the requirement for tables and chairs perhaps larger than might at first be apparent.

6. Personal equipment and sundries should be the responsibility of each participating individual.

If you're camping, like the Wiesbaden club, an individual's kit might include the following: sleeping bag, air mattress, two blankets, toiletries, towels, changes of clothing (be sure the clothes fit the climate!!), a dirty clothes bag, etc.

7. Plan who will be on site, when, for how long, with what equipment, and who will be the last to leave (the clean-up crew).

This part can get pretty complicated with a large multi-station effort. Brace yourself: In our case, DA2BA and his son, DA1BZ and his XYL, DCØHO, and DJØLC all went to the site on 16 May with the preliminary truck and carloads of tents, equipment, and antennas. DA2AJ and DA2PG arrived the next day with another tent and more equipment. DA2AJ had to leave on the 20th, but DA1BM, DA4BR, DA1NO, DA1TH, and DA1TT all arrived on the 21st. On 23 May, DA2BA and son, DCØHO, DJØLC, DA2PG, and DA1TH left with a truck and carload of tents, equipment, and miscellaneous excess paraphernalia. All that was left was carefully coordinated with those club members staying on site to ensure that enough tent space, equipment, and antennas were left to keep everyone happy. DA1BM returned on the 26th, DA1HL arrived on site on the 28th with his camper, and then, on the 30th, the clean-up crew of DA1BZ and XYL, DA4BR, DA1HL, and DA1TT formed the rear guard and returned to Wiesbaden. Whew! All this would have been a whole lot simpler with only one or two stations and three or four people involved, but we found that it was pretty much a case of "the more, the merrier!"

The Rewards

The results of planning along the lines delineated thus far can be illustrated by synopsizing the operations of the Wiesbaden Amateur Radio Club DXpedition of 1977. The effort went from 16 May 1977 to 30 May 1977 under the callsign of HBØXAA. Between the 16th and 23rd, we had some 3000+ contacts, operating 80m through 70 cm. Modes of operation were SSB and CW on 80m through 10m, SSB, CW, and FM on 2m, and FM only on 70 cm. At one point during the weekend of May 21-22, we were operating simultaneously on 40m through 70 cm with the 40m station switching to 80m and back periodically. Needless to say, conditions were excellent that weekend! During this especially hectic time, one of the die-hard club members burst from an operating tent screaming "QRZed Pileup! QRZed Pileup!" as he bolted up the hill to the little house with the outside plumbing. Note the capital "P" on "Pileup!" That indicates a type of *reverence* reserved for those who have never been the cause

of a pileup, since it is a truly unique experience and is appreciated most fully by those who never caused one before. Remember your very first QSO? Very similar feelings!

At the height of the operation, there were two living tents, two operations tents (each of which housed an HF station and one of which also housed the 2m SSB/CW station), two HF stations installed in the back seats of autos, two 2m FM mobile stations, and a 70 cm FM station in the back of DA2BA's covered truck. Antennas consisted of a triband quad for 10m, 15m, and 20m, an 800' longwire with transmatch, a 350' sloping wire with matchbox, various dipoles, a base-loaded vertical, three 2m yagis of 4, 11, and 32 elements, and an 8-element yagi for 70 cm.

A look at a portion of the outskirts of Planken, Liechtenstein. View is roughly southerly from quad site.

Overall for the entire period, there were approximately 3800 contacts. More than 1400 of them were with stateside stations including Alaska, Hawaii, the Canal Zone, Guantanamo Bay, and Puerto Rico. Another 700 or so were Gs and EIs. We could have increased the overall number significantly if more operators had desired to stay up all night. With 20m open into the states from 8:00 pm to 7:00 am local Liechtenstein time and with 80m open simultaneously, one band went wanting for an operator on all but two nights when there happened to be two nightowls on site at the same time. Those two nights were really productive! This is not to say that more people should have felt obligated to stay up all night; DXpeditions should not only provide contacts to people needing a given area, but should be enjoyable to all involved in the effort as well. So it was for the Wiesbaden club!

Any club effort of any type has its memorable moments and this DXpedition was no exception. We noted that, since as band conditions changed we operated 80m through 10m, theoretically HBØXAA could have supplied a full 1% of a quest for the 5-band DXCC award. Since the only chance many of us had to be part of a station with which many amateurs desired a contact was this DXpedition, and since the only time we had been on the receiving end of a pileup was again on DXpeditions, this fact gave us a nice warm feeling. DA2BA got an individual charge when an amateur in Andorra called and asked for a QSL card. How often have *you* been called by Andorra for a QSL? DJØLC made 1015 contacts from the back seat of his car-turned-HF station, primarily using CW and dipole antennas, in less than a week and never going without a meal nor without a good six to eight hours of sleep per night. He showed handily that he is worthy of the Master Operator title which he holds! DA1BM answered a stateside "QRZed" with "This is HBØXAA, do you copy?" and the stateside station operator nearly fell off his chair, coming back with "You have GOT to be kidding!" After all, a new country (number 202 for him, if we recall his comments correctly) without having to fight QRM, rude operators (are there any of them?), and pileups in general only happens to the other guy! DA2PG was discovered asleep at the mic, having gone down with the 20m band sometime between 6:45 and 7:30 am local time with the last log entry lacking a closeout time. We wonder what the W6 on the other end of that QSO must have thought at the time! There was also an informal contest for the best DX contact. The candidates include Hawaii, Easter Island, New Zealand, and maybe something we have yet to find in the logs or incoming QSLs. We are hoping that almost everyone sends a QSL because we made WAC, we think we made WAS (Thanks for the contact, Gary! We hope that other guy's address is wrong in the callbook or we may not have North Dakota!), we are checking to see if we even came close to DXCC, we worked all provinces and territories in Canada (too early for their new award—phooey!), and we absolutely and thoroughly enjoyed every minute of the whole thing. What more could one ask?

The Lessons

There are several things which experience taught the Wiesbaden Amateur Radio Club DXpeditioners. The first and main thing is that old Murphy isn't *nearly* so tough if you plan and organize thoroughly enough. Aside from a bit of trouble from wet equipment due to condensation and a few rf shocks from grounding problems, the 1977 effort was remarkably

free from the usual incapacitating Murphy-like problems which one might expect in such an undertaking.

We also showed that if you are going to a non-English-speaking country,

HBØXAA sign with #1 operations tent in background. Many visitors came to the site during the 2 weeks of operations.

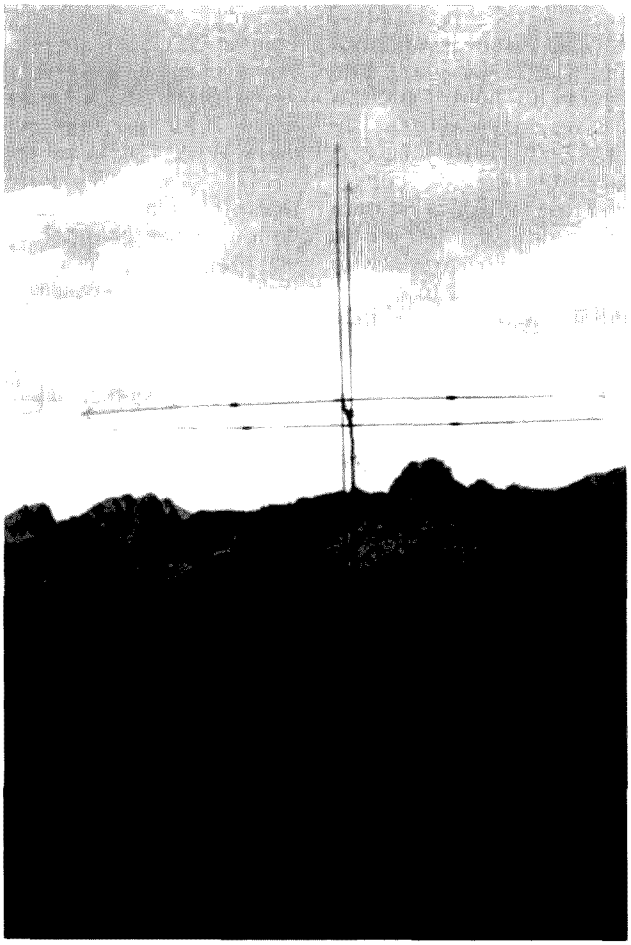

The quad—view from behind the antenna looking west over the Rhine Valley to the Swiss mountaintops.

have someone along who speaks the language if it is at all humanly possible. The simplest of arrangements or transactions can become a tremendous burden if you cannot communicate with your hosts. As an example, we experienced a TVI problem which could have turned ugly and ruined the trip; only our fluency in German and French prevented a small problem from becoming a large one.

Take along a large amount of insulated wire. We used #12 solid copper, but it could just as easily have been #18 and either solid or stranded. It was cut to quarter wavelengths for all HF bands used by a given station and connected to the back of the station transmitter. The result was a substantial reduction in rf shocks from the equipment. This measure was taken in addition to and as a complement to the normal electrical grounding systems already on site. Our hats off to Bill Orr for this one! Some of our wire and transmatch systems left quite a bit of rf floating around each station until we accomplished the above.

HF energy got into our ac power cords and made it impossible at times to operate 2m and 70 cm stations from the commercial ac power. This was not surprising since we were fairly space-limited to an area less than 60 feet on a side for all tents, operating and living alike, and we had three to four stations operating at any given time, up to three of which had 1000 Watts PEP output capability. The extension cords strung from end to end and side to side made great antennas. We had to run the 2m and 70 cm stations from automotive 12 V dc systems which, while no technical problem, was an inconvenience, especially when we ran one car battery down to the point that jumper cables had to be employed to start the car.

We found that in a multi-station, multi-operator situation it is desirable to have at least two triband antennas for 10m, 15m, and 20m, or a good beam for each band individually. We had only the quad and found ourselves limited several times. The wire antennas and dipoles just did not perform in the marginal situations!

Be sure to have a method of QSLing worked out in advance. In 1976, we had each operator QSL his own contacts, giving his DAxxx call as the source of an HBØXAA QSL card for that contact. This caused quite some confusion and led to long delays in QSLing. For 1977, we tried a better approximation of the proven QSL manager approach, with DCØHO the QSL manager for all phone contacts and DJØLC as manager for CW contacts. We still have yet to iron out the problem of having to wait until after the trip is over and the number of contacts is tallied before knowing how many QSL cards to order. This year the order totaled over $100 and the delays incurred during tallying, ordering, and waiting to receive the cards from the printer are, of course, delaying our efforts to reply to all the cards we started receiving even before we returned from the trip. Also, be prepared to hold a few extra club meetings to fill out QSL cards and don't forget cards for SWLs!

Headphones are invaluable for helping to keep the noise level *on* site down. We had our stations fairly well separated acoustically and still needed them. This was especially true during nighttime operations since tents do not keep sound in or out very effectively.

A tool kit with soldering implements and supplies is also a must, along with a selection of common capacitors and resistors. While proper planning can keep Murphy pretty well at bay, he is still going to sneak a couple of things by you, so be prepared for some minor repairs.

A Suggestion

We devised a method for raising the high end of a sloping or longwire antenna to be used in those situations when climbing is impossible. It may not be new, but it may be of value to some amateurs and is included here as a matter of interest. Attach a pulley assembly, complete with halyard, to the top section of a sufficiently long pole. Just below the top, perhaps 8 to 12 inches down the pole, attach a long rope. Select a tall tree, tower, or other slim structure which cannot be climbed, stand the pole up against it, and, while someone holds the halyard clear, wrap the rope around the combination pole-tree or pole-tower in Maypole fashion until the newly-installed pole is fastened securely to its support. We used this method to raise one end of a 500+ foot sloping wire, securing it to a smooth 4-inch diameter metal light pole, and for an 800+ foot wire which was secured to a tree located up the side of the mountain above the operating site. The tree, of course, was devoid of branches to well above the height of our halyard pole. In our case, the halyard pole was in sections with swaged ends which, as the top section with pulley and securing rope attached was raised vertically alongside the tree, were added at the bottom until the desired height was achieved. See the accompanying drawing for a depiction of our installation. Note that the halyard itself was a continuous loop to *prevent* such things as one end of the line ending up at the top of the pole stuck in the pulley, necessitating lowering the pole to get that end of the halyard. A synopsis of the installation procedure follows:

1. Raise and secure the halyard pole as described above.
2. Secure insulators to the appropriate lines at both ends of the proposed installation. In our case, one end was fixed to a utility pole and the other insulator was fastened to the halyard.
3. Lay out the antenna wire and secure at the end opposite the halyard.
4. Temporarily fasten the remaining end of the wire to the halyard insulator.
5. Raise the halyard insulator and antenna wire to the top of the halyard pole.
6. Check the antenna wire for sag.
7. Lower the antenna and remove wire as necessary to make the antenna tight when it is subsequently raised.
8. Secure the antenna wire to the halyard insulator again and raise it once more to the top of the pole.
9. Repeat steps 6, 7, and 8 until you decide that it is not practical to try to get more sag out of the antenna. Remember that for the longer antennas, the strength of the wire becomes important since the wire might break before the antenna is tight enough to achieve minimum sag, so be careful to select a wire having sufficient tensile ratings.

Final Comments

Note that there is quite a bit of similarity between the Wiesbaden club concept of DXpeditioning and Field Day operations. With the exception of the use of commercial power, this is the case. The only big difference is the aspect of travel, which is in itself merely an expansion/extension of the transportation which is also required for Field Day. More care is required in packing and transporting the equipment, but how much trouble is that?

"That's all well and good," you say to yourself. "These Wiesbaden clowns live right in the middle of some of the greatest DX in the world. It's easy for them to talk about DXpeditions!" Well, you are absolutely right, but so what? Don't let that stop you. So you might not be able to go to an exotic location every year. Do you have to go every year? What about that six meter station to New Hampshire—is that still a valid DXpedition? If not, is some other state rare on 6m, 2m, 1¼ m, or 70 cm? How about a site on the North/South Dakota state line, with one operating station in one state and another just across the state line in the other state, if not on VHF, then HF. The trick is to look back to the definition of DXpedition. Where can you go and what mode should you operate on what bands in order to cause a pileup? The definition of pileup varies, too.

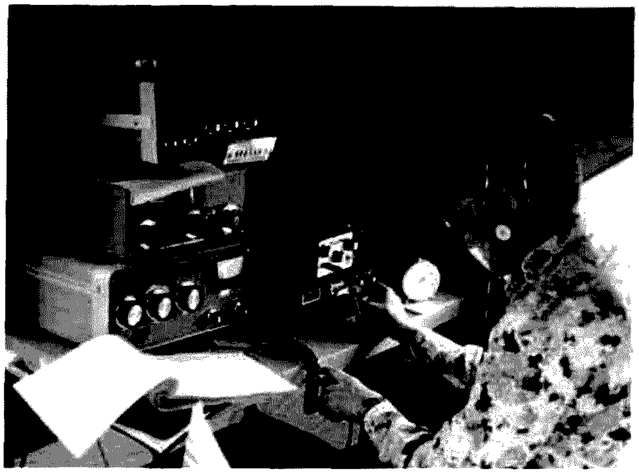

Doug DA2AJ in #2 operations tent. Audio processing gear, both TX and RX (VOMAX, AUTEC QF-1, respectively) proved to be quite effective during noisy and/or pileup conditions.

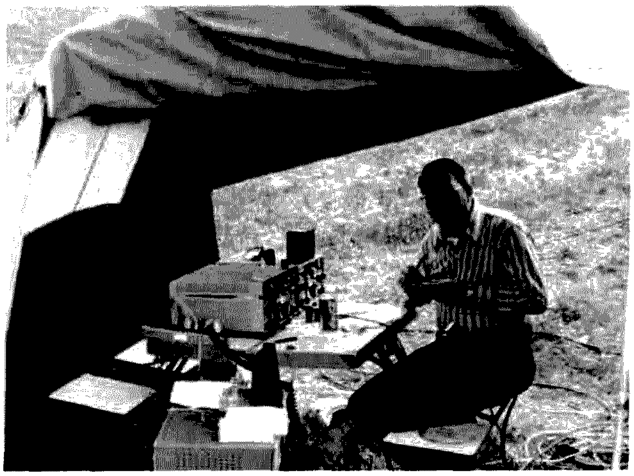

Gerry DA2BA at the helm in #1 operations tent.

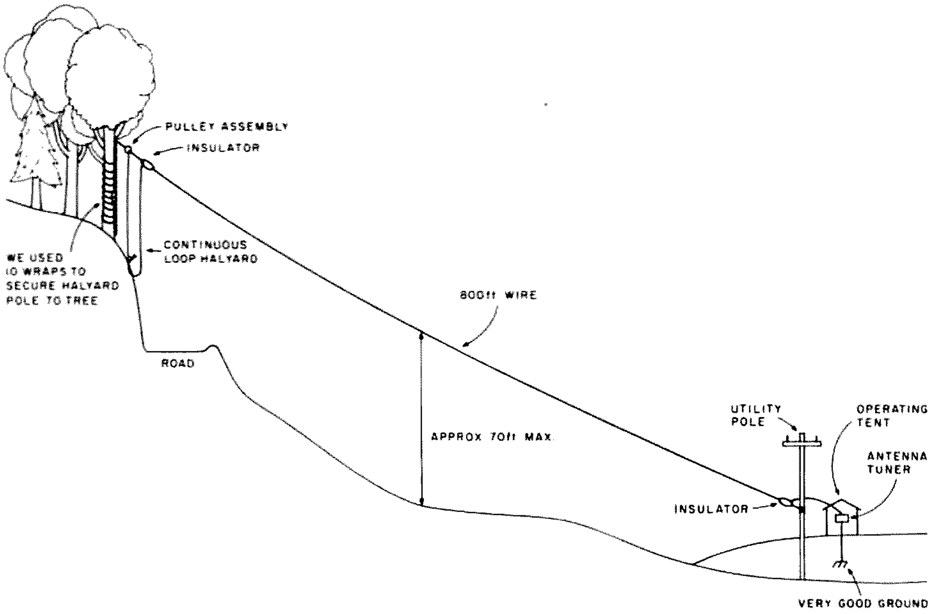

What kind of pileup did the Pack Rats get in the EME mode from South America? Compare that to one which might be generated on 20m. It's all relative.

If, after all is said and done, an exotic location is a must for you, then the planning stage can be extended somewhat to include a fund-raising function if necessary. It is amazing how much money a refreshment/hamburger stand can net at a hamfest. It is equally amazing how easily a modest income may be realized by sponsoring a hamfest. There are also any number of excuses to have a bake sale at your local shopping mall. The possibilities are endless. Merely set guidelines beforehand as to what each member of the proposed DXpedition is going to supply in terms of fund-raising, time, and/or equipment or whatever. Once the guides are set, anyone not meeting his end of the bargain stays home. On the other hand, all who do their part stand to go on a paid vacation (well, almost paid . . . subsidized?) to Ham Heaven for a while! It has been shown that any club can do anything to which it sets its collective mind. Clubs are demonstrating this daily throughout the world. It is sufficient to say that, with proper planning and effort coupled with great attention to detail, you, too, can experience the excitement and delight of putting a rare location on the air.

Of course, there is always the alternative of sitting there and eating your heart out! ■

T. L. Seevers WB0CLH
2133 Heather Lane
Lincoln NE 68512

VHF On Your Frequency Counter

—*an easy-to-build prescaler*

Any ham with a few sets of crystals in his two meter rig can tell you why the frequency counter is becoming a popular piece of test equipment. With this upsurge in interest, it is a welcome coincidence that counter prices have decreased significantly. Fortunately, there have been accompanying reductions in size. Buying a counter, however, can be a difficult process because of the many options. These options include kits, home-brew equipment, and many fully-assembled units.

I chose the Heath IM4100 because of its low price and high function. Combining this counter with an easy-to-build prescaler for VHF work proved to be a winning combination.

The Basic Counter

The Heath counter contains some excellent features not normally found in a unit of this price range. It provides for interval measurement as well as counting up to 99,999 events. An input attenuator allows a wide range of input voltage levels. Also, provision is made for power to be supplied from a 12-volt source. It would be nice to have some additional display positions, but the selectable timebase allows reading non-prescaled frequencies to the nearest cycle. The timebase is not temperature-compensated. Consequently, a WWV source is useful for periodic calibration. Heath specifies the frequency range of the IM4100 as 30 MHz. In practice, however, the counter appears to work well into the 40 MHz range (mine went to 45 MHz).

The Prescaler

Although several assembled prescalers are available, building your own is a good choice. They are simple to build and the savings can be significant. I chose the 11C90DC because it is readily available and requires few external components. Also, it should run cooler than its predecessor, the 95H90. The 11C90 divides the measured frequency by ten. This multiplies the effective range of your counter by ten. This should extend the capability of the IM4100 through the VHF range and possibly into the UHF band.

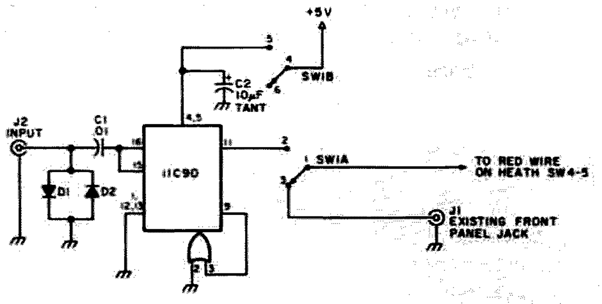

Fig. 1.

The prescaler circuit provides a second input to the counter for higher frequencies and a switch for input selection. In the schematic, J1 is the existing front panel BNC jack. In nonprescaled operation, the signal merely passes through SW1A and back to the existing input circuitry of the counter. At this time, the prescaler is isolated from the circuit with power removed. This reduces heating and current consumption. When the prescaler switch is turned on, voltage is applied to the 11C90 through SW1B. A BNC jack on the rear panel (J2) provides signal input to the prescaler. Prescaler output is routed to the normal counter input through SW1A.

Supply voltage for the 11C90 is provided by the counter. The Heath circuitry draws approximately 1.1 Amps from the five-volt regulator. The prescaler adds less than 100 mA to that load. I noticed no loss of regulation or regulator heating with power applied to the prescaler. The 7805 regulator used in the counter has an output current rating which varies by manufacturer. It is normally rated in excess of one Amp.

Construction

PC board mounting is recommended for best performance of the 11C90. The PC board is mounted in a location where there are few components on the main board. It may be necessary to bend over C14 on the counter to give sufficient clearance for your PC board. The prescaler is mounted by removing an existing PC mounting screw. This is replaced with a hollow spacer and a screw of suitable length.

When I began the project, it was my intent to preserve the value of the counter by avoiding significant modifications to the chassis or wiring. With this in mind, I mounted the rear panel jack and switch in two existing holes. This required sacrificing the external oscillator input. Wires connected to these jacks are taped back. If you want to retain the oscillator jacks, there is ample room to drill the required holes. Be sure to include a solder lug when mounting the new jack.

On the front panel, the red wire is removed from the existing signal jack. This wire should be connected to the center conductor of RG-174 coaxial cable leading to SW1A-1. The front jack is then connected to another cable leading to SW1A-3. All shields should be grounded. Install cable to connect the prescaler with J2 and SW1A-2 according to the schematic. Five volts is obtained by connecting through SW1B to one of the bare five-volt

jumpers near D3 on the counter.

Testing

When wiring is complete, power up the counter without the 11C90 in its socket. Turn on the prescaler switch and ensure that voltage is present at pins 4 and 5 only. Having checked this, power down and insert the 11C90. Be sure it is not installed backwards. Power up and check the 11C90 for moderate warmth (beware of ac voltage). If the chip becomes extremely hot, power down quickly and double check your wiring. If everything looks fine, check the counter five-volt supply to be sure that it does not drop with the prescaler turned on.

An initial check of the prescaler can be made using the counter's internal clock. It is available at the rear panel. If you borrowed the oscillator jack, it is the orange wire that you removed. Connecting this signal to the front panel jack will yield a reading of 1.0 MHz. Routing this signal through the prescaler should produce a reading of .1 MHz. The prescaled input seems to produce the best results with the attenuator in the X1 position.

I fashioned an antenna from a BNC connector, an old CB whip, and some RG-8 insulation for a grommet. Using this antenna, a one-Watt handie-talkie produced a stable reading. Since the ounter is unaware that the input has been divided by ten, the decimal point will be ncorrect when prescaling. To orrect for this, just multiply eadings by ten.

Parts

All parts, except the BNC onnector, may be obtained from Jameco Electronics, 021 Howard Ave., San arlos CA 94070. A PC board for the prescaler is available for $3 from RTC Electronics, O Box 2514, Lincoln NE 8502. Diodes D1 and D2 are N914 or 1N4148. C2 is a 10 uF tantalum capacitor. A 16-pin socket is also convenient for the 11C90.

I am very pleased with the performance of the counter after modification. The result is a versatile and extremely useful piece of test equipment. If you are one of the hams who still likes to do a little home brewing, I know you will enjoy this project. ■

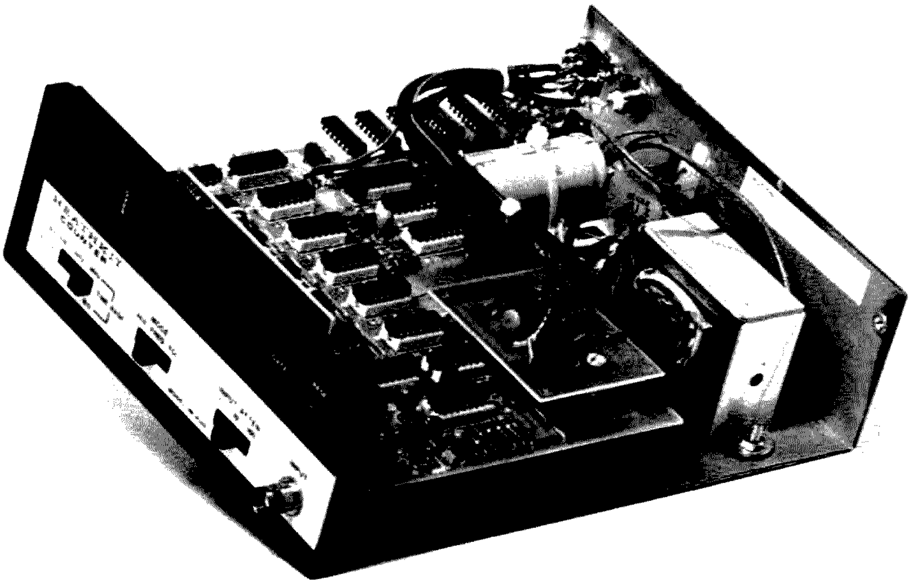

The prescaler board is mounted above the main counter board. Coaxial cable connects the prescaler with the front and rear panels.

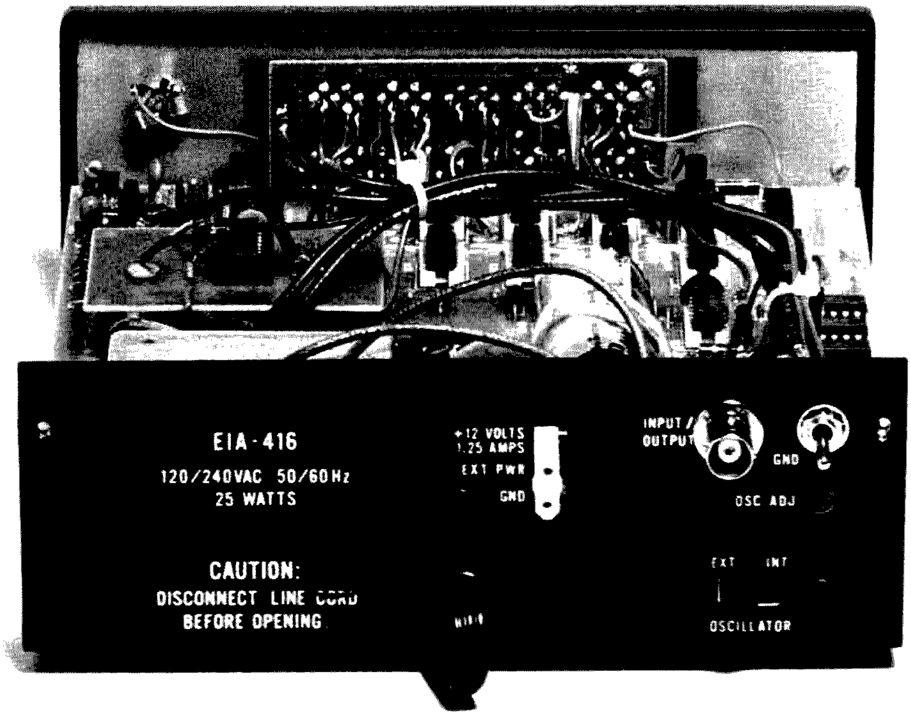

Existing chassis holes were used for the prescaler input and on-off switch. These components are shown mounted in the upper right-hand corner of the rear panel.

Robert B. Wood WA1JWD
216 Church Street
West Barnstable MA 02668

The KM1CC Story

—*hams celebrate Marconi's miracle*

The raucous simulated rotary spark-gap transmitter inside the surplus army barracks over the dunes from the Atlantic surf in South Wellfleet sent President Carter's words honoring Guglielmo Marconi out from Cape Cod to the Cornish Radio Club at Poldhu, England, and to the world in general. It was an old sound searching the air waves for new ears 75 years after Marconi's first wireless message traveled the same ocean.

Marconi's message to King Edward VII from President Theodore Roosevelt in 1903 was the first of its kind, paving the way for amateur and commerical radio as it's known today. The Town of Barnstable Radio Club Special Event Station, KM1CC, was on the air nine full days, January 14 to 22, 1978, on all bands, in all modes, even during a major snow storm, commemorating this great feat of 75 years ago. It talked with amateurs around the world from near the original Marconi station site.


Young Marconi, about 25, in England, several years before he came to the United States.

Some 60 operators manning eight transmitter/receivers made 7,740 contacts during Marconi Week. About 40 percent were with stations outside the United States, including an SSTV contact with Ascension Island. But that was not the high point.

That came promptly at eight pm on the 18th when head man and control operator Robert Doherty K1VV opened an Angelo's paper bag and carefully fed the prepunched paper tape, containing three notable messages, into the keying head. Three-quarters of a century to the minute after Marconi sent the first wireless message from the United States to

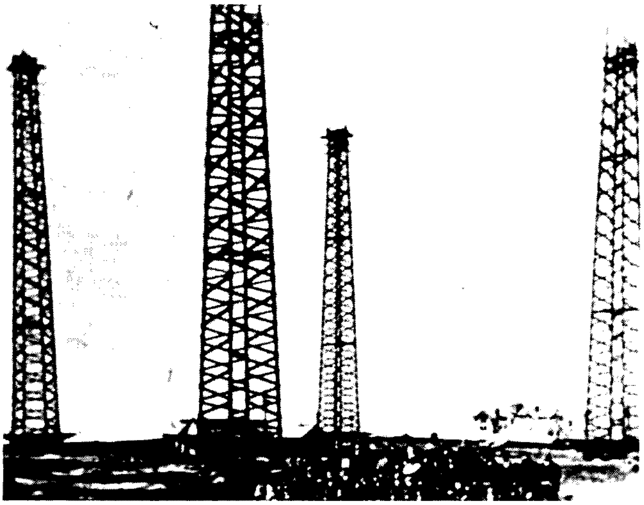

Reinforced wooden towers surround station CC buildings from which the famous message was sent January 18, 1903.

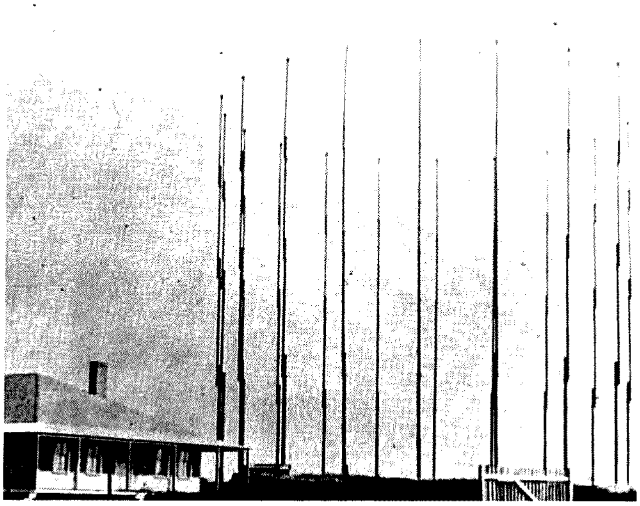

A September gale in 1901 took these 20 towers, 200 feet tall, down before they could be put to use. Four reinforced wooden towers were quickly put up.

England and got one back, another message was on its way. In Poldhu, it was one in the morning the next day. A great man was being honored.

News reporters crowded the room, and radio station WQRC broadcast live a description of the tape, simultaneously keying the 80, 40, 20, and two meter transmitters. Benjamin Tillson W1HWO read the messages on 40 meter SSB, also.

The President's message was followed by another from President Giovanni Leone of Italy and one from Marconi's daughter, Gioia Marconi Braga. It took nearly an hour, and smart hams had their tape recorders running, striking in rock the 240 Hz tone.

President Carter said in his message to the world:

> "Seventy-five years ago, a new era of international communications was heralded in by an historic exchange of messages across the Atlantic . . .
>
> "That exchange marked a milestone in the history of communications. Since then, we have built on the invention of the distinguished Italian physicist and others a global communications system that allows instant contact . . .
>
> "It is fitting that we commemorate the event both with gratitude for the ways in which science and engineering have helped to unite us and with fervent hopes that such communications will serve the future course of peace and human progress everywhere."

President Leone of the Republic of Italy said:

> ". . . I recall with admiration this great Italian's inventive capabilities and enthusiasm which have given new dimension to the contacts be-

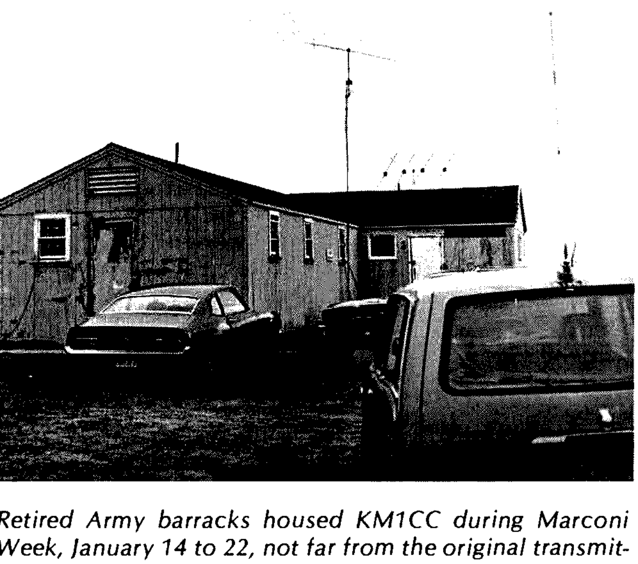

Retired Army barracks housed KM1CC during Marconi Week, January 14 to 22, not far from the original transmitter site.

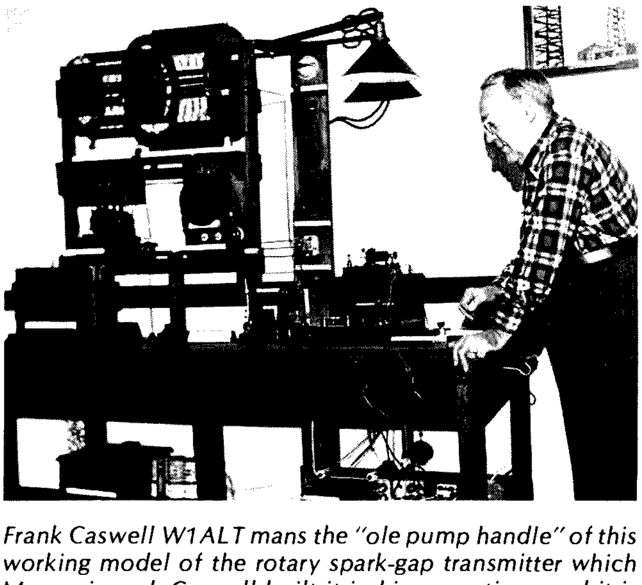

Frank Caswell W1ALT mans the "ole pump handle" of this working model of the rotary spark-gap transmitter which Marconi used. Caswell built it in his spare time, and it is housed in the National Seashore Visitor's Center.

Duncan Kreamer W1GAY, QSL manager, worked 80, 40, and 20 meters SSB.

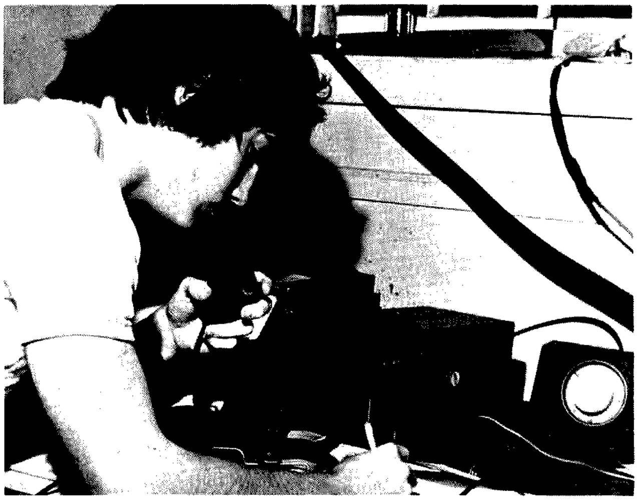

Douglas Carey WA1UMC, KM1CC's youngest operator (17 years old), takes a turn here on two meters. Doug worked mostly 40 meter CW.

tween men of every continent by achieving a decisive step forward for science.

"All over the world, radio amateurs participate in this new dimension and, with the same enthusiasm, have created among themselves a close network of contacts. To this network is owed daily the savings of human lives, both on land and on the sea, as well as the progressive deepening of a sense of solidarity which overcomes all boundaries and which strengthens the hope for a better future."

President Carter's message goes out on 40 meter SSB with Ben Tillson W1HWO doing the reading. Commercial station WQRC announcer monitors in background.

In her tribute to her father, Ms. Braga said:

"... He considered amateurs part of his spiritual family. To a young man who downgraded himself because he was only an amateur, my father replied, 'Don't forget, young man, that I, too, am only an amateur.'

"I think we all owe a debt of gratitude for the services amateurs have rendered unselfishly to mankind on so many occasions ... more dramatically in times of emergency, but more consistently from day to day in just keeping watch over the waves of the air ...

"The magic of radio endures in their hearts ..."

The messages ended and Doherty began work on the 80-meter transmitter. It had quit in midmessage, and two more transmissions were scheduled...one at ten o'clock and the last at midnight. Besides, there were lots of stations out there clamoring for a contact and a QSL card with Marconi's picture.

The activities that night, though fast in passing, took a long time to get ready for. The messages were the bottom line for Doherty and The Barnstable Radio Club on over two years of work. From the 18th to Sunday was pure pleasure (with the exception of a snow storm), but, before that, it had been sweat. However, Doherty believes, Marconi's amazing gift to civilization of instant worldwide communications deserved all the labor.

Doherty contacted businesses, institutions, and people in communications for funds and equipment. Club members and nonmembers alike loaned and donated gear. CW, RTTY, SSTV, SSB, and OSCAR activities were planned. Massachusetts Governor Michael Dukakis proclaimed January 12 to 22 Marconi Week, and the FCC issued a Special Event Station KM1CC license for the same time.

Robert Doherty K1VV, in charge of the The Barnstable Radio Club's Marconi Anniversary event, keys the fuzz box (240 Hz tone) while working MCW on 3555 kHz.

On RTTY, around 3610 kHz, was Lewis Masson K1LJS of Chatham.

Services of the National Seashore were invaluable, Doherty said, as was the Nauset Regional School District, which provided the building, a signal flag's distance from the original site.

The National Seashore Visitor's Center near the operating site had on exhibit a working model of Marconi's rotary spark-gap transmitter constructed by Marconi historian Frank Caswell W1ALT. On view also, a decade-by-decade showing of radio equipment, from an early coil coupler to a modern WCC inked paper readout receiver, loaned by RCA Globcom, Inc., in Chatham, rolled back the years for the hundreds that visited daily. Alan Curran WA1WIE had the job of putting it all together.

Caswell and members of the Club explained other exhibits, including pictures and memorabilia from the old site, and offered a slide show about the Marconi station. And there was outdoor work, also.

To prevent the white-finger syndrome so common to radio hobbyists during the winter, halyards, pullies, and poles had been put in place during the warm months of the summer and field-day tested. Reworking and adjustments continued up to the last minute with a crew directed by W1HWO. Amateurs way out there weren't overlooked either.

Worldwide announcements went out on amateur radio networks in all modes, and the historian put the bits and pieces together for those who didn't know.

Caswell observed that Marconi's old station had, at different times, calls of CC and MCC. In commemoration, the FCC licensed the station KM1CC. A commercial offshoot of Marconi's station, WCC in Chatham, handles world messages to ships at sea today. But what about the old station?

Marconi's 30,000-Watt transmitter rammed electric sparks similar to lightning across an air gap. Each time a spark jumped, an electromagnetic wave radiated away at 186,000 miles per second and, at about 200 kHz, hugged the Earth pretty well. This latter point astounded physicists and engineers of that time. Short-interval sparks meant a dot, longer intervals a dash — very nearly a continuous wave.

KM1CC, isolated as it was among the dunes, experienced no difficulty with TVI. It would be easy to conjecture that Marconi, too, had little difficulty in that sense, since there weren't any TV sets then. Not so, according to former Park Historian Edison P. Lohr. It seems the station cook was afraid to hang out the wash because the damp clotheslines, loaded with rf, delivered nasty bites.

There also were complaints at the time about telephone interference, but nothing materialized,

Six meters attracted quite a few off-Cape stations, shown here being worked from KM1CC by Ben Richardson WB1CUA.

Lohr said.

Lohr also reports the antenna of the first station caused mutterings in the local Cape community. Twenty 200-foot masts had been planted in a circle in the sand near the sea cliff in South Wellfleet. Marconi wanted nothing but sea water between his high wire and Poldhu.

But the Cape Codders knew, and true to their predictions, a soon-a-comin' nor'easter, similar to the storm that whacked KM1CC January 19 and 20, took the poles down. Marconi put up four reinforced wooden towers, a complex of wire radiators, and transmitted the first wireless messages across the Atlantic.

Launched by Marconi on its historic mission in 1903, the station lasted until 1917, when it had to be abandoned because of the crumbling cliff and the sea's steady inland march.

Today, a visit to Marconi Beach shows only half the land of the original site remaining. A few timbers, cement anchors, and iron hardware poke from the sand in silent reminder of pioneer radio's giant step.

The Barnstable Radio Club operators and guests were on the air at the site often 24 hours a day during Marconi Week, promising Duncan Kreamer W1GAY, the QSL manager, a busy time. Caswell was KM1CC's first radio contact on the 14th and its last on Sunday the 22nd.

Marconi's early pioneering made instant communications to the world's farthest corner not only possible, but practical. The Barnstable Radio Club operated 'CC once again as their way of saying thanks 75 years later.■

RTTY Loop

from page 20

return from subroutine (RTS [$39]). The PIA is on SWTPC port #7, which is $801C. The registers are thus at: $801C—data direction register A; $801C—peripheral register A; $801D—control register A; $801E—data direction register B; $801E—peripheral register B; $801F—control register B.

This program uses the B side of the PIA. Other possibilities can be worked out as long as the hardware is properly configured and initialization routines are modified appropriately.

Be bold in adjusting the value of the delay constant if you have a different clock frequency. Don't start by 480, 481, 482, etc., but by 480, 490, 4A0, etc., or more. When you get it within $10 or $20, then start fine tuning. Owners of the "fast" MP-A2 CPU boards can expect a number around $600, depending on their individual clock. Since the MITS 680 has a slower 500-kHz clock, I would expect the value to be reduced. I have not heard from anyone using such a machine, however.

Finally, we have found that some fast terminals appear to generate errors, as they put the data out and return, still during the last half of the fifth data pulse. It has become advisable to ensure that we are in the STOP pulse before starting to send anything to the terminal. Addition of a line, "00725 BSR MSEC10", will accomplish that delay. Of course, the program needs to be reassembled following that insertion.

An updated source listing, including the line added above, is available for the cost of copying. Please send one dollar and a business-sized SASE to me at the above address. Be sure to enclose a note to tell me what you want. You have no idea how frustrating it is to get money and an envelope with no explanations.

More excitement next month and yes to the many questions—additional programs *are* in the works.

Ham Help

I purchased a Robyn International Model TRS-100 23-channel CB (AM-SSB) for conversion to 10 SSB. I have not seen any articles on converting the TRS-100 to 10 SSB. Has this been done? We have the receiver working with a single crystal from International which puts us on ten, but the transmitter output is way down—less than 1/10 of a Watt. We tried writing to Robyn International, Box 478, Rockford MI 49341, for an alignment instruction book, but had no luck. Also, there are no "Sams" books for this transceiver. Does anyone have any suggestions?

R.J. Doherty K1VV
RFD #1, 14 Pine St.
Sandwich MA 02563

I've been a subscriber to *73* since its inception and have been sitting back enjoying years of reading enjoyment. I was disappointed when the magazine and the hobby turned so drastically towards computers, microprocessors, etc. I guess I yearn for the old days of home brewing. Frankly, I have gotten bitten, but only slightly—and there lies the problem. I have acquired a Viatron 21 data terminal. They were sold locally by Meshna in Lynn, Mass.; you had the ad in *73* a few years back.

I can get the thing to light up and print, but that's about as far as I can reason it out. I can't find anyone who has a manual or any information on the unit. I understand Ma Bell used them here in the MA area. Can anyone give me some help on this unit?

Lou Venturelli WA1NIX
64 Cross St.
Quincy MA 02169

We are in the process of reestablishing the Auburn University Amateur Radio Club after a four year period of inactivity. There is no equipment left over from the previous clubs here, and we will be starting from scratch in rebuilding.

We would like to know if anyone who attended Auburn and has knowledge of the club's activities in past years could contact us.

Robert A. Alexander WA4RRN
President, AUARC
James E. Foy Union
Auburn University
Auburn AL 36830

I need a simple modification for the Kenwood TR-7400A 2 meter rig in order to receive the national Civil Air Patrol repeater frequency of 148.15 MHz. (I can transmit by setting the dial at 144.500 and using a -600 offset to give an output frequency of 143.90, which is the repeater input frequency.) I have contacted Kenwood and they cannot help me.

George E. Taylor WA4GUW
209 Lakeshore Drive
Muscle Shoals AL 35660

Anyone who has converted an Alaron 1025-B AM CB is requested to contact me. Specifics, directions, and schematics would be appreciated.

Frederick Bartolomei WD8PCB
19442 Rockport Drive
Roseville MI 48066

I would like to contact any amateur who is using a computer for Morse or RTTY, to exchange ideas and information. Also, I'd like to contact anyone interested in computer-to-computer communications on the HF bands (such as program exchanges or 24-hour traffic nets on RTTY).

Barry W. Polley
6619 Southpoint
Dallas TX 75246

I need an instruction manual with schematic for the Tektronix 535A oscilloscope.

If anyone has a manual which is not for sale, I will pay for copying the manual and all postage. Any help along this line will be greatly appreciated.

Henry R. Leggette WB4MNW
1555 Galveston ST.
Memphis TN 38114

I need a schematic for the surplus BC-348R model military receiver. I also need advice regarding the installation of a product detector in the same radio.

Paul J. Uhlig, M.D. K9MD
1342 Estate Ct.
Wichita KS 67208

I am interested in contacting a ham in this area.

Albin J. Gietzen K3TUC
606 N. Ohio Ave.
Gaylord MI 49735

Good News!

—easy autoranging for your counter

Ted Lassagne
21853 Monte Ct.
Cupertino CA 95014

The frequency counter on your bench is a handy and useful instrument. But unless it's a high-priced one, you most likely have to operate the range switch by hand. Adding automatic range switching, or "autoranging," can make that counter much more convenient to use. The good news is that it can be done with just a handful of parts.

I originally started out to improve the range switch in my home-brew version of the popular K2OAW counter. The idea was to replace the two-position range switch with a four-position switch and eliminate the switch flipping necessary to get five-digit readings in the range between 100 kHz and 10 MHz.

The K2OAW counter range switch uses a scheme called dc switching. That is, the switch on the panel controls only dc voltages to gates which actually select the timebase frequencies. The high frequencies are kept away from the panel where they might cause a "noisy" situation.

Keeping the dc switching seemed like a good idea, so I put together the circuit shown in Fig. 1. The circuit uses a 74153 data selector/multiplexer (U1) to select the timebase frequency and a 74145 (U2) to indicate the range by positioning the decimal point on the display. Because the 74153 has two sections, it can be used as a two-pole "switch." The K2OAW counter control circuits use two timebase inputs, so both sections of the 74153 are used here. Only one of the sections would be necessary in most other types of timebase circuits. The timebase inputs to U1 (pins 3-6 and 10-13) come from the counter's timebase divider, which is usually a string of 7490s. The control lines labeled RS0 and RS1 were connected to a two-pole, four-position rotary switch wired to supply the proper dc voltages. The gate duration and the decimal point for each setting are shown in Fig. 1. The display *always* reads in kHz, so no range indicator lights other than the decimal point are necessary.

After wiring up this circuit and getting it working, the next logical step was to try to make the switch operate itself—that is, to add "autoranging"—provided that not too many ICs were required.

Now, the logic that you use to operate a range switch manually on a counter is not too complicated. When the overflow light goes on, you switch to a shorter gate period. When the left-hand digit (as you face the display) is zero, you use a longer gate period, unless it is already set for the maximum length. To put this logic into circuit form, we need a two-bit counter to control U1 and U2, and signals to let us know (1) when the overflow light goes on, and (2) when there is a zero in the left-hand digit.

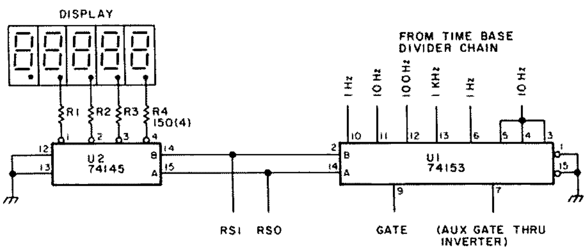

RS1/RS0	GATE DURATION	DISPLAY
00	1 SEC	XX.XXX
01	100 mS	XXX.XX
10	10 mS	XXXX.X
11	1 mS	XXXXX.

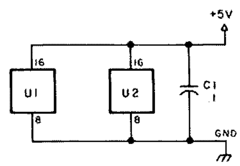

Fig. 1. Range-switching circuit.

The overflow is the easy one—there is an overflow latch already in practically all counter circuits. Detecting a zero in the left-hand digit is a little more of a problem. The cheapest way seemed to be an R-S flip-flop (made from two gates of a 7402) connected to the "A" output of the 7490 counter for that digit. The R-S flip-flop will latch high if the "A" output ever goes high in a count period, which means that there is *not* a zero in that digit. After every count period, we reset the R-S flip-flop using the counter reset pulse.

For the two-bit counter, we use a 7473 wired to stop on the count which represents the longest timebase interval (one second). It looks like we would need an up/down counter here, but we can avoid this kind of complication by being a bit devious on the logic. Instead of counting down one count when the gate period needs to be shortned, we merely reset to he shortest gate period nd let it count up two ounts. On the three hortest gate periods, the range switching is done very tenth of a second, so his simplified logic takes nly two tenths of a second onger, and keeps the umber of ICs down.

The autoranging control circuits are shown in Fig. 2. 3a and U3b are the R-S lip-flop which detects the ero/non-zero condition in the left-hand digit. At the start of each count period, the positive reset pulse sets the output of U3b low. During the count period, any positive input to U3a sets its output low and the output of U3b high. If the eft-hand digit is zero, the utput of U3b will stay ow, and when the counter strobe pulse arrives at U4a, a positive pulse will cause the count on U5 to advance, resulting in a longer gate period. If both Q outputs of U5 are high (i.e., the gate period is 1 second), the pulse has no effect.

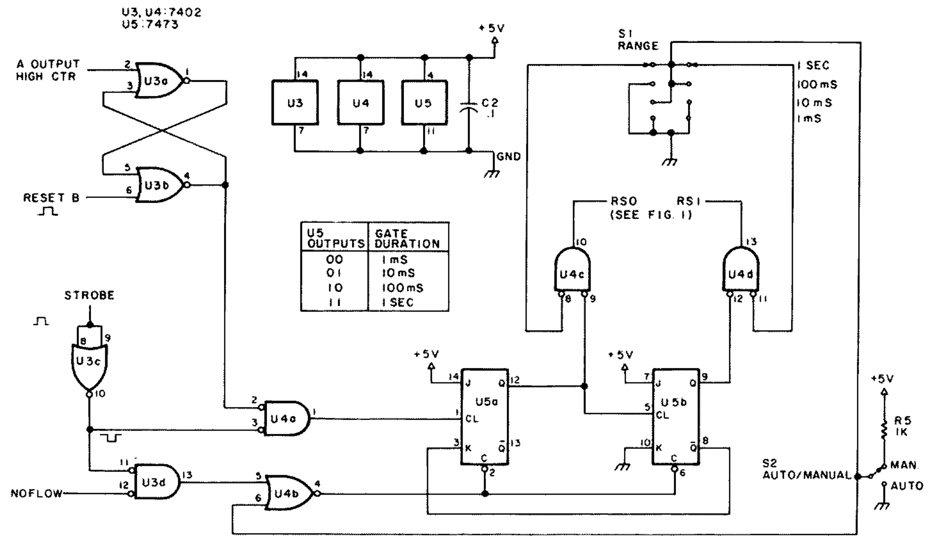

Fig. 2. Autoranging control circuits.

The overflow detection circuit uses U3d and U4b. The NOFLOW (high if no overflow) signal is from the $\overline{Q}$ output of the overflow latch (pin 8 of IC21A in the K2OAW counter), and is low when overflow has occurred. The strobe pulse gates a negative pulse to the C (clear) inputs of U5, causing the shortest gate period (1 ms) to be selected.

Selection of either the manual or autoranging mode is done with an SPDT switch. In the "manual" position, the output of U4b is held low, keeping the clear inputs of U5 low, causing both Q outputs to remain low. The panel switch voltages are gated through U4c and U4d (inverted) and control the range selection circuitry of Fig. 1. In the "autoranging" position, all the panel switch outputs are held at zero volts, which causes U4c and U4d to gate U5's Q outputs (inverted), which then control the range selection circuits. In addition, U4b acts as an inverting gate for the strobed overflow signal. If you are tempted to combine the autorange/manual switch with the range switch, don't. It's more useful to have them as separate controls.

One other change was made to the counter to add a "touch of class" and make the display more readable. The 7447 seven-segment decoder has a built-in feature to blank leading zeroes. There are two pins, called RBI (for Ripple Blanking Input) and RBO (for Ripple Blanking Output). If RBI is held low, a zero digit will be blanked out. If RBI is open or high, a zero digit will not be blanked. When a zero gets blanked, RBO for that digit is low; otherwise it is high. So, by holding RBI of the left-hand digit low and tying RBI of each of the other digits to RBO of the digit to its left, all leading zeroes can be blanked.

This poses one problem for a display with a moving decimal point. We don't want any blanks after the decimal point. The circuit of Fig. 3 provides the kind of display we want. The second and third digits from the right are "unblanked" if the decimal point is to their left or if any digits to their left are on. U6 handles the logic for this. The left-hand digit (RBI4) is tied to the overflow flip-flop to eliminate blanking when

	Connection	Pin	Of
Fig. 1	**Connection**	**Pin**	**Of**
	1 kHz	11	IC26
	100 Hz	11	IC27
	10 Hz	11	IC28
	1 Hz	11	IC29
	Gate	1	IC33a
	Aux Gate	4-5	IC32b
Fig. 2	A output high ctr	12	IC18
	Reset B	Coll.	Q5
	Strobe	Coll.	Q4
	Noflow	8	IC21
Fig. 3	RBI4	5	IC20
	RB04	4	IC20
	RBI3	5	IC17
	RB03	4	IC17
	RBI2	5	IC14
	RB02	4	IC14
	RBI1	5	IC11
	RBI0	5	IC8

Table 1. Connections to K2OAW counter (73, July, 1972).

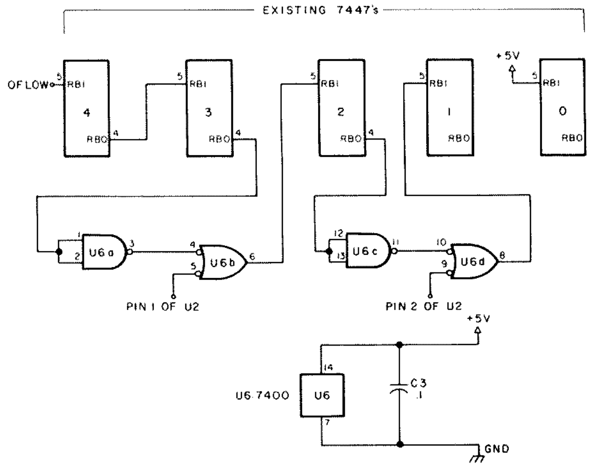

Fig. 3. Ripple blanking modifications.

Parts List

C1-C3	.1 μF, 10-volt bypass
R1-R4	150 Ohm, ¼ Watt
R5	1k Ohm, ¼ Watt
S1	2-pole, 4-position rotary switch
S2	SPDT toggle switch
U1	74153 data selector/multiplexer
U2	74145 BCD-to-decimal decoder/driver
U3, U4	7402 quad NOR gate
U5	7473 dual J-K flip-flop
U6	7400 quad NAND gate

overflow occurs; we don't want to blank anything in the lower half of a number. The right-hand digit's RBI (RBI0) is tied high so that the digit will always be displayed. That lets you know the counter is turned on and the display is working.

This whole project involved only the addition of six ICs, a few resistors and capacitors, and a rotary switch to the existing counter. The old range switch was used as the autorange/manual switch. The circuitry is not critical and a wire-wrapped version (interfaced with the K2OAW control circuit) works just fine. The new result is a much more convenient instrument on the bench. Most of the time it's "hands-off" operation. The overflow light never goes on, except to blink when the frequency increases suddenly.

Here are a few hints on operation: Most of the time you will want to use the autoranging mode. If you want to get more than five-digits resolution, set the range switch to the one-second gate and flip the autorange/manual switch back and forth to read the additional digits. If the frequency is varying around the upper end of a range—between 99 and 101 kHz, let's say—you probably will want to switch to manual temporarily. If a frequency less than 100 kHz is varying fairly rapidly and you want to track it, switch to manual and set the range switch to the 0.1-second gate position. The display will be updated 10 times a second instead of just once.

My experience with this improved counter has convinced me that it was well worth the small investment in time and parts to build in autoranging. Why not build it into your counter?■

Mighty Mods for the 820S

—more power and convenience

Photos by James R. Allison WA4KIL

Robert H. Walker K4FK
400 Tivoli Ave.
Coral Gables FL 33143

James R. Allison WA4KIL
14 Veragua Ave.
Coral Gables FL 33134

What! Buy a transceiver? No way! My reaction was short and definitive-sounding when one of the locals suggested that a new solid-state transceiver might be a logical replacement for my aging Collins S/Line. True, the S/Line had caused me a great deal of trouble over the past several years and I had been considering a replacement, but a transceiver? While it's intuitively clear that a transceiver is perfectly adequate, perhaps even desirable, for routine SSB operation, I use SSB about six times a year. I greatly prefer CW and RTTY, and we all know that a transceiver lacks the flexibility required by the serious user of those modes.

Nevertheless, within two weeks of first using the Kenwood TS-820S, I had purchased one, along with the companion VFO-820 and the YG-88C 500-Hz crystal filter. Obviously, the rig had impressed me!

Many operating hours and several modifications later, I am extremely pleased with the rig. But our initial encounter was rather tempestuous. When I first fired it up, the TS-820S receiver section was intermittent and the transmitter section was inoperative. Several of the internal connectors had vibrated loose from the circuit boards during shipping. Reconnecting them and then seating all of the remaining connectors with a small-bladed screwdriver effected the needed repair.

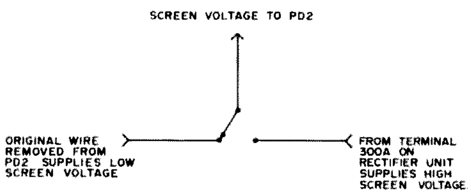

Fig. 1. Two levels of screen voltage—switch selected.

After several weeks of use, I had a pretty clear impression of the TS-820S. It proved to be an excellent SSB rig. I could think of no necessary improvements for that mode. It put out excellent CW and RTTY signals as well. But even with the outboard VFO-820 and digital readout, it lacked an easy method of zero beating a given frequency. It *can* be done, often very accurately, using the digital readout, but I found this to be both slow and psychologically unsettling. I like to hear the actual note rather than see the displayed difference between transmitter and receiver frequency, even though the latter is potentially more accurate.

Having become accustomed to the 250-Hz crystal filter in the Collins 75S-3, the 500-Hz filter in the TS-820S seemed wider than the proverbial barn door. Additionally, the Collins tunable bfo allowed centering a signal in the filter passband. On the TS-820S, the signal is off on the skirt of the filter, making the exact point of zero beat difficult to find.

I preferred the transmitter section of the TS-820S to my 32S-1. I wanted to keep my 75S-3, however, and modify the TS-820S for its role of main transmitter and auxiliary receiver.

The following modifications have proven reliable, easy to install, and, for me, they greatly heighten the pleasure of using the rig. While most operators probably won't want, or need, to install them all, there is something here for every taste:

- Increased power output
- Switch-selected bandpass in both the CW and FSK modes without resetting the mode switch
- Complete control of an outboard receiver
- Low-level spot signal for use with an outboard receiver
- Switch-selected FSK shift for RTTY
- "Key-lock" switch to eliminate the need for shorting the CW key during tune-up

Each modification can be installed independently with the exception of the control of an outboard receiver and the low-level spotting signal. These two use a common single relay.

Before tearing into your new TS-820S, you need to give some thought as to where you want to place some extra switches. Each

modification will require a miniature toggle switch to operate it. There are already twenty-nine front panel controls, so even if you are willing, the front panel is definitely not the spot!

WA4KIL uses his 820 as a portable and carries it back and forth to his weekend home in the Florida Keys. He didn't need all the modifications, just the selectable filters and FSK shift, so he found the rear panel to be a convenient location for his two switches.

At K4FK, no portable or mobile operation was contemplated, so I mounted four switches on an aluminum bracket that is suspended under the front panel. I used the front screws which fasten the bottom half of the case to hold the bracket in position. All leads going to the switches exit from the transceiver through the existing round hole in the bottom half of the case.

Other possibilities would be to mount the switches in a completely separate panel or to mount them toward the front of the upper half of the case. I would avoid the latter possibility because, aside from the necessity of drilling holes in the case, this arrangement places the switches in a rather inconvenient location for use.

Increased Power Output

Who couldn't use just a few more Watts output? I have experimented with three approaches to this. The easiest place to start is with your ac line voltage. The TS-820S power output is directly related to the "stiffness" of the ac source. One test transceiver put out 85 Watts at 14 MHz with 114 V ac and 100 Watts when the line voltage was raised to 120. If your line voltage is low, you might consider running your transceiver from a variac or autotransformer to keep the ac line voltage up around 120.

The second method of raising the power output was accidentally discovered. Being rather conservative, this is the method I have opted to retain in my 820. Late one evening, R6 on the rectifier unit opened completely. The schematic shows this to be a 470-Ohm resistor, while the one in my unit was marked 4700 Ohms. I lacked a replacement and installed a jumper across the open resistor to get the rig back in operation. This raised the screen voltage to around 230 volts, allowing me to load the final to between 230 and 250 mA. The power output runs from 100 to 115 Watts at 14 MHz.

While this modification raises the screen voltage on the 12BY7A driver tube as well, I have encountered no problems with overheating, instability, or premature component failure in either the driver or the final stages.

How about a few more Watts? The screens of the finals are fed from the internal 210-volt supply. By providing a toggle switch to connect them to the 300-volt supply instead, you can raise your power output to between 120 and 140 Watts at 14 MHz, depending on the ac line voltage.

Fig. 1 depicts this modification. You will need to disconnect the screen voltage source at PD2 on the final unit and run this lead to one side of an SPDT switch. The switch will allow you to select either 210 or 300 volts for the screens. Connect the switch's common to PD2. The other side of the switch will go to the 300-volt supply. Terminal 300A on the rectifier unit is a good source.

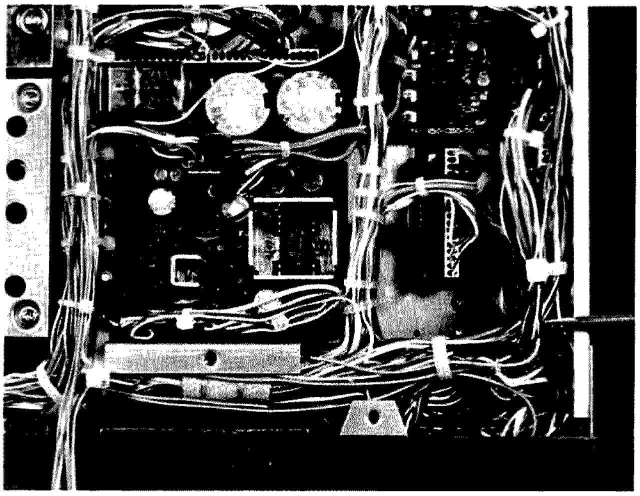

Fig. 2. The TS-820S viewed upside down with the front panel toward the bottom of the photograph. The screwdriver blade points out a convenient spot to break into the wiring harness for the selectable bandpass modification. The bundle of wires toward the lower left will eventually connect to the control panel.

The idling current on the final tubes will run considerably higher with the increased screen voltage, so it will be necessary to make one other change to allow the idling current to be set at its normal level. Short out resistor R25 on the rf unit. It is the 12k resistor located at the top of the board near the second connector. A solder bridge across the back of the board does the job nicely and can be easily removed if desired.

Readjust your idling current for 50 to 60 mA and you're ready to go. You can now load your TS-820S to between 275 and 300 mA of plate current, realizing greatly increased output power. The drive may have to be run a little higher as will both the mike gain and the compression. The rig has plenty of reserve to handle this, however.

You will notice that when you operate using the normal 210-volt screen supply, the increased bias will drop your idling current to approximately 20 mA. Experimentation has indicated that this produces no noticeable distortion or other operating difficulties despite moving the finals into a region somewhere in between Class AB_2 and Class B.

I discontinued using this approach because of the noticeable increase in operating temperature. No difficulties were experienced, but then I only ran the rig for a few days in this configuration.

With either of these approaches to raising the screen voltage, placing the mode switch in the FSK or tune position will continue to drop the screen voltage to normal levels for that mode. Thus, you will probably want to leave your screen switch in the 300-volt position most of the time.

Switch-Selected Bandpass on Receive for Both CW and RTTY

Without the optional YG-88C 500-Hz crystal filter, the TS-820S provides a bandwidth of 2400 Hz for SSB and FSK and an 1800-Hz bandpass for CW. These are automatically selected by the mode switch. With the optional filter installed, the mode switch automatically selects bandwidths of 2400

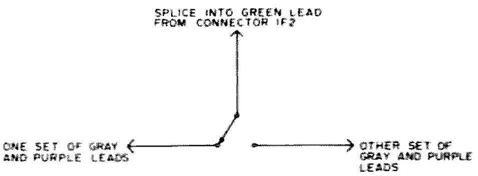

Fig. 3. Switch-selected bandpass in the CW and FSK modes.

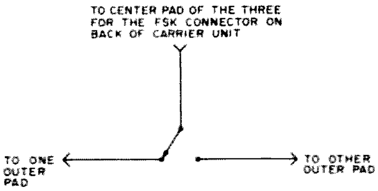

Fig. 4. This switching arrangement allows transmission of either 170- or 850-Hz shift for RTTY use.

Hz for SSB, 500 Hz for CW, and either 2400 or 500 Hz for RTTY. The latter is determined by the placement of an internal connector at the time the filter is installed. This modification will allow you much greater flexibility in selecting your bandpass when the mode switch is in either the CW or the FSK position.

To begin, locate connector IF2 on the lower section of the i-f unit. Three color-coded leads attach to this connector: one green, one purple, and one gray. Depending on where you plan to bring out your three leads for this modification, you may need to remove some of the tie-wraps on the wiring harness which runs alongside the i-f unit. The screwdriver blade in Fig. 2 shows one convenient spot to break into the harness.

Sever the gray and the purple leads. Solder each gray to the matching purple as indicated in Fig. 3. Each pair of gray and purple leads will attach to opposite poles of an SPDT switch. Splice the switch's common into the green lead.

Reinstall connector IF2 in position "B" (closest to the long connector). The mode switch will now continue to select 2400-Hz bandpass in either of the SSB positions. In the CW position, the added SPDT switch will select either 1800- or 500-Hz bandpass. And, in the FSK position, the switch will select either 2400- or 500-Hz bandpass.

Switch-Selected Shifts for RTTY

The TS-820S has proven to be an excellent RTTY rig. It has the limitation, however, of only being able to transmit one shift unless an internal connector is physically moved. Another SPDT switch can easily be used to give you the option of transmitting either of two shifts at will. From the factory, the 820 is set to give either a 170- or 850-Hz shift, but this is easily readjusted, should the need arise.

Locate the FSK connector on the back of the carrier unit. Remove the connector and retain it in case you ever want to return the rig to stock condition. Solder three leads to the circuit board pads associated with the connector. You can now select either shift by using your switch to short either of the outer pads to the inner pad. Fig. 4 depicts this modification.

Key-Lock Switch

When a key is plugged into the TS-820S for CW operation, you cannot tune up the final amplifier stage without closing the key. If your bug or keyer lacks some method of being shorted, tune-ups can be rather irritating, as only one hand is free to adjust the final controls unless you remove the CW key plug from the transceiver. Fig. 5 shows the addition of a key-lock switch which will allow you to lock your transceiver in the transmit mode.

Simply ground the hot side of your key jack through an SPST switch. The hot side of the key jack is the side which is farthest above ground. This modification will have no effect whatsoever when there is no plug in the key jack, nor will it operate unless the VOX is turned on or the send/rec switch is in the send position. This way, even when the switch is brought out to the front of the rig, there is little danger of inadvertently keying up the finals.

Low-Level Spotting Signal and Control of an Outboard Receiver

I have always marveled that while some transceiv-

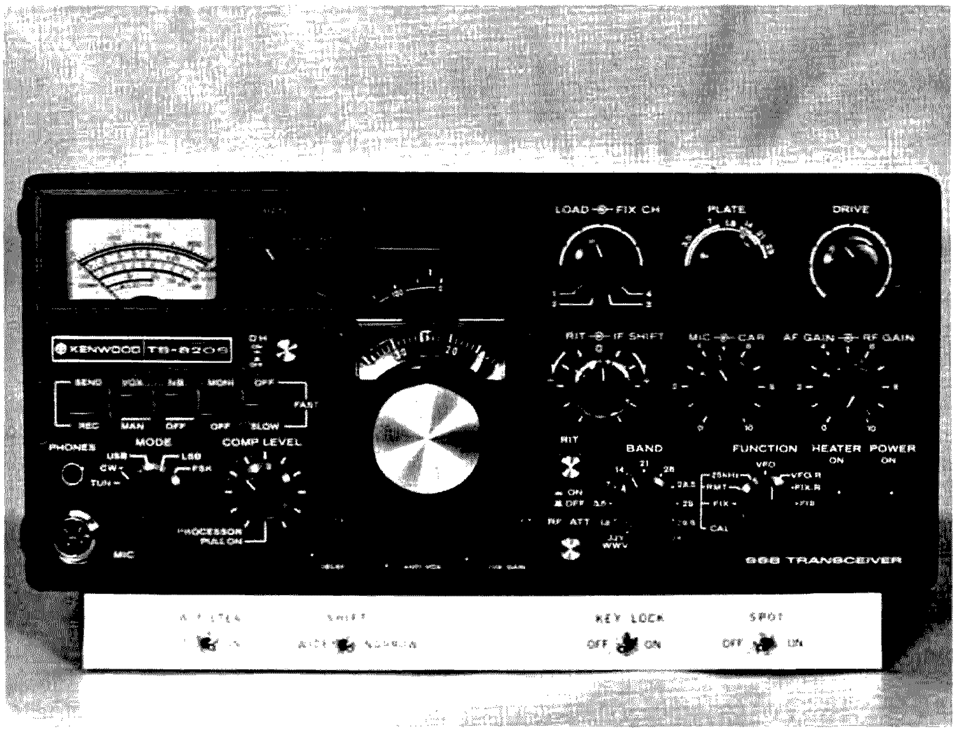

This prototype control panel was silver with black lettering. Future versions will be black-anodized, with white photoengraved lettering.

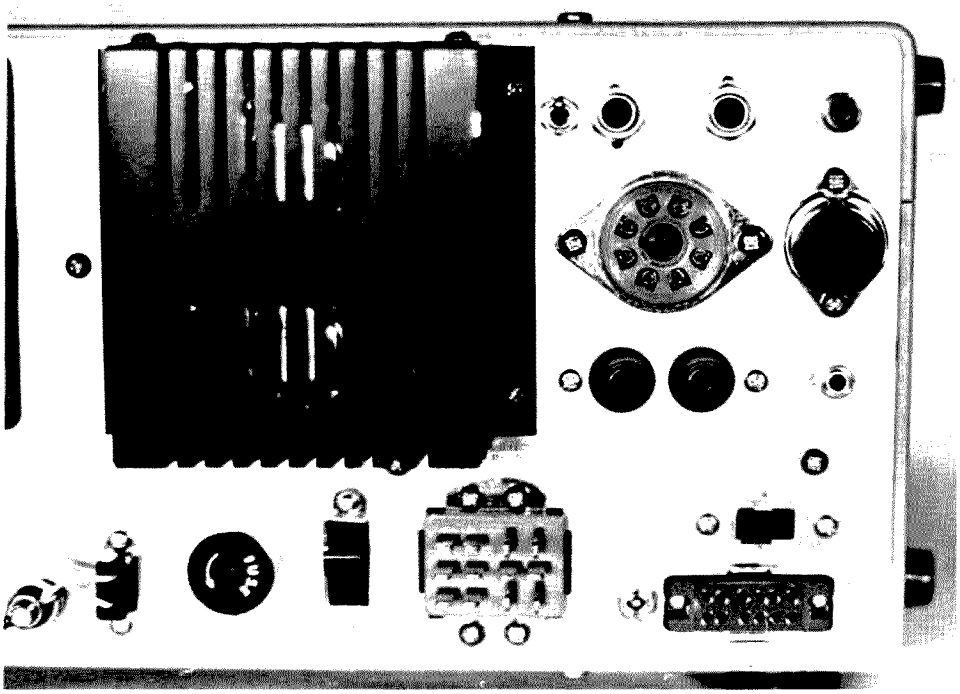

If your 820 gets carried around much, the rear panel may be a good place to add your switches. The upper toggle switch next to the RTTY key jack selects the CW and FSK bandpass. The lower one, next to the transverter connector, selects 170- or 850-Hz FSK shift.

ers make provision for the control of outboard receivers, few are equipped to generate a low-level spotting signal for use with such a receiver. The addition of this feature is the most extensive modification I have made to the TS-820S. For me, it has been one of the most useful and important.

I made the assumption that an operator who wanted to use an outboard HF receiver for added flexibility probably wouldn't be using one of the Kenwood VHF transverters. Accordingly, I used the transverter connector and one of the transverter phono jacks in this modification. The transverter-in jack remains unchanged, so this modification in no way affects your ability to calibrate the counter.

To accomplish both outboard receiver control and low-level spotting, four things must be done:

1. The outboard receiver must be muted while transmitting, but unmuted during receive and spot.
2. The TS-820S transmitter section must be brought up with the finals inoperative during spot.
3. The outboard receiver must be connected to the antenna in such a manner that it can never be connected to the transmitter section's rf output.
4. Both the CW key jack and the push-to-talk line must be grounded during spot.

All of these were accomplished through the use of a Potter and Brumfield R10-E1-X4-V185 relay. This is a 4PDT relay with a 12-volt dc coil. The last photo shows it nestled in the underside of the TS-820S chassis. It is sandwiched in between the marker unit, two wiring harnesses, and the metal shielding which surrounds the rectifier unit. If mobile operation is anticipated, a drop of epoxy cement will hold the relay firmly in place. At K4FK, the relay is seated tightly enough when sandwiched into position that no additional mounting is necessary. Fig. 6 shows the complete schematic for this modification.

The outboard receiver's antenna connection goes directly to the TS-820S transverter-in jack. Its muting connection goes to the TS-820S transverter-out jack. I disconnected the gray lead at pin 8 of the transverter connector and ran it to the added relay for use as the muting control for the Collins 75S-3. The S/Line receivers require their muting contacts to be grounded for operation and ungrounded for mute, but many receivers mute in exactly the opposite fashion from the S/Line. This type of receiver could probably be handled by adding your own lead to the normally open contacts of RL-2 rather than using the gray lead from the transverter connector. Additionally, pin 10 of your added 4PDT relay would have to remain ungrounded.

I retained a rather clever idea which Kenwood incorporates into the TS-820S. When the screen grid switch is in the off position, not only is the screen voltage disconnected from the final tubes, but negative bias is applied to the

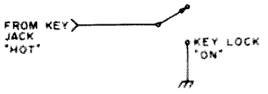

Fig. 5. Key-lock switch allows tuning the final amplifier without shorting the CW key.

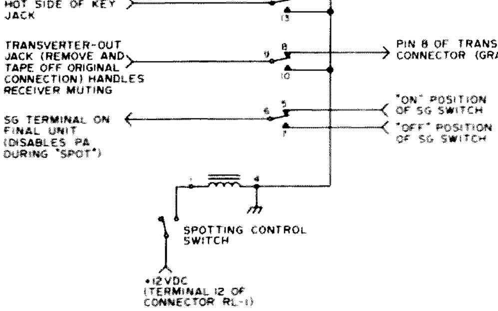

Fig. 6. Complete schematic for the control of an outboard receiver. Low-level spotting is included. The relay is a Potter and Brumfield R10-E1-X4-V185 4PDT with 12 V dc coil.

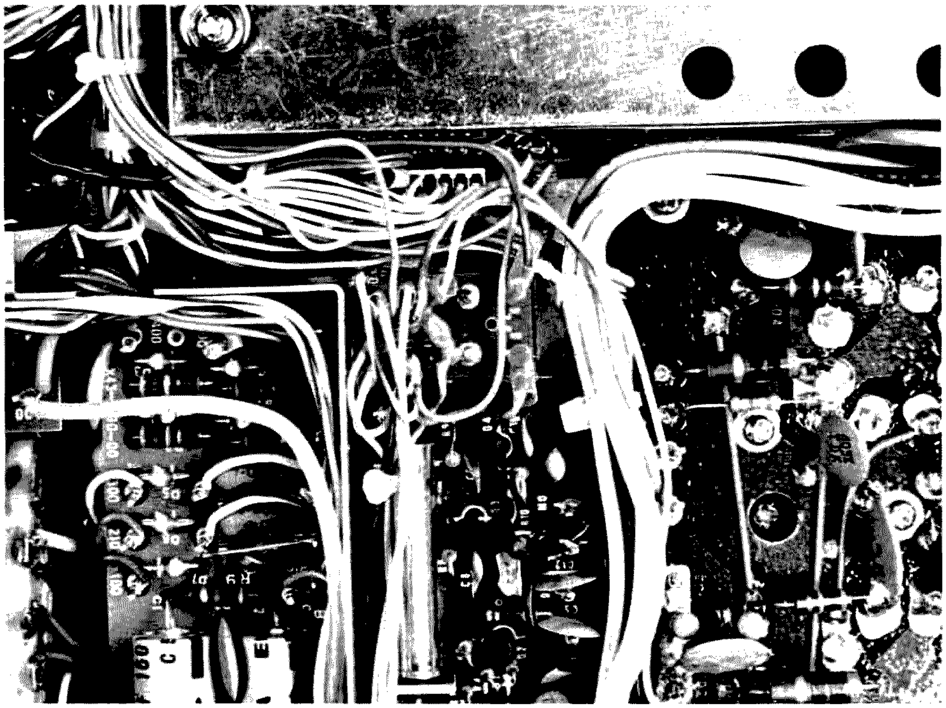

The TS-820S upside down with the rear panel toward the bottom of the photograph. The 4PDT Potter and Brumfield R10-E1-X4-V185 relay (center) fits as though Kenwood intended it to go there. The soldered connections on the circuit board next to the counter (upper center) are for the FSK shift modification. Also shown is the jumper across the open 4700-Ohm resistor on the rectifier unit (lower left).

screens. By retaining this feature, the spot signal will be more than strong enough for use with a local outboard receiver, but attenuated enough that others won't hear you zero-beat.

The Kenwood TS-820S is a generally satisfying rig to own and operate. It seems well constructed and has proved to be reliable. With the addition of these few simple modifications, it has become a truly versatile companion which should provide many hours of pleasure.

I have not attempted the modification of any other Kenwood gear, but according to the TS-820S Operation Manual, the factory-installed digital readout is the only difference between the TS-820 and the TS-820S. It seems likely, therefore, that these modifications should apply directly to both versions. ■

R. C. Cable WA6TLK
5218B E. Nugget
Beale CA 95903

Improving Heath's HT

—a half-dozen swell mods

Unit ready for external PTT and private listening. Heath microphone element had been installed in the Motorola housing to keep the system matched.

Although it's an excellent two meter receiver/transmitter, the Heathkit HW-2021 HT, I felt, could be made far more versatile through the employment of a few minor modifications. This article will describe some of the many modifications possible with this unit. Listed are those which I have performed on my HT:

1. The installation of a BNC-type antenna connector in place of the 5/16" threaded bushing.
2. The use of the external antenna connector for an external earphone/speaker jack.
3. The use of RG-174 coaxial cable for the rf lead and the rerouting of the wiring to get rid of the rat's nest of interconnecting wires between case halves.
4. The installation of a push-to-talk (PTT) relay.
5. The addition of a ±600 kHz crystal and crystal switch.
6. The addition of extra heat sinks to the rf transistors.

Some of these modifications came about while assembling the rig, others from on-the-air use, and still others because of component failures. I'll start with the first group — those changes carried out while the kit was under construction.

The first change consisted of installing a BNC-type antenna connector in place of the 5/16" threaded bushing supplied. I used the Amphenol K-79-106 connector for this mod. I chose this particular connector because it has a slightly longer threaded shank which allowed the soldering eyelet to extend into the case for easy soldering. Some care must be exercised with this simple but useful modification.

A problem arose, for me at least, in that there is only half of a hole in which to install the connector. This, of course, is due to the fact that the connector and all of the operating controls — channel switch, squelch, and on/off/volume — are mounted on the centerline along the top of the unit where the case separates into two halves. The solution I found was actually a compromise. In place of the lock washer supplied with the connector, I installed the largest flat washer I had in my hardware stock that would fit the threaded portion of the connector snugly. This allowed me to tighten down the nut and squeeze the edge of the hole between the washer and the flange on the connector. However, upon bearing down on the nut to get a secure installation, the washer cocked slightly toward the top of the unit. This then prevented the case front from being installed properly. To get around this, I used a fairly sharp pocket knife to shave away a small amount of the plastic case along the inside edge of the connector hole in the speaker/mike half of the case. The case is thermoplastic, and, with a little trial and error, a good fit of the two case halves was possible.

Once this modification had been accomplished, the next one was logical — the use of the external antenna

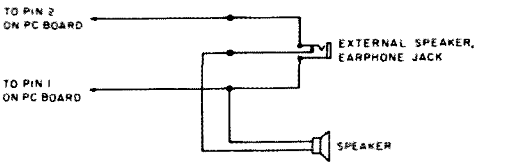

Fig. 1. External speaker/earphone hookup using the external antenna jack.

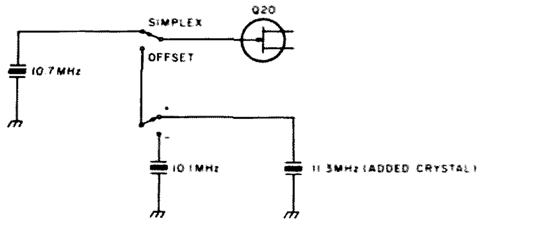

Fig. 2. Schematic of the offset oscillator with the addition of an 11.3 MHz crystal, giving a ±600 kHz offset option.

jack as an external speaker/earphone jack. (See Fig. 1.) This comes in handy when I am using the unit, in conjunction with a trunk-mounted 5/8 whip, as my mobile rig. I can carry on a QSO or monitor the local repeaters without bothering the spouse with the constant chitchat and squelch tails that fill the Toyota. Of course, when alone, I use the speaker attached to the broadcast receiver installed in the car. Here I simply added two wires directly across the vehicle's speaker, brought them out to the appropriate length, and added a miniature phone plug. No switching between the broadcast receiver and HT is employed, and no adverse results have been noted.

Not using this jack for its intended purpose added greatly to the next change I felt was in line. This was the reduction of the rat's nest of wire that resulted when it came time to mate the two case halves. Originally, to close the unit, a total of ten separate connections had to be made. By eliminating the external antenna jack function from the front side of the case, four of these connections were removed. Also, if you use miniature shielded cable for the microphone connections, no coax will be connected to the front side of the case. This results in a small bundle of wires connecting the case halves. This bundle, when laced together, gives better access to the internal workings of the unit and makes it far easier to separate and mate the two case halves. I, however, used RG-174 coaxial cable for my mike connections, not having any small shielded audio cable at the time of assembly. This type of coax was also used to connect the BNC connector to the circuit board. I found it far easier to work with than that supplied by Heath with no adverse results.

This brings me to the next group of modifications, those which resulted from actual use of the unit. The first was the addition of a plus or minus 600 kHz function to the HT. The crystal supplied with the unit allows for only a minus 600 kHz offset of the transmit frequency. This is accomplished by pushing down the offset switch on the left side of the unit. By doing this, you are selecting a 10.1 MHz crystal and disconnecting the 10.7 MHz crystal used for direct or simplex operation. By selecting this 10.1 MHz crystal, you are lowering the offset oscillator frequency by 600 kHz. This oscillator, in turn, supplies one of the two signals that go to the transmitter mixer, Q21. If this frequency is raised or lowered, the transmitter frequency is raised or lowered a like amount. Thus, to gain a plus 600 kHz offset, an 11.3 MHz crystal is required. These can be acquired from any crystal manufacturer for around $10. But how do you select one of three crystals using a switch having only two positions?

I did this by getting rid of the switch. In place of the offset switch provided with the unit, I installed two SPDT subminiature switches, Electrocraft 35-202. These switches fit nicely into the retaining slots provided for the original switch, but, as usual, all was not well. I found the slot for the original switch to be too long to hold the smaller replacements firmly and too shallow to allow the case halves to be mated with the switches in place. The first problem was solved by sliding into the spaces at each end of the switches small pieces of metal cut from the shanks of two small ground lugs. The second problem was solved by filing the hole larger. Being soft thermoplastic, this took a small amount of effort, and the bottom of the hole was soon even with the PC board. The tab on the front half of the case also had to be filed down even with the case edge. This took care of the switch mounting problems.

Mounting the crystal came next. This was no real problem at all, for, with the larger original offset switch removed, adequate room was gained to allow the crystal to be mounted next to the new switches. First, two small holes were drilled through the PC board for the crystal pins. Since one side of the crystal went to ground, one hole was drilled just large enough for the pin to fit and the pin was then soldered to the PC board. I was able to do this because the area in which the crystal is installed is a fairly large ground pad and no extra wiring was needed. The hole for the other crystal pin was enlarged to ensure the pin did not come into contact with the foil on either side of the board. To this pin was soldered a short piece of small-gauge wire which in turn was routed up to the component side of the board through a small hole drilled for that purpose. This wire was then connected to the new ±600 kHz switch.

After these changes were made, I had two small switches on the left side of the HT in place of the one larger switch — one to select simplex or offset and the other for either +600 kHz or -600 kHz. I chose to have the

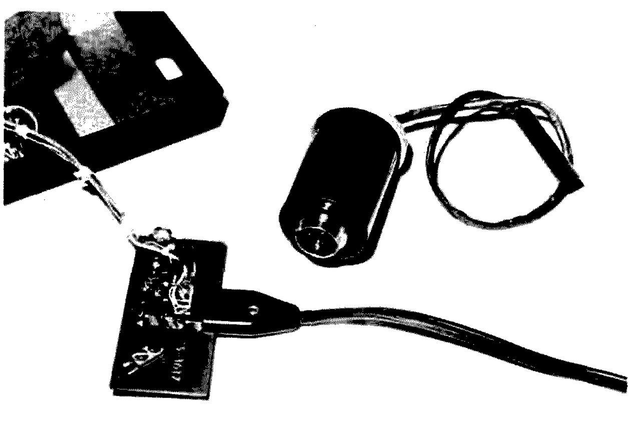

The external microphone adapter mentioned in the text and the SPST switch added to the battery charger board. The notched battery charger connector is plugged in, showing how the notch keeps the switch from functioning during battery charging.

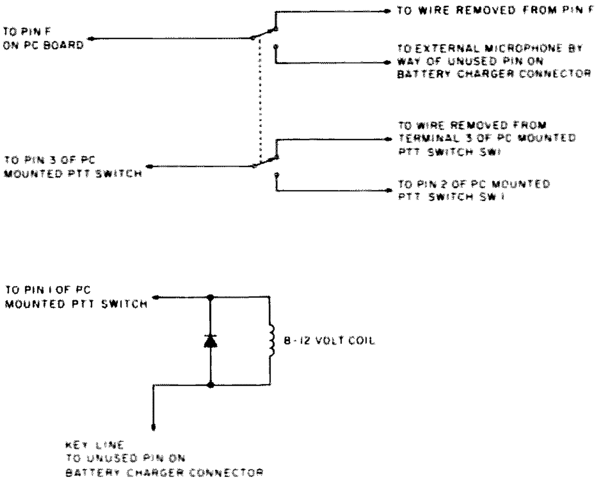

Fig. 3. The PTT schematic. The diode across the relay coil can be any silicon diode, such as a 1N457.

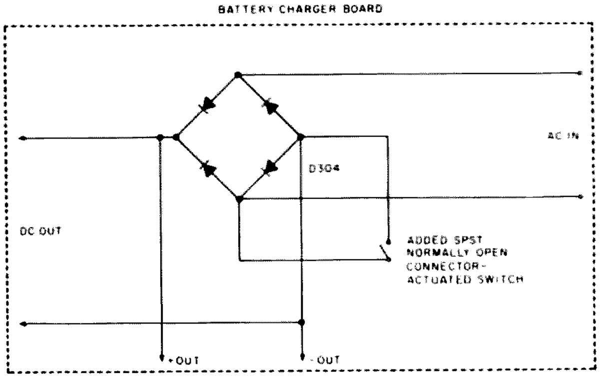

Fig. 4. Schematic of battery charger with the adapter actuated SPST normally-open switch connected across D304.

switch toward the back of the unit the simplex/offset switch with the down position being the offset position and up being for simplex. The front switch then became the ±600 kHz switch, with the +600 kHz being the up position and the -600 kHz being the down position. The hookup for the switches is shown in Fig. 2.

The next modification (PTT) came about for two reasons. One was that I use this unit as an HT, home QTH rig, and for my mobile rig. In other words, it is my one and only two meter rig and I got tired of having to pick up the entire radio each time I wanted to say something. This was awkward due to the size of the thing (it gets heavy after a few exchanges) and the trailing external antenna and speaker cables. The other reason was that I wanted to see if it could be done with no major rewiring of the rig.

The first problem was how to connect a microphone with a PTT switch to the internal workings of the rig. This was done by using the two extra pins on the battery charger connector on the rear of the set. One became audio in, one the PTT key line, and then I ran out of pins. To get around this and still not have to add another connector to the rig, which was one of my aims, I borrowed one of the battery charging pins open when the unit is being used with the external microphone. To do this required the addition of a simple SPST normally-open switch to the battery charger board in the bottom of the HT. This switch, when actuated by plugging in the microphone adapter, shorts out D304 in the battery charging circuit, thus giving me a third wire for the ground return needed for the PTT relay and the shield of the mike cable. This is shown in Fig. 4. To prevent this switch from being actuated when the batteries are being charged, a notch was cut in the corner of the battery charger connector to keep it from coming into contact with the switch mechanism. The switch itself came from a relay in the junk box. A microswitch would do, as well as any number of other switches.

Once these mechanical problems were overcome, the modification to the electronic portion of the unit was no major undertaking. First a small DPDT 12-volt dc relay was selected to do the switching. The relay shown was used because I could not find a subminiature relay that I could mount directly on the PC board and because I had a dozen of them in the junk box. This relay drew about 35 mA at 12 volts, so I felt it would not greatly add to the battery drain. The next step was to find a place and means to mount the relay. I chose not to mount the relay at all. Instead, the relay is held in place by the seven wires soldered to its terminals and by the pressure of a piece of foam rubber I added to the front of the unit. This foam keeps the relay in place and also keeps the battery pack from rattling. The location of the relay was chosen, as shown, so that it would be close to the audio input terminals on the PC board and because it sat nicely on top of coils L1 and L22.

Now, to switch this rig from receive to transmit using an external PTT switch, two requirements have to be met: Twelve volts must be switched from the receiver to the transmitter, and the microphone input pin F on the PC board has to be switched from the internal mike to the external mike. The internal microphone must be disconnected to prevent it from picking up extemporaneous audio and to prevent the input impedance of the audio amplifier from being upset by having two microphones connected to it in parallel.

As I said, this rewiring was not a major undertaking. I started with the +12 volts switching. First I removed the lead connecting the PC board to terminal 3 of the PC board-mounted PTT switch,

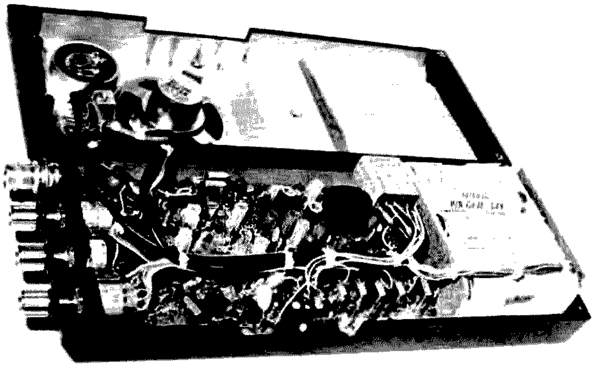

Overall view of most of the changes. The BNC antenna connector, two new offset oscillator switches and crystal, reduced tangle of interconnecting wires, the double heat sink on Q26 (round black object in center) with the two aluminum tubing heat sinks on Q24 and 25 to the left of Q26, and the PTT relay to the right of Q26.

SW1. To this lead, I connected a wire leading to one of the normally-closed contacts of the new PTT relay. From terminal 3 of the PTT switch, I ran a wire to the arm of the same relay half. This left the normally-open pin of the relay, which was then connected to terminal 2 of the board-mounted PTT switch. That completed the dc switching change. Now when the relay is energized, the dc to the receiver is interrupted and switched to the transmitter. When not in use, the relay just sits there and the board-mounted PTT switch does the work.

The audio wiring changes were equally as simple. First I disconnected the audio cable going to pin F on the PC board. A short piece of wire was then used to connect pin F to the unused relay wiper arm. To the normally-closed contact of this half of the relay, I connected the internal microphone cable. These two connections were made using the extra wire connector pins and sockets supplied with the kit. Finally, a small shielded cable was connected to the last unused normally-open contact of the PTT relay. This is the side that goes to one of the unused pins on the battery charger connector and carries the external microphone audio into the unit. One end of the shield on this cable was connected to pin Y (ground) on the PC board, and the other end was connected to the negative (-) battery terminal on the battery charger PC board.

I would like to mention that just about any microphone will work as an external microphone, but, to keep everything matched as Heath did, I ordered a replacement element and installed it in my microphone housing. Before doing this, I would get reports of being too tinny or too bassy from the local group. But now there is no difference between the internal and external audio quality using the Heath element.

As for wiring, all that was left then was to hook up the supply voltage and control line for the PTT relay. The +12 volts for the relay coil was obtained by running a wire from pin 1 of the PC board PTT switch to one side of the relay coil. The key line from the other side of the relay coil was then routed, along with the existing battery wires and the new microphone input cable, to the battery charger connector where it was connected to the last unused pin. To provide clearance for these new wires, which must run over the battery charger holder, a small notch was cut in the top of each end of the holder. Also, a kickback diode should be connected across the relay coil. I placed mine physically on the battery charger board, connecting it from the PTT key line to the + terminal on the board. This had the same effect as putting the diode directly on the relay but saved me the hassle of soldering in a crowded area. Be sure to watch the polarity with the cathode going to the + terminal. The relay hookup is shown in Fig. 3. This PTT scheme has now been used for over eight months with no problems encountered. However, other problems have developed, and this brings me to the last modification, which actually is an addition.

From the time I first got the rig on the air, it seemed to me that transistors Q24, 25, and 26 ran unreasonably hot. However, a check of another 2021 showed the same conditions, so it was considered normal. Right after this check, however, the HT used for comparison failed and Heath resolved the problem by replacing Q24 and 25. This made me wonder if indeed this was a normal condition. My suspicions were further aroused when Q25 in my rig failed due to a collector-to-base short. To me, this meant something was not right. After replacing Q25 and checking all voltages and currents, I decided that heat was my villain.

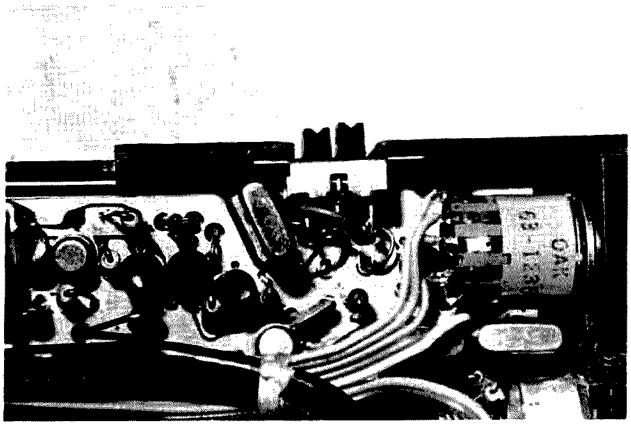

Close-up of the added 11.3 MHz crystal and two new slide switches. Only one piece of wire was added; all other leads are those disconnected from the original offset switch.

Q26 is provided with a slip-on round heat sink, while Q24 and 25 are on their own as far as heat dissipation is concerned. To try to cool down Q26, the power amplifier transistor, I first obtained from Heath another heat sink like the one supplied with the kit, part number 215-45, at a cost of 55¢. I then bent inward the portion of the heat sink that normally fits onto the transistor body until it was small enough to fit inside of the top of the installed heat sink. Then a liberal amount of silicone transistor grease was used to fill any gaps, and the two heat sinks were pressed together. This addition effectively doubled the cooling capacity available. That took care of Q26.

Q24 and 25 were a little more difficult, and, again, a compromise had to be accepted. First, I tried some store-bought TO-18 slip-on finned heat sinks, but these two transistors are surrounded by coils and resistors and the fins were always hitting something. I then tried some home-brew finned heat sinks, but they wouldn't stay in place and again were too close to the other components for comfort.

I then hit on the idea of using some thick-walled aluminum tubing as a simple slip-on heat sink. They aren't finned or in any fancy shape,

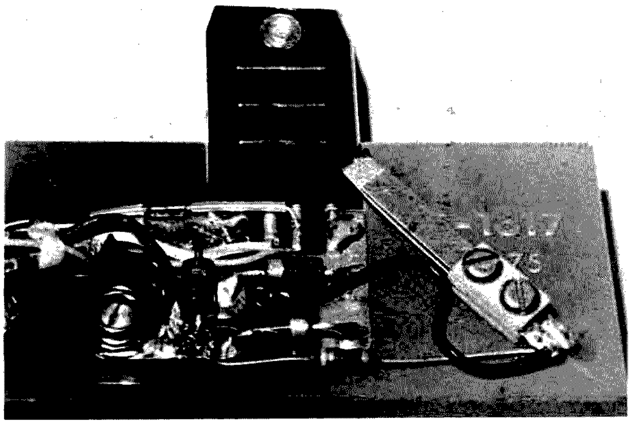

Close-up of SPST switch added to charger board with external microphone adapter plugged in actuating the switch, shorting out D304. Resistor shown was for test purposes only.

but they do conduct heat well and that is what I was after. The tubing I used had been a one-inch-long spacer that had been stripped from some piece of equipment some time ago. First, using the appropriate size drill bit, I slowly enlarged the hole in each end of the spacer until it would fit about 9/10 of the way over the transistors. I then cut the spacer in half and painted the two pieces flat black.

Again using silicone grease to increase conduction and to act as a lubricant, I lightly taped the heat sinks onto the two transistors. For the purists, these pieces of tubing will change the tuning of the collector circuits since the collectors of these transistors are connected to the metal cases of the transistors. But I found it to be such a small change that it wasn't worth bothering with. Possibly if the lengths of tubing were made longer, problems could develop, but these half-inch sections don't seem to create any electrical degradation and do carry away some of the heat. I don't know what their thermal resistance is or their dissipation capacity, but I haven't had a transistor failure since I installed them, so I feel they have solved the problem.

That sums up the changes I have made to my HT. I have several others in the long-range planning stage, such as a synthesizer and channel scanner, but these are going to take time to complete. With this rig, any number of additions can be made easily. The circuitry is not complex and plenty of room is available for several additions to fit into the case. So, if you have an HW-2021 and think it could be a bit more versatile, make a few changes and enjoy your rig that much more. ■

LETTERS

from page 12

was happy about my attempts to help a bona fide emergency group.

Hams should wake up. People are entitled to good communications, better than CB. If amateurs want to fight movements in the GMRS area, they can kiss public support of our hobby good-bye. Radio amateurs should understand we are very lucky to have our frequencies and our hobby. Our knowledge should be shared with the community, not locked away in the ham shack.

Since January, the license was granted and the repeater was put on the air. But I lost many friends and associates who thought I had "sold out" ham radio. To replace those crusty hams, I have gained new relationships with the GMRS users, including a doctor, lawyer, and several emergency medical technicians. These are not your typical die-hard 27-MHz users.

I could care less what happens at the WARC, as long as GMRS frequencies remain intact. Radio amateurs are turning a hobby into a professional lifestyle, with expensive equipment, linears, and towers. Let's remember the fun and excitement of a breadboard and inverted vee on the Novice band.

Many hams should consider whether or not to help groups trying to start a GMRS repeater. Like WA4EOX points out, if a two meter club operates a Class A repeater, non-hams can join in the fun without worrying about a license. Superior public service can be provided on these currently semiprivate frequencies.

Only thing that is needed now is a national coordination of these frequencies on the GMRS band, so citizens can use repeaters in other communities. I hope people don't think I'm down on ham radio. I enjoy DXing and "radio scouting," but I don't enjoy defensive VHFers worried about someone else using a repeater 300 MHz away.

Dave Sweigert WB9VKO
Fort Wayne IN

THE CHOSEN FEW

I am one of your avid readers and enjoy *73 Magazine* very much. In reading your editorials, I find them in the most part very informative, but somewhat biased.

I cannot understand what your hangup is against CBers, but it is chronic. I have to agree that the 10 meter band is being unduly penalized by the FCC. I feel they are going about it the wrong way; it seems it's like cutting off the child's thumb because he sucks it.

Now, back to the problem of CB versus amateur radio, unless things have changed since I have written you this letter. There are bad manners and ratchet jaws like you wouldn't believe—try any city 2 meter band. As for insolence and bad manners, just try a net check-in. I am ashamed to say it, but some of those so-called chosen ones think they are Moses leading us all to greener pastures. I realize that the CB is the stepchild. The reason for this is the FCC failure in general and the hams' stuffiness, let's face it! When CB becomes full-grown and has been around as long as amateur radio, there is no telling what may happen.

They are both needed in this day and age; we should all work together for a more solid understanding—help one another, not sit back and look down our noses and back-stab each other. Amateur radio has its place for the long calls, hobby activities, and help in emergencies, but so does the CB on the local scene—highway information, help for a stranded lady with a flat tire, and the good work of the REACT group. The Highway Patrol has had more help from the CBers than the hams, and we all know it.

The radio is a part of life that is here to stay, so let us all use it and its aspects fo form a common bond to help all mankind, not have a private hassle on who should and who should not.

I will now get off the soapbox and let you have it back. I hope you will use your influence to help both phases of our freedom of speech, and channel it to the benefit of all.

I do hope you will print this, as It is about time we took a long look at ourselves.

I am in the process of getting my ham ticket so I may enjoy the *best* of both modes.

Jim Foust
Liberty MO

CONGRATULATIONS

In regard to the recent string of letters you've published taking you to task for your magazine's contents, "Let me say this about that": I know the substance of a radio magazine should be radio and not flying or computers or butterfly collecting. But I always enjoyed your dad's column on "ancient" aviating, and I think it's more than coincidence. It seems to me that flying and amateur radio are related in that they both have to do with a highly technical area of proficiency—it should be no accident that a pilot/ham is likely to be one and the same person. In spite of what you think of the FCC, It has always seemed to me that the FAA and the FCC are a large cut above the usual bureaucracy, and it is for the same reason in each case: They deal in an area of technical expertise, not merely in the administration of pork-barrel projects. I think it's not merely coincidence that *World Radio News* carries a regular feature about flying and amateur radio, while not bothering to focus on amateur radio in butterfly collecting.

For myself, I haven't any use for the myriad of computer articles I see In your book, but with more than 200 pages to the issue, I can skip over 90 percent of the contents and still get my money's worth.

As for the materials on beating the cops, etc., let me commend you on a public service of true professional journalism. Lesser publishers would just be interested in keeping their subscribers happy. Your approach to exposing the wrongs in government and government-sponsored private monopolies like the telephone system represents the highest calling of constitutionally-protected free speech. The alternative to publishing is to let things smolder until they really get so bad as to erupt into open revolution. That's the theory of a free press—that we may constantly keep our eye on things and hopefully thereby keep the society on an even

Continued on page 118

Total Control

—a versatile TT system

Fig. 1. 1 + 3 digit controller.

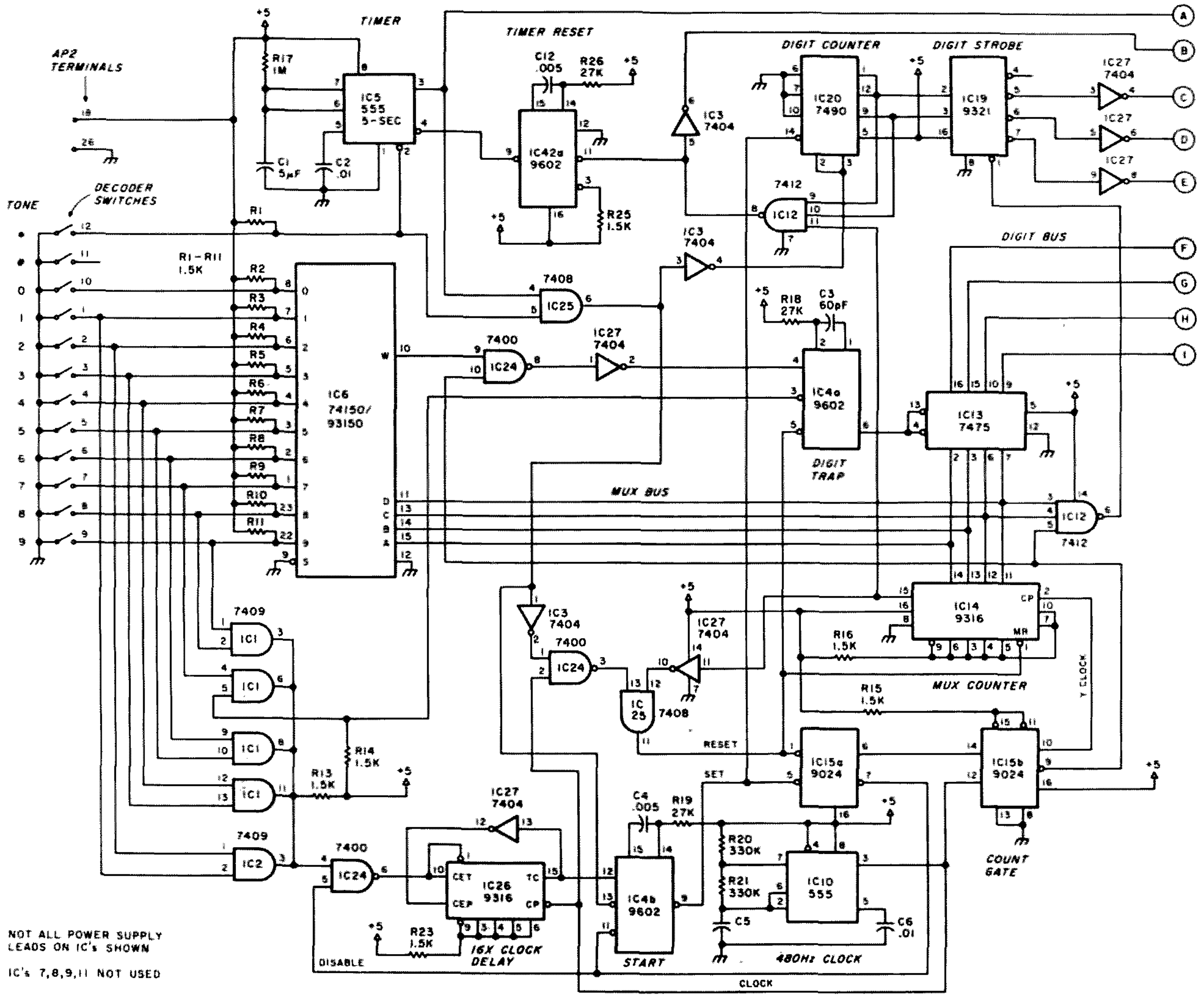

Anthony Sperduti WB2MPZ
4740 Newton Rd.
Hamburg NY 14075

This system was designed to control the Buffalo (Orchard Park) 2 meter Navmarcormars repeater. It can really be used for the control of just about anything you want. All that is needed is the input switching, which could also be push-buttons for local control. What it is on our system is relays from a touchtone™ decoder.

To operate, you must first close the * switch; you then have 5 seconds to complete 3 more contact closures. Each digit has a set time of 100 ms to register. It is necessary to hold each switch closed for at least 75 ms to insure that the scanner sees the contact closed. After the third digit has been scanned, you will get a pulse out of the controller. This time can be adjusted to your liking by changing the clock frequency. All timing in the controller is controlled by this clock. To speed it up, just speed up the clock; to slow it down, slow the clock. The input switch must be active for 16 clock pulses before it is acknowledged. The pulse out of the controller can be used to set or reset a flip-flop that can turn on or off a driver that can be used to pick up a low-voltage relay or operate any device you want to interface it to. The 0-switch is not used, as this is a so-called fail-safe feature. If the scan is started and you let go of the button too soon, a 0 is sent to the 7442 of that digit. Now, via a three-input NAND gate, you will inhibit IC25, which passes the control pulse. This ensures that you always get 3 valid digits before an operation can occur.

The 555 timer, IC10, is the main clock of the controller. It just runs at 480 Hz as long as the power supply is turned on. The 480 Hz pulses cannot get through the 9024 IC15B gate, so the 9316 IC14 BCD counter is not counting. Also note that the 555 five-second timer, IC5, is holding the 7490 digit counter at zero via IC25 and IC3, pin 4. It also inhibits the 9602 IC4B one-shot from passing any false start pulses and holds the 9316 IC14 mux bus driver to zero via IC3, 24 and 24, pin 11. When the * switch is closed, the output #3 of timer #1 goes high for five seconds or as long as the *

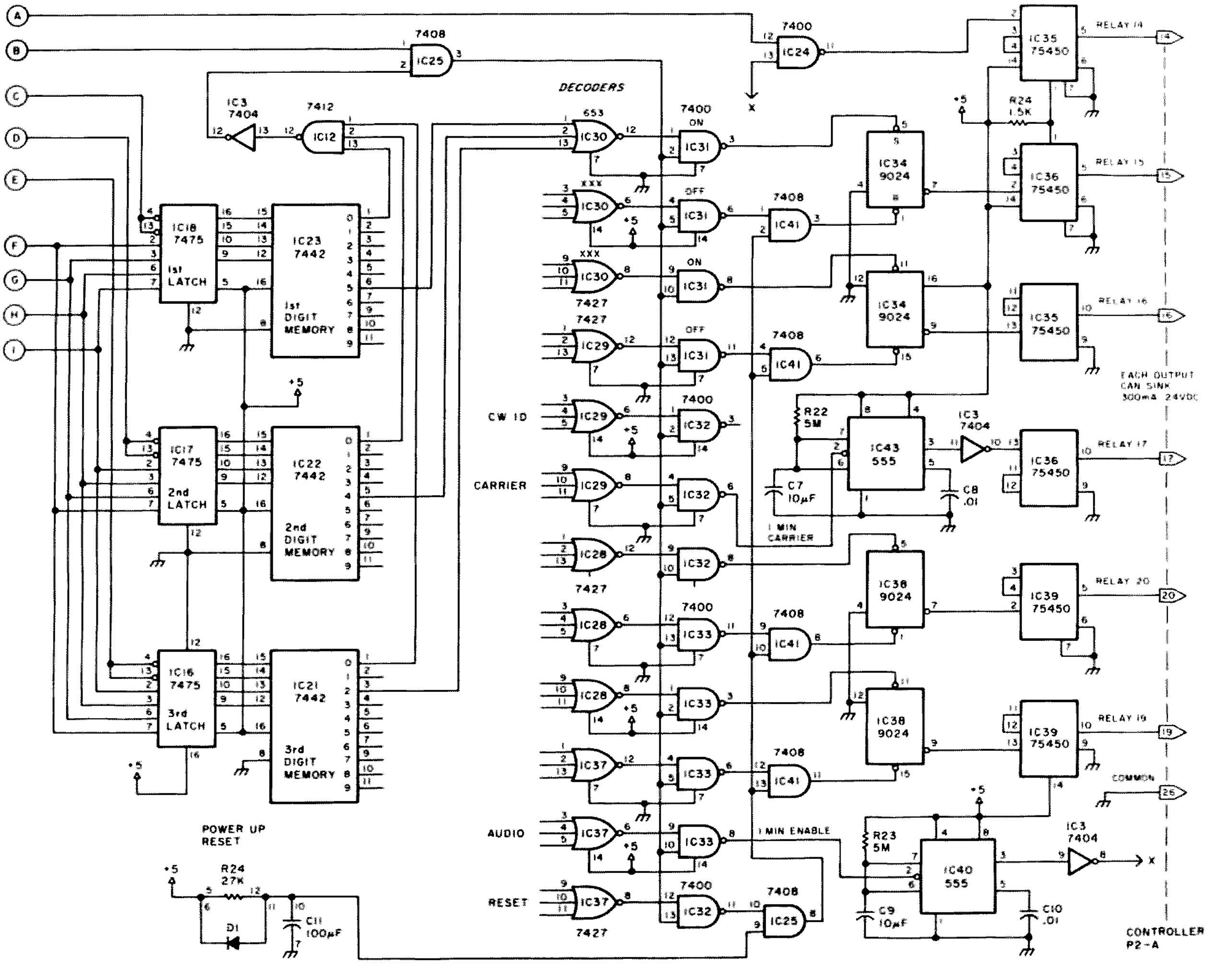

switch is closed. The audio-off relay is picked up via pins 9 and 8 of IC3 and shorts out the receiver audio line so that the tones will not be transmitted. As soon as the * switch is released, the resets are lifted on the digit counter, IC20, and the mux bus driver, IC14. The 4B one-shot is also enabled. Note that the 9316 IC26 counter is used for a delay circuit.

On my first attempt to build the controller, I did not filter the input lines. I was going to put a filter on all the lines, but this turned out to be much better. Now the clock pulses, 480 Hz from pin 3 of IC10, cannot upcount the 9316, as IC24 is holding the rest line, pin 1, low via IC24. Both inputs to this gate are high. Now, when one of the input switches is closed, one of the inputs will go low via the OR logic gates, IC1 and 2. The clock pulses will start upcounting the counter.

If at any time you open the input switch before you count 16 pulses, that input will be disregarded. If the switch stays closed for at least 16 clock pulses (33 ms), the counter's toggle output, pin 15, will go high, lock out the counter from counting anymore, allow the 9602 IC4B one-shot to pulse the IC20 digit counter so that there is a binary one on its output (pin 12 high), and also toggle the 9204 flip-flop, IC15A. This first allows the main clock pulses to get through the IC15B flip-flop and cause the 9316 IC14 counter to start counting. It also feeds back on pin 7 to lock out the one-shot, 4B, from sending any more counts and locks out IC24 from passing any more switch contacts or bounces for starting up the filter counter again. The controller now locks out the input line until it scans all the switches to see which one was closed.

Let's say the first digit you selected was a 9. The clock, through the count gate, will pulse the 9316 IC14 and keep changing the BCD address of the 74150 multiplexer bus until the bus has the address 9 on it. The output, pin 10 of the 74150, will go high, as it will invert the input number 9 which we have now held low via the switch. On the next count into the count gate, 15B, the not-Q output, pin 9, will go high and put a low on the output of IC24. This gets inverted by IC27 and causes the IC4A one-shot to update the 4-bit latch, IC13, so that it transfers a BCD 9 from the multiplexer's address bus to the digit bus. Now the 9316 counter continues to count until it reaches 12 (c and d high).

Again on the next count, IC15B, pin 9, will go high, putting a low on the output IC12, pin 6, which transfers the digit counter information via the digit gate, IC19, to update the digit one latch, IC18, so that it transfers a BCD 9 onto the IC23 one-of-ten decoder. This puts a low on pin 11 of IC23 and holds a low on one of the inputs of the IC29 three-input NOR gate. Nothing can happen yet as the other 2 inputs of that gate are both high by the second and third digit 7442 2 and 3 outputs.

The 9316 IC14 counter continues to count until it reaches BCD 15. Then the TC output (pin 15) will go high, gets inverted by IC27, and puts a low on IC25, which in turn resets flip-flop IC15A, turns off the count gate, IC15B, and resets ICs 14 and 4A. The circuit now waits for the next digit.

If the five-second timer times out, the counters get set to zero and no more digits can get through. You must now start all over again by hitting the * input. If the timer has not timed out and you press another digit 9, the whole process is done over again, except the digit counter is set to 2 (pin 9 high and 12 low). Now the second nine will be transferred to IC22 and a low output on pin 11 will put a low on the second input of IC29.

On the third digit, if the timer has not timed out, we again select, say, a nine. This will be transferred to the third 7442, and the third input of IC29 is low. The output of this gate will go high, putting a high on one of the inputs of the 2-input NAND gate, CW ID IC32. On the third digit, the 2 outputs of the digit counter, pins 9 and 12 of the 7490, are high. On the fifteenth count of IC14 on the third digit only, a pulse will get through the 3-input NAND gate, IC12, pin 8. This resets the five-second timer, gets inverted by IC3, and puts a positive on one of the inputs of the 2-input AND gate, IC3.

If no 0s have been selected, a high will be on the other input via IC12 and IC3. A high will then get through IC25 and put a high pulse on one input of all the 7400 control gates. Since we now have a high on only one of the other inputs to the control gates, IC32, we will get a pulse only out of the CW ID gate. This we will use to key an ID circuit. This pulse will last only as long as it takes for the timer to reset the digit count gate back to zero.

All the other outputs operate in the same way. On the transmitter power on and off, I have flip-flops. Digit 131 will set IC34A so it holds the 75450 driver on and the driver keeps a power relay picked up. The transmitter can be shut down by sending a 246, as this resets flip-flop IC34A. A 321 allows the carrier-on relay to be picked up so the transmitter will repeat the receiver. An 888 will turn on the transmitter for 1 minute and is used to either check the output of the repeater or to tune up the receiver to the repeater. Gone are the days when you have to call up another station to key the repeater so you can check your receiver frequency.

The three-digit controller I have shown here can be started and stopped by using any of the input signals as the activate key. You do not have to use the *; you could use, say, the 5 digit as the turn-on and then use the * in place of the 5.

You can see that it would be difficult for someone to tell just how you are controlling your repeater. First he must know which tone turns on the controller; then he must select out of almost 900 combinations which one does what. Another trick is to not have anything happen after the 3rd digit is sent, but have a latch that will wait for one more tone that would operate the control gates. This would, of course, be on the timer so that, if you waited too long, the controller gets reset. If you really want to get tricky, you can add more digits; you can expand this unit to up to a 15-digit controller. You would have to do a little buffering on the digit bus and add more 7442s as well as change the digit count gate, but it could be done.

Since I have explained this circuit to you in detail, I am not going to tell you how we control the Navmarcormars repeater in the Buffalo area. Come on over and try to play with all the combinations to see what you can do. As soon as you get it all figured out, we can change it in about ten minutes, as it is all wire-wrapped.■

Oddball Splits and the IC-22S

—work <u>any</u> repeater

Robert E. Bloom W6YUY
8622 Rubio Ave.
Sepulveda CA 91343

Do you have a favorite repeater with frequencies so nonstandard that your Icom 22S cannot be programmed to it? Fear not—the 22S can be made to operate on any odd split and will operate in the reverse mode, to boot.

The intent of this article is threefold: first, to provide information that is difficult to extract from the instruction manual furnished; second, to provide basic technical information to help you solve your particular problem; and, finally, to show one of the several methods used to get into one of the country's oldest, most modern, and most populated repeaters—WR6AMD (previously WR6ABE).

If you read *73*'s "Looking West" column by Bill Pasternak WA6ITF, you may be somewhat acquainted with this famous repeater. If you plan to visit within 300 or so miles of Los Angeles, you most likely would like to access it from your transceiver.

First, here are a few points of interest about WR6AMD and its environment. WR6AMD is located more than a mile high in the mountain section known as Mount Wilson. There are also about 300 commercial stations in the area. The environment is so hostile that no vacuum tube voltmeter is usable, as the meter always reads full scale. In addition, WR6AMD occupies one of the highest points on the mountain. Its antenna is mounted 180 feet above the ground at the top of an FM station's antenna tower. WR6AMD operates on the odd split frequencies of 146.40 out and 147.435 in.

How do you program such a rare split? The following should make this clear.

Some important statistics about the way the IC-22S operates should come in handy at this point. If you look at the coding charts in the rear section of the instruction manual, the left half of the page provides information relating to the basic frequency that is to be programmed. This is the received frequency. For duplex transmissions, the output frequency will be 600 MHz higher. Programming is accomplished by stuffing diodes into a diode matrix board inside the set. The information on the right-hand side of the coding chart page relates to the digital code and diode placement. Note that the left side of the page has a column entitled "Total N," and, for the lowest frequency listed, 146.010, there are 108 total "N". This "N" is the decimal addition of the total number of bits in the binary coding.

Table 1 is a replica of

Simplex	Set freq. (MHz)	Duplex	PLL out freq. (MHz)	1/M freq. (MHz)	Total N	128 D7	64 D6	32 D5	16 D4	8 D3	4 D2	2 D1	1 D0
						Diode Insert Positions							
1	146.010		135.310	1.620	108		•	•		•	•		
2	146.025		135.325	1.635	109		•	•		•	•		•
27	146.40			2.010	134	•					•	•	
56	146.835			2.445	163	•		•				•	•
60	146.895			2.505	169	•		•			•	•	•

Table 1.

portions of the binary coding taken from that section of the instruction manual. Adding together the decimal total for the binary values for just those columns containing an asterisk, you will verify that the frequency 146.010 has an "N" of 108. Each succeeding "Set freq." listed increases the frequency by 15 kHz, while the "N" total count increases by one binary bit. The conclusion to be derived here is simply that, for each additional binary bit programmed, the frequency will increase by 15 kHz. The column "1/M freq. (MHz)" indicates the frequency 1.620 MHz. Multiplying an "N" of 108 x 15 kHz = 1.620 MHz. Now we know how this column is derived. Subtracting 1.620 MHz from 146.010 produces a frequency of 144.390, which we can conclude would be the reference frequency upon which all the other frequencies are based. In addition, it is the equivalent of a frequency that could be generated if no diodes at all are placed in the matrix.

With this basic information, let's see what would be necessary to generate the frequencies for the questioned repeater with a receiving frequency of 146.40 and a transmitting frequency of 147.435. Refer to Table 1 where some additional matrixing frequencies have been inserted. Simplex channel no. 27 indicates this frequency, and it takes diodes in D7, D2, and D1, producing a total "N" of 128 + 4 + 2 = 134. If we duplex this by adding the 600 kHz, the output frequency would be 146.40 + .600 = 147.00. But we need 147.435. 147.435 would like to see a receive frequency of 147.435 minus 600 kHz, or 146.835. So we have shown in Table 1 what coding 146.835 would require as a receive frequency. Simplex no. 56 relates this. From information previously furnished, it can be verified that a total "N" of 163 is required. 163 is made up from diodes placed in D7, D5, D1, and DØ. Now we have reached the full impact of the situation on hand, and we must evaluate what we have.

Since 146.40 produces a transmit frequency of 147.00, and we need 147.435, which takes a receive frequency of 146.835, what is necessary to deceive the 22S into thinking that, at the moment the mike switch was activated, the receive frequency was not 146.40 but 146.835? We have to have an electronic switch to switch in the required additional diodes to make the receive frequency appear as 146.835 at the instant the mike button is depressed.

This can be done with gates. We will have gates activated into the circuit and plug in the additional diodes, D5 and D1. Let's add the "N" count and verify that this will actually happen. When the mike button is pressed, the diode matrix sees diodes in D7, D5, D2, D1, and DØ, or 128 + 32 + 4 + 2 + 1 for an "N" of 167. Something's wrong! Referring to the chart, 167 is a frequency of 148.895. We have 4 bits more than we require. Looking at Table 1 again, we see that we have a (4 bit) diode in the D2 position for 146.40, and there is no programming of a diode in this position for 146.835. Surely if we can switch in diodes, why can't they be switched out the same way?

Results of the evaluation show that we must switch two diodes into positions D5 and DØ while switching out diode D2. This can be done by using a single chip with multiple NAND gates. Use CMOS for low current drain. Looking through vendors' catalogues, the RCA CD-4011A looks like a good choice.

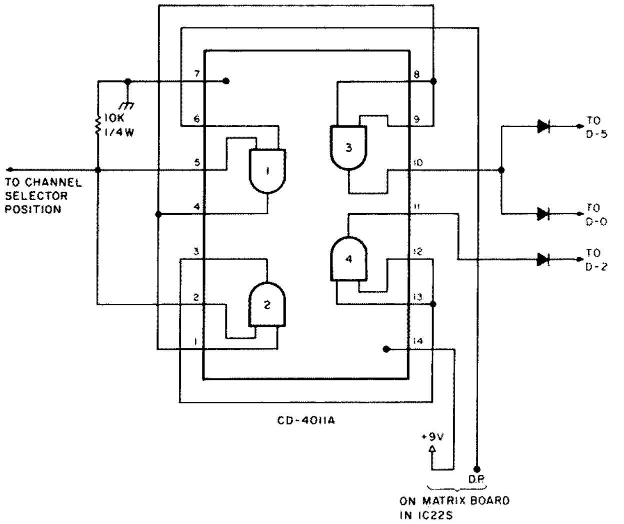

Fig. 1. Diodes are 1N914 or other silicon computer diodes.

Now we must look at the voltage changes that take place during transmit switching. Refer to the IC-22S diode matrix unit schematic which is on the backside of the large schematic furnished with the manual. Note that, on the corner of the matrix board in the receiver, there is a solder tab labeled 9 V, which is a regulated voltage. Right next to it there is a solder tab labeled DP. The 9 volts is ever present at the 9 V tab, but it is only on DP when in the transmit position. It will be necessary to solder a wire to each of these points. When a channel is selected by the channel selector switch, it places 9 volts to the diodes in the matrix for that channel, thus activating the receiver mode of operation.

The small module to be described is placed on a canned PC board about 1" square. The only thing on this board is the IC type CD-4011A, three silicon diodes, and one 10k Ohm resistor. The piece of PC board, which I snipped off a larger board, had a conductor strip along one edge. This made it possible to mount it to one of the shield partitions. A spot of solder to the board and partition in two places or seamed along the edge will contain the module. Thin teflon-covered stranded wire is run from the module in 2" to 4" total lengths. Select an unused channel or channel 23, as I did. Channel 23 has no wire running to the switch, but there is an unused position visible by turning the set to the side opposite that con-

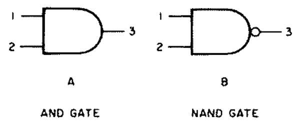

AND gate

Inputs 1	Inputs 2	Output 3
L	L	L
H	L	L
H	H	H

NAND gate

Inputs 1	Inputs 2	Output 3
L	L	H
H	L	H
H	H	L

Fig. 2.

IC pin no.	9 V at pin 14	9 V at pins 14 and 5	9 V at pins 14, 5, and 6
1	H	H	
2		H	H
3	H		H
4	H	H	
5		H	H
6			H
7			
8	H	H	
9	H	H	
10			H
11		H	
12	H		H
13	H		H
14	H	H	H

Table 2. CD-4011A level states. H = high. Blank = low. Pin 7 is the voltage reference negative.

taining the matrix board.

To satisfy yourself that this unused tab is indeed channel 23, check continuity by placing the ohmmeter leads from the 9 V point and the vacant switch tab. Set the switch to the channel next to 22, which shows a dot when in position. There are two dot positions on the dial. The dot adjacent to channel one is not the one you want. (No, I don't know what that is for.)

We are now ready to examine the CD-4011A circuitry required and how it works. A nice thing about this circuit is that you can test it before attempting to place it into your IC-22S. All that is required is a 9 V supply or transistor radio battery and a voltmeter.

Refer to the IC, a quad NAND gate, in Fig. 1. Its function on receive is to put one diode in the D2 position on the matrix board. On transmit, remove the D2 diode and put two others in D5 and DØ. Let's say we decide to wire this in for operation in channel 23. This position requires the longest wires, but lead length does not appear to introduce any problems. When switching to channel 23, a plus 9 volts is placed on pin 5 (the input of one of the gates). Table 2 indicates the voltage levels on the IC in three different states. An H is used to indicate high and a blank for low.

The first column indicates the pin voltages with voltage applied to the minus and plus terminals only, pins 7 and 14. This entire test can be made on the bench prior to installation in the set. The second column shows conditions when adding a 9 V connection to the signal input point, pin 5. And the third column shows the voltage state when 9 volts is added to pin 6. This is the transmit state. In the receive state, we are looking for a plus (or H) level at the anode of D2 and a low on D5 and DØ; in the transmit state, the opposite. For those who need information on the operation of an AND or a NAND gate, Fig. 2(a) and Fig. 2(b) provide a brief explanation of how they function. Also provided is a truth table. This shows the various voltage level states under any condition.

Fig. 2(a) is a dual-input AND gate; Fig. 2(b) represents a dual-input NAND gate. The dot on the output of a NAND gate indicates that an inversion of polarity takes place. Gates can have one or more inputs, depending on the complexity of the circuit requirements. When many inputs are required, referencing a truth table is the easiest way to follow all functions.

In an AND gate when all inputs are of the same level, the output level will be the same as the input. In a NAND gate when, and only when, all inputs have the same level, the output will have the opposite level. Refer to Table 2. Now that we understand how gates work, let's see what happens in Fig. 1 and follow through in Table 2. Place 9 volts on pin 14, negative on pin 7. This biases the chip for operation. Add a 9 V + level to the signal input, pin 5, and follow through with the logic levels. The individual gates have been assigned arbitrary identification numbers. The first gate shows input 5 high and 6 low for an output at 4 that is high. #2 then has pins 1 and 2 high for a low on pin 3. #3 has pins 1 and 2 high for a low on pin 10. Diodes D5 and DØ are off (like out of circuit). #4 has pins 12 and 13 low for the output pin 11 to be high. D2 is high, as are the diodes in D7 and D1 on the matrix board. This places the transceiver in the mode for receiving 146.40.

Now let's put +9 V on pin 6, which depicts the transmit mode. Following through once again, #1 gate has pins 5 and 6 high, output pin 4 low. #2 has pin 1 low and 2 high, while the output is high. #4 has 12 and 13 high and 11 low, taking D2 out of the circuit as required. #3 has pins 8 and 9 low for a high output which turns on diodes D5 and DØ as required. We have shown how and why it works. This same logic can be applied to repeaters you may like to have but thought you would have to do without.

Wiring It In

The small circuit board you have just finished will need a total of 7 short wire leads, 6 if you have a piece of foil on the board that can be soldered to a case shield. Pin 7 from the IC is ground and goes to this point. The unit can be mounted between the panel and the outside of the partitioned module containing the 43.9 MHz and 10.24 MHz oscillators. See page 15 in the manual.

The other 6 leads all go to the matrix board selector position on the matrix. Pin 14 goes to the tab marked 9 V, pin 6 to the DP tab on the board. Pins 1, 4, and 5 of the IC go to the input selector position of your choice. The diode cathodes of D5, DØ, and D2 go to the cathode input point of the selected channel on the matrix.

For normal operation, the duplex switch will be in the B position. Placing the switch in the A position reverses the operation, and 147.435 now becomes the receive frequency.

Still, some may have the question, "That's fine for a WR6AMD modification, but how do I handle a problem that requires two diodes to be switched out of the receive position when I go into transmit? In addition, I also need one more diode for transmit than you show coming out of the CD-4011A." Looking at Fig. 1, two diodes are fanned out from the gate feeding pin 10 (D5 and DØ), so you can fan out an additional diode. Likewise for the diodes you wish to switch out. You can do that from pin 11.

It is always necessary to program the lowest of the frequencies for receive. Looking over the program chart, you see that you will always need either D7 or D6; when you do not need D7, you almost always need D6 and D5. That only leaves 5 more positions maximum that can possibly require additions or subtractions, and the information in these pages should lead you to a solution to your personal problem. ■

Eric Shalkhauser W9CI
527 Spring Creek Road
Washington IL 61571

The History of Ham Radio

—part VI

Reprinted from QCC News, a publication of the Chicago Area Chapter of the QCWA.

In the winter of 1920-1921, radio amateurs were openly dreaming about beaming radio signals across the Atlantic Ocean. However, their plans were not very well organized, and attempts during February, 1921, resulted in failure. No signals were heard, although many British stations were listening intently.

The effort prompted the operating department of the American Radio Relay League to make a renewed attempt. This time, to eliminate confusion and unnecessary QRM, a contest was planned and executed to select the stations within the American continent whose signals had the capability to cover the long distance. Applicants were required to first fill out a prescribed form. (The wording on this form was reproduced in the last chapter of "The History of Ham Radio," *73*, December, 1977.)

The renewed attempt was planned for the period of December 7-16, 1921. Test transmissions were to start at 7 pm and continue uninterrupted until 1 am EST. Each amateur radio district was to alternate, using a 15-minute time period, in making transmissions.

Phillip R. Coursey of London, editor of *Wireless World*, who was also instrumental in arranging the prior effort during the previous February, was in complete charge of all receiving stations in England and the other countries in Europe. All correspondence was routed through him. To assist and supplement the efforts of the British amateurs in coping with the problems (and there were many) of reception of American signals, the ARRL traffic department decided to have an American amateur sent to England to make sure that the most desirable and effective means were employed to insure success of the venture. Paul F. Godley, a native of Montclair NJ, who was a seasoned amateur radio operator and well versed in the use of shortwave equipment, agreed to undertake the assignment. Mr. Godley had adapted the Armstrong regenerative circuit to shortwave work.

Photos were taken from the 1BCG Commemorative Issue of the Proceedings of the Radio Club of America, Inc., *The Story of the First Trans-Atlantic Short Wave Message*, October, 1950.

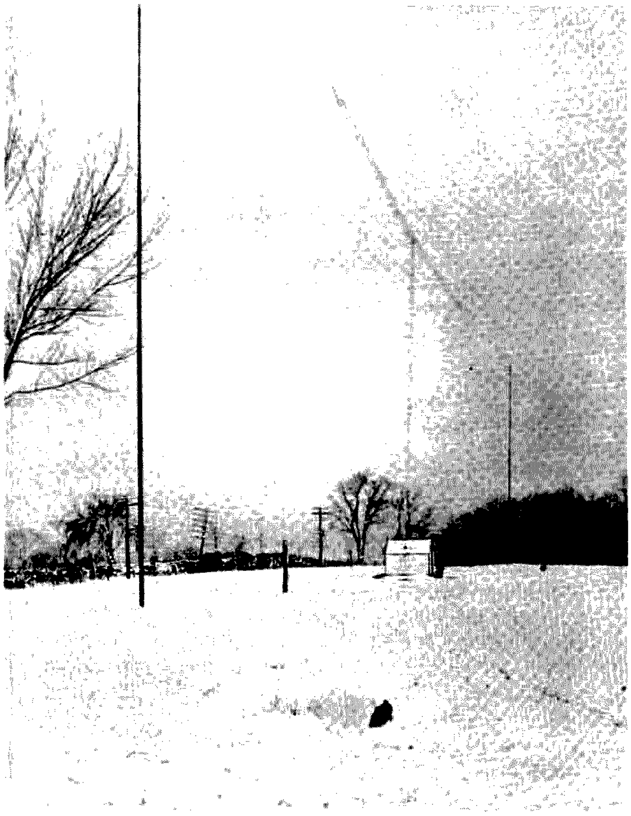

General view of 1BCG showing the station building, the masts, and the antenna system. The mast to the right is 100 feet high, the one at the left is 80 feet. The antenna is of the so-called cage type, T-shape, a new form of aerial construction, at the time, which was especially effective in continuous wave transmission because of its uniformity. The flattop section of this antenna is 100 feet long, and its down lead is placed in the exact center and is about 80 feet long. Instead of a ground connection, a counterpoise forms the other part of the radiating system. The counterpoise is simply a secondary antenna system located a certain distance below the actual antenna and a certain distance above the ground.

So Godley and the equipment which he selected to take with him, along with the British and their receivers, made the undertaking an all-amateur project with everybody participating. With this in mind, the ARRL traffic department set up the following overall schedule: Six hours each night, for ten successive nights, signals were to be beamed in the direction of England and Europe. The French and the Dutch, as well as all other amateurs, were intensely interested in what was being attempted. From 7 to 9:30 pm, a free-for-all schedule was to be followed. This two and one-half hour period was divided into ten sections of fifteen minutes each. During each section, all amateurs in a given amateur radio district would transmit. This would enable all amateur stations to take part. This part of the program was designed to open up the ether routes, one way or another, hoping that someone would get through.

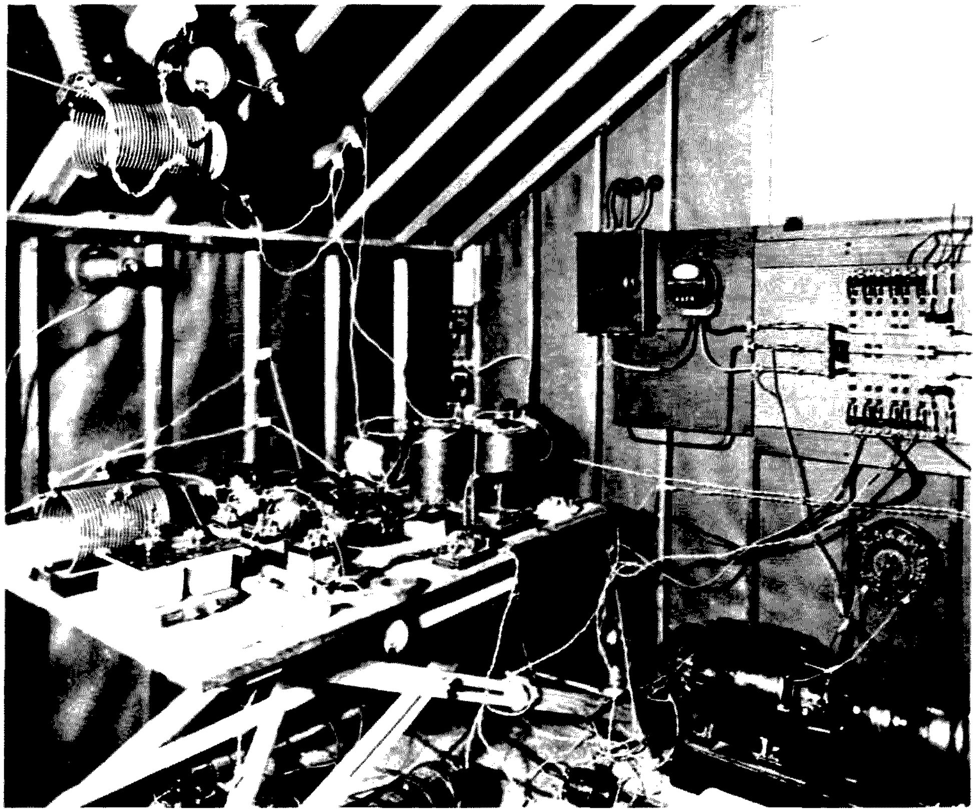

Interior view of the station.

The second and major period of each of the ten nights, *from* 9:30 pm to 1 am, was arranged exclusively for those qualifying amateur stations with the long-distance records. They were asked to beam their signals according to a prescribed selective schedule which was given to them by the operating department and kept secret until the day of transmission. Each station in the contest, free-for-all and selective, would initiate a call addressed to TEST, calling three times nd signing three times, repeating this as often as esired during the periods assigned to the district. For example: TEST TEST TEST e 1BGD 1BGD 1BGD (repeated).

Godley would keep an ccurate log of all signals heard and have witnesses to monitor all records kept. After each night of the tests, the results would be given to one of the British longwave stations and the results of the previous amateur transmissions relayed to the listeners in America. In this way, every amateur in the United States and Canada would immediately be informed of the outcome of their endeavors. Commercial station MUU at Carnarvon, on a wavelength of 14,000 meters with plenty of power, could be copied anywhere on the American side. As a special concession and because of the great interest that commercial companies took in these tests, the daily messages given by Godley to MUU were repeated by WII, the RCA station in New Brunswick, by slow Morse code, in order to let amateurs everywhere copy direct. This was done at 7 am GMT, and everybody knew within hours how well many were doing. A summation of the entire undertaking is to be found narrated in the January and February, 1922, issues of *QST*, with both Godley and Coursey reporting in detail.

Call	Location	Type	Wave	Cypher
1AFV	Salem MA	CW	200	YLPMV
1TS	Bristol CT	CW	200	AOTRB
1RU	W. Hartford CT	CW	200	BPUSC
1DA	Manchester MA	CW	200	CQVTD
1AW	Hartford CT	Spk.	210	DRWUF
1BCG	Greenwich CT	CW	230	GODLY
2BML	Riverhead NY	CW	200	FSXVG
2FD	New York NY	CW	200	GTYWH
2FP	Brooklyn NY	CW	200	HUZXJ
2OM	Ridgewood NJ	Spk.	200	JVAYK
2EL	Freeport NY	CW	200	KWBZL
3DH	Princeton NJ	CW	210	LXCAM
4GL	Savannah GA	CW	200	MYDBN
3BP	Newmarket Ont.	Spk.	200	NZFCO
8DR	Pittsburgh PA	CW	200	OAGDP
9KO	St. Louis MO	Spk.	200	PBHFQ
9AW	Toronto Ont.	CW	200	QCJGR
1ZE	Marion MA	CW	375	RDKHS
2ZL	Valley Stream NY	CW	325	TGMKU
3ZO	Parkesburg PA	CW	360	UHNLV
5ZZ	Blackwell OK	Spk.	375	VJOMW
6XH	Stanford University CA	CW	375	WKPNX
7ZG	Bear Creek MT	Spk.	375	XLQOY
8XK	Pittsburgh PA	CW	375	YMRPZ
9ZY	Lacrosse WI	CW	260	RZQMY
9ZN	Chicago IL	Spk.	375	ZNSQA
9XI	Minneapolis MN	CW	300	SFLJT

Table 1.

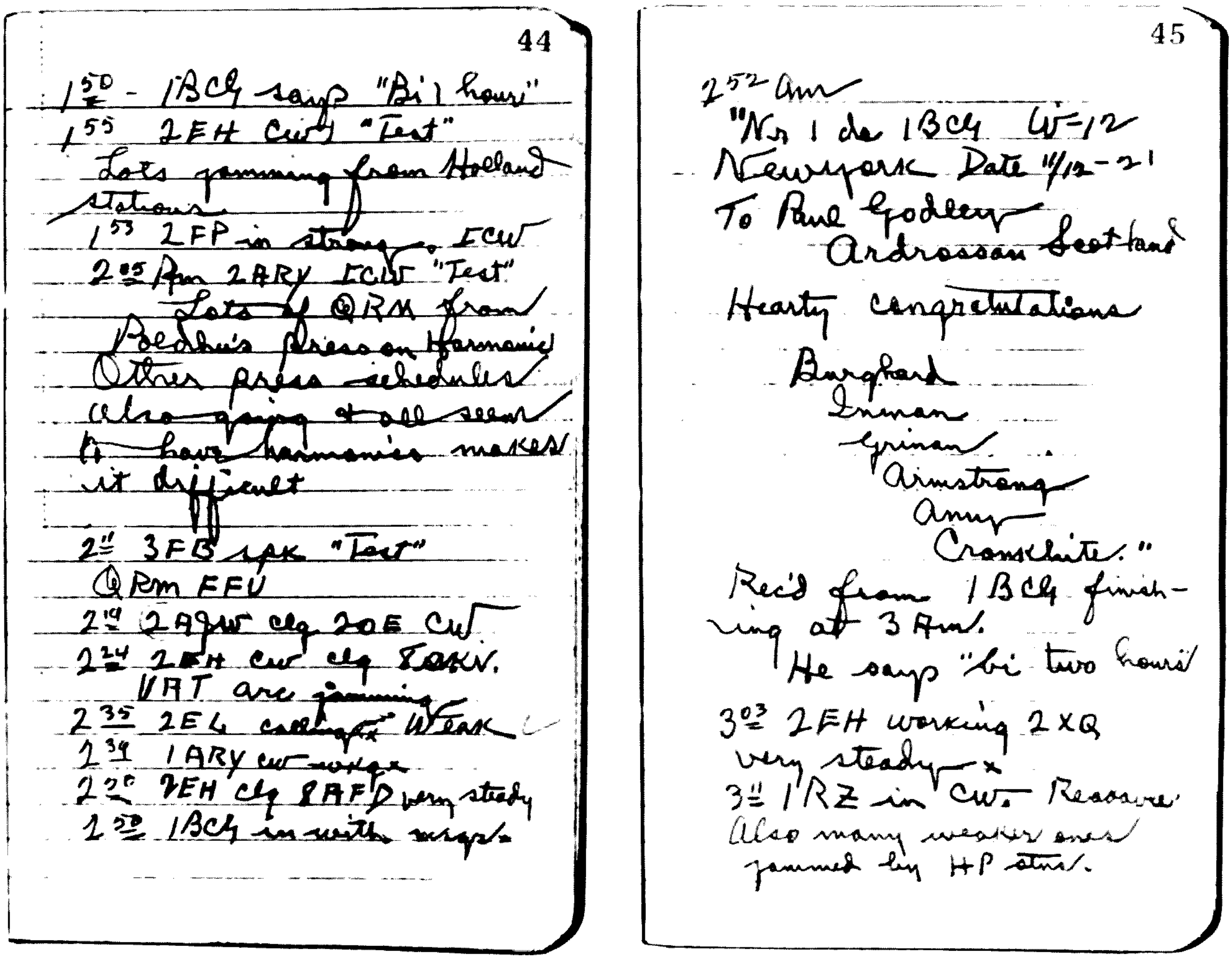

44

1^{50} - 1BCG says "Bi 1 hour"
1^{55} 2EH CW "Test"
Lots jamming from Holland stations
1^{53} 2FP in strong ICW
2^{05} Am 2ARY ICW "Test"
Lots of QRM from Poldhu's Press on Harmonic
Other press schedules also going & all seem to have harmonics makes it difficult
2^{11} 3FB spk "Test"
QRM FFU
2^{19} 2AJW clg 2OE CW
2^{24} 2EH cw clg 8AKV.
VRT are jamming
2^{35} 2EL calling x Weak
2^{39} 1ARY cw msge
2^{20} 2EH clg 8AFD very steady
2^{50} 1BCG in with msgs.

45

2^{52} Am
"Nr 1 de 1BCG W-12
Newyork Date 11/12-21
To Paul Godley
Ardrossan Scotland
Hearty congratulations
Burghard
Inman
Grinan
Armstrong
Amy
Cronkhite."
Rec'd from 1BCG finishing at 3 Am.
He says "bi two hours"
3^{03} 2EH working 2XQ very steady x
3^{11} 1RZ in CW. Reasonable
Also many weaker ones jammed by HP stns.

The first message. This is a facsimile of pages 44 and 45 from the original log kept by Paul Godley in Ardrossan, Scotland, showing the now famous "Nr. 1" as he copied it from station 1BCG at 2:52 am GMT on December 12, 1921. This 12-word message was the first ever to be sent across the Atlantic on shortwaves.

Many of the English amateurs, as well as some French and other stations, reported copying American signals. According to Godley, 22 CW and 6 spark stations were heard. The stations who made the grade are listed in Table 1.

Godley had set up his receiving station in Ardrossan, a small fishing village twenty miles to the west of Glasgow, Scotland. He chose this location in northern England rather than a location near London knowing that the previous effort had gone astray primarily because of regenerative receivers used in early 1921 causing a great deal of heterodyne interference.

To the credit of a group of American amateurs determined to make a success of the opportunity offered, a station was built from the ground up, starting on November 19, 1921. Shortly after, Godley departed for England on December 15 on the *Aquitania*, with the parting words to his well-wishers, "Please build a station that will get over there."

Six amateurs pooled their enthusiasm and assembled a station using the latest techniques known with the most advanced pieces of equipment available. They constructed an aerial system considered to be the best layout in theory and design for 200 meter radiation. The station was located in Greenwich CT, licensed 1BCG, the call of Mr. Cronkhite, who was one of the six.

The transmitter was initially put in operation on December 6, 1921. To inspect its performance, an agreed-upon long CQ was started on December 7th at 3:30 am that lasted until 4:30 am. This was the first day of the transatlantic tests. From the records of the log kept by Godley, these first signals were not heard. The log kept by Godley between the 8th and the 16th, monitored and checked by a Mr. Pearson, an observer, had the following statements repeated very often:

"Weather wet and boisterous, find atmospherics very heavy— harmonics jamming reception—reception conditions very sporadic—having to fight heavy static continuously—the interference from many stations is almost constant . . ."

It is interesting to read about these adverse conditions under which Godley and his observer had to operate. Their receiving equipment was located in a large tent out in an open field near the seashore. The wind, rain, mist, and chilling breezes made the situation very unpleasant. Since it was December, the temperature was usually in

the 30s, and they had no heat except a small oil stove. Keeping constant vigil was a trial, a severe test of endurance.

The receiving antenna was a 1300-foot longwire Beverage. It was strung up on ten twelve-foot-long wooden poles, not too firmly set into soft soil (which was covered with seaweed and very slippery to walk on). The cold rain and heavy squalls gave the men what came naturally under such conditions—a heavy cold and near pneumonia. As Godley aptly logged the situation, "A continuous fight against static and harmonic and cold and wet that drove one almost crazy."

The receiving equipment consisted of a Paragon regenerative receiver, together with a type DA-2 detector amplifier and a super-heterodyne receiver using ten tubes, a resistance-coupled amplifier, and an external beat oscillator. This equipment was chosen as being the best possible for both sensitivity and selectivity. Godley's aim in his receiver selection was to find an answer to the secrets of the Armstrong regenerative circuit, especially when reception of CW versus damped waves was concerned. This was a problem, one of the major ones, in the early 1920s.

Then, on the night of December 11, the signals from 1BCG came booming through with clarity and volume over much QRN and other interference. The message was logged by Paul Godley:

"Nr. 1 de 1BCG words 12, New York, December 11, 1921: To Paul Godley, Ardrossan, Scotland. Hearty congratulations. Burghard, Inman, Grinan, Armstrong, Amy, Cronkhite."

The story on the success of 1BCG in all of its details may be found in a booklet entitled *The Story of the First Trans-Atlantic Short Wave Message*, published by the Radio Club of America, Inc. The message transmitted on the night of December 11, 1921, and acknowledged by cable to the ARRL headquarters by Godley was the first message to cross the Atlantic by shortwave amateur radio.

Now that this endeavor was successfully accomplished, an amateur fraternity grew in spite of amateurs being relegated to the short wavelengths of 200 meters, where it was considered impossible to carry messages to any great distances with a power input not to exceed 1000 Watts. The event opened the door to bigger doings. The part played by amateurs, and exclusively by amateurs, in sending a message across the Atlantic with their simple homemade equipment was now recorded history. The distance covered was several thousand miles. Not until about 1926 were commercial circuits of a practical nature inaugurated on shortwaves, several years after amateurs had explored and demonstrated that the higher frequencies below 200 meters were feasible and practical and of real value in long-distance communication.

What happened in December, 1921, marked a turning point in radio history. What had appeared in books and been propounded in theory up to now, this "knowledge of the art," was now disproved. A new field of investigation was opened up for exploration. Through experiments, amateurs tackled the unknown ether bands and came up with answers.

In the next chapter, I will explore the part amateurs contributed to the early days of radio broadcasting.■

CIRCULATION OF THIS ISSUE OVER 75,000 COPIES

RADIO NEWS

REG. U.S. PAT. OFF.

20 Cents
February
1922
Over 125 Illustrations
Edited by H. GERNSBACK

"THE 100% WIRELESS MAGAZINE"

Radio News for February, 1922 697

Amateurs Span the Atlantic

As reported by PIERRE BOUCHERON

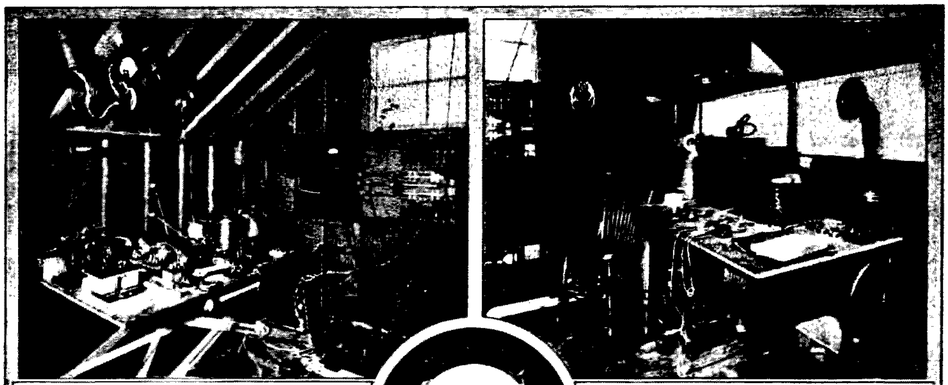

Above is the Transmitter at 1BCG. It Consists of Four 250-Watt Tubes Hooked up as Shown by the Diagram on This Page. The Radiation in the Aerials Was About Six Amperes.

The Long and Short Wave Receivers and Amplifier of 1BCG Hooked up to a Special Aerial. This Set Was Especially Used to Listen to the Messages From Mr. P. F. Godley. Sent by MUU Everyday.

THE Continuous Wave method of transmission has conclusively won its laurels for twenty (20) of the twenty - five (25) identified

The first amateur radiogram to be sent from the United States and to be received in Scotland during the great test is as follows:

2EH—C.W.—Radio Engineers' Club, Riverhead, L. I.
2FD—C.W.—J. DiBlasi, New York, N. Y.

John J. Risch WØFEV
3508 Whispering Woods Drive
Florissant MO 63031

Reusing Coax Connectors

—*worthwhile salvage job*

Recently, the price of coaxial cable connectors has risen dramatically. The most commonly used coax connector by amateurs is the familiar PL-259. This plug is useful for the RG-8/U size cables (.450-inch diameter) as well as smaller sizes with an appropriate adapter, reducers such as RG-58/U, RG-59/U, etc.

Prior to this price increase, most users simply discarded "used" plugs and bought new ones for each new cable assembly being made. Now, however, it becomes almost an economic necessity to use these same plugs over again for each new assembly.

The reason they were usually discarded was that it was more trouble than they were worth to attempt to recover them for reuse. Often the salvaging process damaged them to the point they were practically worthless, both from an appearance and a functional standpoint.

The most damage results from the unsoldering operation. Due to the "heat sink" properties of the connector body, considerable heat is needed to unsolder the shield braid, especially with the larger diameter cables and if it was a "good" solder job to begin with. In an attempt to get enough heat, you may be tempted to use your propane torch. Don't. True—you can easily unsolder the cable and pull it out in a few seconds, but you will no doubt carbonize some or all of the insulation material, usually Micarta or other filled plastic. In many cases, it may crack. Heat is not the answer. These plugs can easily be removed by a mechanical process, after only unsoldering the center conductor.

First cut the connector free from the cable; leave about 1 to 2 inches of cable on the connector. Remove the shell. Next strip back the jacket and slide the braid up toward the connector body. Use a sharp knife or razor blade and cut through the cable insulation all the way around and slip it off to expose the center conductor. When this step is complete, you can heat the connector tip with your soldering gun and with a small pair of pliers pull the center conductor free. Using the pliers again, try to pull or "tease" the remaining center piece of insulation material out. Don't worry if you can't. It may have melted into the braid during the original soldering job when first assembled. By now you are no doubt thoroughly frustrated and thinking of reaching for the "torch." Instead, lightly clamp the connector body in a small vise, or hold it with a small pliers. Do not apply too much pressure or you may deform the body. Use your electric or hand drill with a 1/8-inch diameter drill and drill through the solder ports of the connector. These can be easily located as they may show some braid through or be filled with solder. Drill straight through so the drill will come out the opposite hole (solder port). Be careful; you don't need any more holes here.

Do this for both sets of holes, even if they are not soldered. I usually only solder two opposite holes when assembling. Try again to pull the stub, braid and all, out. It will most likely come out easily, but if it still won't, go to the next step. Pull or otherwise dig out enough of the original cable insulation to get near the solder ports, or at least flush with the end of the body. Select a 1/4-inch diameter drill and, using a low or variable speed drill, drill down axially toward the tip end through the insulation. Do not drill too deep. Now try to "pick" between the braid and the connector body with a small screwdriver or other similar tool. This should do the trick. As a final step, use a 11/32-inch diameter drill in a hand-held holder such as a pair of vise grips or pliers and sort of "ream" out any solder, solder flux, and other debris. Run this drill all the way into the connector insulation and lightly scrape it clean.

This will give you a connector body "clean as a whistle" and ready to use again. It will not be discolored, but better still, the insulation will have retained its original properties.

This same procedure can be used to remove the smaller diameter cables after being sure to remove the adapter. If it somehow got soldered in, drilling through the solder ports should free it. This, of course, will ruin the adapter, but they are cheaper than a whole new plug. Good luck. ■

Rod Hallen WA7NEV
Road Runner Ranch
PO Box 73
Tombstone AZ 85638

Building From Magazine Articles

—the breadboard/wire-wrap way

In a previous article, I described a system for breadboarding IC circuits.[1] Carrying on from there, I would like to show how easy it is to pick projects out of magazines, build them up on the breadboard, and then transfer the whole thing to a more permanent arrangement.

The Design Console

For those of you who missed my first article, a brief description of the breadboard design console is in order. Four CSC[2] Experimenter Breadboard Sockets were mounted on a Bell & Howell Design Console that came with one of their correspondence courses (Photo A). The console contained a variable 0-to-30-volt dc power supply and I added a +5-volt dc regulated supply. In the article, I also gave schematics and other details for building your own design console from scratch.

Using the breadboard as an intermediate step between a magazine circuit or original design and the finished product has some very real advantages. It allows you to try the design first. This is especially important if you find it necessary to use components other than those specified by the author. Since changes are so easily made, this is the stage where you can try out any modifications that occur to you.

While it is true that many components are getting hard to get, such is not the case where integrated circuits are concerned. They are readily available and prices are rock bottom as will be apparent by checking the ads in this issue of *73*. After you read the ads, flip through the pages from cover to cover and see how many articles you can find that contain circuits which could be built up on the design console in a half hour or less. In the December, 1977, issue, I found seven, and other issues have that many or more.

Pick a circuit, put it on the breadboard, and see what makes it tick. This is an educational process as well as a productive one.

I always mount my ICs so that they all face the same direction. That way I'm always counting pins from the same starting point. Following the schematic, wire the ICs together. I cut lots of one-, two-, three-, and four-inch pieces of insulated twenty-four gauge wire and then strip ¼ inch off each end. I keep the different lengths in half-pound margarine cups and they are always handy. This is much easier than cutting wire as you go along. Do not use wire larger than twenty-two gauge. This includes the leads on half-Watt resistors and larger capacitors. Wire larger than twenty-two gauge will damage the connectors inside the breadboard socket.

Most schematics flow from left to right, so I build that way, testing as I go. Many circuits contain transistors, resistors, and capacitors which are easily incorporated into the layout on the console.

Troubleshooting

Whether you test as you go along, as I do, or wait until the whole project is laid out, some method of debugging is needed. Because of defective components, miswiring, or incorrect design, your circuit may not work properly at first. That is when I put my

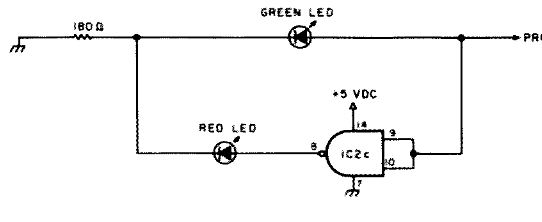

Fig. 1. A simple logic probe. Using two different colored LEDs makes for a more distinctive display but they can both be the same color. Vary the value of the resistor for best brightness. Remember that LEDs are light-emitting diodes and must be forward biased in order to light.

logic probe to work.

In the breadboarding article previously mentioned, I described a quick and easy logic probe that you can build (see Fig. 1). Construct this probe on your breadboard and then try touching the probe to the plus and minus power supply terminals. Either one LED or the other should light, depending on the polarity probed. If you touch the probe to a point in a circuit that is pulsing (alternating between positive and negative), the LEDs will follow this alternation if the frequency is low enough.

This probe is satisfactory for static testing, but for dynamic testing (when things are happening rapidly), it has two drawbacks. Pulses that occur more than a few times per second will light either one or the other or both LEDs continuously, depending on the polarity. This is confusing since you can't tell whether you are looking at a steady signal or a rapidly changing one. Also, a very rapid single pulse will be gone too fast for the LEDs

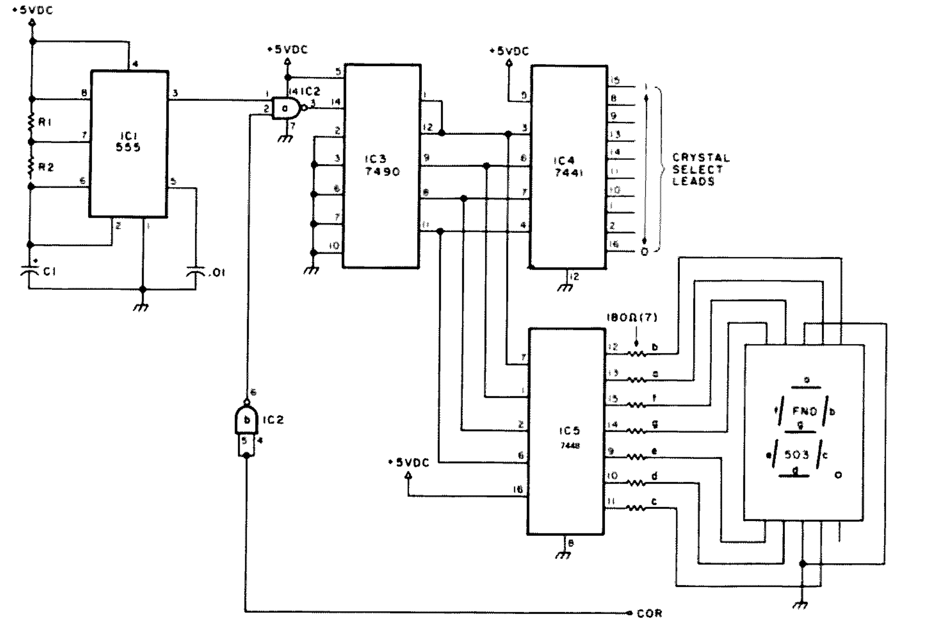

Fig. 2. Schematic of the two meter scanner. R1 = 1 megohm, R2 = 1.5 to 4.7 megohm, and C1 = .1 uF. The scanner is disabled by removing the +5 V dc from the ICs.

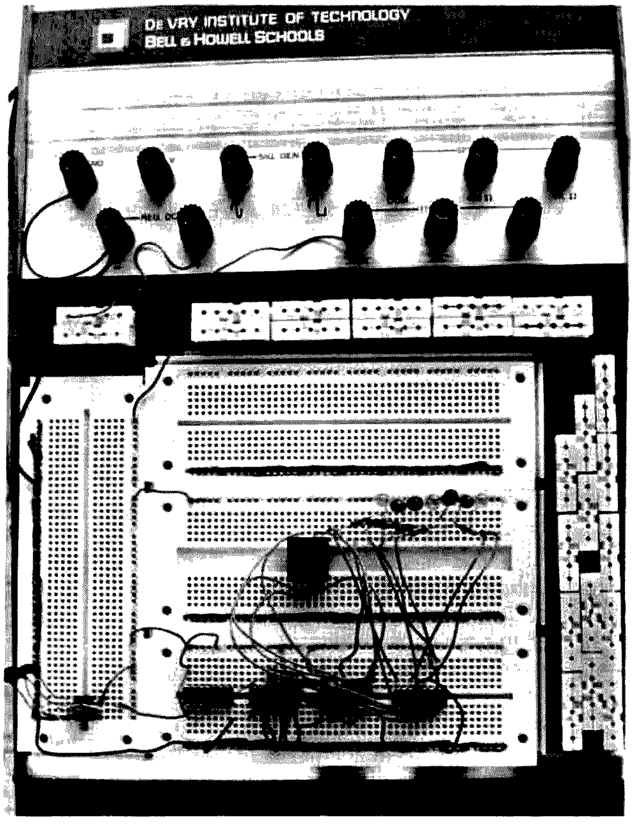

Photo A. Bell & Howell Design Console modified for IC breadboarding. This is nice to work with but all that is really needed are some breadboards and a +5-volt dc regulated power supply (Fig. 3).

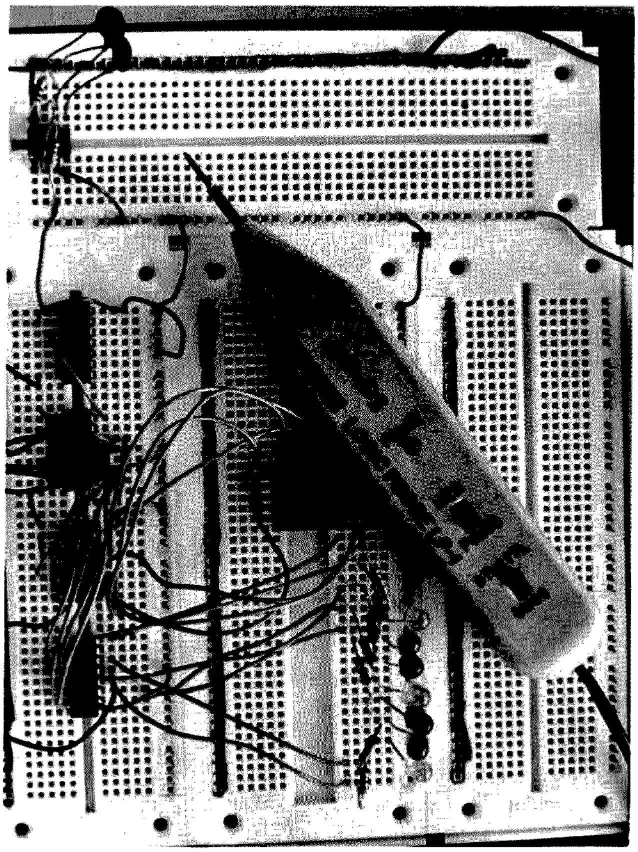

Photo B. The scanner as it looks on the design console. Also shown is the CSC LP-1 Logic Probe used to check out circuit operation.

Input Pulse	7490 Output 7441-7448 Input leads D C B A	7441 Output	7448 Output segments a b c d e f g
0	0 0 0 0	0	1 1 1 1 1 1 0
1	0 0 0 1	1	0 1 1 0 0 0 0
2	0 0 1 0	2	1 1 1 0 1 0 1
3	0 0 1 1	3	1 1 1 1 0 0 1
4	0 1 0 0	4	0 1 1 0 0 1 1
5	0 1 0 1	5	1 0 1 1 0 1 1
6	0 1 1 0	6	0 0 1 1 1 1 1
7	0 1 1 1	7	1 1 1 0 0 0 0
8	1 0 0 0	8	1 1 1 1 1 1 1
9	1 0 0 1	9	1 1 1 0 0 1 1
10	0 0 0 0	0	1 1 1 1 1 1 0
11	0 0 0 1	1	0 1 1 0 0 0 0

Table 1. Logical condition of various leads of Fig. 2. The numerals in the Input Pulse and 7441 Output columns are decimal and the numerals in the 7490 Output column is the BCD equivalent. 1 is a high and 0 is a low condition as seen by the logic probe. Anytime that a 1 appears in the 7448 Output column, that segment will light. For instance, the BCD equivalent of decimal 8 is 1000, and the digital readout will have all of its segments lit. By increasing the value of C1 in Fig. 2, the pulses can be made to occur so slowly that you can follow this action.

to react.

The LP-1 logic probe by CSC[2] is the solution to both of these problems (Photo B). In addition to HI and LO LEDs, it has a PULSE LED. Anytime that pulses are detected, the PULSE LED will light, indicating that you are not looking at a steady signal level. When looking for a quick single pulse, the MEM (memory) switch is turned on and the HI or LO and PULSE LEDs will stay lit after any pulse of at least 50-nanoseconds duration. CSC now has three logic probes from which to choose.

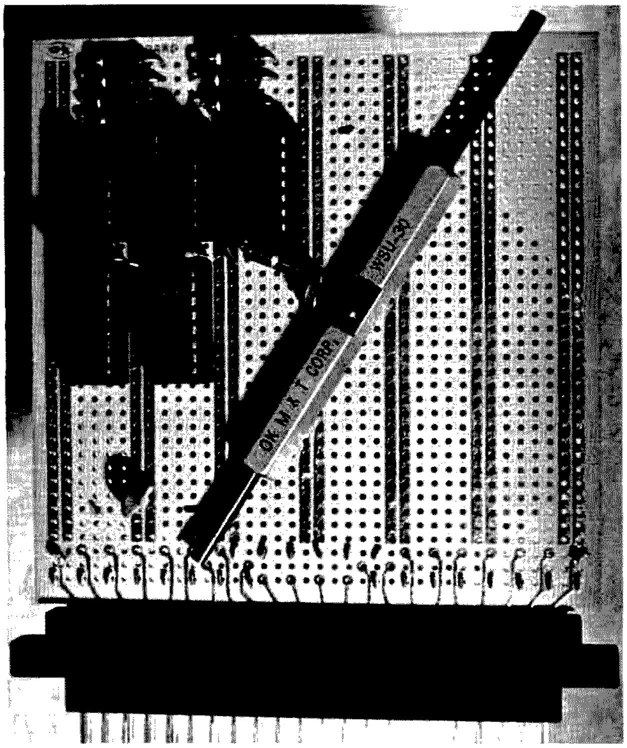

Photo C. The scanner only takes up a small area on the Hobby Board. The wrapper, also by OK Machine & Tool, tied it all together.

In order to use the logic probe properly, you have to know what to expect at any given point in your circuit. Fig. 2 is part of the schematic for a two meter scanner I've built and I'll use it as an example. IC1 (a 555 timer) is used as a pulse generator and the probe shows HI, LO, and PULSE when touched to pin 3. Obviously the generator is working. By replacing R1 with a pot, I can adjust the output frequency of IC1 to any value I desire. To really slow it down, increase the size of C1.

IC2a (7400 NAND gate) will pass the pulses from IC1 when pin 2 is high and stop them when it is low. A high or low can be created by running a 1000-Ohm resistor from IC2a, pin 2, to battery or ground. The probe shows this action clearly. Touch the probe to IC2a, pin 3, and change pin 2 from high to low and back again. IC2b inverts the COR lead from my two meter transceiver to make it compatible with the scanner. The COR is high when the receiver is receiving a signal and I need a low to stop the scanner.

IC3 (7490 decade counter) counts the pulses and indicates this count in BCD (binary-coded decimal) format on its A, B, C, and D leads (pins 8, 9, 11, 12). With pulses entering IC3 on pin 14, the A, B, C, and D leads should react as in Table 1.

IC4 (7441 decade decoder) takes this binary count and converts it to a one-out-of-ten format. These ten output leads actually do the channel scanning by sequentially grounding the crystal select leads in the receiver.

IC5 (7448 seven-segment decoder/driver) also takes this BCD format from IC3 and drives a seven-segment digital readout that tells us which channel we've stopped on.

The logic probe makes finding malfunctions in a circuit like this very simple if you know what to look for. More complex circuits are harder to debug, but the principle is the same. The important point to remember is that you have to figure out what you should find at a given location before you can determine whether you have a problem there or not.

Now that everything is working properly, you'll want to transfer all of this to a more permanent arrangement. After trying many different methods of construction, I have found that wire-wrapping is quick and easy for one-shot projects. Quick and easy, that is, once you get the hang of it. I finished the scanner just described in an hour and a half.

Breadboarding and wire-wrapping have many things in common—both advantages and methods. As on the design console, the wire-wrapped layout can be easily changed as desired. The majority of the solid-state components used in this type of project are integrated circuits which are wire-wrapped together very much the same way that they were connected together on the breadboard.

The Hobby Board by OK Machine & Tool[3] is ideal for this kind of construction (Photo C). The scanner leaves plenty of room for other ideas that I might want to incorporate later. The Hobby Board has a standard forty-four contact edge connector and sockets are readily available. This project could also be wire-wrapped on a piece of perfboard and permanently

mounted. The feature that I like about the Hobby Board/socket combination is the ease of making changes. The board is unplugged, changes or additions made, and the board is plugged back in.

Now, something other than a pair of longnose pliers is needed to do the actual wire-wrapping. OK Machine & Tool also makes a wire-wrap kit called the WK-2 which contains a wrapper/unwrapper/stripper, a fifty-foot spool of wire, and a batch of precut and stripped wire. The wrapper/unwrapper/stripper (WSU-30) and the spools of wire can be purchased separately. I haven't tried it, but OK also has a wire dispenser that cuts and strips wire to any length.

ICs are installed in sockets made for wire wrapping. Resistors, capacitors, and transistors with their leads clipped short can be inserted into IC sockets, or special component sockets can be obtained. As an alternative, the leads can be inserted through the board, wire-wrapped, and soldered. The soldering is necessary because the connecting wire does not wrap as tightly on round leads as it does on the square wire-wrap posts.

Battery, ground, input, output, and control lines are brought onto the board via the edge connector. A +5-volt dc regulator could have been mounted on the board, but it is a better idea to put the regulator on a good heat sink on the chassis.

To get from the edge connector to different points on the board, I solder to the edge-connector contact and then wire-wrap the other end of the wire where it is needed (Photo D). Buses on the board are used to distribute battery and ground. I place .01 uF disc ceramic capacitors between the battery and ground buses at various points to help filter the spikes that are generated by the rapid switching action taking place within the ICs.

The first step is to mount the IC sockets. I orient them so that the IC pins all count the same way. As a further aid, I draw a view of the bottom with all pin numbers shown. I also glue the sockets in place with rubber cement. It holds them fast but they can still be removed at a later date if need be.

Install the wires one at a time, following the schematic, just as you did when building your projects on the breadboard. Cut the wires long enough to allow some slack. Here also, I cut and strip a lot of wire to different lengths and store the pieces in plastic margarine cups.

Do not draw the wire bowstring-tight between posts, and be very sure that all of the wire stripped bare is actually wrapped on the post or it could short to adjacent posts. When it is necessary to put more than one wire on a post, the second wrap goes above the first. Some wrap posts are called three-level posts because there is room for three wrapped wires.

When the wrapping is finished, temporarily connect battery and ground and check things out as you did on the design console. Use your logic probe, and, if everything is right, you're ready to mount the perfboard or Hobby Board in its final location. I'll leave that part up to your ingenuity and circumstances.

Using the same wire-wrapping techniques, you could move from schematic to finished product without going through the breadboard stage, but I think that breadboarding makes the whole process easier. If you are doing your own designing or extensive modifications, then the breadboarding is invaluable.

Either way, the monthly magazines are full of ideas, circuits, and finished projects. Pick one out and try it for yourself. I think that you will be surprised and happy with the result. ■

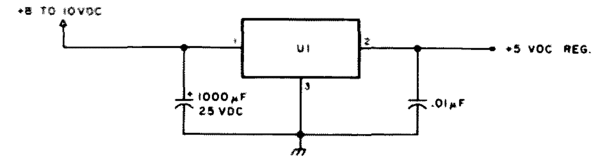

Fig. 3(a). +5-volt dc regulated power supply. The input voltage can be higher than that shown, but as the input voltage rises, U1 is required to dissipate more heat. U1 can be any of the following: LM309K, 7805, LM340K-5, or LM340T-5. Be sure to mount on a metal chassis with a good heat sink.

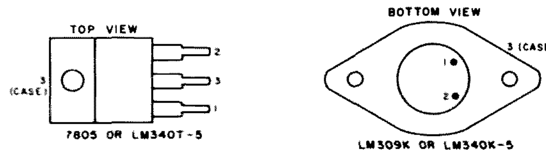

Fig. 3(b). Connections for various +5-volt dc regulators.

References

1. "Hey, Old-Timers! The Breadboard Is Back!", *73 Magazine*, May, 1978, pp. 46-51.
2. Continental Specialties Corporation, 70 Fulton Terrace, New Haven CT 06509.
3. OK Machine & Tool Corporation, 3455 Conner St., Bronx NY 10475.

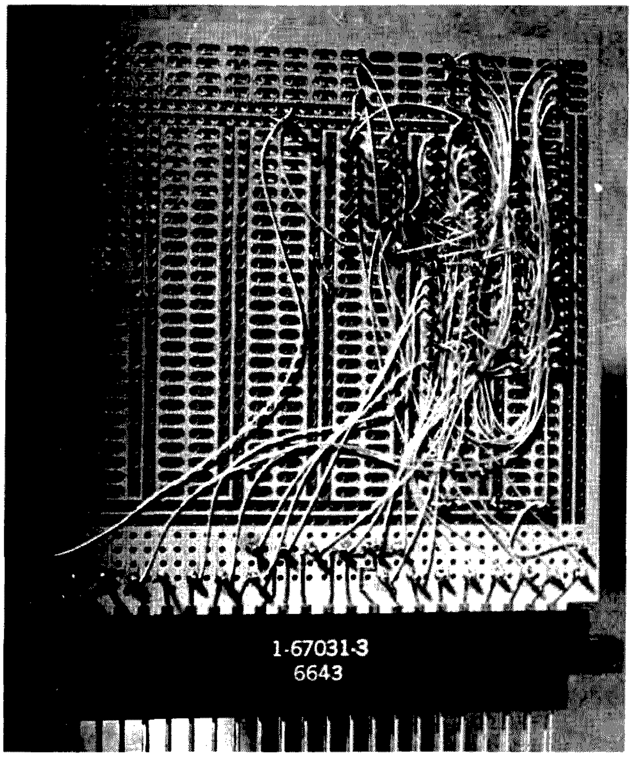

Photo D. While the wiring looks quite complex, wires are placed one at a time and it is really not difficult.

Super Simple TT Generator

— uses almost no components

Mark M. Minot WA6AFX
16763 Bollinger Dr.
Pacific Palisades CA 90272

Fig. 1 shows a schematic detailing my circuit for the generation of touch-tone™ frequencies. The circuit, to my knowledge, is the first to use an IC amplifier. It works extremely well, is quite easy to construct, and is inexpensive. Total cost for the project was under nineteen dollars.

The oscillator is a Motorola MC14410CP chip using a 1 MHz crystal. The chip generates both the high and low tones, feeding the energy to the amplifier through the 1k resistors and the 1-microfarad capacitor. Values for the output resistors can vary from a few hundred Ohms to about 60 kilohms. The value of the resistor shunting the crystal can vary from about three to fifteen megohms.

The amplifier consists of an LM-380N. This is one of the handiest linear chips around. It can output as much as two Watts of audio with a minimum of components. In the configuration shown (this configuration may be used for just about any audio amp application, as a look around my shack will evidence), input from the oscillator is fed to the inverting input. The value of this component may vary from about 470 pF to about .003 microfarads. The 4.7k resistor controls the tone of the outputted signal. If desired, a pot may be substituted for the fixed resistor, and any tone which will both work and please the operator's ears may be selected. Output is taken through a 25-microfarad capacitor and an 8-Ohm speaker. The 380 is designed to operate into 8-Ohm loads. The value of the capacitor may range from about 18 microfarads to well over 100. For 12-volt operation, change the 4.7k resistor between pins 2 and 6 of the LM380 to a 1k and add a .01 uF capacitor between pin 6 and ground.

Construction is easy. I built mine on a small piece of vectorboard using telephone wire to make connections. A later model was built using a PC board. It is highly recommended that an IC socket be used for the MC14410CP. I used sockets on both chips. They are inexpensive and can save a lot of grief! An old transistor radio box was used to house the unit and keyboard. I used the Chomerics EF-21360 keyboard. The terminals will only stand very brief periods of heat, as evidenced by the fact that I ruined one while overzealously trying to attain a good connection. On the second one, I held the wire against the keyboard terminal with pieces of spaghetti. Heat-shrinkable tubing may also be used. I put a pot into the output line between the speaker and capacitor to reduce the volume, as the 380 can put out quite a lot of audio! I also installed an external jack, as shown in the schematic, to permit direct connection to my rig. ■

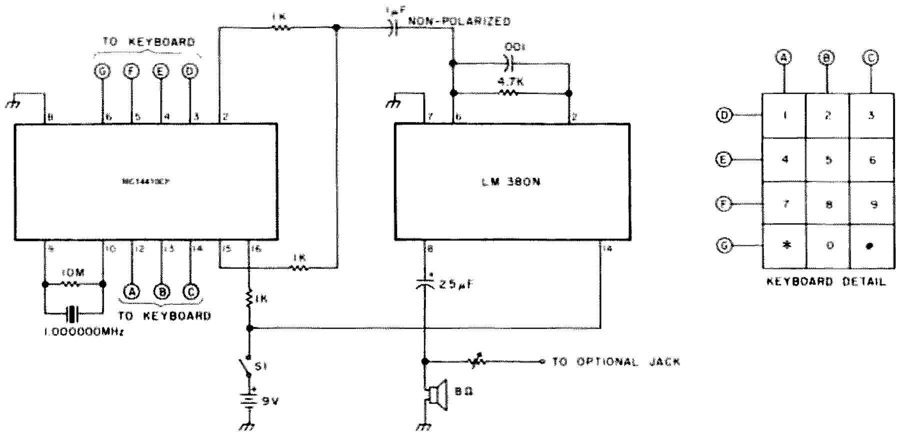

Fig. 1.

Microstrip

—magical PC technique explained

H. Paul Shuch N6TX
Microcomm
14908 Sandy Lane
San Jose CA 95124

Microstrip is a transmission line, much like coax or twinlead, except that it is fabricated not from wire or tubing, but generally by etching traces on a printed circuit board. Now, it's a cinch the average radio amateur isn't about to run a long, thin strip of printed circuit board up his tower, so the actual application of microstrip transmission lines is likely to be something other than feeding antennas. In fact, microstriplines are especially useful in developing couplers, baluns, power dividers and combiners, matching transformers, capacitive and inductive reactances, and a whole host of structures which utilize the distributed properties of transmission lines in lieu of "lumped" components.

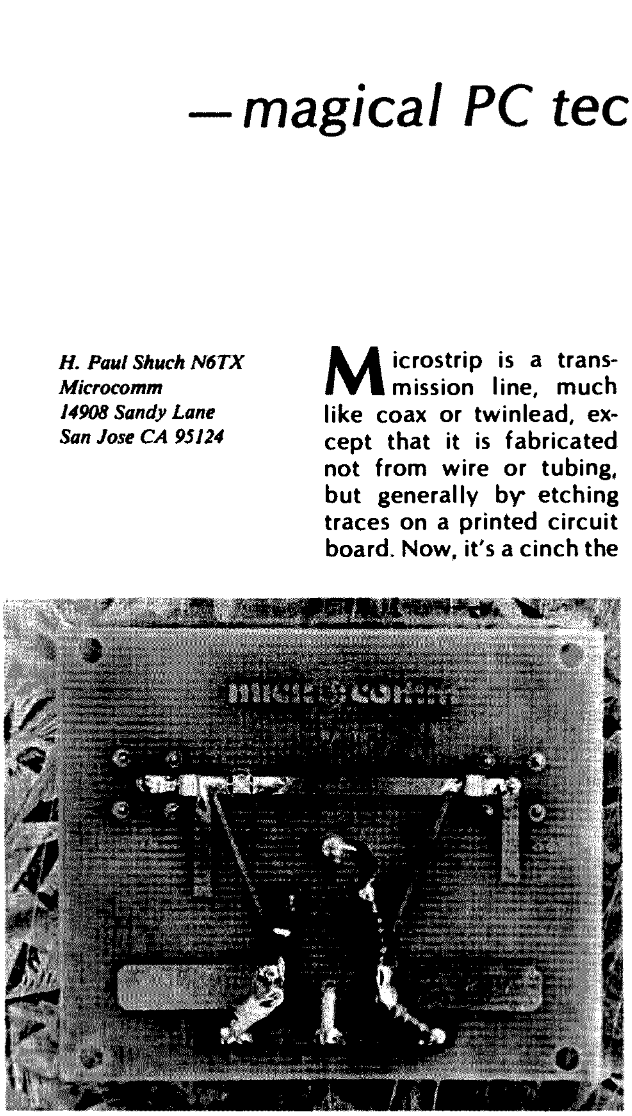

Typical microstripline preamplifier. In this circuit, the PC traces perform as matching transformers, inductors, rf chokes, and bypass capacitors. This particular preamplifier was designed for use in receiving weather satellites at 1.7 GHz, although the author has built similar units to cover the 420 MHz, 1215 MHz, and 2300 MHz ham bands.

The recent acceptance of microstrip techniques by radio amateurs has allowed PC layouts to be developed such that the traces used to interconnect components will themselves be used as circuit components. I have recently presented microstripline circuits for amplifiers,[1,2] mixers,[3,4,5] filters,[6] and complete converters.[7] In each case, successful duplication of the designs required only selecting the proper printed circuit material and adhering closely to the published layout and dimensions. This article is in response to numerous inquiries from radio amateurs who had successfully duplicated some of my designs, but wanted to know how the magical PC trace dimensions were determined.

Transmission Line Parameters

Any transmission line, be it coax, twinlead, microstrip, or what-have-you, can be described in terms of its characteristic impedance (Z_0) and length. Characteristic impedance is the terminating impedance seen looking into an infinitely-long section of the transmission line and is a function of the dimensions of the conductors, their orientation with respect to one another, and the dielectric constant of any material separating them. Transmission line length may refer to a physical di-

mension, but more often denotes the phase delay (measured in electrical degrees) of a signal being propagated down the line at a particular operating frequency. Such an electrical length is, of course, a function of the velocity at which the signal is propagating down the line; hence, if we specify a transmission line's velocity of propagation, we can generally calculate the electrical length of any physical line at any desired frequency. Since the velocity of propagation of electromagnetic radiation is free space equals the speed of light (a universal constant), and since this velocity cannot be exceeded by a signal propagated down an actual transmission line, it is common practice to specify for any transmission line its *relative* velocity of propagation (with respect to the speed of light), or *propagation constant.* From this decimal number, the electrical length at a given frequency is easily found for any physical length of transmission line.

I have recently published design techniques[8] which determine the characteristic impedance and electrical length required of transmission lines to be inserted at specified locations within amplifier circuits. Similar techniques exist for other types of circuit designs. What remains is to determine the required dimensions and layout for achieving the desired transmission lines. Since microstriplines can be fabricated over a wide range of characteristic impedances and at practically any length (limited only by circuit board size restrictions), microstrip transmission lines would seem an ideal medium for most circuit design, from frequencies of a few hundred MHz up through several tens of GHz.

Microstripline Variables

Any transmission line may be considered as a combination of series inductive and shunt capacitive elements, or sections, acting together as a delay line. The characteristic impedance of the resulting line can be shown to be proportional to the ratio of inductance to capacitance for a unit length.[9] Algebraically,*

$$Z_0 = \sqrt{L/C}$$

Consider Fig. 1, which is a representation of a typical microstrip transmission line etched from double-clad printed circuit stock. The thin strip atop the board, with respect to the unetched ground plane, comprises the transmission line. A signal injected (or "launched") into the strip at one end will emerge, after a given propagation delay, from the other end. Since the above equation holds for at least a first-order approximation, determining the characteristic impedance of the microstrip transmission line in Fig. 1 involves merely quantifying the inductance and capacitance per unit length.

Like any conductor, the etched trace in Fig. 1 exhibits an inductance per unit length which is inversely proportional to its width, W, and thickness, t. The capacitance between the strip and the ground plane varies directly with the line width, W, varies directly with the dielectric constant, ε_r, of the material separating the plates of the capacitor, and varies inversely with the spacing, h, between the plates.

*Strictly speaking, this relationship only holds for transmission lines propagating signals in the transverse electromagnetic (TEM) mode—that is, with electric and magnetic lines of force both at right angles to each other and at right angles to the direction of propagation. Fortunately, microstriplines closely approximate TEM propagation in most applications.

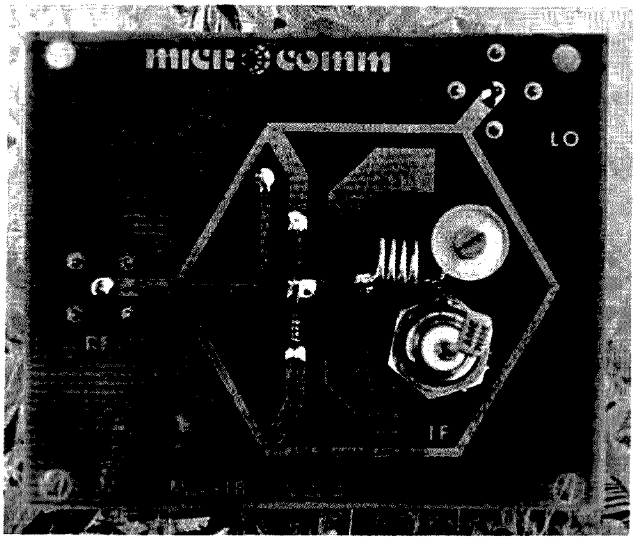

Balanced mixer. Here microstriplines are used to introduce rf and LO signals to a pair of mixer diodes (center of board) in the proper phase relationship for linear heterodyne conversion to take place. The PC traces also furnish impedance matching i-f filtering and dc return for the mixer diodes. Again, this particular mixer is optimized for weather satellite reception at 1.7 GHz, but similar designs have been used for transmit or receive conversion in any of the amateur microwave bands.

Thus a series of proportionalities can be developed:

$$Z_0 = \sqrt{L/C}$$

$$L \propto \frac{1}{Wt}$$

$$C \propto \frac{W\varepsilon_r}{h}$$

Therefore,

$$Z_0 \propto \sqrt{\frac{1/Wt}{W\varepsilon_r/h}}$$

where α (the Greek lowercase alpha) indicates that the quantities are proportional rather than equal.

Inverting the denominator within the radical sign and multiplying it by the numerator, we get:

$$Z_0 \propto \sqrt{\frac{h}{W^2\varepsilon_r t}}$$

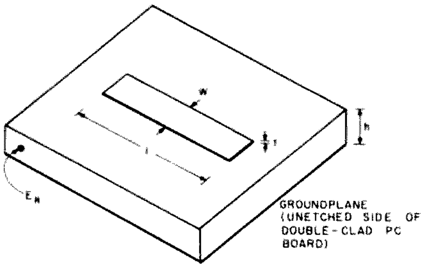

Fig. 1. Representation of a typical microstrip transmission line etched from double-sided printed circuit board. Variables affecting the line's electrical performance include the width, W, of the microstripline, the height, h, of the strip above the ground plane (this being related to board thickness), the thickness, t, of the strip metallization, the length, l, of the strip, and the relative dielectric constant, ε_r, of the substrate.

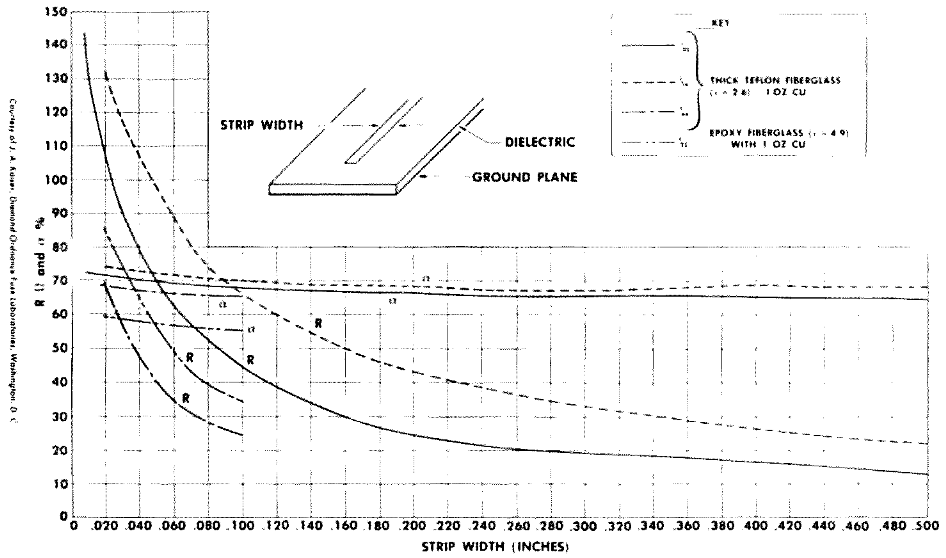

Fig. 2. Measured microstripline impedance and propagation constant versus strip width.

which at least allows us to draw some general conclusions about microstripline dimensions, if not determine them directly.

Generalization #1:
Wide lines have low characteristic impedance, while narrow lines exhibit high characteristic impedance.

Generalization #2:
For a given characteristic impedance, the required line width is narrower for thin substrates than it is for thick substrates.

Generalization #3:
For a given characteristic impedance, line width will be greater on low dielectric-constant materials than it will with higher dielectric constants.

Generalization #4:
Increasing the thickness of the metallization tends to decrease the characteristic impedance of the line (this will be discussed in greater detail in a later section of this article).

A similar series of proportionalities can be developed for describing the velocity of propagation along a microstrip transmission line, starting from the relationship:[9]

$$v = \frac{1}{\sqrt{LC}}$$

Without belaboring the calculations, let us generalize:

Generalization #5:
Velocity of propagation decreases with increasing dielectric constant.

Generalization #6:
Velocity of propagation increases slightly as microstriplines become more narrow (that is, for higher characteristic impedances).

Generalization #7:
For a given dielectric constant, as long as strip width is adjusted to hold characteristic impedance constant, propagation velocity is independent of substrate thickness.

Since the computations involved in actually determining dimensions for a particular microstripline are quite involved and often fraught with error, the above approximations not only lend themselves to a better understanding of the mechanism of microstrip, but they also provide a "test of reasonableness" for evaluating the results of a more rigorous computational analysis.

Quantifying Microstripline Behavior

A set of equations frequently encountered in the engineering literature[10] which provides a good first-order approximation of the characteristic impedance and propagation velocity of microstriplines is as follows:

$$Z_0 = \frac{377(h/W)}{\sqrt{\varepsilon_r}}$$

and

$$v = \frac{c}{\sqrt{\varepsilon_r}}$$

where W, h, and ε_r are as defined in Fig. 1, c represents the velocity of propagation of radiant energy in free space, and the number 377 is an expression for the characteristic impedance of free space in Ohms.*

Although the above for-

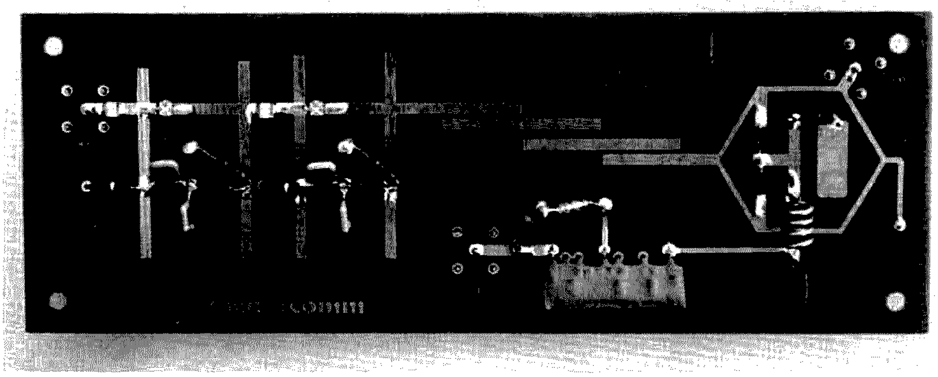

Integrated microstrip assembly. This board is a complete front end for the reception of TV signals from satellites at 2.6 GHz. Microstriplines provide matching and bias feeds for the two preamplifiers (left) and i-f amplifier (bottom right), furnish ample bandpass filtering for spurious-free reception (center), and phase rf and LO signals in a balanced mixer (far right). This particular board provides 30 dB of conversion gain, a 3 dB noise figure, and better than 20 dB of image frequency rejection. A similar unit has been used for successful ATV reception in the 2.4 GHz band.

*$Z = \sqrt{\mu/\varepsilon}$, from reference 9. Since μ_0, the permeability of free space, is approximately $4\pi \times 10^{-7}$ Henrys per meter, and ε_0, the permittivity of free space, is approximately $1/36\pi \times 10^{-9}$ Farads per meter, it can be shown that $Z_0 \approx 377\Omega$.

mulas yield results which conform to the generalizations introduced previously, they are at variance with measured data on actual microstriplines. This is because the ideal formulas assume true TEM propagation, with the conductors completely immersed in the dielectric medium, and ignore such ever-present anomalies as fringing capacitance (capacitive coupling between the microstrip and the outside world) and flux leakage (mutual inductive coupling between the strip and its surroundings). Throughout the 1950s and '60s, numerous studies were performed by Cohn, Wheeler, Sobol, Schneider, and others to more completely characterize the behavior of microstriplines under "real-world" conditions. Documentation of these investigations may be found in references 11 through 22. The calculations are involved but have enabled a number of graphical aids for the dimensioning of microstriplines to be developed.

Graphical Analysis— Wheeler's Charts

The technique most commonly used by microwave engineers to dimension microstriplines involves a set of graphs known as "Wheeler's Charts," after Harold A. Wheeler, the author of references 15 and 16. The charts, published in numerous technical journals, were not actually developed by Wheeler, but are generally based upon a set of equations derived by him. Wheeler's Charts take several forms, and may be used for determining the proper width for a microstripline of a desired characteristic impedance, for determining the resulting velocity of propagation, or both. Like any graphical design tool, Wheeler's Charts are only approximate, being limited in resolution by their finite size. Nonetheless, data derived from these charts has provided a good starting point for literally thousands of successful microwave designs.

Fig. 2 is one form of Wheeler's Chart, published for several years in the *Microwave Engineer's Handbook.*[23] From it, one can determine to a high degree of accuracy the required strip width for a desired characteristic impedance and the resulting propagation velocity (as a percentage of the speed of light) for two particular types of substrate material in three popular thicknesses. No information as to effects of trace thickness is given in this chart, but it seems to hold for 1 oz. (0.0014" thick) and 2 oz. (0.0028" thick) copperclad PC laminate.

The Wheeler's Charts in Figs. 3, 4, and 5 are more general in that they allow microstriplines to be dimensioned independently of substrate thickness or dielectric material. These charts were published a couple of years ago by Communications Transistor Corporation[24] and formed the basis of most of the microstrip dimensions presented in my various construction articles. To use Fig. 3, it is necessary to know the relative dielectric constant (ε_r) of the substrate material (its permittivity relative to that of free space). For a given characteristic impedance, the chart gives the ratio of required microstripline width to height (the dielectric thickness). Thus the required strip width is found merely by multiplying this ratio by the actual substrate thickness used, making this chart applicable to any desired substrate thickness.

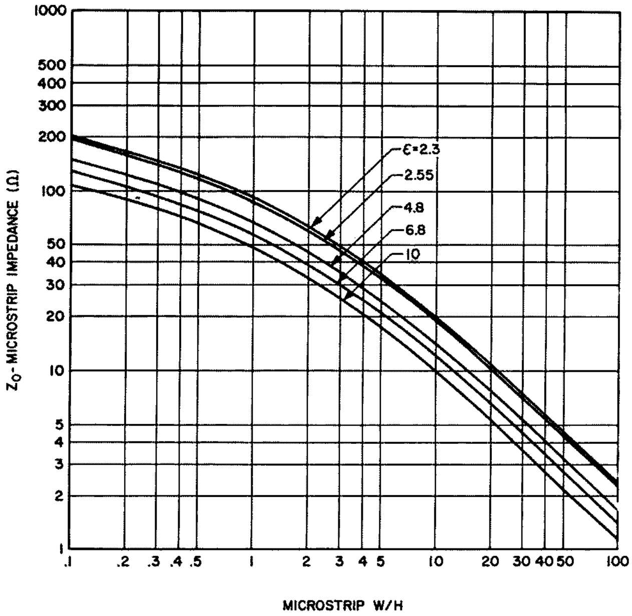

Fig. 3. Microstrip impedance versus width/height.

Figs. 4 and 5 similarly employ the width-to-height ratio of a microstrip and are used indirectly to determine propagation velocity. To understand their use, it is necessary to first introduce the parameter which the charts erroneously call relative dielectric constant, but which more properly should be referred to as effective dielectric constant, ε_{eff}.

Effective Dielectric Constant

The first-order approximations given earlier for microstripline characteristic impedance and propagation velocity would hold if the dielectric material completely surrounded the strip conductor and completely contained all magnetic and electrical lines of force. In fact, the dielectric constant of the substrate (between the strip and the ground plane) and that of the material above the strip (typically air) are sufficiently different that a sizable dielectric discontinuity exists. This is further aggravated by the fringing capacitance and magnetic flux leakage problems mentioned earlier. Now, if all these discontinuities were taken into account, a correction factor could be developed, tacked onto the textbook formulas for Z_0 and v_{rel}, and all would be well. Unfortunately, this correction factor to Z_0 is actually a function of Z_0, which is why the formulas developed by Wheeler, Sobol, Schneider, and others are so complex. But assuming the actual Z_0 of a stripline were found, and, if it were compared to the assumed Z_0 from the textbook equation, a correction factor could be derived for each particular microstripline measured. That correction factor could then be multiplied by ε_r, the permittivity of the dielectric relative to that of free space, resulting in the parameter which I call ε_{eff}, effective dielectric constant.

Since, for a given microstripline dimension, ε_{eff} encompasses all the corrections necessary for fringing capacitance, flux leakage, and dielectric discontinuity, the first-order formulas could be used if ε_{eff} were substituted for ε_r throughout. The only problem remaining is to deter-

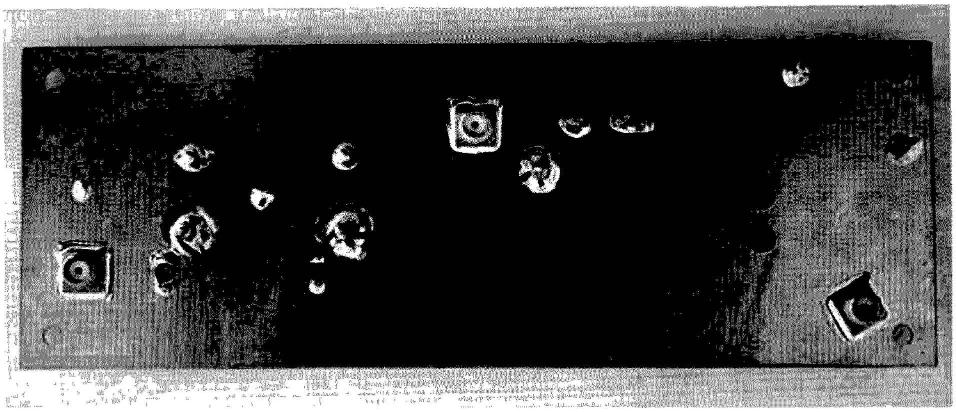

Ground plane—The "flip side" of any microstrip board remains unetched, to serve as a ground plane against which transverse electromagnetic (TEM) waves can propagate down the etched strip. It is common practice to design microstrip boards so that dc power feed-throughs and rf connectors project through the ground-plane side. When mounting coax connectors through a ground plane, as shown here, don't forget to remove a bit of the ground-plane metallization from around the center pin or you'll end up shorting out all signals!

mine the value of ε_{eff}, which leads us to another generalization.

Generalization #8:

Since all flux lines surrounding the stripline pass both through the substrate (of dielectric constant ε_r) and also through air (dielectric constant $<\varepsilon_r$), the effective dielectric constant, ε_{eff}, will always be less than ε_r.

Figs. 4 and 5 list, for various substrates of different relative dielectric constant, ε_r, the effective dielectric constant, ε_{eff}, as a function of width-to-height ratio (which was itself a function of characteristic impedance). From ε_{eff}, it is relatively easy to determine v_r, relative propagation velocity as compared to the speed of light, from the formula:

$$v_r = \frac{1}{\sqrt{\varepsilon_{eff}}}$$

Effects of Metallization Thickness

Nowhere in Wheeler's Charts is there any correction for t, the thickness of the strip conductor and ground-plane metallization. Actually, generalization #4 notwithstanding, varying the metallization thickness over a fairly wide range has virtually no effect upon the properties of the microstrip. This is because skin effect forces most of the current to flow at or near the surface of a conductor, and this effect is amplified as frequency increases. As long as the metallization thickness is sufficient to support the required current flow (and, at microwave frequencies, a few microns will suffice), circuit operation is relatively independent of trace thickness.

Yet it is important to know the metallization thickness when dimensioning microstriplines. This is so because the specified thickness of copperclad printed circuit laminates is generally inclusive of metallization thickness, but the microstripline formulas or charts require a knowledge of the substrate thickness alone.

Consider a printed circuit board 1/32" (0.79 mm) thick, double-clad with 2-ounce copper. The copper thickness will be 0.0028" (0.071 mm) on each side, leaving only 0.65 mm of dielectric thickness. Obviously, any microstripline calculation which ignores metallization thickness, and assumes a 0.79 mm dielectric, will be in error.

As mentioned previously, Fig. 2 seems to provide adequate results with either 1- or 2-ounce copper thickness. Nonetheless, when utilizing the width-to-height ratios of Figs. 3, 4, or 5, or any time high precision is required, the actual metallization thickness should be taken into account when determining the height, h, of a microstrip above the ground plane.

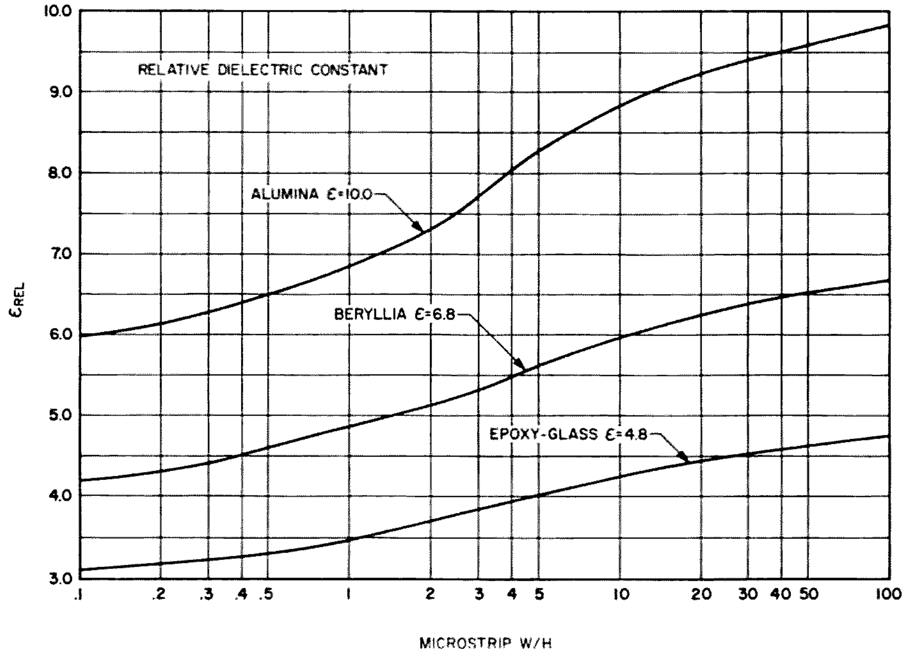

Fig. 4.

Characteristic Impedance Limitations

There is a finite range of widths (hence characteristic impedances) over which an etched microstrip will perform as a TEM transmission line. As a line becomes very wide, its capacitance per unit

length becomes so great as to completely dominate its behavior. The inductance per unit length becoming insignificant, the line can no longer behave as a transmission line, but rather forms a lumped shunting capacitance to ground. This transition begins to occur when the width of the strip exceeds about 10 times its height above the ground plane. Similarly, for very narrow lines, the capacitance per unit length becomes insignificant, the inductance per unit length predominates, and the line no longer supports TEM propagation but instead degenerates to a series inductor. This transition seems to occur when the height of the strip above ground exceeds the strip's width by about a factor of ten.

From Fig. 3, it can be seen that the above limitations tend to restrict the useful range of microstripline characteristic impedances to about 15 to 150 Ohms. Needless to say, the ability to construct TEM transmission lines of any desired characteristic impedance between these two extremes is hardly a severe limitation and will likely accommodate just about any design requirement.

Length Limitations

Microstriplines which are very short relative to their width similarly tend to act as shunt capacitances rather than transmission lines. This occurs because the signal, rather than propagating along the length of the line, actually propagates from the center of the line out toward the edges. It is apparent that with signals traveling in this direction, they are no longer perpendicular to the magnetic and electric fields, so the strip no longer acts as a TEM transmission line.

As a rule, no microstripline should be designed into a circuit such that its width exceeds its length. In circuits requiring a short electrical length of transmission line, a certain amount of ingenuity is required. In many applications, it is possible to take advantage of the property of repeating impedances at half-wave intervals. For example, if a circuit should require a shunt 0.1-wavelength transmission line, but if the frequency were sufficently high to make the microstripline short relative to its width, a 0.6-wavelength transmission line may well suffice.

In applications where it is not practical to add an integral half wavelength to the transmission line, it may be possible to design with a longer transmission line of some other impedance or perhaps a short length of transmission line with a higher characteristic impedance (hence narrower strip width). Where such circuit modifications are not possible, it may be necessary to redesign the circuit onto a thinner substrate. This has the effect of reducing the width of all microstriplines in the circuit.

Since attenuation in a microstripline, as in any transmission medium, is a direct function of transmission line length, it should be obvious in designing circuits that no line should be made longer than absolutely necessary. An exception is the use of long, lossy sections of transmission line as attenuators in a circuit.

Selecting Stripline Laminates

Throughout the microwave industry, the use of such prosaic materials as fiberglass-epoxy printed circuit board as microstripline laminates is met with scorn. Nonetheless, I have

	1/32" TFE, 1 oz Cu			1/16" TFE, 1 oz Cu		
Z_0	W	ε_{eff}	v/v_0	W	ε_{eff}	v/v_0
15	.377	2.35	.65	.791	2.34	.65
20	.268	2.29	.66	.564	2.29	.66
25	.204	2.25	.67	.429	2.25	.67
30	.162	2.21	.67	.340	2.21	.67
35	.132	2.18	.68	.277	2.18	.68
40	.109	2.16	.68	.231	2.15	.68
45	.092	2.13	.68	.195	2.13	.68
50	.079	2.11	.69	.166	2.11	.69
60	.059	2.07	.70	.124	2.07	.70
70	.045	2.03	.70	.095	2.03	.70
80	.035	2.00	.71	.074	2.00	.71
90	.028	1.97	.71	.059	1.98	.71
100	.022	1.95	.72	.047	1.95	.72
110	.018	1.92	.72	.038	1.92	.72
120	.014	1.91	.72	.030	1.91	.72
130	.011	1.90	.72	.024	1.91	.72
140	.009	1.90	.73	.019	1.90	.73
150	.007	1.89	.73	.015	1.89	.73

Table 1: Width (in decimal inches), effective dielectric constant, and velocity factor for various characteristic impedance microstriplines etched on two different thicknesses of fluorocarbon-dielectric (ε_r = 2.55) printed circuit stock, double-clad with 1 oz. copper. This table is also applicable to various low-dielectric-constant polyolefin and glass-derived printed circuit materials, as discussed in the text.

achieved a reasonable degree of success with microstriplines on such inexpensive circuit stock, as reported in my previous articles.

The attitude of the industry is not without some basis, as process controls in the manufacture of garden-variety glass-epoxy PC board are somewhat lacking. The laminate thickness and dielectric constant will vary widely between vendors and for different production runs of board from the same manufacturer, as reported by Motorola.[25] Nonetheless, it is possible to design the circuit to be forgiving of such anomalies, especially if variable tuning elements are incorporated in the circuit for impedance matching. Further, Sobol's microstrip equations (reference 18) permit strips to be dimensioned for any board thickness and dielectric constant encountered, as long as the material to be used is measured.

Whenever I purchase a quantity of glass-epoxy circuit board, I make it a point to strip back the metallization on both sides of a sample and measure the actual dielectric thickness. I have never observed deviations from optimum of more than a few percent, so the manufacturer's published thickness is probably close enough for dimensioning striplines. As for relative dielectric constant, ε_r, I measure it by determining the capacitance of a scrap of double-sided laminate whose dimensions are precisely known. This is most easily done on an automatic RCL bridge, but any available capacitance-checker should suffice. Dielectric constant is then found from the formula:

$$\varepsilon_r = \frac{hC}{8.85A}$$

where C is capacitance in pF, h is dielectric thickness in meters, and A is the area of either plate in square meters.

If the resulting dielectric constant is reasonably close to the theoretical 4.8 for fiberglass-epoxy PC board, go ahead and design

Z_0	1/32" glass-epoxy 1 oz. Cu W	ε_{eff}	v/v_0	1/16" glass-epoxy 1 oz. Cu W	ε_{eff}	v/v_0
15	.262	4.15	.49	.551	4.15	.49
20	.184	4.01	.50	.387	4.01	.50
25	.138	3.91	.51	.290	3.91	.51
30	.107	3.82	.51	.226	3.82	.51
35	.086	3.74	.52	.181	3.74	.52
40	.070	3.68	.52	.148	3.68	.52
45	.058	3.61	.53	.123	3.62	.53
50	.048	3.55	.53	.103	3.56	.53
60	.034	3.45	.54	.074	3.46	.54
70	.026	3.37	.54	.055	3.37	.54
80	.019	3.28	.55	.041	3.29	.55
90	.014	3.23	.56	.031	3.24	.56
100	.011	3.22	.56	.023	3.22	.56
110	.008	3.20	.56	.017	3.20	.56
120	.006	3.18	.56	.013	3.18	.56
130	.004	3.15	.56	.010	3.16	.56
140	.003	3.13	.56	.007	3.14	.56
150	.002	3.11	.57	.005	3.12	.57

Table 2. Width (in decimal inches), effective dielectric constant, and velocity factor for various characteristic impedance microstriplines, etched on two different thicknesses of fiberglass-epoxy dielectric ($\varepsilon_r = 4.8$) printed circuit stock, double-clad with 1 oz. copper.

microstriplines from Wheeler's Charts or from the tables included in this article. If not, you have the option of selecting another batch of PC stock and trying again or designing your strip dimensions around the actual ε_r of the material on hand.

The majority of commercial microstripline users employ a type of circuit board exhibiting tightly controlled dielectric properties. Traditional materials include fluorocarbon laminates (such as Teflon, a DuPont trade name for tetra-fluoro-ethylene), polyolefins (such as polyethylene), or glass derivatives such as "duroid" or "rexolite." All of these materials exhibit a much lower dielectric constant than fiberglass-epoxy (on the order of 2.5, as opposed to 4.8), which results in wider, longer striplines—a decided advantage at higher frequencies where strips might otherwise become so short as to be unmanageable. Although these stripline laminates are quite a bit more costly than glass-epoxy, they offer exceptionally consistent properties and excellent performance well beyond ten GHz. Glass-epoxy, on the other hand, is only marginally useful at 2300 MHz and becomes extremely lossy beyond 3 GHz.

Military and aerospace microwave circuitry is frequently fabricated by depositing gold traces on a ceramic substrate of highly controlled dimensions and dielectric properties. The most popular of these substrates is alumina, which has an extremely high dielectric constant (around 10). The very high ε_r considerably reduces microstripline dimensions, which is a definite asset in high-density applications such as microwave integrated circuits, although it greatly increases the dimensional precision required both in design and fabrication. Until recently, such high-ε_r materials were completely beyond the reach of the average experimenter. A new microstripline laminate from 3M Company, called εpsilam 10, promises to change that. This board has a ceramic-impregnated dielectric material whose dielectric properties match those of alumina, but which can be machined like conventional printed circuit material. The board is supplied double-clad with 1-ounce copper and can be etched with either ferric chloride or chromic-sulphuric acid. Although the cost is quite high (on the order of $1 per square inch), εpsilam 10 promises to make high-density techniques available to the interested microwave amateur without requiring investment in exotic processing equipment.

Introducing Sobol's Tables

Wheeler's Charts, as seen in Figs. 2 through 5, provide a convenient technique for determining microstripline dimensions for a desired characteristic impedance and electrical length. However, it is frequently more convenient to have this information available in tabular form, especially when a limited number of standard dielectric types and thicknesses are used. I recently developed a set of such tables for finding width, effective dielectric constant, and velocity factor of microstriplines over a wide range of characteristic impedances for six different frequently-encountered laminates.

Since the calculations are quite involved, require multiple iterations and conditional branching, and include parameters which are interactive, it was decided to employ a programmable pocket calculator (in this case, the Hewlett-Packard Model 25). From a wide field of available equation sets, I selected Sobol's equations from reference 18, primarily because they lent themselves to entry within the limitations of my calculator's 49-step program capacity.* The calculator programs are available to anyone interested in such

Z_0	.025" alumina deposited gold traces W	ε_{eff}	v/v_0	.050" alumina deposited gold traces W	ε_{eff}	v/v_0
15	.146	8.28	.35	.293	8.29	.35
20	.100	7.95	.35	.201	7.96	.35
25	.073	7.69	.36	.146	7.69	.36
30	.055	7.46	.37	.111	7.46	.37
35	.043	7.26	.37	.086	7.26	.37
40	.033	7.06	.38	.068	7.09	.38
45	.026	6.89	.38	.054	6.91	.38
50	.022	6.77	.38	.045	6.78	.38
60	.015	6.50	.39	.030	6.50	.39
70	.010	6.43	.39	.020	6.43	.39
80	.006	6.35	.40	.013	6.36	.40
90	.004	6.28	.40	.009	6.30	.40
100	.003	6.24	.40	.006	6.24	.40
110	.002	6.18	.40	.004	6.18	.40
120	.001	6.07	.41	.002	6.07	.41
130				.001	5.97	.41

Table 3. Width (in decimal inches), effective dielectric constant, and velocity factor for various characteristic impedance microstriplines of gold traces deposited on two different thicknesses of alumina ($\varepsilon_r = 10.3$) substrate. This table is also applicable to the new 3M brand "εpsilam 10" high-dielectric-constant printed circuit stock, as discussed in the text.

*It is recognized that Sobol's equations, having been derived more than a decade ago, are less precise than others published more recently. However, since the errors in microstripline dimensions utilizing Sobol's equations seldom exceed a few percent, they are considered entirely satisfactory for amateur (if not government) work.

calculations,* but the results are presented in Tables 1, 2, and 3.

I had actually intended to name these tables after myself. After all, a great deal of time and effort went into writing the programs and computing the data. Then I had the unexpected pleasure of meeting Dr. Harold Sobol for the first time, at a recent International Microwave Symposium. I found Hal to be stimulating, personable, enjoyable—a "gentleman and a scholar" in the true sense of the expression. Thus I decided that the tables which I am presenting here, like Wheeler's Charts, should be named after the person who derived the formulas, rather than the person who applied them in a convenient form.

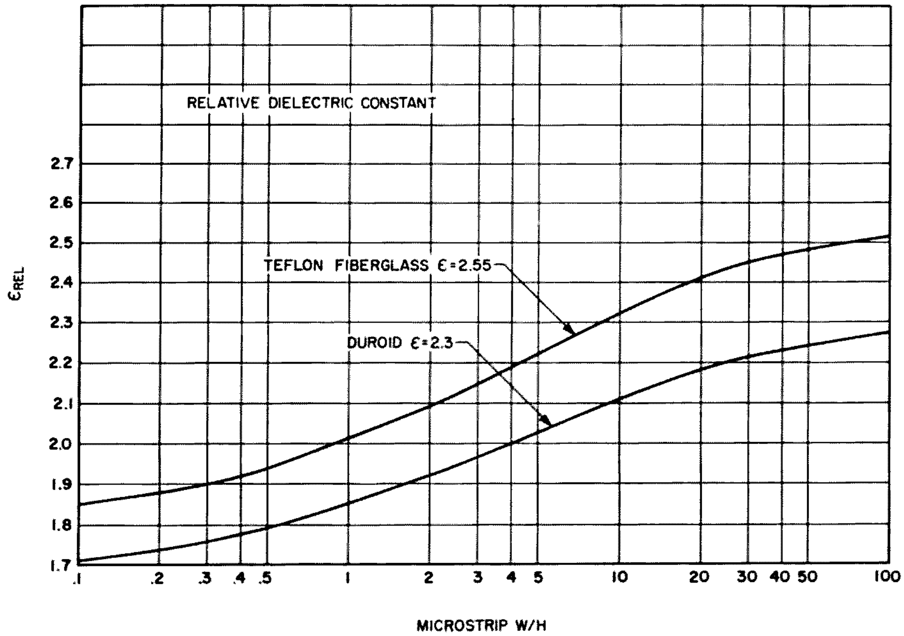

Fig. 5.

Conclusion

Microstrip transmission lines lend themselves to the design of impedance matching networks, coupling structures, and reactive circuit elements. Their usefulness extends from the VHF region far into the microwave spectrum. This article has presented several generalizations about the dimensioning of microstriplines, which may be verified by examining Sobol's Tables (Tables 1 through 3).

Actual dimensions for microstrip transmission lines of a desired characteristic impedance and electrical length can be determined graphically, from tables, or with the aid of a programmable calculator. Try microstripline for your next microwave design or construction project. It's simpler than you realized and more rewarding than you can imagine! ■

*The HP-25 programs used to develop Tables 1 through 3 form a part of a microwave design program library developed by the author and are available for a nominal charge. For details, send a stamped self-addressed envelope to Microcomm, 14908 Sandy Lane, San Jose CA 95124.

References

1. H. Paul Shuch WA6UAM, "Microstripline Preamplifiers for 1296 MHz," *Ham Radio*, April, 1975, p. 12.
2. H. Paul Shuch WA6UAM, "Low Cost 1296 MHz Preamplifier," *Ham Radio*, October, 1975, p. 42.
3. H. Paul Shuch WA6UAM, "How to Use Double Balanced Mixers on 1296 MHz," *Ham Radio*, July, 1975, p. 8.
4. H. Paul Shuch WA6UAM, "Rat-Race Balanced Mixer for 1296 MHz," *Ham Radio*, July, 1977, p. 33.
5. H. Paul Shuch WA6UAM, "Packaging for UHF DIP Double-Balanced Mixers," *Ham Radio*, October, 1977, p. 41.
6. H. Paul Shuch WA6UAM, "Microstripline Bandpass Filters for 1296 MHz," *Ham Radio*, December, 1975, p. 46.
7. H. Paul Shuch WA6UAM, "High Performance Conversion Module for the 23 cm Band," *Radio Handbook*, 20th edition, Howard W. Sams, Indianapolis IN, 1975, p. 20-66.
8. H. Paul Shuch WA6UAM, "Solid-State Microwave Amplifier Design," *Ham Radio*, October, 1976, p. 40.
9. A. L. Lance, *Introduction to Microwave Theory and Measurements*, McGraw-Hill, Inc., 1964, ch. 1.
10. *Reference Data for Radio Engineers*, Fifth Edition, Howard W. Sams, Indianapolis IN, 1972, p. 22-25.
11. D. D. Grieg and F. H. Englemann, "Microstrip—A New Transmission Technique for the Kilomegacycle Range," *Proceedings of the IRE*, December, 1952, p. 1644.
12. S. B. Cohn, "Characteristic Impedance of the Shielded-Strip Transmission Line," *IRE Transactions on Microwave Theory and Techniques*, July, 1954, p. 52.
13. S. B. Cohn, "Shielded Coupled-Strip Transmission Line," *IRE Transactions on Microwave Theory and Techniques*, October, 1955, p. 29.
14. Tai Tsun Wu, "Theory of the Microstrip," *Journal of Applied Physics*, March, 1957, p. 299.
15. H. A. Wheeler, "Transmission-Line Properties of Parallel Wide Strips by a Conformal-Mapping Approximation," *IEEE Transactions on Microwave Theory and Techniques*, May, 1964, p. 280.
16. H. A. Wheeler, "Transmission-Line Properties of Parallel Strips Separated by a Dielectric Sheet," *IEEE Transactions on Microwave Theory and Techniques*, March, 1965, p. 172.
17. H. Caulton, J. J. Hughes, and H. Sobol, "Measurements on the Properties of Microstrip Transmission Lines for Microwave integrated Circuits," *RCA Review*, September, 1966, p. 377.
18. H. Sobol, "Extending IC Technology to Microwave Equipment," *Electronics*, March 20, 1967, p. 112.
19. P. Silvester, "TEM Wave Properties of Microstrip Transmission Lines," *Proc. IEE* (London), January, 1968, p. 43.
20. E. Yamashita and R. Mittra, "Variational Method for the Analysis of Microstrip Lines," *IEEE Transactions on Microwave Theory and Techniques*, April, 1968, p. 251.
21. T. G. Bryant and J. A. Weiss, "Parameters of Microstrip Lines and of Coupled Pairs of Microstrip Lines," *IEEE Transactions on Microwave Theory and Techniques*, December, 1968, p. 1021.
22. M. V. Schneider, "Microstrip Lines for Microwave Integrated Circuits," *Bell System Technical Journal*, June, 1969, p. 1421.
23. *Microwave Engineer's Handbook and Buyer's Guide*, Horizon House, Inc., 1964, p. 90.
24. "Design Charts to Aid in RF Power Amplifier Design," Communications Transistor Corp., San Carlos CA, pp. 6-8.
25. Glenn Young, *Application Note AN-578*, Motorola Semiconductor Products, Phoenix AZ, 1973.

FCC

Before the Federal Communications Commission Washington DC 20554 In the Matter of Deregulation of Part 97 of the Commission's Rules regarding emissions authorized in the Amateur Radio Service Docket 20777
RM-1429 RM-2163
RM-2170 RM-2330
RM-2429 RM-2507
RM-2545 RM-2550

SECOND REPORT AND ORDER
Adopted: August 8, 1978; Released: August 18, 1978
By the Commission: Commissioner Washburn absent.

1. A Notice of Proposed Rulemaking in Docket 20777, concerning the types of radio emissions that are permitted in the Amateur Radio Service, was released April 22, 1976, and published in the *Federal Register* on April 28, 1976 (41 FR 17789). A First Report and Order was released on March 10, 1977, and published in the *Federal Register* on March 15, 1977 (42 FR 14111). In the First Report and Order, the Commission adopted regulations regarding the purity of emissions in the Amateur Radio Service. The regulations adopted conformed to the international standards of *emission purity. This Second* Report and Order will deal with the major issue of Docket 20777, authorized bandwidth.

WHAT DID THE COMMISSION PROPOSE?

2. The Notice of Proposed Rulemaking in Docket 20777 was concerned with the types of radio emissions that are permitted in the Amateur Radio Service. At present, when an amateur wishes to use a certain type of emission (such as telephony, telegraphy, or television) he must refer to the emissions table and see that he may use telephony in the 14.20 to 14.35 MHz range, but not in the 14.00 to 14.20 MHz range.

3. The Commission has received from the amateur community in the last few years a number of petitions which propose to enlarge the frequency ranges which are available for various types of emissions, or allow various kinds of emissions which are not specifically provided for in the amateur emissions table. Rather than deal with each suggested emission change individually, the Commission, in its Notice of Proposed Rulemaking in Docket 20777, proposed to delete the emissions table entirely, and substitute a table of maximum authorized bandwidths. A *table of maximum authorized band*widths would permit any type or mode of emission to be used by an amateur, so long as the occupied bandwidth of that emission did not exceed the limits on the bandwidth established for that frequency. For example, if was proposed that when using the frequency segment 28.50 to 29.70 MHz, the maximum authorized bandwidth would be 35 kHz. That means that any emission whatsoever would be permitted in that frequency range so long as the emission did not occupy more than 35 kHz of the spectrum. It was felt that such a deregulation would provide the freedom for amateurs to experiment with many new and unusual emission types, or use well-known emission types in new areas of the spectrum.

WHAT DID THE COMMENTS SAY?

4. A total of 333 persons and 8 clubs filed comments. In addition, 23 petitions were filed as comments. Numerous commenters raised objections to our proposals. For example, the maximum bandwidth table, as proposed, would not permit any emission type whose bandwidth was greater than 3.5 kHz to be used below 28.5 MHz. This would have the effect of banning in the lower amateur bands the use of double sideband (AM) telephony, which requires 6 kHz. Although efficient use of the spectrum would be encouraged, the comments indicated that this rule change would force many amateurs to convert to new equipment at a very considerable expense. Additionally, the privilege to utilize any type or mode of emission carries with it the responsibility of accurately measuring the bandwidth of these. Many commenters argued that they would have to either build, or buy, the equipment necessary to measure their signal's bandwidth.

WHAT ACTION IS THE COMMISSION TAKING?

5. The comments indicated that for the sizable portion of the amateur community who do not experiment, the present emissions table is preferable. Accordingly, the Commission will not adopt the proposed maximum bandwidth table. We are disappointed that the comments on our proposal were unfavorable, because we continue to believe deregulation is a sound idea. This proposed new bandwidth table would have given the Amateur Radio Service a new opportunity to fulfill one of its bases and purposes, "advancement of the *radio art," by allowing the amateur* the freedom to experiment with new emissions. However, many commenters disagreed with the bandwidth concept because of the added cost and responsibility they said it would place on amateurs. This loses sight of the concept that amateurs should be in the forefront of technical advancement, and that any attempt by the Commission to spur amateur experimentation will necessarily increase amateur responsibility. The Commission will continue to consider ways of introducing further deregulation and simplification in the Amateur Radio Service.

6. One major issue on which there was general agreement in the comments was the need for the Amateur Rules to be amended to permit the use of ASCII—the American National Standard Code for Information Interchange. *At present, the use of ASCII* is prohibited. Section 97.69 of the Amateur Rules, the Section governing radio teleprinter signals, permits the use of the Baudot code only. In the Notice of Proposed Rulemaking in this proceeding, the Commission proposed to delete Section 97.69, thereby giving amateurs the freedom to choose any type of radio teleprinter code so long as the signal used was kept within the proposed maximum bandwidths. This proposal brought many favorable comments

because such action would make the use of ASCII permissible for amateurs. We agree that ASCII should be an authorized emission for amateur radio stations. However, because we are not adopting the proposed maximum authorized bandwidth table, it may be necessary to introduce certain technical standards concerning the use of ASCII. Since technical standards have never been the subject of public commenting, we feel it would be inappropriate to adopt ASCII standards without further public input. Therefore, the Commission today is adopting a Further Notice of Proposed Rulemaking in Docket 20777 to consider the appropriate standards for the use of ASCII in the Amateur Radio Service.

7. Finally, we are dismissing with this Report and Order those rulemaking petitions associated with this docket which deal with the authorized emissions portion of this proceeding. In addition, two rulemaking petitions not originally associated with this docket are being dismissed because the issues they raise are addressed by this docket. RM-2076, submitted by George Bonadio, would authorize simultaneous voice and facsimile transmissions in all amateur subbands in which A3 and F3 emissions are permissible. RM-2770, submitted by Mr. Robert J. Roehrig of Batavia, Illinois, petitions for free experimentation with all emissions in amateur radio within properly set bandwidth limitations.

8. Accordingly, in view of the foregoing, IT IS ORDERED that RM-1429, RM-2163, RM-2076, RM-2170, RM-2330, RM-2507, and RM-2770, RM-2545 to the extent that these petitions have not been granted, ARE DISMISSED. IT IS FURTHER ORDERED that this proceeding IS CONTINUED.

FEDERAL COMMUNICATIONS COMMISSION
William J. Tricarico
Secretary

Before the
Federal Communications Commission
Washington DC 20554
In the Matter of
Deregulation of Part 97 of the Commission's Rules regarding emissions authorized in the Amateur Radio Service

Docket 20777
RM-2429
RM-2550
RM-2771

NOTICE OF INQUIRY AND FURTHER NOTICE OF PROPOSED RULEMAKING
Adoped: August 8, 1978;
Released: August 18, 1978
By the Commission: Commissioner Washburn absent.

1. The Commission gives notice that it proposes to authorize the use of the American National Standard Code for Information Interchange

(ASCII) in the Amateur Radio Service.

WHAT IS THE BACKGROUND OF THIS PROCEEDING?

2. In the Notice of Proposed Rulemaking in this proceeding, released April 22, 1976, and published in the *Federal Register* on April 28, 1976 (41 FR 17789), the Commission proposed to substitute a maximum authorized bandwidth table for the present emission table in the amateur rules. This would mean that instead of limiting the types of emissions an amateur could use to the types listed in the emissions table, an amateur might use any type of emission so long as the occupied bandwidth of the emission was within the maximum bandwidth proposed for the particular frequency being used. As part of that original proposal, the Commission also proposed to remove all rules concerning radio teleprinter signals, proposing to give amateurs the freedom to choose any type of radio teleprinter code so long as the signal was kept within the proposed maximum bandwidth.

3. In the Second Report and Order in this proceeding adopted today, the Commission decided not to adopt the proposed maximum authorized bandwidth table, but noted that the proposal to remove the rules concerning radio teleprinter signals had met with a very favorable response mainly because that action would make it possible for amateurs to use a code of information interchange known as ASCII. The Commission felt that ASCII should be authorized for amateur radio operators, but that to adopt a rule with specific ASCII standards would be inappropriate because no standards for ASCII were proposed in the original docket (the proposal, as stated above, was simply to delete the rule section on radio teleprinter signals), and no opportunity for commenting on specific ASCII standards was given the public. We are, therefore, in this combined Notice, addressing this topic of ASCII standards for Rule Part 97.

WHAT IS ASCII?

4. ASCII is a code for the exchange of information. It stands for the American National Standard Code for Information Interchange. Each character in the code is comprised of seven binary data bits, each bit being either "0" or "1". For example, 0100101 represents the character "R" in ASCII.

5. At present, the use of ASCII is not permissible in the Amateur Radio Service. Section 97.69(a) of the Amateur Rules requires that the transmission of radio teleprinter signals must be done by means of "a single channel five-unit (start-stop) teleprinter code." This is the Baudot code, which is the only code recognized by the Commission for amateur transmissions. In recent years, however, ASCII has replaced the Baudot code as the most popular code for information exchange in use today. Its popularity is due in part to the fact that a seven-unit code has a capacity for 128 different characters (2^7 = 128), whereas Baudot, a five-unit code, is limited to 32 characters (2^5 = 32), or 64 characters when upper and lower case characters are used. ASCII has been officially adopted by the National Bureau of Standards as the standard code for information interchange in the United States. The comments we received in response to our proposal to deregulate the amateur rules on radio teleprinter signals centered almost exclusively on the practical effect that this would make ASCII available for use by amateurs.

WHAT STANDARDS ARE WE CONSIDERING?

6. *Data Transmission Rate.* One of the main differences between ASCII and Baudot is that ASCII is commonly sent at speeds far greater than Baudot. In ASCII and in Baudot, the baud is the rate of data transmission, and represents the number of data bits sent in one second. The four standard baud rates recognized by the Commission for amateur Baudot are 45, 50, 56.25, and 75 baud. In contrast to this, the standard baud rates recognized by the American National Standards Institute for ASCII are 110, 150, 300, 600, 1200, 2400, 4800, 9600, and 19,200 baud, and even higher. The concern of the Commission with these higher speeds is the bandwidth that these transmissions would occupy. The questions which the Commission would like the comments to address are:

a. Should technical limitations be placed on the use of ASCII in the Amateur Radio Service?

b. If yes, should limitations be placed by reference to occupied bandwidth? data transmission rate? emission type?

c. If limitations are placed on the bandwidth that a transmission using ASCII occupies, what should the maximum bandwidth be for each amateur frequency band?

d. If limitations are placed on the data transmission rates, should there be standard operating speeds similar to those established by the American National Standards Institute, or maximum speeds (such as "a speed no greater than 3000 baud")?

e. If standard operating speeds are required, what should be the standard speeds for each amateur frequency band? What should the permissible tolerance from the standard operating speeds be?

f. If maximum speeds are used, what should be the maximum speed for each amateur frequency band?

g. Should any limitations be placed on the emission types used in transmitting ASCII?

h. If yes, what should the permissible deviation from the mark signal to the space signal be for frequency-shift keying? Should the permissible deviation be related to data transmission rates?

i. What should the highest permissible fundamental modulating audio frequency be for A2 or F2 emissions? Should this standard be related to data transmission rate?

7. *Use of Parity Bit.* ASCII itself is merely a seven-unit code, but the method of sending that code can vary in a number of ways. The first way it can vary is in the use of a parity bit. A parity bit is sometimes employed to assure that each character sent is received correctly. For example, taking the character "R", which we described above as 0100101, and assuming the two parties to the communication have agreed that the parity bit shall be "even," the person sending the character "R" will also send an eighth bit, a parity bit, and the transmission will look like this: 01001011. Because the two parties agreed that parity would in this case be "even," the receiver of the communication would see that the number of data bits represented by the number "1" was even, and that the character was received correctly. If, for some reason, the parity bit made the number of data bits represented by the number "1" odd, the receiver of the communication would recognize that there was a mistake in the reception of that particular character.

8. In using the parity bit, the two parties to the communication have the option of determining whether the parity bit shall be "even" or "odd." The two parties could also agree not to send a parity bit. Finally, the two parties could agree to send an eighth signal bit, most commonly "0", which would not be used as a parity bit. This would not aid accuracy, but would be necessary if the receiver of the message is expecting an eight-unit code. The questions which the Commission would like the comments to address is:

j. What standards, if any, on the use of parity should be adopted for amateur use of ASCII?

9. *Synchronous-asynchronous.* ASCII may be sent either in a synchronous mode or an asynchronous mode. Either mode is designed to tell the receiving station when information is about to be sent. In an asynchronous transmission, there is a bit added to the beginning and end of each character. The bit added to the beginning of the character, most commonly "0", is the start bit, and tells the receiving station that a character code will follow. The bit added to the end of the character, most commonly "1", is the stop bit, and tells the receiving station to end operation until it gets another start bit. Each character therefore, in an asynchronous transmission, is sent in a 10 bit code.[1] For example, the character "R", using even parity and an asynchronous transmission, now looks like this:

0010010111
start "R" parity stop

10. In a synchronous transmission, there is no start or stop bit added to each character. Rather, there is a start character which is sent at the beginning of the message, and it is followed by a steady stream of data bits until a stop character is transmitted telling the receiving station the message is ended until another start character is sent. Because the receiving station was synchronized with the sending station by the start character, it can break down the data stream which followed the start character into segments of eight units (seven units plus parity) for translation into characters and, eventually, the information being exchanged. The successful transmission of the data, therefore, depends on the two stations being synchronized by the start character. The question which the Commission would like the comments to address is:

k. Should both asynchronous and synchronous transmission be authorized for amateur use of ASCII?

11. *Least Significant Bit-Most Significant Bit.* Within any one character the bits are identified by $b_7, b_6 \ldots b_1$, where b_7 is the highest order, or most significant bit, and b_1 is the lowest order, or least significant bit. The most common method of sending data bits is in the order of least significant bit to most significant bit. It is conceivable, however, that two stations might make a different arrangement and send the data bits in a different order. For example, the character "R" which we have been following is 0100101 in the order of least significant bit to most significant bit, but becomes 1010010 in the order of most significant bit to least significant bit. A station not expecting a deviation from the commonly used order of transmitting data bits would not be able to translate the message. The question which the Commission would like the comments to address is:

l. Should standards be adopted determining the order of the data bits?

12. We are associating with this docket RM-2771, submitted by Bruce Brown of Alexandria, Virginia, which petitions for the authorization of ASCII in the Amateur Radio Service. Mr. Brown's petition was filed subsequent to the original Notice of Proposed Rulemaking in this proceeding and we find it appropriate to associate it with this docket at this time.

13. Authority for our Notice of Inquiry and Further Notice of Proposed Rulemaking is contained in Sections 4(i), 303, and 403 of the Communications Act of 1934, as amended. We invite interested parties to submit comments concerning the proposal and/or inquiry on or before November 15, 1978, and reply comments on or before December 15, 1978. An original and five copies of all comments and reply comments shall be furnished the Commission, pursuant to Section 1.419 of the Rules. Respondents wishing each Commissioner to have a personal copy of the comments may submit an additional six copies. Members of the public wishing to express interest in our proposals but unable to provide the required copies may participate informally by submitting one copy of their comments, without regard to form, provided the correct docket number is specified in the heading of the comments. All comments and reply comments filed in this proceeding should be sent to the Secretary, Federal Communications Commission, Washington DC 20554.

FEDERAL COMMUNICATIONS COMMISSION
William J. Tricarico
Secretary

[1]Sometimes 11 bits are used, where, to ensure accuracy in an asynchronous transmission, two stop bits are sent at the end of each character.

Ham Help

Is there a company or a known individual who can or will custom-design a solid state circuit for a person such as myself for either their own use or for a possible future patentable idea/design? I am one of the "tube-type" school who quit design and application when s/s was beginning, and, try as I will, I just cannot use it. The devices or circuits are not complicated or unusual, but they are beyond my knowledge.

I would appreciate it greatly if anyone could advise me as to a company or an individual who could assist me.

J. H. Burgess K4HNW
Route 13, Box 42
Morgan LaFee Lane
Fort Myers FL 33901

I would greatly appreciate information from anyone who has successfully modified an old Hallicrafters HT-30 SSB transmitter to include the 15 meter band. In addition, I would like to increase the power output.

Paul Ellis WA6JVH
419 Bellevue St.
Santa Cruz CA 95060

I am trying to obtain the schematic and service manual for an HW-7/HW-8.

Wieslaw Dyduch SP1EYG
PL—70 965 Szczecin—5
Box 91
Poland

Social Events

EBENSBURG PA
OCT 1

The Conemaugh Valley Amateur Radio Club and the Laurel Mountain VHF Society will hold its annual hamfest on Sunday, October 1, 1978, at the Ebensburg Fairgrounds in Ebensburg, Pennsylvania. Food and refreshments will be available as well as large outdoor and indoor flea markets and displays with ample parking. There will be terrific prizes and a nominal admission charge. For information, contact David Knepper W3BJZ, Box 43, Sidman PA 15955.

WARRINGTON PA
OCT 1

The Mt. Airy VHF Radio Club (the Packrats) will hold Hamarama 78 on Sunday, October 1, 1978, 8:00 am to 4:00 pm, rain or shine; registration $2.00, tailgating $2.00/space (bring your own table). Talk-in on 146.52 MHz. Advance registration to the Mid-Atlantic States VHF Conference includes admission to Hamarama 78. For information, contact Ron Whitsel WA3AXV, Chairman, PO Box 353, Southampton PA 18966; (215)-355-5730.

BERRIEN SPRINGS MI
OCT 1

The Blossomland annual fall Swap-Shop will be held Sunday, October 1, 1978, at the Berrien County Youth Fair Grounds, Berrien Springs, Michigan. There will be large and convenient facilities, prizes, refreshments, and fun.

Open all night for set up. Table space restricted to radio and electronic items. Advance ticket donation is $1.50; tables $2.00. Talk-in on .22/.82 and .94. For further info, write John Sullivan, PO Box 345, St. Joseph MI 49085. Make checks payable to Blossomland Hamfest.

LANSING MI
OCT 1

The Central Michigan Amateur Radio Club and the Lansing Repeater Association will hold a Swap and Shop on Sunday, October 1, 1978 at the Grand Ledge High School, 950 Jenne Street, Lansing, Michigan. The school is located 6 blocks north of M-43, 7 miles west of Lansing. There will be prizes and also food and tables available. Talk-in on .34/.94 and .22/.82. For additional information, contact the Lansing Repeater Associaton, PO Box 10073, Lansing MI 48901, or phone (517)-321-2765.

BLUEFIELD WV
OCT 5

On Thursday, October 5, 1978, the Office of Continuing Education and Department of Computer Science at Bluefield State College will sponsor southern West Virginia's first seminar and exhibition of the business and engineering application of mini/microcomputers. The seminar will be conducted by Mr. William Parks, of Walters State Community College, and members of our own computer science staff. Plans are being made to host approximately 20 exhibitors, although more will be welcomed. The seminar will be conducted in the morning and afternoon, while the exhibit will be open in the afternoon and evening. There is a $15.00 fee for both seminar participants and exhibitors. For further information, contact Dr. Alvin Hall, Director of Continuing Education, Bluefield State College, Bluefield WV 24701, or phone (304)-325-7102.

SYRACUSE NY
OCT 7

The Radio Amateurs of Greater Syracuse (New York) will host their 14th annual hamfest at the New York State Fair Grounds, Arts and Home Center, Syracuse NY, on Saturday, October 7, from 9 am to 6 pm. There will be exhibitor booths, indoor and outdoor flea markets, awards, films, an organ concert, and ladies' programs. Refreshments available on the grounds. Tickets before October 1st are $1.50, or $2.00 at the gate. Children under age 12 are free. Overnight and trailer parking is available. Talk-in on 90/30-31/91. For tickets or information write R.A.G.S., PO Box 88, Liverpool NY 13088.

ASHEVILLE NC
OCT 7

The Western Carolina Amateur Radio Society, Inc., is pleased to announce the all new Asheville Autumnfest, which takes on an entirely new look this year. It will be held on Saturday, October 7, 1978, at the Asheville Civic Center, with all activities, dealers, displays, and flea market areas, indoors. There will be some form of social activity in the Civic Center Saturday evening, after the normal hamfest activities. For further information, contact Carl E. Smith N4AA, PO Box 1488, Asheville NC 28802.

GAITHERSBURG MD
OCT 8

The Foundation For Amateur Radio will hold its annual hamfest at the Gaithersburg Fairgrounds, Gaithersburg, Maryland, on Sunday, October 8, 1978. Featured are a large flea market, food service, exhibits, ladies' events, supervised children's program, and many prizes. Main events are all indoors and will be held rain or shine. Picnic grounds and free parking available. Participation fee is $2.00. Sales space for flea market is $5.00 per space on a first-come basis; commercial exhibitors $15.00 each space with pre-registration required prior to October 4th. Talk-in will be provided, and nearby motel rooms available. For information, write or call Ron Levin W3GBU, 802 Greenview Court, Reisterstown MD 21136; (301)-833-1816.

CEDAR RAPIDS IA
OCT 8

The Cedar Valley Amateur Radio Club annual hamfest will be held on Sunday, October 8, 1978. Top prize is a new Drake TR-7/DR-7 transceiver and power supply. Other prizes include a Heathkit HW-8, a Clegg FM-76, and much more. There will be technical talks and movies all day. Manufacturers and dealers are welcome, with Saturday afternoon setup available. Talk-in on 146.16/.76, 146.52, 223.5, and 3.970 MHz. Advance tickets are $1.50; $2.00 at the door. For complete information, write CVARC Hamfest, Box 994, Cedar Rapids IA 52406.

LEAGUE CITY TX
OCT 8

The Tidelands Amateur Radio Society will hold its Hamfest '78 on Sunday, October 8, 1978, at Galveston County Park in League City, Texas (approximately 25 miles south of downtown Houston) from 9:00 am to 4:00 pm. Those individuals who are participating with exhibits, booths, etc., may construct them on Saturday, October 7, from noon until the following day. Individuals will be present overnight to protect equipment and exhibits. Drawings will be held for various prizes throughout the day of the hamfest. For more information, contact Michael Sandberg WD5CHJ, 2317 Pecan, Dickinson TX 77539 or phone (713)-534-6656.

YONKERS NY
OCT 8

The Yonkers Amateur Radio Club will hold its second annual hamfest on Sunday, October 8, 1978, 9:00 am to 6:00 pm, at Cook Field in Yonkers, New York. Admission is $3.00 for sellers and $1.00 for buyers. There will be picnic and sanitary facilities available as well as recreation for the kids. Bring your own table. There will be an extensive menu. There will be a general auction at 2:00 pm and many dealer displays and planned events. Talk-in on 146.265/.865 and .52. For advanced registration or further information, contact Otto Supliski WB2SLQ, 53 Hayward St., Yonkers NY 10701; (914)-969-1053.

DALLAS TX
OCT 12-14

The Medical Amateur Radio Council (MARCO) will hold its 12th International Meeting on October 12-14, 1978, at the Fairmont Hotel, in Dallas, Texas. MARCO is a worldwide organization of medical and other interested people with a common interest in communications and electronics, namely, amateur radio. The purposes of MARCO include the exchange of scientific and technical information among its members and providing communications to remote areas in times of natural disaster or other emergency situations where medical consultation is needed. The meeting in Dallas will focus on the practical role computers can play in day-to-day medical practice and postgraduate education. Also, the use of space satellites in the exchange of biomedical information will be introduced. Practical live demonstrations will be given using OSCAR and the Communications Technology satellite. The meeting will be held in conjunction with the University of Texas Health Science Center, the A. Webb Roberts Center for Continuing Medical Education, and Baylor Medical Center. Continuing medical education credits will be available to doctors needing them. MARCO membership is not required for attendance at the meeting. Registration information may be obtained from Mervin Grossman, M.D., PO Box 18114, Dallas TX 75218.

LONDON ONT
OCT 13-15

The London Amateur Radio Club will hold the most exciting R.S.O. convention ever on October 13, 14, 15. Every aspect of amateur radio activities will be represented, from antique radio displays right through to moon shots and TV. But, best of all, just wait until we can let you in on the lineup of prizes for attending! Drawings will be frequent and worthwhile. The R.S.O. convention will be held at the Holiday Inn (downtown) in London on October 13, 14, and 15, 1978.

KANSAS CITY MO
OCT 13-15

The MO-KAN Council of Amateur Radio Clubs is pleased to present the ARRL Midwest Division Convention to be held Friday through Sunday, October 13-15, 1978, at the Kansas City Hilton Airport Plaza Inn, 8801 N.W. 112. Happenings include ham sessions, dignitaries, exhibits, a ladies' program, dinner theater, and a fashion show. There will be a Saturday night banquet ($12.00/person). Make reservations directly with the hotel. Mention ARRL discounted rates. Lend your support with a $3.00 preregistration. Mail checks to the MO-KAN Council of Amateur Radio Clubs, PO Box 704, Kansas City MO 64141.

WASECA MN
OCT 14

The Viking Amateur Radio Society will hold its 8th annual swapfest on Saturday, October 14, 1978, at Waseca High School, from 9:00 am to 4:00 pm. For further information, contact VARS, Box 3, Waseca MN 56093.

EAST RUTHERFORD NJ
OCT 14

The Knight Raiders VHF Club will hold its auction and flea market on Saturday, October 14, 1978, beginning at 10:00 am, at St. Joseph's Church, East Rutherford, New Jersey. Free parking and admission. Refreshments will be available. Tables are $5.00/full table and $3.00/half table in advance; $6.00/full table and $3.50/half table at the door. Talk-in on 144.65/145.25 and 146.52. For further information, contact Bob Kovaleski (201)-473-7113 or Bob Czyzewski (201)-791-5651. For reservations, make checks payable to Knight Raiders VHF

 Oct - 1978

Club, Inc., PO Box 1054, Passaic NJ 07055.

MEMPHIS TN
OCT 14-15

The annual Memphis Hamfest will be held on October 14-15, 1978, at the Mid-South Fairgrounds, in the Youth Center Building, in Memphis, Tennessee. Activities include a flea market and exhibition area (both inside and air-conditioned), the traditional hospitality party, and a tour of Elvis's Graceland Mansion for the ladies. There will be many prizes, including a Drake TR-7. There is plenty of free parking and trailer hookups are also available. Registration is $3.00 per person over 14. Tables are $3.00 per day. Talk-in on .34/.94 and .04/.64. For tickets and flea market reservations, write Greater Memphis Hamfest, PO Box 3845, Memphis TN 38103.

FAIRFIELD NJ
OCT 14

The Livingston Amateur Radio Club will hold its annual flea market on Saturday, October 14, 1978, 10:00 am to 4:00 pm, at the Fairfield United Methodist Church, Fairfield, New Jersey. The church is located at the corner of Plymouth and Horseneck Rd., close to Route 80 and one long block in from Route 46. Admission is free. Sellers' fee is $4.00 per car space. Refreshments will be available. For information, contact LARC, 116 Orton Rd., W. Caldwell NJ 07006; (201)-226-7943.

BOXBOROUGH MA
OCT 14-15

The New England ARRL Convention has moved from Boston to Boxborough, Massachusetts, on Route 495, Exit 28. There will be a large flea market inside and outside, free parking, 50 booths by the leading exhibitors of amateur gear and accessories, and seminars on both days. Special YL programs include a fashion show, brunch, and a bus tour of Lexington and Concord. Saturday night there will be a prime-rib banquet, nightclub show, and dancing. The prize program has been altered so that awards will be made both days. FCC exams will be given Saturday only and only by appointments, with correctly filled out 610 forms received by September 20 by the exam chairman: K1LJN, 40 Isabella St., Stoneham MA 02180. No exceptions—FCC rules. There will be a bus tour to the ARRL headquarters in Newington Saturday morning leaving the convention at 10:00 am (price to be announced). Early-bird registration $4.00; $5.00 at the door. Kids under 16 are free. Banquet/show/dance tickets for Saturday night are $16.00 per person. Tickets available from W1ZQQ, 17 Barnes Avenue, East Boston MA 02128. The show's sponsor is the Federation of Eastern Massachusetts Amateur Radio Associations. Hotel Reservations should be made directly with the Sheraton Boxborough Hotel: $34 single; $40 double; kids under 18 free with parents. Campers permitted only at the Minuteman KOA Campgrounds approximately 3 miles away in Littleton MA. Hook-ups available. Write Box 122, Littleton MA 01460.

ISLIP NY
OCT 15

The Long Island Mobile Amateur Radio Club, Inc., will hold its annual hamfest on the hardtop area of the Islip Speedway, one block south of Exit 43 of the Southern State Parkway, Islip, New York, beginning at 9:30 am. Main door prize is a frequency counter. Bring your two-meter gear for frequency, audio, and deviation checks. Sellers' and exhibitors' spaces are $3.00 per space. General admission is $1.50. Ladies and children under 12 admitted free. Food and refreshments will be available. For complete information, write Hank Wener WB2ALW, 53 Sherrard St., East Hills NY 11577 or phone (516)-484-4322 or (516)-379-6463 at night.

WAKEFIELD MA
OCT 21

The annual auction of the Quannapowitt Radio Association will be held on Saturday, October 21, 1978, at St. Joseph's Parish Hall, near the railroad station in Wakefield, Massachusetts. The doors open at 10:00 am and the auction starts at 10:30. Admission is free.

WESTBORO MA
OCT 22

The Massachusetts 2-Way Radio Association is pleased to announce the "Challenger Road Rally," to begin October 22nd at 11:01 am, from the Westmeadow Plaza in Westboro, Massachusetts. After approximately two hours of routing through area towns, the rally will end at the Northboro Fish & Game Club in Northboro MA. The cost will be $2.00 per person (children under 12 free) with a maximum of $5 per car. At least two persons must be in each car, and all drivers must have a valid driver's license. This is a car rally—no big trucks, motorcycles, or racers. If you wish to participate in something other than a car, you should call and make sure it is acceptable. Trophies will be awarded for first place team and first place individual; also for "Last, but finished" individual. All preregistered teams will receive a participation award. No dealers. Refreshments will be available. Trophies are to be awarded at approximately 3:00 pm. For information, contact Mass 2-Way Radio Association, Challenger Road Rally, Box 203, Northboro MA 01532, or call (617)-845-2079.

TAYLOR MI
OCT 22

The Repeater Association of Downriver Amateur Radio (RADAR) is holding its second annual Swap & Shop on Sunday, October 22, 1978, 9:00 am to 3:00 pm, at Kennedy High School, Taylor, Michigan. The school is located on Northline Rd., east of Telegraph Rd. (U.S. 24). There will be door prizes, plenty of parking, and food available. Admission is $2.00. Talk-in on 147.93/.33, .52, and .94. For information, contact RADAR, Inc., PO Box 1023, Southgate MI 48195.

BILOXI MS
OCT 22

The Gulf Coast Ham/Swap Fest will be held on Sunday, October 22, 1978, at the International Plaza, which is loated at the west end of the Biloxi/Ocean Springs bridge on Highway 90 in Biloxi, Mississippi. Tickets are $1.00. Tables are $2.00. Talk-in on 146.13/.73 and 146.52. Free parking, including RV's, from 9:00 am on Saturday, October 21. For information, advance tickets, and table reservations, contact Irvin L. Kelly K5YIN, 116 Wiltshire Blvd., Biloxi MS 29531.

FORT LAUDERDALE FL
OCT 28-29

The Broward Amateur Radio Club will hold their Pan-American Ham Exposition Jamboree on Saturday and Sunday, October 28 and 29, 1978, at the National Guard Armory on State Road 84, two blocks west of Andrews Ave., Fort Lauderdale, Florida. Activities include awards, prizes, and manufacturers' displays. Admission is $2.50 advance; $3.00 at the door. For complete information and a floor plan, contact Ian Seidler W4MRR, 10221 N.W. 36th St., Coral Springs FL 33065.

PLYMOUTH IN
OCT 29

The Marshall County Amateur Radio Club will conduct its 3rd annual Swap and Shop Hamfest on Sunday, October 29, 1978, at the Armory at 11th and West Madison Street, in Plymouth, Indiana. Food services will be available and there will be many door prizes. No charge for tables and they can be reserved. Tickets are $2.00. Doors open to public from 7:00 am to 4:00 pm. For further information, contact Melvin Mahler, PO Box 151, Plymouth IN 46563.

SOUTH GREENSBURG PA
NOV 4

The Foothills Radio Club of Greensburg will hold its annual swap-n-shop on Saturday, November 4, 1978, from noon to 5:00 pm, at St. Bruno's Church at the junction of U.S. Rte. 119 and Rte. 819 in South Greensburg, Pennsylvania, just off turnpike exit 8. There will be an indoor flea market. Talk-in on .07/.67 and .52. For further information, contact Melvin Ruble WA3RVD, Mark Drive, Delmont PA 15626.

HOUSTON TX
NOV 4-5

The Houston chapter of Ten-X, S.H.O.T., will hold its second annual Houston Hambash on Saturday and Sunday, November 4 and 5, 1978, at Spring Creek Park. There will be a barbecue, soft drinks, beer, prize drawings, and planned activities for all, including the kids. Full camping facilities, including hookups, are available. All amateurs are invited. For more information, contact Bob Libbers WB5FII, 4034 Jackwood, Houston TX 77096.

SAND KEY FL
NOV 25-26

The Florida Gulf Coast Amateur Radio Council's second annual convention will be held on November 25 and 26, 1978, at the Sheraton Sand Key Hotel.

LAUREL MD
NOV 26

The Columbia Amateur Radio Association will hold its 2nd annual hamfest on Sunday, November 26, 1978, beginning at 8:00 am, at the Laurel Race Way, three miles north of Laurel on Route 1. Admission is $2.00 and tables are $5.00. There will be food services, prizes, and a giant flea market. Everything is indoors. Talk-in on 147.735/.135, 146.16/.76, 146.52/.52, and CB channel 1. For information and reservations, contact Sue Crawford N3SC, 6880 Mink Hollow Road, Highland MD 20777.

OAK PARK MI
NOV 26

The Oak Park High School Electronics Club presents the ninth annual Swap 'N Shop on Sunday, November 26, 1978, at Oak Park High School, 13701 Oak Park Blvd., Oak Park, Michigan 48237. There will be refreshments and door prizes. Donation is $1.50. Tables are $1.00 and $2.00.

Peter A. Stark K2OAW
PO Box 209
Mt. Kisco NY 10549

Low-Pass Filter Primer

—tells all

Although my interest in active low-pass filters is due mainly to my interest in RTTY, they can be found in other places as well—transmitters, speech amplifiers, synthesizers, etc. (If you are interested in active bandpass filters, see my article in the September, 1977, issue of *73 Magazine*. That article also provides some background information that is of use in connection with low-pass filters.)

An active filter is a filter which uses an amplifier, usually an operational amplifier integrated circuit such as a 741, in an RC circuit which achieves the same performance as would otherwise require an LC circuit. As opposed to the LC filter, an active filter is usually cheaper to build since it does not require expensive and bulky inductors, and is often easier to design and trim as well. In case your knowledge of filters needs a little brushing up, the following discussion will bring you up to date and introduce some of the basic concepts of filters.

Single-Stage Filters

A passive low-pass filter—that is, one not using an amplifier—can be built with either just RC components or with an LC circuit. Fig. 1 shows the diagrams of several such simple low-pass filters, while Fig. 2 shows their frequency response. The simplest is the single-stage RC filter, Fig. 1(a). Because it has just one reactive component, a capacitor, it is called a one-pole filter. Its frequency response curve is the top curve in Fig. 2.

Looking at the top curve in Fig. 2, we see that the far left of it approximates a straight line, and the far right of it also is like a straight line. If we take a ruler and draw two dashed lines as shown, continuing the straight portions of the curve toward the middle, they meet at what is called the *cutoff frequency* or *corner frequency*—this is the frequency where the two straight lines meet at a corner. To keep things simple, this frequency response drawing assumes a corner frequency of 1 Hz, but the curve would have the same shape regardless of what the frequency is. For instance, a 50 Hz filter would look the same, but all frequency readings shown along the bottom would be multiplied by 50.

The plain RC filter's response is down 3 dB at the corner frequency; at half this frequency it is down 1 dB, while at twice that it is down 7 dB. Once it becomes straight, beyond 4 Hz or so, it continues to drop 6 dB for every doubling of frequency (this is called *6 dB per octave*), which is the same as 20 dB for every *decade* (a decade is a 10 to 1 ratio of frequency).

When two stages of RC filtering are put together, as in Fig. 1(b), they interact to some extent and produce strange results. But if it is done right, or if the two stages are separated by an amplifier so the second does not load down the output of the first, then the result is the bottom curve of Fig. 2. Here the corner frequency is the same, but the response at this frequency is down 6 dB, 3 dB for each stage. It is down 2 dB at half the frequency, 14 dB at twice the frequency, and it drops at the rate of 12 dB per octave or 40 dB per decade, exactly twice the rate for the single-filter stage. This filter has two reactive components, both capacitors, and so it is called a two-pole filter.

Another two-pole filter is the LC filter of Fig. 1(c) which has two reactances, one inductor and one capacitor. If designed just right, it, too, has a response curve like the bottom one in Fig. 2. But depending on the Q of the filter—the amount of resistance in the circuit introduced by the LC components—the LC filter can have other response curves as well, as shown in Fig. 3. A lossy cir-

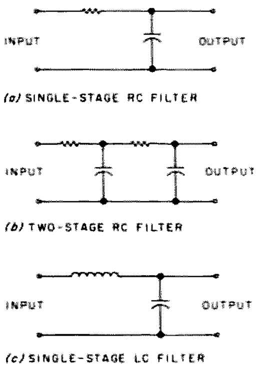

Fig. 1. Some simple passive filters.

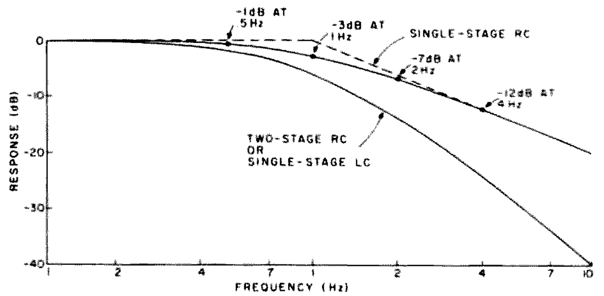

Fig. 2. Passive filter frequency response.

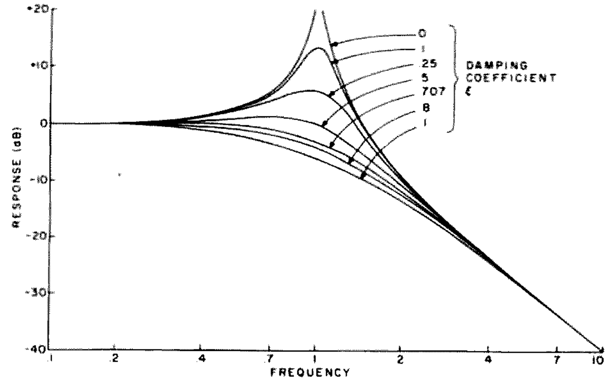

Fig. 3. Possible two-pole low-pass filter responses.

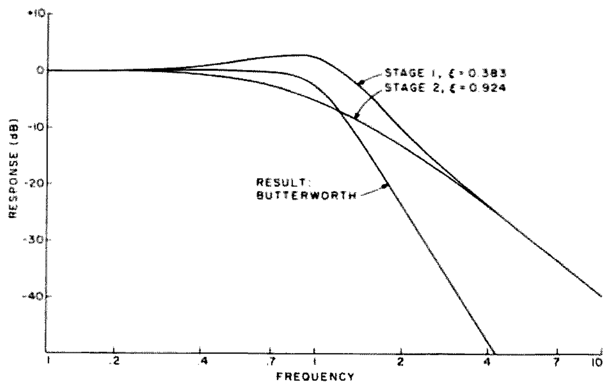

Fig. 4. Making a four-pole Butterworth filter.

cuit with high resistance in it will have the lowest curve shown, the same as that for the two-stage RC filter. On the other hand, if the resistance in the circuit is small, then the low-pass filter will actually act like a series resonant circuit which will peak at the corner frequency to give a large peak, as shown by the top curve. Any of the curves shown could be achieved.

To describe the precise shape of the filter curve, engineers define something called the *damping coefficient*, signified by the Greek letter zeta (ζ). The top curve, which is completely undamped and has a large peak, has $\zeta = 0$. The bottom curve, which is completely damped so that it resembles the curve for RC stages, has $\zeta = 1$. (Although Q is not always used with low-pass filters, if you know the coil Q at the corner frequency, then $\zeta = 1/2Q$ gives the damping coefficient.)

Although the bottom curve is a typical two-stage RC filter, you can see that LC filtering can give a better response. The curve for $\zeta = .707$, for example, is flatter across the top, below the cutoff frequency, and drops off faster above it. If a slight rise in the response is allowed, then $\zeta = .5$ may be even better. Ultimately, though, each of the filters, regardless of its ζ, drops down to the same -40 dB at 10 Hz, and then continues dropping at the same 12 dB per octave. The difference between all of them occurs only near the corner frequency. The filter whose top is the straightest without having an overshoot is called the *Butterworth;* another name for it is *maximally flat*. It is the flattest without going above 0 dB. Its $\zeta = 0.707$.

Butterworth filters are nice because, in addition to their even frequency response, they are easy to design and also have a fairly smooth effect on the phase of signals passing through them. It is also possible to design Butterworth high-pass and bandpass filters; see the article in the September, 1977, issue of *73 Magazine* for instructions on how to design bandpass Butterworth filters.

Though the two-pole Butterworth filter response of Fig. 3 (for $\zeta = .707$) has a smooth frequency response, it still has a fairly gradual cutoff near the cutoff frequency, and it still drops only at the rate of 12 dB per octave. But it is possible to build better Butterworth filters by combining two or more LC stages.

Fig. 4 shows how this is done. If we take one stage which is fairly highly damped with $\zeta = 0.924$ and combine it with a second stage which has a peak ($\zeta = 0.383$), then we get a result which is very flat across the top, drops by 3 dB at the corner frequency, and continues to drop at the rate of 24 dB per octave at high frequencies. This is the Butterworth filter shown in Fig. 4. By combining more stages, we can get Butterworth filters having more poles: two stages give four poles, three stages give six poles, and so on. The trick comes in knowing just what ζ to use for each stage. This can be done graphically or by using a table. The term *pole* is an engineering term having to do with complex numbers and values of a certain term which causes a circuit equation to "blow up," that is, become infinite. The precise meaning is unimportant, though, because these poles can be graphed as in Fig. 5. For a two-pole filter, for instance, there are two poles, shown as Xs graphed on a semicircle. Whatever the number of poles, they have to be evenly spaced around the semicircle, and the angle between poles has to be equal to 180° divided by the number of poles. In the case of two poles, this makes them 90° apart, so that the angle of the pole on the right-hand side is 45° above the bottom line. The ζ is simply the sine of this angle, and can be found with any calculator which has a sine key.

Going down in Fig. 5, we

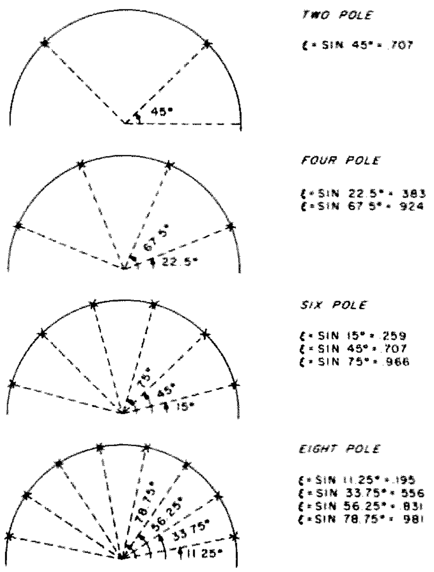

Fig. 5. Pole locations for even numbers of poles.

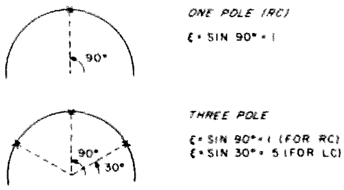

Fig. 6. Pole locations for odd numbers of poles.

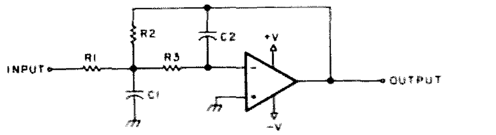

Fig. 7. Diagram of one active low-pass filter stage.

see that for the four-pole filter, the poles are 22½ and 67½ degrees above the horizontal, so the two values of ζ needed are sin 22½° = 0.383, and sin 67½° = 0.924. Keeping in mind how the poles have to be located on the circle, you could draw your own pole locations for as many poles as you want. For every two poles you would then need one LC circuit.

Although Fig. 5 shows only even numbers of poles, it is possible to build Butterworth filters having odd numbers of poles. For instance, a single RC stage has a single pole, at the very top of the semicircle as shown in Fig. 6, at the top. In this case, the angle above the horizontal is 90°. A three-pole filter, shown at the bottom of Fig. 6, would have three poles still evenly spaced, 60° apart. The top pole would be produced by an RC filter stage, while the other two poles would be produced by an LC filter having ζ = 0.5.

Although these pictures of poles are interesting and provide an easy way of remembering where they go and how to calculate the required value of ζ for any desired filter, it is easier to consult a table like Table 1 for the exact values needed.

So far we have been discussing only RC and LC filters. But, as mentioned before, LC filters are hard to adjust, expensive, and often large. Fortunately, an active filter, using just RC components plus an operational amplifier integrated circuit, can produce the same response as an LC filter.

Active Filters

Though there are several filter circuits which can be used, that of Fig. 7 is probably the simplest, using just one operational amplifier IC, three resistors, and two capacitors.

The design procedure is to start off by picking a convenient value for capacitor C2; most audio designs use values of perhaps 0.01 or 0.1 uF. Next, choose how much gain (G) you want the filter to have at dc and low frequencies. Best operation will *occur* when G is less than 10, although it can be made as high as 100 when the filter is designed for low frequencies and ζ is large.

Once C2 and G are chosen, find the other component values from the following equations:

$$C1 = \frac{C2\,(1 + G)}{\zeta^2}$$

$$R2 = \frac{\zeta}{2\,\pi\,f\,C2}$$

$$R1 = \frac{R2}{G}$$

$$R3 = \frac{R2}{1 + G}$$

Although it would certainly be nice to use the exact calculated values in building your circuit, such accuracy is not usually needed; commercial values are usually good enough since the exact operating frequency or damping of low-pass filters is not usually critical.

Nevertheless, if you find you want to play with the circuit values a bit after they are calculated, here are some hints. Changing R1, within a fairly large amount, affects only the gain, since G = R2/R1. So making R1 smaller will increase the gain, while making it larger will decrease the gain. But keep the gain below 10 if ζ is small.

Sometimes, it may be handy to change the value of C1 if it comes out to be different from what is available. C1 and R3 are related and can be changed as long as their product stays the same. For instance, if C1 is calculated at 0.02 uF and R3 is 590 Ohms, you could cut C1 by two to 0.01 uF and double R3 to 1180 or 1200 Ohms; the circuit performance would stay the same, since dividing one by 2 and multiplying the other by 2 keeps their product the same.

When building active filters, you must use good components. Do not use disk capacitors, even for testing; polystyrene or polycarbonate capacitors are best, though plain tubulars or mylar capacitors will work well, too. Also use good op amps, such as the 741, 1458, 5558, or 747; I have had bad luck with the LM3900 in some filters. If you need two or more op amps for the same filter, use separate ICs; I have found some undesirable interactions between two amplifiers in the same IC when used in high-gain filters.

A Practical Example

For use as a low-pass filter for RTTY, I needed a low-pass filter with a cutoff frequency of 50 Hz. I decided I wanted a four-pole filter which would cut off rather quickly, so I went for two active filter stages, as follows:

No. of poles	Required values of ζ					
1	1.0 (RC)					
2	0.707					
3	0.5	1.0 (RC)				
4	0.383	0.924				
5	0.309	0.809	1.0 (RC)			
6	0.259	0.707	0.966			
7	0.223	0.623	0.901	1.0 (RC)		
8	0.195	0.556	0.831	0.981		
9	0.174	0.5	0.766	0.940	1.0 (RC)	
10	0.156	0.454	0.707	0.891	0.988	
11	0.142	0.415	0.655	0.841	0.959	1.0 (RC)
12	0.131	0.383	0.609	0.793	0.924	0.991

Table 1. Values of ζ for Butterworth low-pass filters.

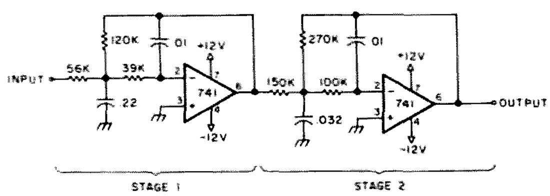

Fig. 8. Complete four-pole low-pass filter.

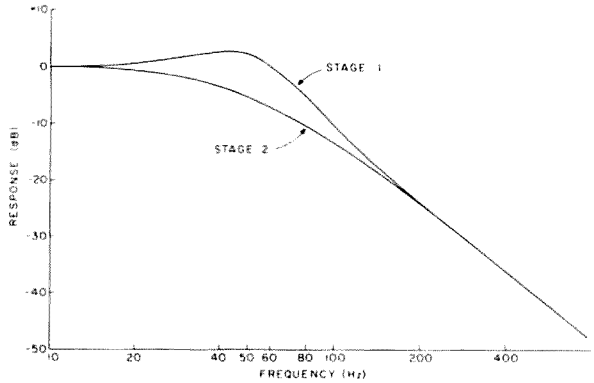

Fig. 9. Response of two filter stages.

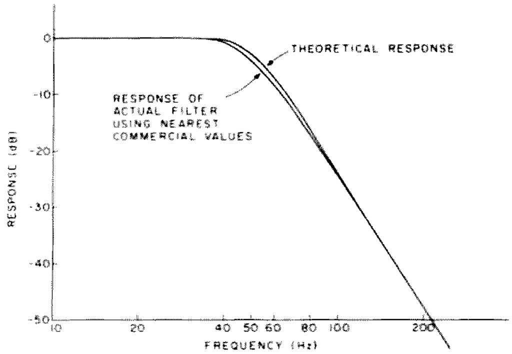

Fig. 10. Actual low-pass filter response.

Stage 1: f = 50 Hz; desired gain G = 2; from Table 1 we need ζ = .383; I chose C2 = 0.01 uF. From the equations, I got the following:
R1 = 60,956 Ohms
R2 = 121,912 Ohms
R3 = 40,637 Ohms
C1 = 0.2045 uF

Since I did not have exactly these values, I let R1 = 56k, R2 = 120k, R3 = 39k, and C1 = 0.22 uF.

Stage 2: f = 50 Hz; desired gain G = 2; from Table 1 we need ζ = 0.924; I chose C2 again at 0.01 uF. From the equations, I got the following:
R1 = 147,059 Ohms
R2 = 294,118 Ohms
R3 = 98,039 Ohms
C1 = 0.0351 uF

The values actually used were 150k for R1, 270k for R2, 100k for R3, and 0.032 uF for C1 (0.022 in parallel with 0.01). The complete circuit is shown in Fig. 8.

The frequency response calculated for each of the two stages is shown in Fig. 9. Fig. 10 gives the theoretical response for the four-pole Butterworth filter, along with the frequency response actually measured on the circuit using the commercial equivalent values given in Fig. 8. Although the test equipment was not particularly fancy—the output above about 150 Hz was too low to be measured by my meter—this shows that the equations seem to work. Only the gain was slightly off; theoretical gain should have been 4 (2 in each stage), while the total gain measured only a bit more than 3. Nevertheless, the total gain could have been easily adjusted by changing the value of R1 in either stage. In general, the performance of these low-pass filters is close to what you would expect from the equations. ■

C. S. Hayek WN3NNY
10106 Colonial Drive
Ellicott City MD 21043

Hello Hamdom!

—a CBer makes the switch

At the county fair, amateur radio occupied the esteemed position to the left of the wheel of fortune and across the path from the 4-Hers' prize pigs. I would never have found it had my little brother not been possessed by an unappeasable longing to feel animal hides. Having left him in the fresh air of the swine exhibit, I was standing outside an antenna-topped trailer when a gray-haired man waved to me, indicating I should come closer. My interest in electronics had already sprouted (manifesting itself in CB and a room full of construction projects in constant peril from my mother's roving wastebasket), so I needed little urging to investigate a trailer with an antenna. The gray-haired man ushered me in. Tables lined the whole trailer length, supporting a dozen radios of unfamiliar origin – certainly not Johnson or Lafayette CB transceivers. My host introduced himself as "Bill" and introduced the trailer as the local ham radio club's mobile exhibit.

Ham radio had seemed as unapproachable to me as communicating with the Apollo mission from Houston Space Center until that night at the fair. Here sat six men tuning receivers and transmitting to Arizona, Germany, Texas, and Hawaii. Since this was my first exposure to amateur radio, the dramatic demonstration left me in complete awe and quite dissatisfied with the limited range of CB.

I asked Bill what I must do for a ham radio license.

"Dave," he yelled, "can you come here a minute?" Dave, a short, plump gentleman of about fifty years, strolled over. "This young man wants to get his ticket. Are you still giving code lessons?"

"Indeed I am. You want to learn the code?"

My mind answered "yes" eight times before I got one into the air.

"Good. Here's my phone number. Give me a call when you're ready to start."

Saying "thanks," I hurried out of the trailer inebriated with dreams of becoming a ham and armed with enough vitality to survive the home-canned vegetable contest.

Right after the fair, our family departed for a vacation in Ocean City MD, so it wasn't until two weeks later that I called Dave. As friendly as ever, he invited me over the next night. Code practice began immediately.

Dave provided me with no short-cut methods for learning Morse code – no verbal quizzes, no flash cards, no sound associations. He wrote the alphabet with the dits and dahs to the right, and I memorized them for my session the next Tuesday. From then on, all practicing dealt strictly with the straight-keyed oscillator. He satisfied himself that I knew all letters by sound, then proceeded to transmit words. At a pace of about two hours per weekly meeting, we gained ground until speed became the sole object of our drilling. Finally, Dave sent for the FCC Novice exam.

Studying for the Novice written exam can be done in two ways: the fundamental understanding method or the "get me past the written test" method. I started with lofty ideals – several books on electronic theory and a pamphlet of radio regulations rested in a convenient spot on the desk. However, a week of subjects no less fascinating than front end image response, coupled tuned rf circuits, and screen modulation sent me searching for a better attack. Bring on the *ARRL License Manual*, faithful advisor and dog-eared servant. Memorizing questions and answers representative of those on the exam proved to be a very efficient way of preparing for the ordeal.

Dave's basement shack seemed ominous on test day. First, Dave instructed me to send words from his master list at approximately five words per minute to loosen up. I was particularly careful with the letter spacing, since my mentor always stressed its importance. Next, Dave warned me to "get used to his keying" in order to be well prepared for the listening test. After twenty-five five-letter words worth of "getting used to his keying," wily Dave announced that I had passed the code.

The FCC, in addition to regulating communications, stretches the patience of anxious, license-awaiting citizens to unbearable limits. I spent my fall looking over (and over . . .) a copy of *CQ* I happened to find in a magazine rack. I hunted ceaselessly for beams atop houses for the

satisfaction of knowing that that person belonged to the select group I might shortly join. I daydreamed to excess in school, preferring visions of how my station would be arranged to endless analyses of *The Red Badge of Courage*.

A few days before my October birthday the license arrived — my own callsign, WN3NNY. Leave it to Dad to put things in a different perspective.

"Well, NINNY," he observed.

The next day, Dad and I drove to the local amateur supply shop where I bought my equipment, an Eico 720 transmitter and Hallicrafters SX-110 receiver. Stringing the antenna remained as the last necessity.

"Bob, the Hayek boy's in the backyard throwing a hammer at the tree."

"Trying to get rid of the squirrels that ate their peaches this summer?"

"No, it's the oak tree — the one he lost the wrench in yesterday. I think he's trying to hang something."

"He loses any more tools in the tree and his parents are going to hang something."

With my dipole finally hung high in the backyard and my radio station assembled on my desk, I attended to the last-minute equipment connections — power plugs in, receive antenna (a long wire) attached, dipole attached to the transmitter, speaker plugged into the receiver, and key plugged into the transmitter. Unfortunately, the key wandered unrestrained on my desktop, but I was too anxious to wait to build a heavy base. The station lit up. The receiver was receiving! The transmitter was loading! Hundreds of signals squawked at me. I answered my first CQ with a shaky call (my fist was steady; it was that damned loose key) and anticipation as great as if I were about to talk to Apollo. ■

More "Coming Of Age"

L. Foord VE3FLE
763 Gladstone Dr.
Woodstock, Ontario
Canada N4S 5T1

The rig was lying on its side, obstinately refusing to reveal the cause of my intermittent audio, when Teresa came into the room. "Hi, Daddy," she said cheerfully. "What are you doing?"

The XYL had warned me she was at the inquisitive age, that fathers should avail themselves with infinite patience and understanding. "They're in their formative years," were her words. But patience was a melting virtue; I'd just spent three hours searching for some erratic component or elusive cold solder joint. "Trying to get the radio to work," I replied, as cheerfully as I could under the circumstances.

"Boy, there sure are a lot of wires and things in there! Is that bionic?"

I had to smile. "No. I think maybe you're watching too much television."

"No, I don't think so," was her very serious reply. "What's that?" she asked, pointing to the key.

"That's Daddy's key."

"Sure is a funny looking key. What does it unlock?"

"It's not that kind of key. I use it to send Morse code. You know, dots and dashes. That's called CW. When I get tired of talking, I use CW instead of phone."

"You should tell Mommy to do that."

"Why?"

"Well, you always say she uses the phone too much. Maybe she could use your key."

"Good idea," I conceded.

"Want me to tell her?"

"No, it's O.K. I'll tell her later."

There were a few moments of thoughtful silence as I probed and prodded in vain. "Daddy," she went on. "I don't want to move. We haven't lived here very long and I like it here."

"We're not moving," I protested. "What made you think something like that?"

"I heard you call your room a shack, and I thought since you didn't like it, you might want to move again."

I laughed. "That's just an expression. All radio operators call their rooms 'shacks.' It doesn't mean they aren't nice rooms."

"Oh," she replied. "And I heard you tell someone on the radio that since we moved here you were disappointed because there wasn't much traffic. I thought you would like it because it's so easy for me to cross the street by myself."

"Honey, that's a different kind of traffic. It means messages on the radio."

She gave me a quizzical glance. "Then we're not moving?"

"Not a chance."

"Good. If we're not moving, when are we going to get the fireplace?"

"Where did you get that idea?"

"I heard you say you had so many logs you should burn some of them. So I figured we're getting a fireplace."

"They're a different kind of log," I said, feeling desperation creeping into my voice.

"Another . . . expression?"

"Yes, I'm afraid so."

"Is that like a riddle?"

"Sort of."

"Guess I'll go play," she announced.

"Have fun."

She paused at the doorway. "Want to hear a riddle?"

"Sure."

"What kind of radio would you eat for dinner?"

"I give up."

"Ham radio," she said, and burst into laughter.

I laughed politely and went back to the rig. That was when I discovered the loose microphone cord. ■

Rejuvenate A Pawnee!

—put it on 2

Sherman P. Wantz K4GRT
424 NW Lakeview Drive
Sebring FL 33870

Garold F. Shepherd W4IEV
1803 Prospect Street
Sebring FL 33870

There must be thousands of HW-20 "Pawnee" two meter AM transceivers gathering dust in active ham shacks throughout the country. I can't conceive of a ham so affluent—or so unappreciative of mechanical beauty—that he could discard his Pawnee irrespective of his need for more space. The Pawnee's cool green cover adorned by dual tuning dials and eight chrome-plated (chrome!) knobs continues to cry out for recognition, even after twenty years of retirement.

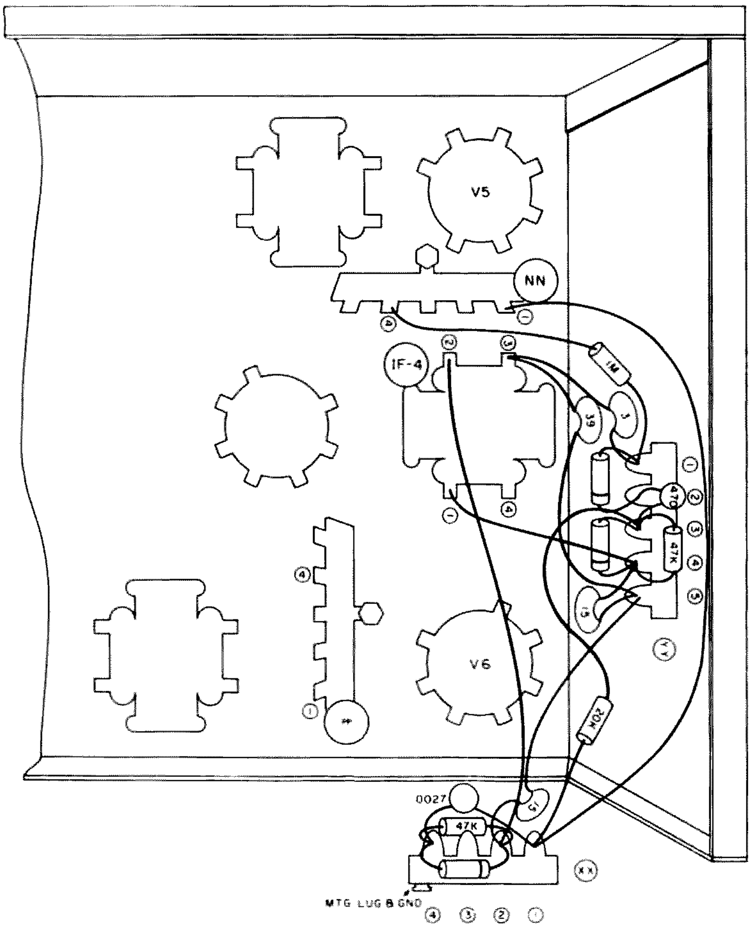

Fig. 1.

It's little wonder that my Pawnee caught the eye of "Shep" Shepherd W4IEV when he visited my shack to discuss an equipment trade. He owned a twenty meter beam that I needed desperately. I offered my Pawnee in exchange when Shep said he'd like to put it to use on the two meter FM band.

The look in Shep's eyes reassured me that my Pawnee would be gaining an appreciative owner. So I parted with it.

I'm glad I did. Shep resurrected the old warrior, gave it a discriminator and a phase modulator, and is now using it quite successfully to hunt repeater stations throughout central Florida.

This article describes Shep's modification. Those of you who were fortunate enough to have held on to your HW-20s can make the simple changes Shep recommends and experience the pleasure that comes with operating a continuously tunable receiver and a ten-Watt "rock-stable" vfo-con-

trolled transmitter to sample the interesting QSOs that are taking place daily on numerous repeater stations in your area.

Heath's twenty-year-old two meter AM Pawnee transceiver is just too beautiful to become a museum piece. It's easy to recycle it for operation in the two meter FM band.

Modifying the Receiver

Test the receiver to be certain that it is still operating properly. Tune it to a station on the air or tune it to a signal produced by a signal generator. If necessary, troubleshoot and repair the receiver before you attempt to modify it and save yourself at least one headache.

In order to make space for the two new terminal strips required in the receiver section, remove the external speaker phono jack on the rear apron adjacent to tube V6. The wire leading to this jack may be clipped near the cable breakout point or be taped and tucked out of the way.

Remove the modulation monitor slide switch and solder the black wire leading to pin #1 of the switch to the headphone jack pin #3. Remove the spaghetti-covered lead that connects pin #2 of the switch to headphone jack pin #3. The gray lead that used to connect to switch terminal #3 may be either clipped or tucked out of the way.

Remove the 0.56 pF capacitor connected between pin #1 of IF-4 transformer and pin #7 of V8. Discard this capacitor.

Refer to Fig. 1 for a review of component symbols used by Heath Company and repeated here to

Parts List

Receiver

1 capacitor, 3 pF, 600 V dc, silver mica
1 capacitor, 39 pF, 600 V dc, silver mica
2 capacitors, 15 pF, 600 V dc, silver mica
1 capacitor, 470 pF, disc, 50 V dc
1 capacitor, .0027 uF, disc, 50 V dc
3 diodes, 1N34 or equivalent
2 resistors, 47k, ¼ W
1 resistor, 20k, ¼ W
2 terminal strips (see note below)

Transmitter

1 tube, 6J6 or 6C4
1 tube socket, 7-pin miniature, and shield
2 capacitors, 100 pF, 600 V dc, silver mica
2 capacitors, .02 uF, 500 V dc, disc
2 resistors, 100k, ¼ W
1 resistor, 10k, ¼ W
1 resistor, 1k, ¼ W
1 resistor, 4.7k, 1 W
1 choke, rf, 2.5 mH
2 terminal strips (see note below)

Note: Terminal strips may be customized from a package of four (eight-lug each) strips purchased from Radio Shack (#274-692) and clipped as in Fig. 2.

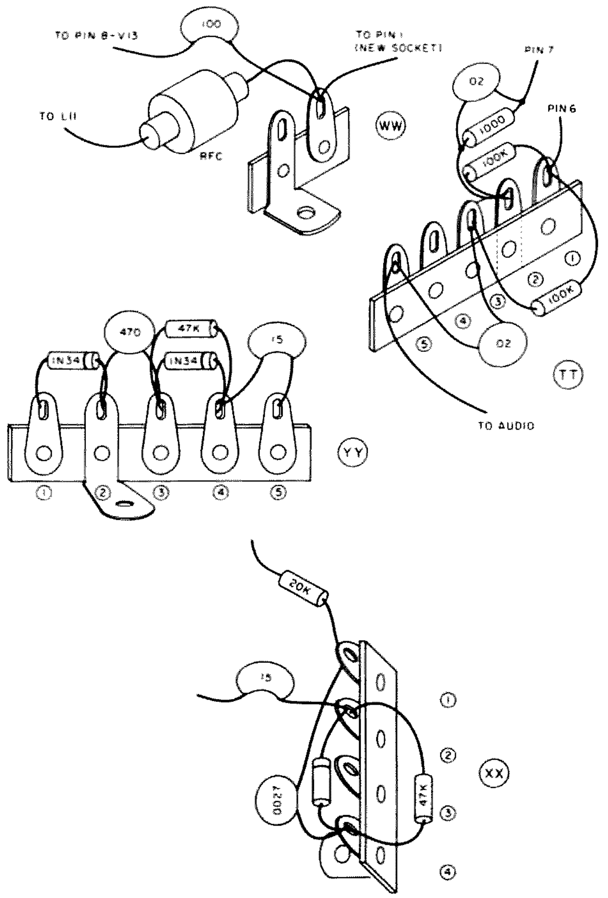

Fig. 2. A package of four terminal strips may be purchased from Radio Shack (#274-692) and cut with diagonals to give the above configurations.

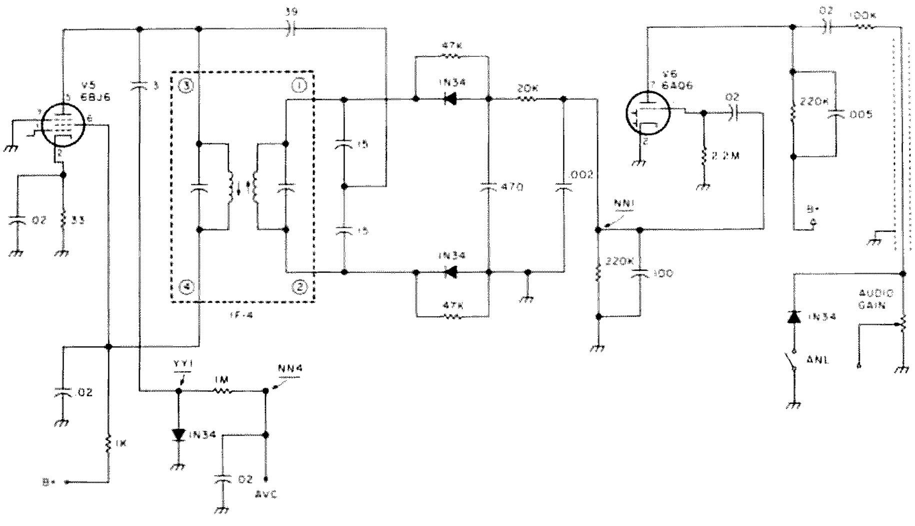

Fig. 3. I-f discriminator and first audio circuitry after modification.

make the modification instructions easier to follow.

Remove the lead between pin #1 of IF-4 and pin #6 of V6 (note: the diode section of V6 will no longer be used).

Remove and discard the 220k resistor connected between lug #2 of IF-4 and pin #1 of terminal strip NN.

Remove and discard the 100 pF capacitor connected between lug #2 of IF-4 and terminal #3 of strip NN (ground).

Remove the banded end lead of the diode from lug #2 of IF-4 and connect this lead to lug #4 of terminal strip PP so that it connects to one end of a 100k resistor.

Remove the lead end of the 1 meg resistor connected to lug #2 of IF-4 and bend the resistor back out of the way. It will be connected later to a pin on a new terminal strip.

Drill 6/32 screw holes in the chassis for mounting terminal strips XX and YY on the left side and rear chassis skirts. See Fig. 1 for locations.

Make the following connections inside the receiver section of the chassis:

Solder one end of a 39 pF capacitor to terminal #3 of IF-4.

Solder one end of a 3 pF capacitor to the same (#3) terminal of IF-4.

Solder one end of a wire about four inches long to terminal #2 of IF-4.

Solder one end of a wire about four inches long to terminal #1 of IF-4.

Solder one end of a wire about five inches long to terminal #1 of strip NN.

Mount components on the new terminal strips XX and YY as shown in Fig. 2. Mount strips XX and YY as shown in Fig. 1.

Solder the free end of the 39 pF capacitor to terminal #5 of strip YY.

Solder the free end of the 15 pF capacitor connected to terminal #2 of strip XX to terminal #5 of strip YY.

Solder the free end of the 20k resistor from terminal #1 of strip XX to terminal #3 of strip YY.

Solder the free end of the 3 pF capacitor from pin #3 of IF-4 to terminal #1 of strip YY.

Solder the free end of the 1 meg resistor (which was earlier disconnected from lug 2 of IF-4) to terminal #1 of strip YY.

Solder the free end of the wire coming from terminal #1 of strip NN to terminal #1 of strip XX.

Solder the free end of the wire from pin #2 of IF-4 to terminal #2 of strip XX.

Check to be sure that all connections to strips XX

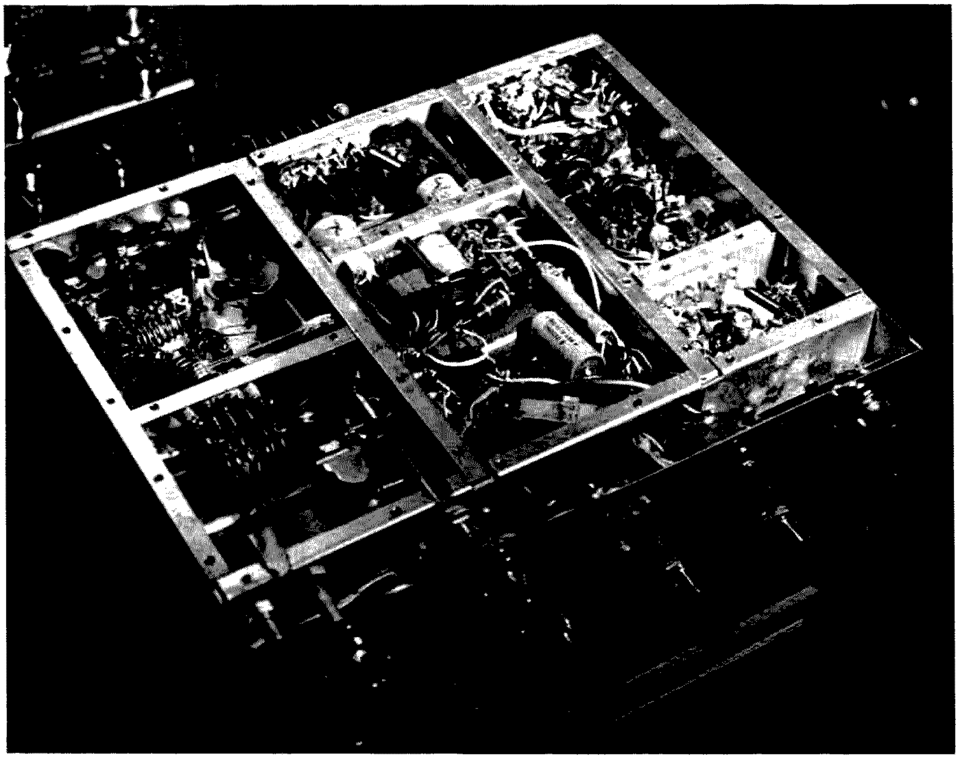

The phase modulator is installed in the transmitter section shown in the upper left corner. Components needed to convert the AM detector to a discriminator are installed in the upper right compartment.

and YY have been soldered.

Caution: Be careful not to substitute capacitors larger than 15 pF across the secondary (pins 1 and 2) of transformer IF-4, or it will be impossible to tune the transformer during alignment of the discriminator.

Aligning the Discriminator

To perform the alignment, you may use either the receiver's S-meter or you may use a dc vacuum tube voltmeter (VTVM). Use of the VTVM is preferred since small increments of change may be more readily seen during alignment.

If you are using a VTVM, connect its negative lead (connect the positive lead to the chassis) through a 100k resistor to the junction of three components— the diode, the 1 meg resistor, and the 3 pF capacitor—at terminal #1 of strip YY. This is the avc voltage which will be of negative polarity and about one to two volts magnitude. Noise should cause the VTVM to peak at about 0.2 volts.

If the transceiver were properly aligned before the modification project was begun, you should not have to adjust any intermediate frequency transformers except IF-4, which is now the discriminator transformer. Refer to Fig. 3.

Allow about 15 minutes for warm-up of the HW-20. Tune the transmitter dial to approximately 147 MHz and set the "spot" switch to its "on" position. With the avc switch on and the "squelch" control set fully counterclockwise, tune the receiver to the transmitter's frequency. Adjust the receiver's main tuning control for either maximum VTVM reading or maximum S-meter reading. (Note: The rf gain control should be set to its maximum clockwise position.)

Using a slug tuning tool, adjust the slug nearest the top of the IF-4 transformer, tuning it for maximum VTVM or S-meter reading.

Push the tuning tool carefully through the top slug until it engages the bottom slug of IF-4. Slowly turn this slug in the direction that gives an increase in noise output from the transceiver's speaker. There should be a buildup of noise until, suddenly, the receiver quiets. This null is very sharp. Adjust the bottom slug on both sides of this null until maximum quieting is achieved, then carefully withdraw the tuning tool from the transformer.

Turn the "spot" switch off and the noise should reappear. Turning the "spot" switch on and off should alternately quiet the receiver and bring up the noise.

If you can find a strong two meter FM signal on the air, it may be advantageous to use it for alignment instead of using the "spot" signal. Be sure to tune the receiver for maximum S-meter reading or maximum VTVM reading before you adjust the IF-4 slug for a null (full quieting). If you fail to do this, maximum S-meter reading and maximum undistorted audio output will not occur at the same spot.

If the receiver dial needs calibration or further i-f alignment, follow instructions contained in the Heath manual.

Modifying the Transmitter

As you did with the receiver, check to be sure that the transmitter portion of your HW-20 is operating properly before you begin this modification procedure.

Remove crystal sockets X1 through X4 from the rear portion of the chassis.

Remove the wire from the 100 pF capacitor at the crystal selector switch and bend it back out of the way. It will be connected again later.

Remove the crystal selector switch and its mounting bracket. Neither will be used in this modification.

Using a 5/8" socket punch, cut a hole in the chassis in the space that was formerly occupied by crystal socket X1. Insert the tube socket punch draw-down bolt through the crystal socket X1 hole that is located nearest the selector switch you just removed.

Mount a seven-pin miniature tube socket and shield base in the 5/8" hole next to the filter condenser can. Position the socket so that pins 5, 6, and 7 face the rear apron of the chassis (see Fig. 4).

Solder the 100 pF capacitor lead (formerly attached to the crystal selector switch) and a four-inch length of wire to pin #6 of the new tube socket.

Solder a 1k resistor and a .02 uF disc capacitor combination to pin #7 of the tube socket.

Solder a 12-inch length of wire to pin #4 of the tube socket. The free end of this wire will be connected later to pin #4 of V13.

Place a ground lug under the tube socket mounting screw and solder it to pin #3 of the socket.

Solder a four-inch length of wire to pin #1 of the socket.

Assemble components on terminal strip TT as shown in Fig. 2 and mount the strip adjacent to the new tube socket (per Fig. 4). Mount terminal strip WW under the same mounting screw used to secure TT and position it as shown in Fig. 4.

Solder the wire from tube socket pin #1 to the

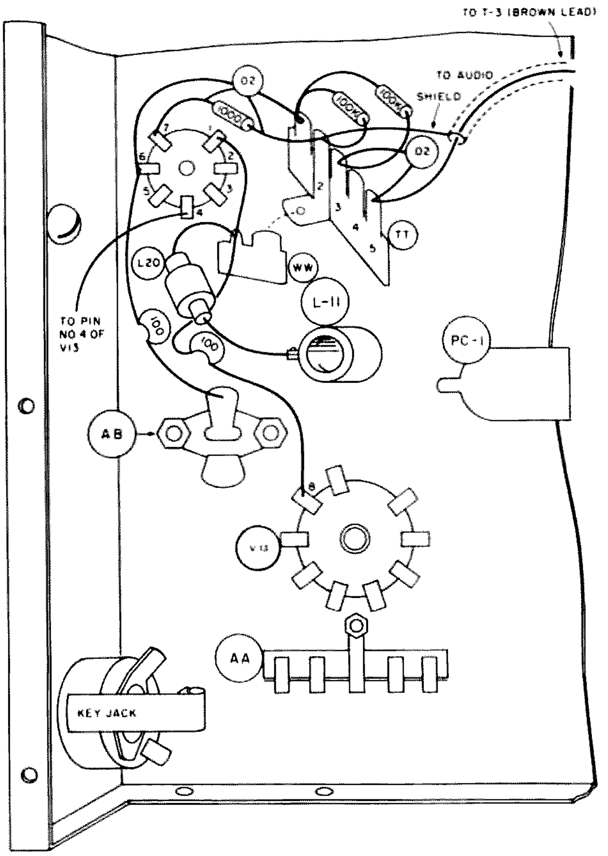

Fig. 4.

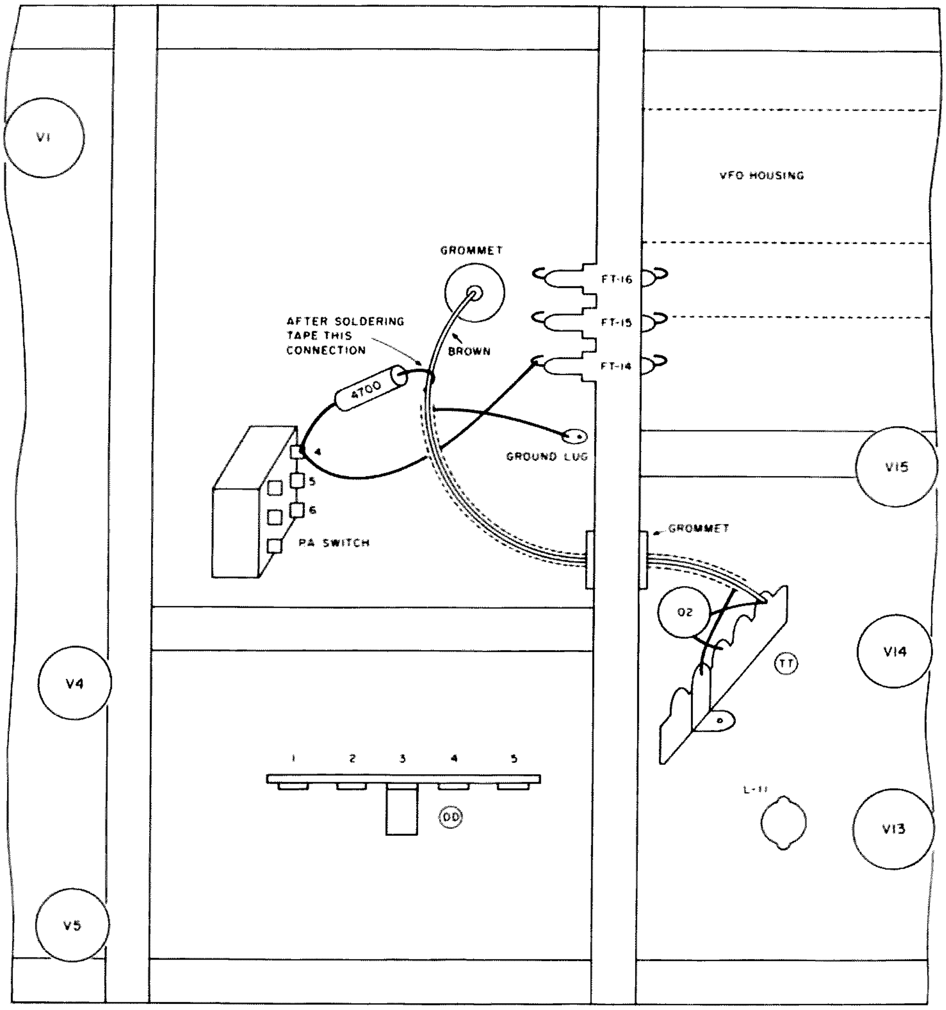

Fig. 5.

ungrounded terminal of strip WW. Also solder a 100 pF capacitor from this ungrounded terminal to pin #8 of V13.

Mount rf choke L20 between the ungrounded lug of strip WW and the top terminal of coil L11.

Route the 12-inch long wire from pin #4 of the new tube socket along the chassis apron and solder its end to pin #4 of V13.

Solder the lead from pin #6 of the tube socket to terminal #1 of strip TT.

Solder the free end of the 1k resistor/.02 uF capacitor combination connected to pin #7 of the tube socket to terminal #2 (ground) of strip TT.

Solder the inner conductor of a small shielded cable or coax cable to terminal #5 of strip TT and solder the braided shield to terminal #2 of TT. Route this cable through the grommet used to bring the main harness wiring into the rf section of the transmitter. It will be a close fit so use an awl (carefully) to aid your pushing the shielded cable through the grommet.

Remove the brown lead from feedthrough FT-14 on the audio section side (not the vfo side) of the feedthrough. This brown lead comes through grommet B (which is located in the audio section) from the modulation transformer.

Solder one end of a 4.7k, 1 W resistor to terminal #4 of the push-pull "PA" switch (see Fig. 5). Solder a wire to this same switch terminal #4 and connect it to feedthrough FT-14 from which the brown lead was removed.

Solder the brown wire from the modulation transformer to the free end of the 4.7k resistor. Also solder the center wire of the shielded lead coming from the rf section to this 4.7k resistor lead. Solder the cable's shield to the nearest available ground lug.

Insert a 6J6 tube in the new miniature tube socket and slide a tube shield over the tube.

Transmitter Alignment and Audio Adjustment

Turn the transceiver on and allow it to warm up for several minutes. Tune the transmitter dial to 147 MHz. Set the VTVM to read a negative dc voltage on its 15-volt range. Connect the negative probe in series with a 100k resistor to pin #8 of V13. The positive probe should be connected to the chassis.

To better understand this procedure, refer to Fig. 6 for the following operations.

Connect the microphone to the transceiver and press its push-to-talk switch. (An alternative to this step is to slide the "AM-CW" switch to its "CW" position.)

Adjust the slug in coil L10 for maximum indication on the VTVM.

Release the push-to-talk switch (or slide the "AM-CW" switch to its "AM" position).

Remove the resistor and negative probe from pin #8 of V13 and attach them to pin #2 of the same tube (V13).

Activate the microphone switch (or "AM-CW" switch) and tune coil L11 for maximum indication on the VTVM. Release the mike switch (or "AM-CW" switch).

Switch the VTVM to its 15-volt ac range and attach the VTVM resistor/probe combination to terminal #5 of strip TT (audio line coming from the modulation transformer). Rotate the modulation level control located on the rear skirt of the chassis to its fully counterclockwise position.

Press the microphone switch, and, as you talk in a normal voice into the mike, advance the modulation level control clockwise until you get an eight- to ten-volt indication on the VTVM. Unless the transceiver was in need of alignment prior to the modification, no further adjustment should now be necessary. If, however, transmitter alignment is required, refer to the HW-20 manual and proceed as directed.

If another two meter FM

receiver is available, listen to your HW-20 as you touch up the modulation control to be sure that overdeviation and distortion do not occur.

Final adjustment of the modulation level control can be made on the air as you are checking the transceiver's operation while talking to another station.

On-the-Air Operation

It's a simple matter to set the transmitter's frequency for simplex operation. You merely beat the transmitter signal against the incoming signal by using the "spot" switch and adjust the transmitter dial to obtain a zero beat.

If you own a frequency counter, use it to tune the transmitter frequency to "bring up" a nearby repeater. If you don't have a counter, you can get by very well without it. It's possible to activate most repeaters merely by tuning the Pawnee transmitter to their receive frequencies, relying solely on the dial calibration for hitting the repeater.

If, after you "trip" the repeater, you receive a report that you are slightly off frequency, adjust the main transmitter knob to slide up or down the band to hit the repeater receive frequency exactly.

A Footnote

With the modification described above, you can have a hot transceiver that is capable of working any of the thousands of two meter FM repeaters that are now operating throughout the country.

The modified HW-20 is primarily a rig to be used in the shack. But, if you prefer to operate mobile, the Pawnee's receiver and vfo are certainly stable enough to serve you well in that capacity.

Shep's modified Pawnee has been operated on the air in central Florida for several months and has proved to be more than satisfactory. Modulation reports received thus far have been flattering. The 10-Watt output has produced a signal strong enough to trigger most repeaters operating within a 100-mile diameter.

If you have an HW-20 occupying shelf space in your shack, dust it off and move it into your active equipment lineup.

Just the name "Pawnee" conjures up visions of an American Indian brave whose territorial domain encompasses the great hunting ground in the sky. As you will find when you recycle your Pawnee, it has much scouting to do before it is ready to be placed atop its burial mound and commended to the care of the Great Spirits beyond. ■

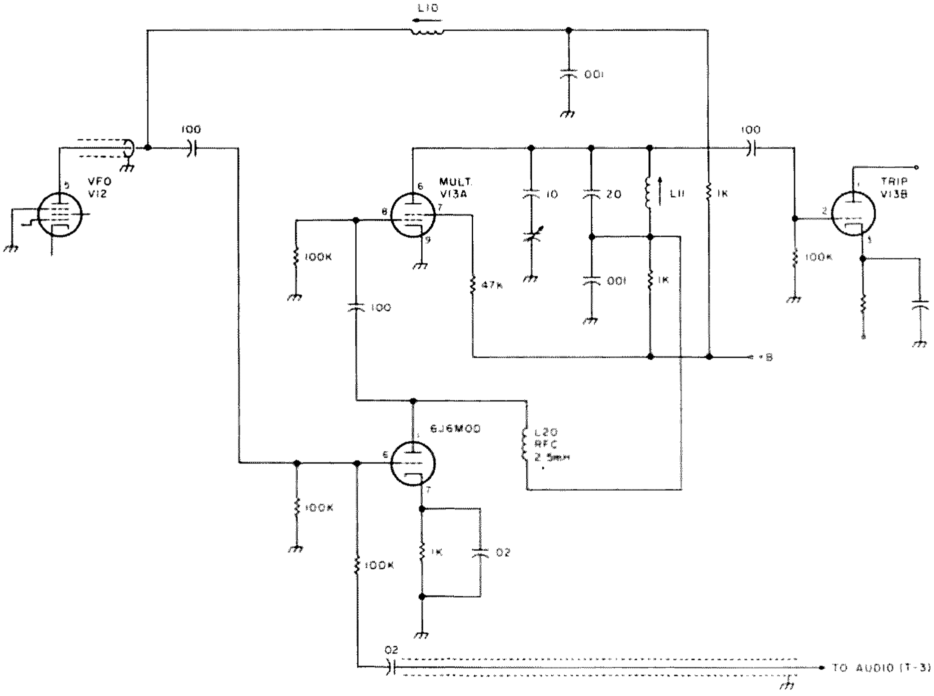

Fig. 6. Vfo, modulator, and multiplier circuitry after modification.

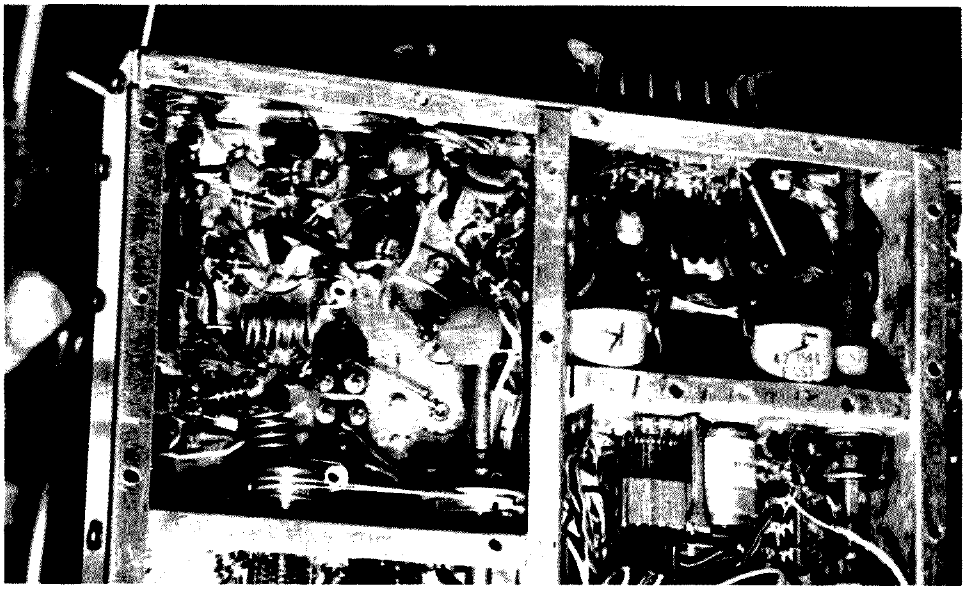

A close inspection of the compartment in the upper-left quadrant shows the phase modulator tube socket and two terminal strips that were added to modify the Pawnee transmitter.

James E. Seidel WA6FEI
1066 N. Westside St.
Porterville CA 93257

High Seas Adventure —Ham Style

—part I

Photos by Jules Wenglare W6YO

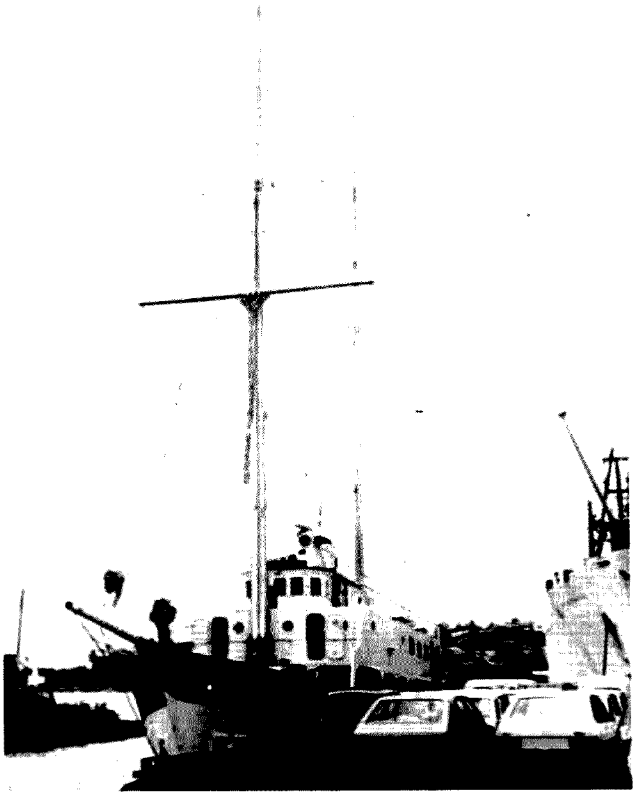

For Jules Wenglare W6YO, the Yankee Trader, *of the Windjammer Cruises, Miami Beach, Florida, was home for his 10-month around-the-world cruise. The* Trader, *pictured here somewhere in the West Indies, stopped at some 53 ports around the globe on her 30,000-mile search for adventure to strange and exotic ports of call. For Jules, it could be called a worldwide DXpedition.*

To embark on a 10-month around-the-world cruise to strange and exotic ports of call is true adventure in itself. But if you take amateur radio and put the two together, you have the greatest sea experience and personal search for adventure ever possible. For one ham, this rare opportunity is no longer a dream.

Jules Wenglare W6YO set sail on February 15, 1977, from Freeport in the Bahamas aboard the *Yankee Trader* to chase adventure, explore the wonders of the world, and operate amateur radio from the four corners of the globe. This voyage visited the ports and countries of Haiti, Balboa, C.Z., Ecuador, Galapagos, Tahiti, Fiji, and American Samoa, with several stops in between. The *Trader* also docked at Singapore, Madagascar, and South Africa, some fifty-three ports in all, before the cruise headed back to the Bahamas and Jules took a flight home to California.

Jules met many an amateur radio operator on a face-to-face basis during this trip. One of those was Father Dave Reddy CEØAE on Easter Island. If you have read "Pitcairn Island — an inside look at VR6TC," which I wrote for the March, 1977, issue of *73*, you'll know all about Tom Christian, a direct descendant of Fletcher Christian of *HMS Bounty* fame. Jules spent almost two days on Pitcairn with Tom and his family.

I may be a ham and I may be a writer, but I'm not a magician. So, before I go any further and you begin to wonder how I have come up with so much detail about this trip, I'll let the cat out of the bag — right here.

Jules and I know each other, personally, and we made prior arrangements for the writing of this article. I made several contacts with him as W6YO/MM and received several of his letters from different ports, but the main system for information has been through cassette tapes he made of the trip at intervals along the way. These have given me more interesting material than I can possibly use here. It took over eighty hours to transcribe twenty-five 90-minute tapes and eight hours to view and edit photos from thirty boxes of color slides. The results are what you will read here. I only wish that everyone could have had the chance to hear the trip as I

have. It was most enjoyable.

With a 15 and 20-meter dipole antenna at about 100 feet, a heavy-duty battery and charger for emergency power, his Swan 350, an Atlas 210X — on loan courtesy of the Atlas people in Oceanside CA — and everything set up in cabin 25, stern, portside, Jules and the *Yankee Trader* were sailing en route to their first port of call — Cape Haitien, Haiti, West Indies.

Jules's first contact at sea as W6YO/MM was with a French station. He said he worked both Australia and New Zealand on long path; he also worked South Africa. He said he made contact with an operator aboard a cruise ship from England that had just left New Caledonia on her way to Fiji with 1300 passengers and a crew of 800. That's a lot more than the 50 passengers aboard the *Trader*.

When the ship arrived at the rugged north-central coast of Haiti, it was in a drizzling rain, and Jules didn't get to take the sight-seeing tours he had planned. However, he did get to go to an American religious broadcast station, 4VEH. The transmitters there were the old vintage type and air cooled. The station has a combined power output of 27,000 Watts. One of the antennas was a two-element tri-band quad up about seventy-five feet, fed directly with large coax.

"Cape Haitien," Jules wrote, "is where Christopher Columbus, in the year 1492, made a landing and lost his flagship, *Santa Maria*. The crew remained ashore, and, when Columbus came back the following year to pick them up, there was no sign of their existence. This was when the Indians were cannibalistic."

Jules did get to see some of the city, and on the last evening in port he took in a voodoo dance. "The performer danced around on broken glass bottles, fire ashes, and set torches of flame against his head and body. Of course," Jules mentioned, "he had drunk some potent alcohol before performing. From our inside-the-ring view, we could really smell it."

The ship sailed on Monday, the 21st, to Port-au-Prince, the capital of Haiti. Upon arrival, Jules mentioned seeing two 400-foot towers which he believes were part of the U.S. Marine station of long ago. The antenna was of the cage type and the end insulator near the ground was about seven or eight feet long with corona rings eighteen inches in diameter. Jules said he used to work HH7C of the Marines here in the 30s and relayed messages to his home in Pennsylvania.

Jules viewed the President's Palace, downtown, where there bristled the latest looking towers and antennas of an elaborate communications system. The government buildings were very impressive — all white with gold domes.

Since U.S. hams can't operate amateur radio in most foreign ports, Jules always welcomed getting back to sea. While en route to Martinique Island, it was radio time, again. He worked Archie K4IBO in Miami, where he had stayed a couple of weeks before this trip began. He also worked VK land and two Israeli stations along with some stateside contacts. It's amazing what a simple dipole can really do.

Jules made contact with Austin VP2DAJ. "He spoke perfect English," Jules stated. "There were five visitors in the cabin and Austin really did an excellent job of describing the island of Dominica. The QSO lasted over an hour."

The *Trader* sailed "about twelve to fifteen miles north of Aves Island, a tiny island about 300 by 50 yards and eight feet high, where, in August of 1958, I, along with Danny Weil of the famous Yasme DXpedition and two YV hams stayed one week to activate YV0AB. It was some experience for me," Jules wrote, "sailing there and back for one week from St. Thomas in the Virgin Islands where Dick KV4AA was directing the Yasme original operations."

After almost a thousand miles of sailing across the Caribbean Sea, the *Trader* dropped anchor at Fort-de-France, Martinique, next to the *Yankee Clipper*, another Windjammer cruise ship. Within a short time, the *Trader* was placed in drydock for standard procedure certification and repairs. They had planned on doing this later in Singapore but decided to stop here instead. The workers here arc welded dozens of zinc plates to the ship's hull to prevent electrolysis from eating holes in her.

When the ship arrived here, Jules had made 140 contacts with all continents, eight long-path contacts into VK and ZL land, and some thirty phone patches for passengers aboard ship. Since he couldn't operate in port, he spent a lot of time working on the antenna system.

This is Trans World Radio, a religious shortwave broadcast station on Bonaire Island. Jules's interest in broadcasting is due to his association with the Voice of America in Delano, California. He was employed at the VOA prior to his retirement. Jules spent many hours at TWR viewing the transmitter setup.

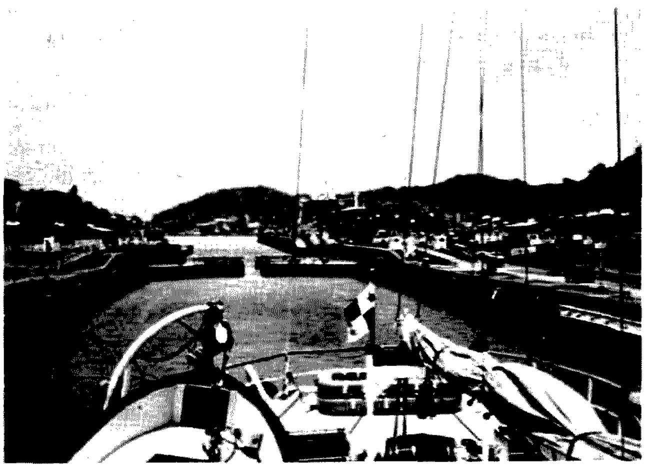
The Trader *as she journeys through one of the many locks in the Panama Canal. There are six locks that either raise or lower a ship as it travels nearly 50 miles in 10 hours from the Atlantic Ocean to the Pacific. Jules stated, "It was an interesting and scenic trip."*

Father Dave Reddy CEØAE on Easter Island. Father Dave (as he prefers to be called) is a member of the A1 Operator's Club and the holder of the Eagle Scout Award. He is world renowned and sought after as a ham operator. Father Dave is the pastor of Santa Cruz Church on Easter Island.

Jules had previously made up everything for a rotatable two-element quad, but it didn't get installed. It rained too much and he didn't like the idea of hanging from a bosun's chair for such a difficult installation. He did, however, put up an antenna on top of the 135-foot foremast – a touchy situation at that height swinging from that bosun's chair. He said there were two confident people handling the control ropes from the bottom. Jules said, "It was an exhausting job to install the antenna, connections, and coax."

After a week in port, the ship set sail for Bequia, a small British island. He reported seeing several beautiful sailing yachts here in the harbor from all over the world. And, for the first time in ten years, he went snorkeling. "The visibility wasn't too good," Jules said. "The view under water was a little disappointing."

It rained the following day, and he didn't go anyplace. He did report meeting a retired California school teacher who was on a scholarship tour. She was a ham but didn't mention the call. The rig she had with her had gone out, so Jules took some messages and later relayed them back to relatives in the States advising them that everything was alright and she was trying to get the equipment repaired.

The stops at some of the ports visited were of short duration and very little occurred in Jules's reporting. After leaving Bequia, he handled some phone patches and did some remodeling of the equipment shelves.

There are double bunks in cabin 25. Jules slept on the bottom and used the upper as a storage area for some extra gear and baggage. He bought a small folding chair in Florida to use at his operating table. He said the small trickle battery charger wasn't keeping the battery up enough. To make matters worse, the alarm clock he bought for the trip lasted two days.

Bonaire is about 150 miles off the coast of Venezuela, slightly northwest of Caracas. This was the last stop for the *Trader* before heading for the Canal Zone. While eating lunch here aboard ship, Jules had a visit from an engineer and his two sons from Trans World Radio, a religious shortwave station on the island. The engineer was Chuck PJ4CR. They were given a tour of the ship and the radio shack. A little later, two more hams and their families came aboard and received the guided tour.

Jules took a tour, also. His went to Trans World Radio. He said it was quite impressive with its 550-foot towers with changeable direction capability. The full power capacity of the station is 3 megawatts. They rewind their own transformers here, as it's cheaper than buying new ones. They also have their own riggers who climb these huge towers every week, apparently for inspection. Jules said he spent a great deal of time at the station.

Jules's fascination with broadcast stations is attributed to his association with the Voice of America in Delano, California. He was employed there for about nine years before retiring in December of 1976. I took a tour of that station and can say that it was fascinating to see the setup for each individual transmitter and the antenna systems used. Modulation transformers that stood six feet tall, tubes that were rated at 100,000 Watts, and miles of copper tubing for the antenna transmission lines. It is also of interest that about half the employees at the VOA are hams.

After leaving Bonaire, Jules handled several phone patches for some of the passengers. "For one person, I made six different efforts at six different locations without any answer by phone. It was disappointing that he couldn't find anyone at home for those numbers."

Jules had been at sea for one month now as they headed for Cristobal, Canal Zone. He worked Hal KZ5HP and told him that the *Trader* would be arriving in several hours. When it did arrive, he met Hal and his XYL, Norma.

Jules went to the U.S. post office and made arrangements to pick up mail for Pitcairn Island. A month before, another ship had picked up over two dozen bags for the island. This time there were only two – about fifty pounds. In addition to this mail, the *Trader* had some freight aboard for Pitcairn.

Before the *Trader* sailed through the Canal itself, Jules took a train ride along the Panama Canal and through the jungle. He stopped at Fort Clayton for a visit but gave no details.

While going through the Panama Canal, the passengers, and any person within several miles, received quite an entertaining surprise. Jules mentioned that four or five C-130 planes dropped hundreds of paratroopers from their bellies. The sky was filled with descending white parachutes. It was a very unusual treat.

After going through the three stages of Gatun Locks, the ship had been elevated to Gatun Lake, 85 feet above sea level. About thirty miles across the lake, Pedro Migual and two Miraflores Locks lowered the *Trader* back down to sea level. The trip from the Atlantic to the Pacific Ocean took about 10 hours. Jules stated, "It was an interesting and scenic trip."

When the *Trader* docked at Balboa, C.Z., some of the passengers had a desire for – ice cream? Yes, homemade ice cream. They pooled some money and – you guessed it – Jules was elected to go after the ingredients.

He said he couldn't locate case lots of powdered milk so he bought six large boxes of KLIM (KLIM is milk spelled backwards). He said he remembers buying KLIM in Turkey back in the 1940s. He also bought some pure Hershey chocolate for the topping along with the remaining ingredients and two ice cream mixers. It took a couple of hours to locate all the items needed, and the taxi bill alone came to $12. About 10 pm that night, aboard the *Trader*, the passengers ate homemade ice cream. "It was a little bit soft," Jules commented, "but good."

While in port, Jules did

some more antenna work. He cut down one antenna and put up another one for 15 meters at the 135-foot height. He was up there for almost three hours. The next day, he went up for another three hours to complete the installation. The first 15 meter antenna didn't want to cooperate on the swr. No matter what he did to it, the swr wouldn't come down below a 5 to 1 reading. He said the steel ship must have something to do with the problem. On 20, the swr is 1 to 1.2 and real hot.

Before the ship left, he met Ernst KZ5EK, a doctor who works for the U.S. Public Health Service. Jules went to his home, met his XYL, and saw the ham room.

After leaving Balboa, Jules made his first 15 meter contact of the trip. He was tuning up the rig when John W6UZ broke in and said, "Is that you, Jules?" John and Jules are very good friends and have been meeting on 20 almost every day. John is with the VOA in Delano.

Later that evening, contact was made with Bud HC8GI on Galapagos Island. Jules told him that some of the passengers, including himself, were going to make a special trip there by charter plane from Ecuador since the *Trader* wasn't scheduled to stop at the island. Jules made several other contacts, then ran a few more phone patches.

Apparently it is a custom to celebrate or have a party when a ship crosses the equator. The *Trader* was no exception, and it must have been one of the most exciting times Jules had. He was laughing so hard when he recorded the details that I couldn't get enough information to put down. I do know that everyone was dressed up in an unusual fashion and a couple of the passengers had mop heads for wigs. Jules acted as a surgeon and, from what I understand, was the life of the whole thing.

Guayaquil (pronounced Y-Keil), Ecuador, is just below the equator and inland about forty miles. When the ship arrived, Jules learned that someone was looking for him on the pier. It was Ray HC2JX and his XYL, Helen HC2HV. After a very nice conversation, the hospitality of these two amateur radio operators was graciously extended to Jules and seven other passengers. They all – how, I don't know – piled into Ray's car and for the next two hours were given the grand tour of the city of Guayaquil. They went everyplace, with a few stops to get out and stretch their legs. With four people in the front and six in the back, I think some laps must have been a little tired.

That evening, after the excursion around town, Ray and Helen further demonstrated the hospitality so often found in the ham fraternity with an invitation to dinner. Jules went to their beautiful penthouse-type apartment. "It was absolutely elaborate," Jules said, "and the dinner was exquisite." He said it was one of the best-served and most enjoyable dinners he had ever eaten.

The Galapagos island group is 650 miles west of Ecuador and was once known as the "Enchanted Isles." Galapago is, of course, Spanish for tortoise. The Galapagos turtles on the island grow as large as five hundred pounds. The iguana, a lizard, sometimes up to four feet long, is the most fantastic of all the animals on this 15 island group. On Tuesday, March 29, Jules and several other people left by plane from Ecuador and, within two and one half hours, landed on Santa Cruz in the Galapagos Islands.

Aboard a 45-foot ketch called the *Suliday*, they took a tour of several of the islands over the next few days. On one, Jules said, "Some of the seals wouldn't let the people pass on the path, so everyone had to go around them. There were at least 100 seals and numerous iguanas. A bull seal held everyone at bay and even chased some of the party." Jules mentioned that he was one of the first to get by the big bull seal and one of the men that followed came very close to getting caught by a pair of unwelcoming jaws.

Jules described one of the islands as having pink sand. He said it was almost as fine as talcum powder. If you got it in your hair while swimming, it was very hard to get out. On yet another island, he went snorkeling again. It must have been the fact that one could see up to 150 feet deep that persuaded him to go. He said everyone else refused – there were sharks in the area. After seeing the movie *Jaws*, I wouldn't have even stuck my big toe in that water.

Jules met Rolf HC8WW on Floreana. Rolf was born there in the Galapagos Islands. "A real nice fellow," Jules said, "who could really talk radio."

When they arrived at Santa Cruz, Jules went to the Darwin Research Station. He visited the pens where some of the large turtles are kept. These turtles are so big that a child can sit on one of their backs and take a nice ride.

He met and went to the home of Forrest HC8FN and spent a lot of time with him. Jules mentioned that he had a very unusual antenna. It was a three-element beam, but the center element was used for 40 meters. Jules also met Bud HC8GI and his XYL, Doris. He gave Bud 200 feet of coax that Hal KZ5HP had given him to deliver.

There was a lot more activity enjoyed on Galapagos than what Jules mentioned. He tried to cover the highlights of interest without going into a lot of detail about everything he did. This was also true in recording information at other *Trader* ports of call.

When Jules returned to Ecuador, Ray and Helen were there to meet him. They spent several hours aboard the *Trader* to see the ship and visit with him.

During this tape, Jules said that it's nice that, when you meet hams in person, they turn out like they have been on the air. On the air, it's easy to make friends, but, in person, it's sometimes a different thing. So far, everyone has proven that hams can be wonderful people in person, also.

The *Trader* set sail from Ecuador for a 10-day voyage to Easter Island. Jules made

Jules Wenglare W6YO and Father Dave Reddy CE0AE standing beside one of nearly a thousand solid rock carvings on Easter Island. Although some of these stone head carvings are nearly 50 feet high, the average is about like this one – 20 feet tall.

Easter Island, a 64-square-mile dot of land where mysterious goliath monuments stand as silent survivors of a lost culture. Their distant past has puzzled scientists for generations. The solid volcanic rock used was provided from the volcano Raraku. Monuments weighing up to 90 tons were chipped from soft stone and carried up to 10 miles away where they were placed in various locations.

contact with Tom Christian VR6TC on Pitcairn, and they talked about his forthcoming visit there. While Jules was recording this, he stated: "Yesterday I made contact with Father Dave CEØAE. Oh, I should be looking for him now, it's schedule time." (Click) Five seconds later, Jules said he made contact and they talked for quite some time. (The actual time lapse from his schedule with CEØAE and his return to the recorder was two days.)

Jules said that he really had a chance to work a lot of stations during this long trip. The band openings were tremendous with contacts into Iran, India, and the Philippines, to mention a few. Each day, he would check into the South Pacific MM Net and report the ship's position. He also ran a lot of phone patches.

If you work a rig long enough, something is bound to happen. It did. The power supply went out. Jules said that the problem was in the bridge rectifier circuit and was quickly repaired.

Jules was going to do some more antenna work at sea while the ship had good smooth sailing weather. He got up to the 50-foot height and learned that it was too rough up there to work. He was being tossed around too much and had to come down and wait until the ship was in port. I guess the mast acted like a bullwhip even though the ship itself was seemingly smooth.

The food aboard the *Trader*, Jules says, was very good. But, with a million square miles of ocean to fish in, why not use it? One of the passengers caught a 10-pound tuna that took more than a half hour to land. The ship was sailing at about 11 knots and the pull was very heavy. It's a miracle he got it aboard. "He really worked up a sweat catching that one," Jules said.

Jules also mentioned that some of the passengers saw dolphins chasing a school of flying fish. I would have enjoyed seeing that myself.

Some 6,175 miles into this around-the-world cruise, the *Trader* dropped anchor in Hanga Roa (Cook Bay), Easter Island. One of the first persons Jules met after going ashore was Father Dave Reddy CEØAE.

Jules visited the church and then went to Father Dave's home. That evening, they went on the air but made only a few contacts. The rig had developed a few problems: no drive, no output.

The following day, Jules toured the island and saw many of the huge stone head carvings which ancient Polynesian artisans carved from volcanic rock. These purse-lipped statues, numbering close to a thousand, are scattered around the perimeter of the island in shrines. The tallest figure is somewhere around 50 feet tall; the average height is about 20 feet. Jules said it was "very impressive seeing these statues scattered about the fields for miles. It was a sight to see."

Jules went right up on top of the rim of one of the extinct volcanos with Father Dave. They also took a dip in the ocean during the tour. Jules mentioned that, while they were swimming, sand blew all over his camera on the beach. He later cleaned it out but said the shutter would stick sometimes. (Unfortunately some of his pictures taken from this island stop to other locations were blank. The shutter still sticks about every third photo.)

Jules tried to locate the problem in Father Dave's rig but had no success. They went aboard the *Trader* and listened for a W6 but had no success on 20 meters. On 15, at least a dozen calls were made for southern California. Finally, contact was made. A message was given to the other operator and a phone call was made. Shortly, word came back: The Atlas Company hereby grants permission to leave the Atlas 210X on loan to Jules with Father Dave.

When Jules and Father Dave got back on shore, the first thing they did was get that rig hooked up. It was hamming time. They made many contacts that afternoon, thanks to Atlas and to Jules for his consideration and thoughtfulness.

The departure time on Easter Island had arrived, and the ship was barely under way when Jules got on the air. Most of the contacts were stateside. He worked some foreign countries and that evening worked Father Dave, only a few hours after leaving his home.

Aboard the *Trader*, there is a small newsletter printed about the various stops the ship makes called the *Trader Tales*. Copies are sent out by some of the passengers like letters. In the one detailing the Easter Island visit, Jules wrote the following, with the heading "He Who Stands Tall On Easter Island": "The mysterious race which carved the hundreds of twenty-foot statues on Easter Island looked up to their statues. Today's population of 2000 looks up to and depends on Father Dave Reddy, not only in religion, but because of his ham radio station CEØAE, which is world renowned and sought after.

"Father Dave himself is a tall, impressive, jovial person and devoted to his church work and his hobby, which helps keep people on the island and amateur radio operators around the world happy."

Not too long after the *Trader* left Easter Island, I made contact not only with W6YO/MM3, but also with Father Dave CEØAE, both at the same time. It was one of those things we would like to have happen, but it usually doesn't. This time it did. We had a very enjoyable three-way QSO.

Jules made contact with Tom Christian VR6TC on Pitcairn, the island the ship was now heading for. They discussed the weather and the possibility of not being able to stop there. If the small storm raging at Pitcairn didn't subside soon, the *Trader* might not be able to stop.

In the March article about Pitcairn Island and VR6TC, I noted that Bounty Bay was the only entrance and exit from the island. It is, by

world standards, not big enough to even be called a bay. A small indentation in the sheer cliffs has enabled these people to launch their longboats and go out to waiting ships. A ship cannot go in. If the weather is too severe, the longboats do not go out. The Pitcairners and the passengers aboard the *Trader* were hoping the weather would change from bad to favorable. The *Trader* was due to arrive in less than two days.

The weather did change. This, to Jules, would be one of the most memorable experiences in his life: a face-to-face QSO with one of the most sought-after contacts in amateur radio — Tom Christian VR6TC, great-great-great-grandson of Fletcher Christian of *HMS Bounty* fame.

Jules not only met Tom, his wife Betty, and their family, but also the OM of Pitcairn himself, Andrew Young VR6AY. He also operated there as W6YO/VR6. Two days after leaving the island, the ship ran into a severe storm and several hams combined forces to provide weather data in order to aid a change in course.

Later in Tahiti, Cook, American Samoa, Fiji, and even Australia, Jules met some more fabulous people in amateur radio. He even saw what is possibly the world's largest great circle map. He also had something unusual happen to him in the jungle on Bora Bora.

Due to the type of trip Jules was taking, the number of stops made, and the adventures which unfolded as each day passed, you will have to wait to see and read about these in the next article in this series. It will be as interesting as what you have already read, perhaps even more so. ■

LETTERS

from page 58

keel. The lineup of letters lambasting you for publishing materials related to fighting fire with fire is a display of distorted self-righteous indignation, and your very willingness to publish these letters shows your liberality even better than it exposes the dangerous mentalities of the writers.

Let me close by congratulating you not only on the fine publication you issue, but also on your exercise of the finest principles of journalism in a free society. Many times the best journalism is that which most people would turn their eyes from, but we've got to keep at it if we're to have hope for our society.

Harry Church WØKXP
Dickinson ND

LAW CHANGING

Man, it finally came! I received the July issue of *73* and was intrigued by all those letters against WA4WDL's article in regard to hamming on the police radar frequencies. I was not upset by any of them.

When the 55 mph speed limit went into effect, no one asked the public—it was just done. When those who knew sent our young to die in places they couldn't pronounce, it was just done! And so now we get radar. Under the guise of protecting us from ourselves, we get irradiated from those who protect.

How naive most of those letters sound when reread with an open mind. If we were to suggest righting a (by vote) wrong, then it could be done. Remember we tried that during Vietnam. We elected our hero, and more died. Now he is taking credit. We did that twice!

Corporations use the law to break the law; the FCC changed CB rules because the law was broken so frequently. Changing the law sometimes requires breaking the law, but rights of property and person prevail. We should all be a bit perturbed at our status as sheep off to slaughter.

Independent thinking is dangerous. It makes those who can't think that way nervous. It becomes a threat. Thanks, Wayne. At times I get disappointed in *73*, but then again we all have our ups and downs. Encouraging it is to see more than just the shirt and tie philosophy, for the world ain't just so, and baby, neither is ham radio.

Jozef Boniakowski WB2MIC
Neptune NJ

MICROWAVE LIBRARY

With the increase in interest in microwave communications (MWC), I suggest that a microwave communications information exchange should be started to collect and distribute MWC information.

For those persons who are interested in the exchange, I will send a list of available articles and the names and addresses of the persons who have written articles and are interested in MWC. This list can be had for an SASE and will be updated every two months. If you wish to have the list sent to you for, say, the next 10 months, just send along 5 SASEs. Then I will notify you when your SASEs are about to run out.

I will also compile a library of MWC data that you, the users of this service, will help compile. You can find the information in books, magazines, and newspapers. If you wish to send in information that you find, send a good photocopy that can be photocopied at a later time for others.

The price of photocopying will be 15¢ for one page or two for a quarter. The price of the articles will be included in the update list which will be sent every two months.

Be sure to include an SASE if you want a reply and if you want to get further updated lists. Don't forget to include as many SASEs as you want. Do not forget to send any MWC data that you may have.

Garold C. Casler
RR #1
Chatfield MN 55923

THE AWAKENING

I read with great interest the letter from WD4BFD in the June issue of *73*, and it brought back more memories about my early days as a ham than I care to remember. I got my Novice license about 12 years ago as a young teenager, back when it was fashionable to be loyal to the ARRL. I cursed you like the Red Baron and branded you a "radical," Wayne, because of your constant criticism of the beloved ARRL. At the time, I wouldn't even buy *73 Magazine* because of your attitude towards the ARRL. As the years passed on, though, I began to notice that when the hams had a problem, almost without fail the League would turn its back on the ham (i.e., a ham involved with the FCC and one of his neighbors in a TVI battle). After awhile, it became evident that the League was glad to take our money and forget us. Unfortunately, I guess this is a lesson in life that most new hams must learn for themselves.

The fact that they sold us out at the 1971 ITU, as they probably will next year, and now the "blackmail" or whatever, should be enough to wake up even the staunchest supporter of the ARRL. It is perfectly OK for the ARRL to spend hundreds of thousands of dollars for that pretty new Headquarters Building so that the honchos can be comfy, but then the League cries that it is too poor to support some of our more prominent hams for trips abroad to try and save us at the 1979 ITU. Newcomers should search the record books and find the last time that the ARRL did something really substantial for the ham community.

Wayne, I apologize for the years that I branded you a radical, and now I want to thank you for being honest enough to tell us what the League does when they get behind closed doors. I hope that in time WD4BFD and others like him will realize that all we get from the ARRL is a con job, and a tighter fitting noose with each passing ITU. Personally, I think the noose they have us wearing now is exactly 237,247.27 MHz too tight.

Dave Allen WB4IAG
APO New York

SKIN DISEASE

I am writing this letter to pro-

Continued on page 160

Don Morar W3QVZ
3663 Hipsley Mill Road
Woodbine MD 21797

Build A Better Beeper

—variable time-interval generator

A while back, a friend of mine requested a scheme for putting beeps (time marks) on magnetic tape. He wanted beeps of 1 second, 5 seconds, and 10 seconds, adjustable in duration from 25 milliseconds to 50 milliseconds. He also wished to have control of the beep pitch. He wanted a timing accuracy of .05%. It looked like some TTL counters locked to the 60 Hz power line and a few 555 timer ICs would do the trick.

To reduce the complexity of the scheme somewhat, we settled on a variable beep-pitch scheme common to all three beeps, but with independent control of each

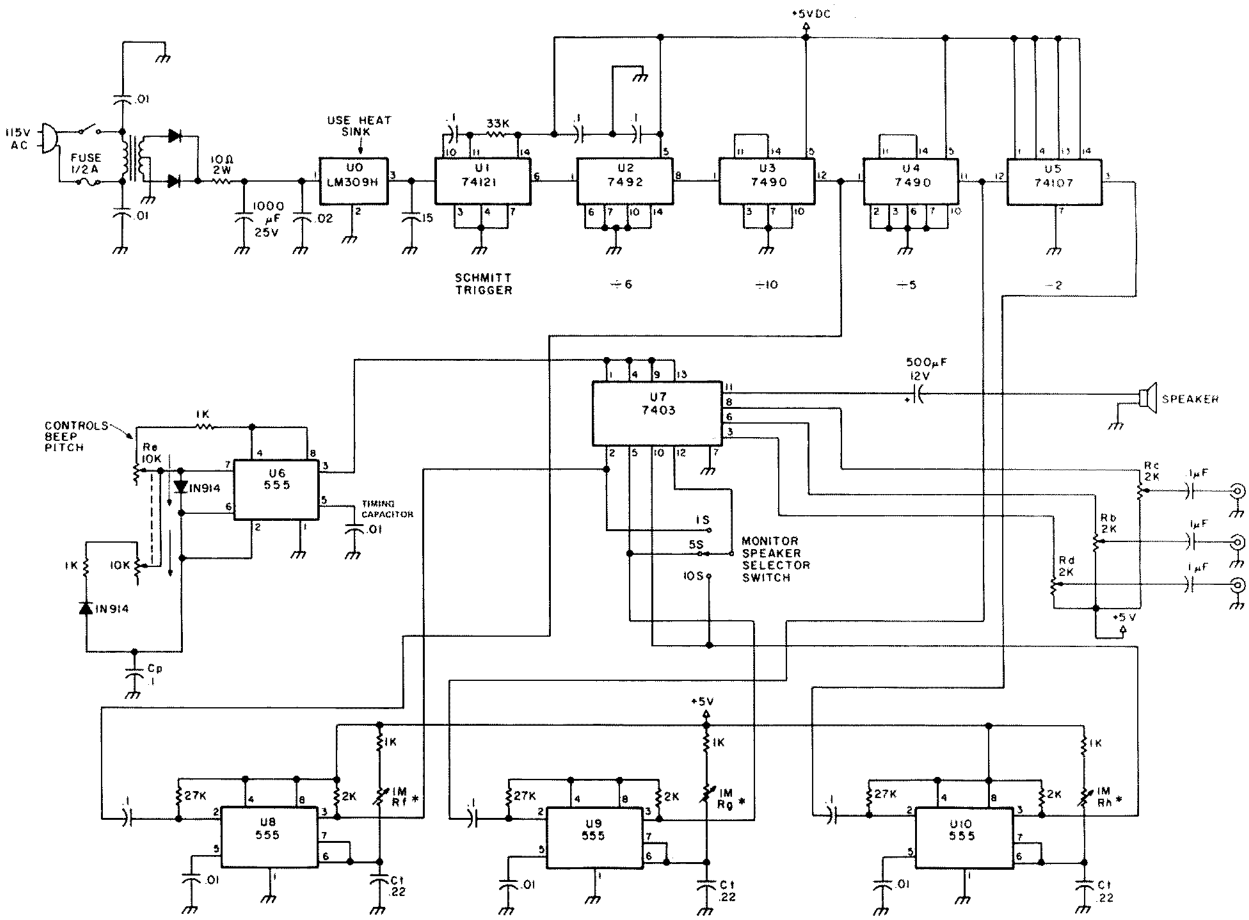

Fig. 1. *Rf, Rg, and Rh control beep duration.

of the three beep pulse widths. Fig. 1 depicts the overall schematic diagram. A 12.6-volt ac secondary winding on T1 supplies about 8 volts dc into the LM309H regulator. All other circuitry is 5 V TTL components.

The 74121 Schmitt trigger is driven by the partially-squared input via zener D3. The 74121 output triggers the succeeding counters to yield divisions of 6, 10, 5, and 2. The negative-going edges out of the counters at A, B, and C, respectively, trigger three 555s connected as variable on-time monostable multivibrators. These adjustable on-time gates are fed to 3 sections of a 7403 NAND gate. The other inputs of each NAND gate section are fed from a free-running 555 connected as an astable multivibrator. Consequently, whenever a gate pulse appears at the output of U8, 9, or 10, a train of pulses supplied by U6 will appear at the appropriate 7403 outputs.

The fourth section of the 7403 is used to drive a small 3" speaker to aurally monitor the desired beeping channel via S1. The desired level for driving a tape recorder input, monitor amplifier, etc., can be adjusted for all three channels via Ra, Rb, and Rc. Perfboard construction was used, as can be seen in the accompanying photos.

I experienced no critical layout problems. With the values for the beep duration shown for U8, 9, and 10, the beep duration could be varied from a click to about ½-second duration. Longer duration times for the 5- and 10-second beep spacings could be readily achieved by increasing Ct on U8, U9, and U10. If independent pitch control is desired on each of the 3 timed outputs, two additional free-running astables could be employed and their outputs fed to the 7403 NAND gate terminals 4 and 9 separately. With the timing capacitor shown for U1, the frequency was adjustable from approximately 200 to 800 Hz. No buffer was used to isolate the speaker monitor selector switch. Therefore, a glitch (switching) transient will generate an extra pulse when switching. A buffer could be added to preclude this if it is necessary to switch the monitor speaker while recording the timing beeps onto tape and not generate glitches. The gates from ICs U8, 9, and 10 could also be used to drive relays via suitable current amplifiers, etc., to provide timed sequences. If a divider chain using programmable dividers were employed, any desired sequence could be obtained.■

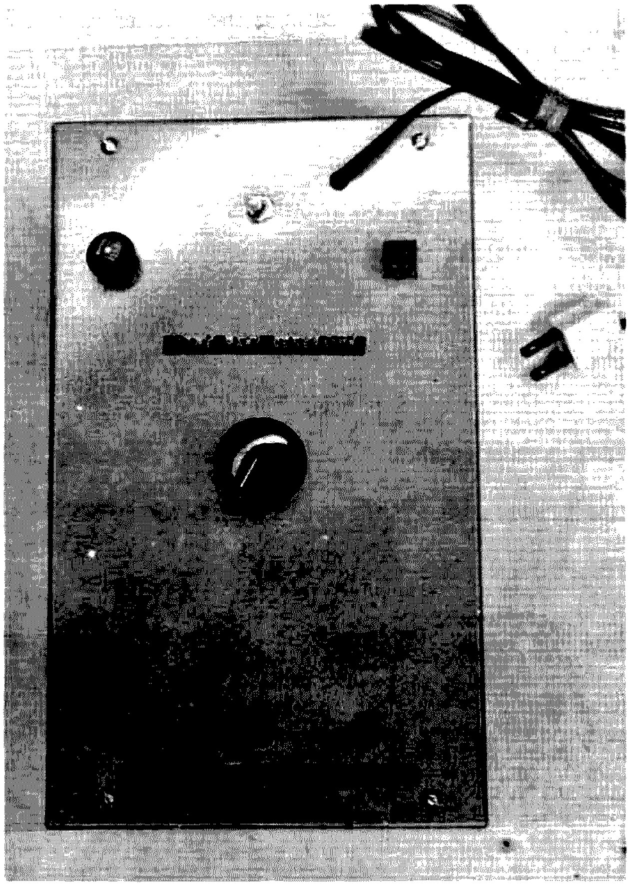

The unit is housed in a 10 x 6 x 3½-inch Bud minibox, CU3010A. The center knob determines which sequence, i.e., 1, 5, or 10 seconds, is heard on the monitor speaker. Outputs on the bottom jacks are simultaneously available. The line fuse, off-on switch, and pilot light can be seen across the top portion of the minibox.

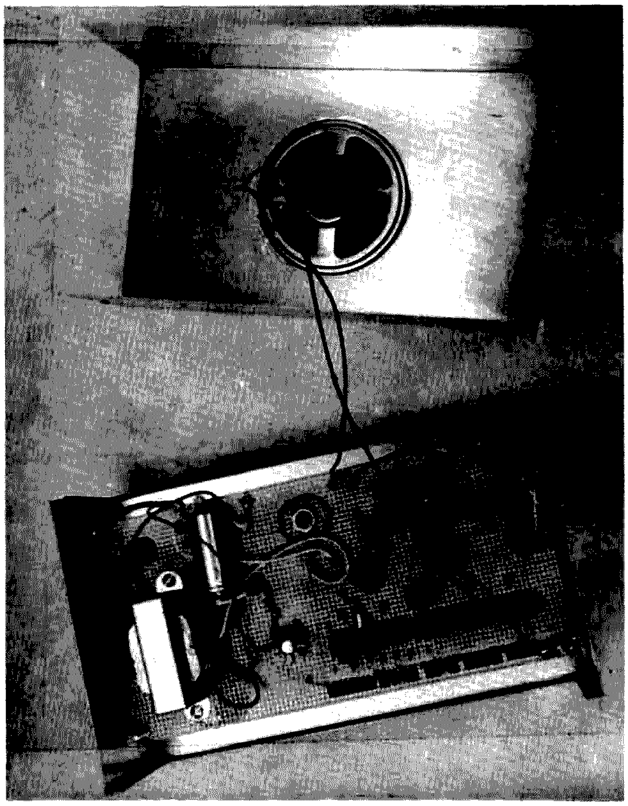

Interior view of the unit, showing the perfboard (.1-inch hole spacing) construction. Sockets were employed for all ICs except the LM309H regulator. The three vertically-mounted (PC board-type) pots on the extreme left end of the perfboard are the output level controls, which can be set to accommodate any high-level audio input, i.e., 100 mV and up. The next three pots to the right are the beep-duration controls. The beep-pitch control is a standard pot, seen near the top center of the perfboard.

Gary McClellan
PO Box 2085
La Habra CA 90631

DMM Buyer's Guide

—expert tells all

Digital multimeters are rapidly increasing in popularity; it seems like everyone wants one. And it's for a good reason. Digital multimeters offer a lot of advantages. They are easy to read, with all data displayed in large and easy-to-read numbers. There's no squinting at a dial, no interpreting scales, and, in short, no guessing at a reading. Digital multimeters offer easier operation, and, in most cases, setting the knobs is easier than with a VOM or VTVM. If you look at quality units, you'll see no zero or Ohms adjust to tweak. Best of all, prices are dropping, and, if you are considering replacing that sick VOM or VTVM, now is the time.

In this article, I am going to show you some of the things to look for in a digital multimeter and, to be perfectly honest, to avoid. I will also define some of the terms you see in ads all of the time. By the end of this article, you should be a lot better prepared to choose a digital multimeter to suit your personal needs.

I am a test equipment designer/head of a growing test equipment company. I work with test equipment every day, and I am fully aware of the features of digital multimeters. So, if my comments help you to make a good digital multimeter choice, so much the better! A wise buy may easily be worth the price of that magazine subscription!

What would an article by Gary McClellan be without a Gary meter? This is the model 101 and it reads ac volts, dc volts, and Ohms.

Do I Really Need a Digital Multimeter?

Surprisingly, you may not want or be able to use a digital multimeter (herein referred to as "DMM"). For example, you may be on a limited budget and can only dream of owning a DMM. I would guess that there are more than a few people who fit into that category. I will caution you that DMMs won't drop in price like calculators will, so don't wait for a $9.95 DMM blister packed on your favorite radio store's wall. Digital multimeters contain precision parts, such as resistors and a precision voltage source. DMMs are also complex and that spells cost. So a $9.95 DMM is a very long way off! I will hazard a guess that DMMs will be selling for about $50 or less within the next 10 years, and I think that's realistic. How would you like to sit around all day and make 0.1% resistors and ICs for literally pennies? Of course you wouldn't.

Another problem is that you could be blind, and it would be tough to read a DMM under these circumstances. But I am sure that there are enterprising radio amateurs who have gotten around this problem. If so, my hat is off to you!

You might stay with a VOM or VTVM if you do little servicing. There's no need to spend $50 and up for a DMM to check your car battery and then work on the transceiver once a year. But many readers have proven to me many times that they really do build things regularly, and that means a DMM will be a powerful asset on the bench or in the shack.

Check Your Requirements

The first thing to do before checking out DMMs is to take a look at your requirements. By that I mean you try to determine what tasks you normally do with a DMM and then ultimately select a unit that does the job at least cost. Only you can do this because your jobs may be different than the next person's. Relax; this should be easy!

Ask yourself, "What do I do with my meters right now?" Say you work on solid state devices. Since you are dealing with low voltage, low-to-moderate impedance circuits, you would want a voltage range to at least 20 volts dc and ac. You would also want resistance ranges of at least 1k to 2k minimum and a maximum range of at least 2 megohms. Most DMMs fulfill these requirements easily, but it pays to check. Optionally, a 0 to 100 mV or 0 to 200 mV full scale dc or ac volts scale would be desirable. Also, dc/ac current of up to several Amps would be nice, but not absolutely necessary. These are the minimum requirements for any DMM you would want to use. You can do without the 100-200 mV scale and current ranges, but get the rest.

But suppose you are working with tubes. The re-

quirements above apply, plus a few new ones. You should get a meter with at least a 0 to 1200 volt dc (and usually 0 to 750 volts rms ac) scale to handle any of the higher voltages you will inevitably encounter. Surprisingly, there are more meters around that have such high scales. I know of several that stop at 200 volts full scale. Avoid these. You will also want a top resistance scale of 20 megohms. This is for measuring those grid leak resistors and for checking leakage in paper capacitors. The vast majority of DMMs on the market have been set up with these extra ranges, so you will have no problems getting a meter.

Now that you have a general idea of what oltage, resistance, and, if esired, current ranges you ant, you should take a look at how you are going o use the DMM. Ask ourself, "Where am I oing to use my DMM?" re you going to use it in he shack or on the bench? hen get an ac-powered ench model. The result ill be a more accurate instrument with no batteries o worry about. In battery-perated DMMs, the acuracy may vary with battery voltage. Also, you may ave no way of knowing if the batteries are weak and the readings you get are wrong. Play it safe and get an ac-powered model for around the house. The slight extra cost is usually offset by better accuracy. Are you going to be orking away from ac power, or do you need a more compact DMM? The attery unit has to be your choice. Note that some models are ac/battery and offer the best of both worlds: battery portability and ac accuracy. This is a fairly popular configuration and you might want to go this routine. But, if you choose battery-only operation, try to get a unit with a low battery indicator to save you the grief of bad readings caused by weak batteries. And always carry a set of spare batteries. By the way, the $169 Fluke model 8020 DMM has a low battery indicator and is one of the few that do.

Now let's look at some of the other features a DMM can have that can be useful. The number of digits is important. Today, you will see 3-digit displays, which are called 1000 count units, 3½-digit displays or 2000 count units, and 4½-digit displays or 20,000 count units. And there are 3¾-digit display meters which may be out by the time you read this, to complicate matters. You can get up to 6 digits if you are willing to pay the price (about $8000!). So which one do you buy? Get the 3½-digit unit if possible. The 3½-digit unit is a very good compromise between cost and performance. I strongly urge you to avoid the 3-digit "toys" on the market. You get more out of the popular 3½-digit unit. Suppose you are reading a 15-volt power supply. The toy will read "15.0" and the 3½-digit unit will read "15.00." Inside the case, the electronics cost about the same, so the 3½-digit display wins hands down. The larger display units are for more accurate measurements, and, unless you are working in a laboratory, you won't need the extra accuracy or want to pay the higher costs. The Data Precision DMM shown is a 4½-digit unit, and sells for around $350.00. So now you know what size display to get.

As for the type of display, you should look for easy reading ½" LEDs, like on the Gary McClellan and Co. model 101 DMM kit, or a liquid crystal display. Avoid gas discharge displays (bright orange) because they are obsolescent and some have problems. My Data Precision is on its third set of gas displays already. A word to the wise: If you are getting a battery DMM, go for a liquid crystal display. The battery life will astound you, as a liquid crystal display draws under several microamps of power. The drawback of liquid crystals is that they don't produce light and they must be illuminated to be read in dimly lit places.

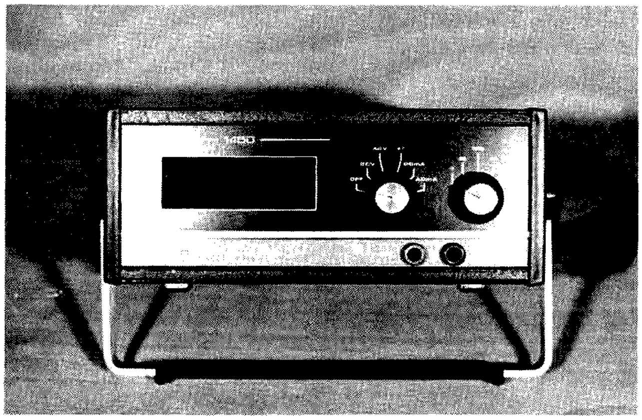

A low-cost 4½-digit lab multimeter. This is a Data Precision model and it offers high accuracy for around $350.00. That's a bargain in 4½-digit meters!

Another area to look over is electrical specifications. But before I get down to specifics, there is one thing you should look for in a DMM and that is overload protection. I can't stress this too highly. This is particularly important if you work with high voltages. A lot of manufacturers of otherwise fine meters hide the fact that their meters aren't overload protected very well. You want a meter that is protected on all scales and functions; if it isn't, you run the risk of damaging your meter every time you measure a voltage higher than the meter is set to or applying a voltage to it while the meter is on a resistance range. Look for overload protection, and, if it isn't mentioned, ask about it. Don't forget about the resistance ranges. They are very hard to protect, and you will pay heavily for a well protected unit. But the cost may be worth it. The model 101 will take up to 1 kV overload on ac/dc volts for very short periods and up to 30 volts on the bottom resistance range for a short period (higher on other ranges). And it is designed so that relatively inexpensive parts fail (5¢ resistors) and can be replaced and put into service without calibration. Overload characteristics are typical for low-cost meters. The cost of better protection is expensive; the cost to protect Ohms better is more than the entire Ohms circuitry cost! So there you are. TV repairmen take note because of the high pulse voltages found in TV sets. One TV test equipment company had to redo its products because they were failing in TV repair applications.

Let's Look At Specifications

If you have done much reading of ads for digital multimeters, you have noticed specifications and terms that are particular to digital multimeters. Let's look at some of these things in order of importance and define them. The

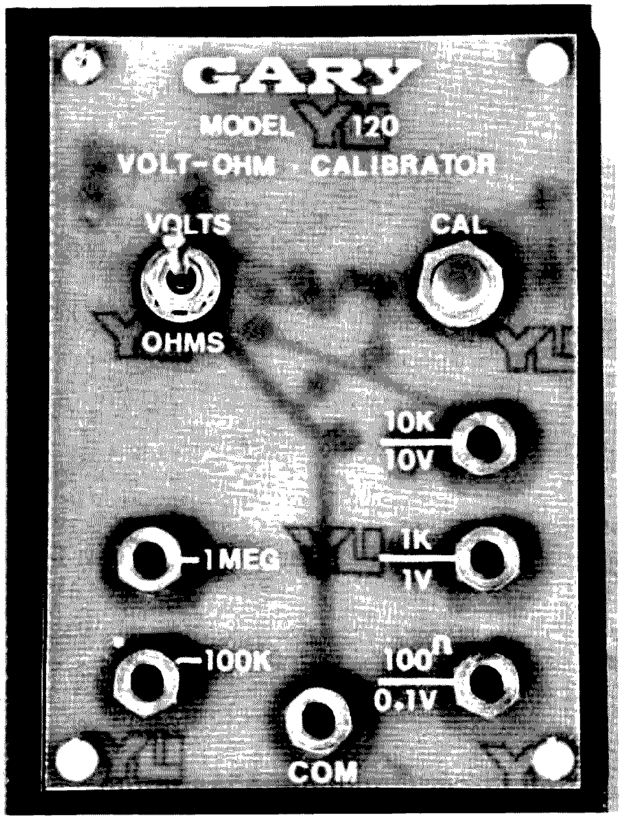

Most kit DMMs have no way of calibration, and the factory may not do calibration. This $34.95 box will calibrate the ranges of most multimeters with little fuss.

first term you will see is something called "basic accuracy." This is the best accuracy spec of the unit and it refers to the dc volts function. Usually, the range switch is set to the lowest range of voltage, so that the meter's voltage attenuator is switched out of circuit. It is important to remember that basic accuracy is the best spec the meter has. Other functions use this dc voltmeter, and their errors add to the basic accuracy. The result is that all other accuracy specs are worse than the basic accuracy. So you want to get a DMM with the best basic accuracy you can. Good ones run about 0.05% to 0.5% and you must avoid units above 0.5%.

Say you are reading 15.00 volts on a 3½-digit meter. The reading can vary from 14.92 to 15.08 volts and be on the edge of the specs. As a result, the farthest digit doesn't mean a great deal—the total change is 0.16 volts. You might as well cover up that last digit with a piece of tape. Don't buy anything above 0.5% basic accuracy; you're wasting money. Besides, the technology for about 0.05% to 0.3% basic accuracy is cheap and readily available; you don't have to put up with less.

Another specification that you should be interested in is the ac accuracy. This spec will always be much greater than the basic accuracy, and a good DMM will have an ac accuracy of 0.3% to 1%. The reason there is more error here is that converting the ac input signal to be measured to dc and then reading out on a dc voltmeter (basic accuracy applies here!) introduces a lot of inaccuracy. If you want very high accuracy, you will pay a bundle for it; good ac accuracy doesn't come easy. Did you know that some 5½-digit DMMs (about $6k to $8k each) have an accuracy of only 0.07% to 0.1%? It's tough for the big guys, too.

As far as you're concerned, 0.5% ac accuracy will be more than sufficient; this level offers a good compromise between price and performance. The problem is that, when you read the ads or data sheet for DMMs, the ac accuracy is nowhere to be found. If that's the case, ask! This spec is important, but, unfortunately, a lot of low-cost DMM manufacturers "hide" their data because they think it will scare off customers. They could be right. I built a DMM kit several years ago that seemed to have terrific accuracy on dc volts and Ohms. But, in the fine print, the ac accuracy was 2%.

You should be concerned about frequency response; specifications for most DMMs are derived using a 60 Hz input. Other frequencies can cause trouble. You should know that virtually all low cost DMMs are low fidelity in their response characteristics. Some are only good to about 1 kHz. Check with the manufacturer if you want more data on frequency response. For the most part, if you do wide-range testing, you'll want to stick with the analog voltmeter. DMMs just don't have wide frequency responses yet, and that includes some very expensive units. Personally, I use our model 101 DMM to measure signals in the 30 Hz to 5 kHz range and then switch to a Hewlett-Packard 400H analog voltmeter to read out to 4 MHz.

The Ohms specification should be of interest to you. Good ohmmeter sections run from 0.05% to about 0.5%, and anything above this is so bad that comment is unnecessary. The high spots of Ohms specifications are the accuracy (easy to get in properly designed units), overload protection, and the number of ranges. As for overload protection, try to get it. One old dodge is to put a separate jack on the meter for Ohms. It works, but a lot of lead switching is necessary. That is the simplest. Instead, get an ohmmeter with at least protection to 12 volts and higher. This isn't great, but it is better than nothing; remember that I said how difficult Ohms are to protect. Better protection is coming someday. As for scales, you want to read down to at least one Ohm accurately, so the lowest scale you get should be R x 2k or so. For the top scale, you want at least R x 2 megs, with R x 20 megs being preferable. This means 5 scales or so of resistance, and you will be able to measure from 1 Ohm to 20 megohms with ease.

The final specifications you should be concerned about are for any current ranges you wish. Most meters offer ac current and dc current, and the accuracies you get are determined by the ac accuracy plus the current shunt resistor tolerance (ac current) or basic accuracy plus current shunt tolerance (dc current). Accuracies of 1% to 2% are typical here, and you can go up to 5% or 10%. The reason accuracy is so terrible is the shunt resistors. To keep costs down, non-precision resistors are often used here. Specifications in this area are usually a disaster, and, in fact, we left out the current functions on the model 101 DMM because of this. Also, the cost of precision resistors is high, a decided

drawback to accurate current measurement at this time. If you really want current ranges on your meter, you'll find them, but beware of any accuracy claims. It's better to save money by using your own external shunts for current measurements.

One more thing while I am on current measurements: Some meters have a two-volt drop to read full scale current (e.g., 200 mA, 2 Amps). This is called insertion loss, and meters with this much drop should be avoided. Here's a true case history. I was checking a TV game which draws 2 Amps at 5 volts. Hooking a commercial 2-volt drop meter in series with the power supply killed everything! There was only about 4 volts on all ICs. If you are ever in this situation, use a higher current range for less voltage rop (I tied a 10-Amp shunt cross the meter), or, better yet, get a meter with only a 200 mV drop on the current ranges. Ask the manufacturer if he doesn't quote insertion loss on his data sheet.

Odds and Ends

By now you should have a good idea of what you want in a DMM and at least be aware of the strengths and weaknesses of most digital multimeters. There are a few other features in digital multimeters that may interest you. The first is autoranging. This feature allows you to read many different voltages/resistances/currents without changing the range switch. This is a real boon if you are working in a tight area and hate to be turning a range switch all the time. Just select the function you want (ac volts, dc volts, Ohms, etc.) and the meter does the rest. You will pay for this feature, but it is often worth the extra cost. Gary McClellan and Co. plans to offer a $100 autoranging DMM, the model 102, and it should be out by the time you read this. However, if you have a certain amount to spend, always spend it on accuracy and not on special features if you can.

There are a lot of optional accessories out for digital multimeters, such as HV probes, rf probes, and thermometers. Check out the Heath catalog or the Fluke catalog for more data.

For a summary of this article, take a look at Table 1, which shows the specs and their limits. ■

1.	Basic accuracy	±0.05% to ±0.5% (Less is better.)
2.	Ac accuracy	0.3% to 1% (Less is better.)
3.	Ohms accuracy	0.1% to 0.5% (Less is better.) See text for overload protection.
4.	Dc current	± 1% to ± 5% (Less is better.) Watch insertion loss (see text).
5.	Ac current	1% to 5% (Less is better.) Watch insertion loss (see text).
6.	Other features	Must have overload protection; ½" LED or LCD displays recommended; Ac operation recommended (see text); 3½-digit display recommended.

Table 1. DMM specifications summary.

Triple Threat

—Microlog's RTTY, Morse, and ASCII system

Ralph E. Delligatti K3CMY
17651 Amity Drive
Gaithersburg MD 20760

After nearly a quarter century of designing, building, using, and troubleshooting communications equipment, it is rare when something new comes along that is exciting. The Morse, RTTY, ASCII keyboard, decoder, and video monitor manufactured by the Microlog Corporation certainly qualify as one of these rare joys!

The Microlog system is composed of three separate and distinct units: the AKB-1 keyboard, the AVR-1 decoder, and the video monitor (VM). These units may be purchased separately or together to form the complete "system," which can be expanded later with options which may be installed either at the factory or by the user/owner.

Living in an apartment or in a town house (as do I) has certain advantages, to be sure, but there are also some distinct disadvantages—such as RTTY operation. The neighbors do not appreciate the clatter—especially in early-morning hours.

Not wanting to give up RTTY, nor to be hanged, not even in effigy, by irate neighbors, I started combing the ad pages of my favorite ham magazines looking for a solid-state replacement for the venerable old "15." Everything to be found, and there isn't what you would call an overwhelming selection, was either too expensive or appeared to be lacking in some refinements. Then it happened! A friend called and asked if I had heard of a company which was new to amateur radio: the Microlog Corporation.

A call to Microlog put me in touch with Bob WA3VPE and Joe N3JL, who, it turned out, are the co-developers of the Microlog units. Immediately arrangements were made to visit their offices and have a closer look.

The Most Enjoyable Test

Several days after the initial telephone call, I was in the engineering offices of Microlog. After a brief introduction to some of the other hams working with the company, I was offered unlimited use of their ham station facilities (N3JL), including a complete Microlog system with most of the options installed. Bob showed me the basics of the rig they use and left me with the equipment and a pair of instruction manuals for the AKB-1 and the AVR-1.

For the next several hours, I was to experience one of the most enjoyable tests I have ever participated in. The first hour or so was spent in both amazement and disbelief as I put the AVR (decoder) through its paces: a five-station pileup on the lower end of twenty CW, numerous RTTY signals on forty and eighty (some so poor to the ear that at times I wasn't even sure that they were RTTY until I switched in the AVR), and still more CW, some of which reminded me of a "left-footed" kid somewhere deep in my past!

I found that the AVR would easily handle just about everything. It gave near perfect copy on a couple of CW and RTTY signals that were barely discernible by ear. Once the AVR locks onto a signal, the speed can increase or decrease by as much as 2:1, and it will follow right along. If the speed slowly increases (or decreases) steadily in one direction only, the AVR will also track right along. Even character spacing can vary, within reasonable

Microlog AKB-1 keyboard. Although there are many options available for the keyboard, only one is visible from the exterior. In the upper row, third key from the right, a special key-cap is installed with the owner's call when the ID option is ordered. All other options are internal.

limits, and copy will be solid. Of course, if a lid is sending CQ with his left foot and chooses to send NN MA as CQ, the AVR will copy *exactly* what is being sent: NN MA!

Cleanliness Is Easy Listening

Those of you who have come away from the rig after a few hours of CW and have felt wiped out could literally see why if you were to look at some of those CW stations you worked on the screen of the Micrology. The AVR displays what it hears. If it hears good clean CW (3:1 dash/dot ratio) with good letter and word spacing, copy is perfect. On the other hand, if it hears junk, it will display junk. Although the AVR is by no means a substitute for a good operator and sound (no pun intended) knowledge of CW, it is certainly a boon to modernizing the amateur station. With its auxiliary TTL terminal on the rear, it is also an excellent training aid for a new operator to use in learning to send good CW with any kind of key. It is an invaluable aid in assisting a "bug" operator with proper setup for a good dot/dash ratio.

Forget The Home Brew

Those of you who follow the many fine articles in *73* and have dabbled in home computers have no doubt seen character generation on a modified production-type television receiver. If you have continued to be captured by that fascinating hobby, you have probably also seen character generation displayed on a commercial-quality video monitor. If you have, you will be able to understand my comparing the converted television's video quality with the quality of a picture produced by a pinhole camera when compared to commercial products. Both are readable, but in terms of extended viewing time, the commercial monitor is by far the better choice and wiser investment.

This companion, which I consider both necessary and a perfect match to the AVR, is the VM video monitor. It is a quality product, produced by a major manufacturer of video devices and, most importantly, it is designed with the requirements of a video character display in mind.

Perfect CW

All of us who have labored through numerous FCC exams, have, at one time or another, been treated to a session of copying "perfect" CW. The CW commonly heard at FCC Field Offices, W1AW, and other locations is often referred to as "machine sent" which is indicative of its precise nature.

The AKB could give any FCC CW machine a run for its money, and keep you on the air without the risk of broken tapes, as W1AW has experienced on occasion. Not only is it capable of perfect CW (weight, ratio, speed, etc.), but it also is just as capable of handling RTTY or ASCII with the same precision.

Although there is not much apparent difference from one keyboard to the next, those of you who have already tried more than one may well know the frustrations of "bouncing" key contacts sending more than the desired number of characters. Some keyboards are *too* sensitive and it's easy to trigger a string of gibberish just by grazing a key with a finger. The performance of the AKB should set aside these fears forever! Some of the other very desirable features included in or available as options on the AKB are: automatic CW identification from the keyboard when in the RTTY mode (operating the control ID command transmits your call in Morse and then resets the AKB automatically for continued RTTY operation); selectable CW speed from the keyboard in one word-per-minute increments from three to ninety-nine words-per-minute; completely keyboard-controlled buffer entry/exit; ID and name/QTH keys, to save repeating these often-used groups; keyboard-controlled character spacing.

No Fun For Knob Twisters

Operationally, this system is no fun for knob twisters! The AVR has only two basic controls, and the function of one of the controls is directly related to the options chosen or added later. The on/off switch is incorporated into the function switch, which, depending on the options chosen, allows you to select CW, RTTY (at all common speeds), or ASCII. The other control is a sim-

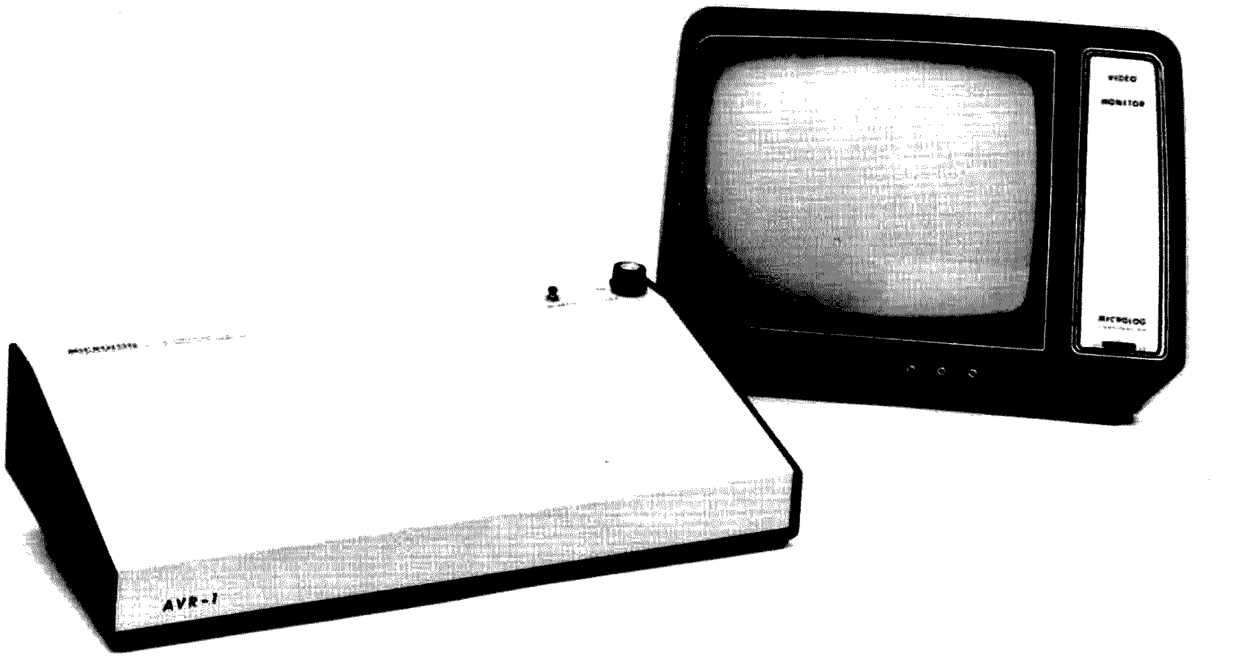

Microlog AVR-1 decoder and VM video monitor. As you can see, the AVR-1 is not much to look at—virtually a box with a knob! However, the size relationship between the AVR-1 and the video monitor provides some visual comparison of the two. The video monitor shown is the 12-inch (diagonal) version.

ple push-button switch which is used to initialize the automatic speed tracking part of the Motorola 6800 microprocessor program which is the heart of the AVR. Initialization merely consists of depressing the button long enough for the AVR to "hear" one CW character composed of at least one dot and one dash. That's all! For RTTY, the calibrate button functions to change speeds. The function switch places the unit in RTTY operation at sixty words per minute, and then each press of the calibrate button steps up the speed (60, 66, 75, and 100 wpm), with automatic rollover from 100 back to sixty. ASCII is selected by the function switch and is fixed at a standard baud rate of 110. When operating HF RTTY, no terminal unit (TU) is necessary as long as the rig you are using has either separate vfos or an RIT control. In fact, the use of a terminal unit will provide a minimal improvement in signal handling of only about 3 dB. Although all standard RTTY functions are present on the keyboard, the AVR has been selectively programmed to ignore certain ones, such as the line feed (LF) function. This conserves space on the video display and makes comprehension of the transmitted copy easier.

What CW Filter?

With the AVR, there is no serious need for any special extra cost filters for your rig. In fact, it doesn't even matter if you have a standard (in most rigs) SSB filter. Some minor improvement may be noticed in performance with the use of a 400- to 500-Hz CW filter. The AVR incorporates its own four-pole filter within its input circuitry. This filter has an effective bandwidth of approximately 100 Hz and is centered at about 750 Hz. The audio input is also protected against accidental overload, with a combination of diode clipping and its own agc circuitry. Additionally, this marvelous little input system utilizes signal regeneration for virtually clean audio at its output, regardless of the crud which may have been riding on the signal coming out of the receiver and into the AVR. For the benefit of those wishing to hear as well as see the incoming signal, the regenerated audio of the AVR is accessible on a rear terminal strip.

Don't Argue With Success

The AKB (keyboard) also utilizes the same "brain" as its companion AVR—the Motorola 6800 microprocessor. Complete control of the operation of the AKB is accomplished via the 6800, which does everything from debouncing the keyboard to providing random code generation for code practice use. It seems that the N3JL/WA3VPE team knew better than to argue with the success of the 6800 in the AVR and wisely incorporated it in the keyboard design as well. A 124-character buffer in the AKB allows full editing capability by means of a backspace command, as well as repeat functions, from one character to a complete sentence of up to 124 characters. In order not to keep anyone dependent on the monitor for following the CW, a sidetone monitor is also built into the keyboard. The keying circuit will handle TTL, cathode (up to 40 V dc at 300 mA), and grid-block (up to −150 V dc at 100 mA)

keying. A mercury keying relay is also available as an option. In the RTTY and ASCII modes, an outboard loop may be keyed.

Beyond the Instruction Manual

Needless to say, that first visit to the Microlog office and manufacturing facility "hooked" me but good—I soon thereafter became a "system" owner. As most hams who have been kicking around the bands for a few years do, I have accumulated my share of equipment, which, for the purposes of this article, proved to be very beneficial. I have operated the AKB-1 and AVR-1 (along with the VM) both separately and together, as appropriate, on the following equipment: an Atlas 210-X/NB; the Drake twins (T-4XB/R-4B); an ancient Hallicrafters S-38C; and a Ten-Tec Argonaut 509. Results with all of this equipment were excellent, even, to my amazement, with the S-38C! On VHF RTTY, a terminal unit is a necessity, and with one of the basic units described in *The New RTTY Handbook*, 73, Inc., 1977, excellent results can be expected. Microlog offers an AFSK modulator which fits nicely into the AKB-1 and is fully compatible with HF or VHF RTTY operation.

During the initial testing at my home QTH, I experienced a fair amount of video "suck-out" on the monitor. After carefully checking all connections and finding the problem still present, I replaced all of the interconnecting wiring with shielded audio cable and found the problem virtually nonexistent. I mention this because the manual does not indicate any specific cabling requirements. Also, with the conversion to shielded cable, I found the terminal strips (standard screw-type) less than ideal for interconnects, and added paralleled phone or phone jacks, as appropriate, to the rear panel of both the AKB and the AVR. Modifications of this type, or any others which do not destroy or cause destruction to the basic circuitry, *do not* void the warranty(ies). This is something which I was very careful to verify with the folks at Microlog before I began. While making these modifications, I noticed the chassis and cabinet of both units are of the heaviest type that I have seen used on amateur equipment in many years.

According to the folks at Microlog, little items which are nice, but which would run up the cost of these units, such as ac power-on indicators, a disable switch for the sidetone oscillator, a remote "calibrate" switch for the AVR, and a remote on-off/function switch, were intentionally left out. They may be added, as well as any other user-desired modification, at no risk to the warranty. Those who have no need for these extras are not burdened by a higher price tag... a nice touch, to say the least. But, remember, the designers are hams, too!

What's That Again?

For the benefit of the technically inclined, or those who are just fascinated by specifications, here's a more matter-of-fact review of the Microlog products (* = optional feature; ** = part of keyboard speed control option; *** = part of RTTY option):

AKB-1 Keyboard

- Motorola 6800 microprocessor controlled;
- Four-contact-per-key, gold-plated contact keyboard;
- Keyboard debounced by the 6800;
- 124-character running buffer with LED status indicator;
- 64-character message memory with up to four addressable sections;
- Keyboard Morse speed control;*
- Variable character spacing;**
- Morse speed range = 3 to 99 words-per-minute;
- Baudot speeds of 60, 66, 75, and 100 words per minute;*
- ASCII operation at 110 baud;*
- RY test generator;***
- Random code generator;*
- ID and name/QTH keys;*
- AFSK modulator;*
- Standard alphanumerics and punctuation in all modes;
- Special function keys for LTRS, FIGS, CR/LF, and LF;***
- Special Morse signal keys standard: $\overline{AR}$, $\overline{AS}$, $\overline{BK}$, $\overline{BT}$, $\overline{KN}$, and $\overline{SK}$;
- Sidetone oscillator;
- Solid-state keying;
- Mercury relay keying.*

AVR-1 Decoder

- Motorola 6800 microprocessor controlled;
- 100-Hz four-pole filter with 750 Hz center frequency;
- Regenerated audio with internal agc and input clipping;
- 12-dB dynamic range with minimum input of .1 V rms;
- RTTY decoded via mark pulse only;*
- ASCII operation at 110 baud;*
- RTTY speed ranges of 60, 66, 75, and 100 words per minute;***
- Video output provides approximately 1,000 characters/full screen;
- CW speed range = approximately 3 to 99 words per minute;
- US standard compatible video output;
- Printer driver output port;*
- Local loop keying output;***
- 1k audio input impedance—will not load speaker line;
- Auxiliary keying input for code practice, etc.

Both units measure 3.7" H x 17.8" W x 9.5" D, and power requirements are 117 V ac at 60 Hz each. The AKB-1 consumes twenty Watts of power while the AVR-1 requires thirty-five Watts.

All three units are shipped well-packed, and, unless otherwise specified, are shipped via United Parcel Service (UPS) throughout the US. In addition, all three units carry a one-year warranty which is *not* voided by user-installed modifications which do not interfere with or damage the basic circuitry.

In checking with the folks at Microlog, I have been informed that the complete system will be on display, for all to see and use, at the Foundation for Amateur Radio Hamfest to be held at Gaithersburg, Maryland, in October. For those who don't want to wait till then, write Charlie Talbot K3ICH, at Microlog Corporation, 4 Professional Drive, Gaithersburg MD 20760, or phone (301)-948-5307. Charlie is in charge of Amateur Sales and Customer Service.

With base prices of $299.00 for the AKB-1 keyboard, $349.00 for the AVR-1 decoder, and $159.00 for the video monitor (VM), you are purchasing a product which is competitive in price and more than competitive in performance with anything currently on the market which has been made available to me for testing. And perhaps the nicest feature is that *you* can add to your system as you desire, and modify it, without risk, at your convenience. ■

The Ultimate T-Hunt

—repeater jammer foiled again

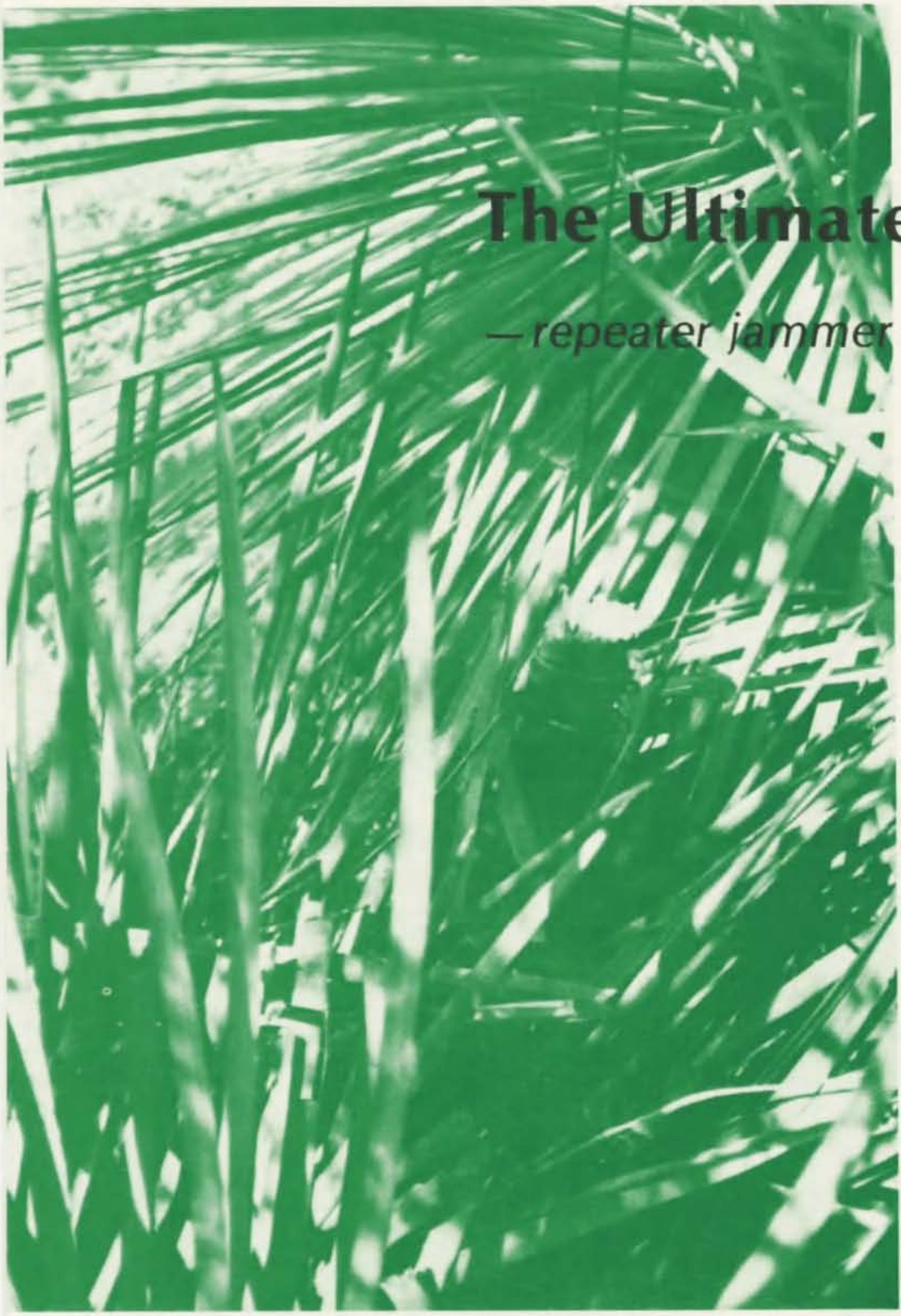

Ground-plane antenna made of coat-hanger wire, pipe clamps, and a broom stick. It is located inside a vicious agave bush.

Bob Thornburg WB6JPI
13135 Ventura Blvd.
Studio City CA 91604

In the midst of getting WR6AMD/WR6ABE back on the air (it was turned off for 60 days to realign the control procedures), a new MCW ID appeared. At over 20 wpm, it sent "JPI SUCKS" through the repeater on a random basis. The signal was strong enough to capture most all users. Since WB6JPI is the licensee of the repeater (WR6AMD), this MCW signal was of primary concern (at least to me).

An initial analysis of the signal showed that it lasted for about 4 seconds on what appeared to be a random basis on the average of 7 times per hour and ran more or less 24 hours per day. The signal first occurred about January 22, 1977.

The jammer committee was involved with a num-

ber of mobile jammers considerably more destructive to the repeater operation than the new MCW signal. But it was of concern. In their spare time, some measurements were attempted, but it could not be heard on the input from the usual base stations. This fact, coupled with the random nature of the signal's occurrence, began to stimulate a challenge. It was not going to be easy.

A concentrated effort by WB6WDV, WA6QZK, WB6JPI, and WA6VSK, with coordination by Paul W6AOP, began to yield some results. It could be heard in parts of Glendale, Pasadena, and Sierra Madre, but very weakly. Bearings seemed to point north from the 210 freeway toward the Angeles National Forest (which Mt. Wilson is in), but it could not be heard elsewhere in the L.A. basin. The Ventura/210/10 freeways had been checked from Ventura to San Bernardino during the course of January 24 through February 2, as well as most of L.A. and Orange counties.

It was Gary WB6WDV who was first to be convinced it was in the mountains. The signal strength was not super strong; some base stations and 3-400 Watt erp mobiles could overcome it. Since even 1/2 Watt on Mt. Wilson was stronger than that, the mountain had been largely discredited as being the host. But Gary was convinced and on February 4 he went up the hill. He obtained strong bearings from near the repeater site pointing ENE and an even stronger signal from Mt. Wilson Road where it overlooked the canyon in back (north) of Mt. Wilson. The MCW transmitter was definitely up there somewhere.

A brief description of this area is that it is rugged. Mt. Wilson is 5,700 feet high and forms the south edge of a large canyon about 20 miles long and some 6-8 miles across. The west fork of the San Gabriel River is created in this canyon. Red Box (4,900 feet) is at the west end and the Angeles Crest Highway runs along the north side at about 5,000 feet. The bottom of the canyon is about 2,700 feet. A dirt road runs down into the canyon from Red Box (Rincon Road) as far as West Fork, then it goes up the south rim of the canyon east of Mt. Wilson.

The terrain is rugged, not only mountainous but full of overgrowth—mostly manzanita, yuccas, and such bushes. It also had up to 2 feet of snow on the north and east slopes.

On Saturday, February 5, Rich WA6VSK, Paul W6AOP, and Bob WB6JPI

Rick Penunuri WA6VSK and Gary Jaegers WB6WDV holding the antenna.

Transmitter and batteries coming out of their burial place.

Rick Penunuri WA6VSK and Gary Jaegers WB6WDV loaded up to pack the box out still operating.

met Gary and his wife Mearl WA6WXI at Mt. Wilson and indeed confirmed the bearings from Mt. Wilson Road. Bearings from the north rim (Angeles Crest Highway) pointed at Mt. Wilson across the canyon. The intersection of the bearings from Mt. Wilson Road and Angeles Crest Highway crossed at about West Fork. Another reading further up Angeles Crest Highway pointed at the observatory on Mt. Wilson and did not correlate at all with the previous reading.

Meanwhile, Leonard WB6QZK drove up Highway 39 to Crystal Lake and reported no signal. Gary took his antique Monza down the Rincon to West Fork (or what he thought was West Fork) but could hear it only at high spots with no consistent bearings. Rich and Jippy (short for JPI) went along various points from Red Box to Barley Flats on Angeles Crest Highway, always getting bearings pointing at the observatory. The area in Mt. Wilson Park also showed very weak signals.

On Sunday, February 6, it was arranged to gain access to the observatory area. A strong bearing from the cliff was obtained to the NE across the canyon, indicating that the bearings from Angeles Crest pointing toward Mt. Wilson must be reflections.

Rick and Jippy drove around to Shortcut Road and hiked down into the canyon (about 8 miles), while Gary once again drove the Rincon, this time getting to West Fork and up the south side to where Shortcut Road met Rincon (at 4,400 feet—Shortcut Road started at 4,900, dropped to 2,700, and went back up). Much pooped and it being almost dark, Rick and Jippy arrived at the river after obtaining almost no bearings except NE. Rather than climb up to either end, they left the road and headed cross country, following the river to West Fork. Gary met them there and reported that he had no new bearings other than northeast. We concluded it was not on Mt. Wilson nor on the bottom of the canyon.

During the following week, Gary made several trips into the mountains with the first new data coming from Windy Gap on Angeles Crest Highway. This bearing pointed south, which crossed the Wilson Road bearings just north of Cogswell Reservoir. He also drove the Rincon-Red Box road again, this time getting as far as Monrovia Peak before ice on the road halted the progress of his antique Monza. The bearing from this point was a little west of north. Gary and Leonard then approached the road from the east end, climbing to the top of Pine Mountain in Leonard's 4-wheel-drive Blazer. Gary relaxed and enjoyed the view into the canyons below, knowing that this time he was traveling the steep, narrow dirt roads in an appropriate vehicle in expert hands. Then Leonard remarked that this was the first time he had driven his Blazer on anything but flat ground. Gary closed his eyes and hid under the dashboard.

The bearings from Pine Mountain were WNW, crossing the other bearings in the area between Windy Gap and Cogswell Reservoir. A weak WSW reading from Twin Peaks Point on Highway 39 was obtained as a final check. Good bearings from all directions indicated that the transmitter was in the area of Bobcat, Lobo, or perhaps Devil's Canyon.

On Friday, February 11, Gary hiked along the ridge on the east side of Bobcat Canyon (runs southwest from Windy Gap) and obtained very strong bearings that indicated that the transmitter was in Bobcat Canyon.

Saturday, February 12, Rick, Jippy, Gary, and Mearl went along the ridge once again confirming Gary's readings. A cross was indicated just below a 200-foot hill and on down into Bobcat Canyon. Although the team had originally decided to just confirm the bearings from the ridges on Saturday and go in on Sunday, it looked so good that it was decided to venture forth.

There is no trail or road or anything along the ridge. At the point of leaving the ridge, the team had traversed about 2 miles, dodging bushes and the deadly agave (yucca). Rick had a bloody ankle from one of these vicious killers. The ridge had dropped about 800 feet from the road. Leaving the ridge was no mean feat, as the undergrowth now became dense and was coupled with a steep slope. You could stand still on this slope, but only after coming to a stop against something (hopefully, not one of those deadly yuccas).

This area is lovingly known as the San Gabriel Wilderness Area. It is protected and controlled by the National Forest Service. We had obtained special permits to allow us to enter the area. The interest shown by the Forest Service and the California Highway Patrol with our problem (we were stopped several times with our weird DF equipment and strange behavior) is to be commended, although we are sure they think we're nuts. Back to Bobcat Canyon.

We knew we were very close to the transmitter as we progressed (slid) down from the ridge. The signal was extremely strong on our DF equipment. In fact, it was so strong that the

modulation was apparently coming from a different direction (2-3°) from the carrier. This is a quirk of the L-PER receiver for very strong signals. (Remember, it is an AM receiver and has no limiting.) After about 300 yards of downsliding, we stopped (with some difficulty) with Jippy about 20 feet uphill from Rick and waited for it to come on again.

For those who have been on T-hunts, the convenience of a continuous transmitter must be appreciated. You can take bearings whenever it is convenient. This transmitter was not so obliging. Being random, it only came on when it felt like it. We waited. Since it was only on for a few seconds when it did come on, we waited with DF equipment on and ready. We waited. Often the wait was 10 or more minutes, with the record being 35 minutes.

Balanced on the slope of the canyon wall, we waited for about 5 minutes. It came on, finally. Jippy pointed with his finger outstretched to Rick to look about 10 feet to his right. We all scrambled around looking in bushes without much success, missing the next transmission due to keeping balance, etc. Finally, in an attempt to become organized, Rick climbed back up to Jippy's level and we waited. While waiting, Rick found it. "I found it!" rang out for all in Bobcat Caynon to hear. A coyote ran out of the bushes, scared by the noise.

With much yelling and a little help from .52, Gary and Mearl, who were 100 yards up the hill, slid down and we all stared at Rick's discovery. It was a ground-plane antenna, handmade from coat-hanger wire and a PL-259 connector, located well inside a menacing yucca bush. It was well enough hidden that Jippy's outstretched finger 1/2 hour before was about one foot away and pointing right at it. Poor blind Jippy.

But no transmitter. We old experienced T-hunters have a saying: "Where there is a radiating antenna, there must be a transmitter." Following the RG-58 coax from the antenna (it was buried in the ground), we found the transmitter about 3 feet away, also buried in the ground. In fact, it was buried directly under where poor blind Jippy was standing for the now famous finger-stretching exercise.

The transmitter was carefully dug out, using gloves to ensure that all fingerprints were not ours. The transmitter was contained in a parts bin, about 15" x 8" x 6", sealed up with a fiberglass cover and RTV. Alongside were found two batteries of the type used in lanterns or electric fences.

Now, someone went to a lot of trouble to put this thing here. It was Saturday afternoon (2 pm), and if it went off the air now, it would be apparent to the installer that it had been found. But, if it went off at midnight on Monday, it would be apparent that it died on its own, since no one would be wandering around in this desolate area at midnight on Monday. So, rather than give the originator the satisfaction of knowing why it went off, it was decided to pack the unit out, still operating, and keep it running until Monday midnight. We also considered disabling the transmitter and leaving it there to see if anyone came to fix it, but decided that we didn't want to stake it out. Besides, the originator must have "written it off" when it was planted and probably wouldn't come back anyway.

So the unit was loaded into Gary's pack, fully operational with the antenna sticking out the top, and up the hill we went. It was loaded (still running) into Rick's car and driven out of the mountains and carefully installed in Rick's bedroom in Burbank. During all this moving around, the signal strength into the repeater varied, but from Burbank it was only a little weaker than in the canyon. No one seemed to notice. At midnight Monday, Rick cut the battery wires and it was forever silent.

Later in the week, the transmitter box and batteries were run through a local police department SID for fingerprints and other identifying characteristics. This was the first time we saw the inside of the box. The digital portion was assembled on a perfboard using wire-wrap and IC sockets for the 17 CMOS ICs and 7 transistors. The transmitter was an exciter board from a Heathkit HW-101 with an output of about a Watt.

What kind of person would go to the trouble of building such a complex device and truck it into the boonies just to tantalize the repeater? Note that although the jammer was annoying (especially to JPI), it really didn't interfere significantly with the repeater operations. It was illegal in being unlicensed, not identifying itself, being located in Forestry land without a Forestry permit, and the installer entered the Wilderness Area without a permit (we checked). It could not be considered malicious in the FCC sense. The conclusion one comes to is that it was a game—a challenge to those who find jammers, a protest against repeaters, a gauntlet thrown in JPI's face. From the jammer's point of view, winning would be to cause the most disturbance (as is usually the case for any jammer). The users of WR6AMD were very good about not discussing the jamming on the air (although off the air, JPI sure heard about it), so no satisfaction was awarded by the users.

The T-hunt activities described above were not made public until several weeks after the transmitter was disabled, so the jammer did not gain satisfaction from witnessing that activity. So, other than this article, what did he gain? Nothing. If one were to score the game, it might go as shown in Table 1.

Even deducting 50% of the hunters' labor for the obvious benefits of camaraderie, fresh air, and exercise, the jammer has won, except for one thing—we know the identity of the jammer. ■

Jammer:				
Material				$ 85
Gas				5
Design/Assemble/Test Logic	75 hrs			
Assemble Transmitter	4			
Package & Test	12			
Install	6			
Total Hours	97 hrs.	@	$5/hr	485
			Jammer Total:	$ 575
Hunters:				
Gas				$ 85
Labor	275 hrs.	@	$5/hr	1,375
			Hunter Total:	$1,460

Table 1.

Alex F. Burr K5XY
2025 O'Donnell
Las Cruces NM 88001

Two Meter HT Survey

—data on 21 rigs

One of the most exciting things about the proliferation of two meter repeaters is the resulting wide-area coverage possible with exceedingly compact transceivers. Without repeaters, two meter hand-held transceivers, or HTs, would be mostly toys. With repeaters, they are the traveling ham's pride and joy. Usually less than two pounds in weight and compact enough to put into a briefcase, they can easily be carried everywhere. And they are *complete*—power supply, microphone, and antenna—everything is there except for the logbook, and the FCC has simplified logging, too. To be able to travel the countryside with a complete ham station and comfortably talk to the local hams greatly increases the enjoyment one can get from this hobby. Local hams find it very convenient to keep in touch with these marvels of compactness, too.

The IC-215 by Icom.

This article is designed to summarize some of the more important characteristics of most of the hand-held two meter units that are commonly available. These characteristics are collected in Table 1. The information has been collected from advertisements, contacts with the manufacturers, and from the units, but one must remember that specifications change and that definitions often differ from manufacturer to manufacturer, so this table should be used to familiarize yourself with the range of possibilities available and to select those products which you would like to investigate further for your particular use.

Here is a detailed explanation of what each column in Table 1 represents.

Col. 1: Lists a number which refers to the name and address of the manufacturer (see Table 2) and gives the model number of the HT.

Col. 2: Lists the power output of the unit in Watts. If a low-power position is available, the lower power is given after the /.

Col. 3: Lists the receiver sensitivity in microvolts for 20 dB quieting.

Col. 4: Lists the number of channels available. The number of channels supplied with the basic unit is given in parentheses.

Col. 5: Tells whether or not the unit comes with a meter and, if so, what the meter measures. S means received signal strength, B means battery voltage, and O means relative power output.

Col. 6: Lists the current drain with the receiver squelched.

Col. 7: Lists the current drain when transmitting in the high-power position.

Col. 8: Tells whether (Y) or not (N) the unit contains a microphone separate from the speaker.

Col. 9: Tells what kind of external antenna connector is in the unit. PP means phone plug socket.

Col. 10: Gives the number and type of batteries used. Most use the AA size. The number 8/10 means that the manufacturer recommends that 8 zinc-carbon cells or 10 nicad cells be used. Sp means that a special nicad

	Equipment	Power	Microvolts	Channels	Meter	Sq. Drain mA	Xmit Drain mA	Sep. Mike	Ant. Conn.	Battery	Weight (oz)	Volume (in.^{3})	Price
1	CR V026	3	0.45	6	no				BNC	8AA	36	27	w[5]
2	TR-33C	1.5	0.5	12(2)[1,2]	S-B-O	30	400	Y	UHF	10AA	70	131	230w
3	HW-2021	1	0.75	5[1,3](1)	no	35	>500	Y	PP	10AA	32	56	170w K
4	3806	1	0.5	6(1)	S-B	20	380	Y	BNC	8AA(Sp)	35	54	190
5	GTX-1	3.5/1	0.35	6	no	35	650	N	BNC	8AA	36	27	250
5	GTX-4	1.5		4(1)	no			Y			30	28	200w
6	IC-215	3/0.4		15	S	40	750	Y	UHF	9x	67	110	230
7	TR 2200A	2/0.4	0.4	12(6)	S-B	45	700	Y	No	10AA	56	91	250w
8	HRT-2	2/1	0.7	5(1)	no	30	600	Y	PP	Sp		63	180
9	SRC-146A	2	0.4	5(2)	S-B	15	620	Y	PP	8 10AA	32	44	300
9	C-118	1	0.4	6(1)[1,2]	no	25	300	Y	BNC	Sp	21	27	240w
10	FMH-2	2/1	0.5	6(1)	S-B	20	500	Y	BNC	8 10AA	28	57	220
10	FMH-5	5/1	0.5	6(1)	S-B	20	1000	Y	BNC	8 10AA	28	57	280
11	HT144B	2	0.35	4(1)	no	10	500	N	None	10AA(Sp)	22	35	130K
12	1402SM	2.5	0.3	6(1)	S-B	25	500	Y	TNC	10AA	27	48	255
12	1405SM	5/1	0.3	6(1)	B	25	900	Y	TNC	10AA	28	45	330
12	WE-800	1/12[6]	0.3	all[4]	S-O	45	290	N	BNC, UHF	10AA	59	104	500
12	Mark II	2.5	0.3	6(1)	no	15	500	N	BNC	nicad(Sp)	19	26	230
12	Mark IV	4	0.3	6(1)	no	15	900	N	BNC	nicad(Sp)	19	26	260
12	1407SM	7/1	0.3	6(1)	B	15	1200		TNC	nicad(Sp)	28	45	385
13	Mini-1	1.8	0.3	6(2)[1,2]	no	20	330	Y	BNC	10N	18	23	240w

Table 1. Two meter HT survey. 1Only one crystal per channel needed; 2three offsets supplied; 3two offsets supplied; 4synthesized four offsets available; 5not sold in U.S.A.; 6external power needed for high power out.

battery pack is required or is available.

Col. 11: Gives the weight in ounces of the unit with batteries.

Col. 12: Gives the volume occupied by the unit in cubic inches.

Col. 13: Lists a usual price. A w means that the price includes nicad batteries. K means that the unit is a kit.

If no entry appears in any column, it means that the manufacturer does not establish a value for that quantity or that information was not available when the table was

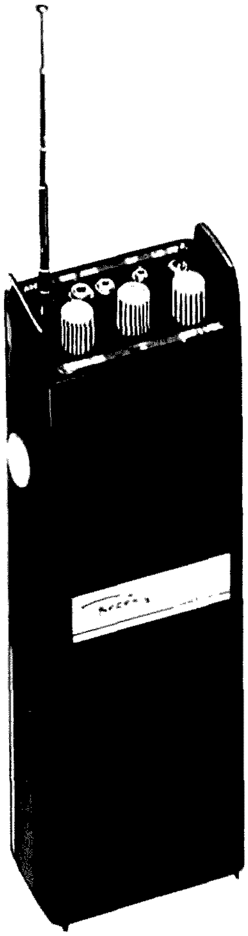

The HRT-2 by Regency.

The HW-2021 by Heathkit.

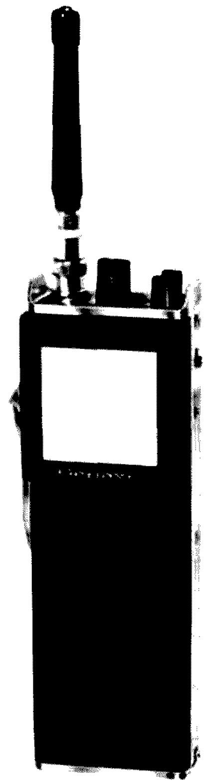

The GTX-1 by Genave.

prepared.

There is a lot of information in the main table; however, there is also a lot of important information which cannot be given in any table. Quality of construction is one type of information which is impossible to objectively present. The completeness of instruction manuals and the availability of service have not been considered. Neither have the terms of any warranty or the reputation of the maker.

The most important feature which is not included here is receiver selectivity. There are many different ways to report receiver selectivity, most of which are difficult to compare. If most of the time the equipment will be used in an area full of repeaters, the receiver selectivity will be a very important consideration.

There is not much you can do about the number of channels. Any number you get will be too small when you travel and too large when you have to buy crystals (except for the WE-800).

A meter is not essential, but it is very useful, especially when you are on the fringe of a repeater and are walking around your room looking for a hot spot.

The importance of current drain is quite dependent on your operating habits and the distance to recharging facilities. Most batteries used in these units will supply about 500 milliamp-hours of energy. If you intend to use the unit away from the power line for long periods of time, current drain will be particularly important.

Not many people worry about the weight of these light units, but the size might be important for you, especially if you want to get something else in that briefcase, too.

Price, of course, is quite a variable. Sometimes you will find some of the units on sale. Nicad cells can be expensive, so, if they are included in the price, that is an important consideration.

The most important accessories used with HTs include a rubber ducky, a short, flexible antenna; a built-in touchtone™ pad for autopatch use; and, for the fellow who must have all frequencies, special miniature synthesizers. External microphone, speaker, and power supply connections are useful features that not all of the HTs possess.

Of course, this segment of the two meter FM market is always changing, and new products are coming in faster than old products are disappearing. But the tables presented here should give you a good idea of the variety of equipment presently for sale and give you some idea of the state of the HT art with which to compare any new equipment that you run across.■

1. CR Electronics
   1155 Triton Dr., Suite D
   Foster City, California 94404
   (415)-574-3571

2. R.L. Drake Co.
   540 Richard St.
   Miamisburg, Ohio 45342
   (513)-866-2421

3. Heath Company
   Benton Harbor, Michigan 49022
   (616)-982-3411

4. Hy-Gain Electronics Corp.
   8601 Northeast Highway Six
   Lincoln, Nebraska 68505
   (402)-464-9151

5. Genave
   4141 Kingman Drive
   Indianapolis, Indiana 46226
   (317)-546-1111

6. ICOM West, Inc.
   13256 Northrup Way
   Bellevue, Washington 98005
   (206)-747-9029

7. Trio-Kenwood Communications, Inc.
   116 East Alondra
   Gardena, California 90248
   (213)-770-4350

8. Regency Electronics, Inc.
   7707 Records St.
   Indianapolis, Indiana 46226
   (317)-545-4281

9. Standard Communications Corp.
   Box 92151
   Los Angeles, California 90009
   (213)-532-5300

10. Henry Radio
    11240 W. Olympic Blvd.
    Los Angeles, California 90064
    (213)-477-6701

11. VHF Engineering
    320 Water St.
    Binghamton, New York 13901
    (607)-723-9574

12. Wilson Electronics Corp.
    4285 S. Polaris
    Las Vegas, Nevada 89103
    (702)-739-1931

13. Palomar Electronics
    665 Opper Street
    Escondido, California 92025
    (714)-746-2666

Table 2. Addresses of manufacturers.

Interrupts Made Easy

—for 8080/S-100 users

Jim Marr WB6LOA
1837 Midwick Dr.
Altadena CA 91001

When my Intel 8080-based S-100 bus system was finally up and running, I began looking around for ways to increase its flexibility. The first thing I needed was a means of getting out of a program that was running and back into the monitor without using front panel switches. Interrupt capability was clearly needed. Unfortunately, parts of my software resided in the section of memory that the 8080 uses for its restart instructions, so I couldn't use an interrupt controller such as Intel's 8214.

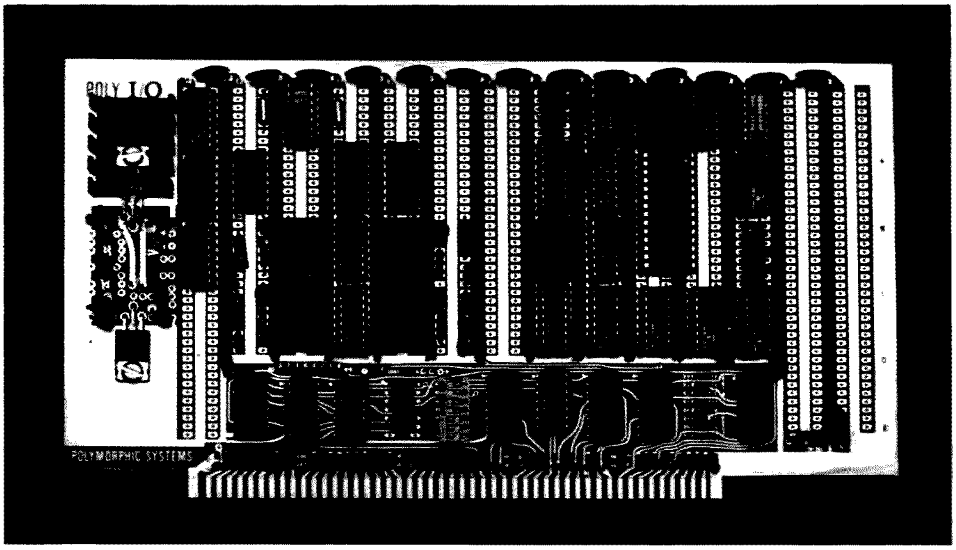

My 8259 interrupt controller is assembled on a PolyMorphic I/O board; however, none of the address decoding circuitry provided on that board was utilized. The interrupt controller is the large block of chips on the right side of the board. The 8259 is the large chip in the center of the block. (Photo by Mark Friedman.)

After a few minutes of thumbing through data sheet catalogs, I discovered the solution to my problem – Intel's 8259 programmable interrupt controller. The 8259 uses a call instruction instead of a restart instruction, which allows the interrupt-handling routines to be located anywhere in memory. As an extra bonus, the 8259 also allows interrupt priorities to be changed or individual interrupt lines to be disabled at any time during processor operation.

In this article, I will describe how interrupts work in an 8080-based system, the 8259 chip, how to interconnect the 8259 to the S-100 bus, and a simple software routine to get the 8259 working.

Interrupts and the 8080

Basically, an interrupt is a request by a peripheral device for immediate service by the central processor. In an 8080-based system, the sequence of events following an interrupt is as shown in Fig. 1. You must first assume that the processor is busy executing some program, which I have called "Main," for lack of a better name. When our external device decides that it needs to be serviced, it pulls the INT (interrupt) line (pin 14) on the 8080 chip high, providing an interrupt request to the 8080. The 8080 ignores this line until it has completed the current instruction cycle.

For those unfamiliar with the 8080, an instruction cycle consists of everything the 8080 must do to get and to

process a single instruction. Each instruction cycle is subdivided into smaller parts called machine cycles. The first machine cycle in any instruction cycle is the instruction fetch, or M1, cycle. Whether or not any more machine cycles are required depends on the type of instruction the 8080 obtained while in the M1 machine cycle. Many 8080 instructions do not require more than one machine cycle, while some require up to five.

After the current instruction cycle is completed, the INT line is examined. If it is high, the 8080 also looks at its internal interrupts enabled (EI) flip-flop. This flip-flop is software controllable, using the EI (enable interrupts) and DI (disable interrupts) instructions, and must be set before interrupts will be ccepted by the 8080. If the EI flip-flop is not set, the 8080 ignores the interrupt request on its INT line and continues running the proram Main. If the EI flip-flop is set, the 8080 sets its internal interrupt flip-flop, esets the EI flip-flop (disabling any further interupts), and begins an interupt-instruction cycle.

The 8080 tells the outside orld what type of machine ycle it is entering by placing ight status bits onto the data us at the beginning of each achine cycle. The first achine cycle in the interupt-instruction cycle is ndicated by having status its M1 (instruction fetch), $\overline{WO}$ (processor write, active ow), and INTA (interrupt cknowledge) high and all others low. These bits are latched into an eight-bit regster by the SYNC pulse sent out by the 8080 on pin 19 hen the status bits are stable n the 8080 data bus. The status bits can then be used o control circuitry external o the 8080 (as I will do later).

During a normal instrucion fetch, the 8080 would increment its program counter register at this time. Following the interrupt, however, the program counter register is not incremented. This allows you to keep track of the address of the next instruction to be executed in program Main so that you can continue execution after the interrupt is processed.

Next, the 8080 resets its internal interrupt flip-flop and inputs an instruction from the data bus. It is assumed that the interrupting device has placed an instruction on the data bus for the 8080 to get. The external circuitry associated with the device-requesting service has the responsibility to see that the right instruction is placed on the data bus at the right time.

The type of instruction that the 8080 receives from the data bus determines what happens next. If the instruction is not one of the 8080's restart instructions or a call instruction, it is simply executed, and the program Main then continues where it left off. This feature is useful if it is desired to increment or decrement one of the 8080's internal registers in response to some outside trigger while a program is running (for example, a counter). There are probably lots of clever ways to use this feature of the 8080 that have not yet been tried.

If the 8080 gets a call instruction, then it fetches two more bytes which are the address of the routine being called. This is normally the address of the service routine for the interrupt. It may not be immediately apparent, but a lot has to take place in the circuitry external to the 8080 for this to occur. That's what the 8259 is for.

If, instead, the 8080 gets a restart instruction, the address of the service routine is automatically set by a three-bit pattern imbedded in the single-byte restart instruction itself. Obviously, only eight such three-bit patterns exist, so you only have eight places in memory to locate your service routines. These start at address 0000 hex and are spaced every eight bytes in memory. These addresses correspond, in order, to the restart instructions RST0 through RST7.

Regardless of whether the instruction was a call or a restart, the 8080 now pushes (stores) the current program counter register contents onto its stack (the area of memory devoted to keeping addresses for future use) so that it will be available after completion of the interrupt service routine. This is necessary because the program counter register contains the address of the next instruction to be executed in program Main. The appropriate address from the call instruc-

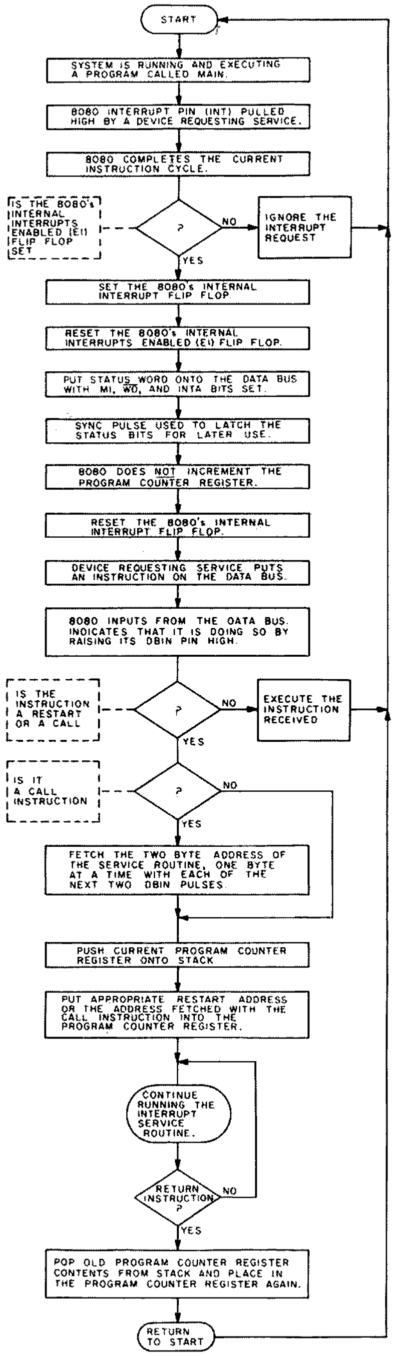

Fig. 1. Flowchart of the event sequence for interrupts in an 8080-based system.

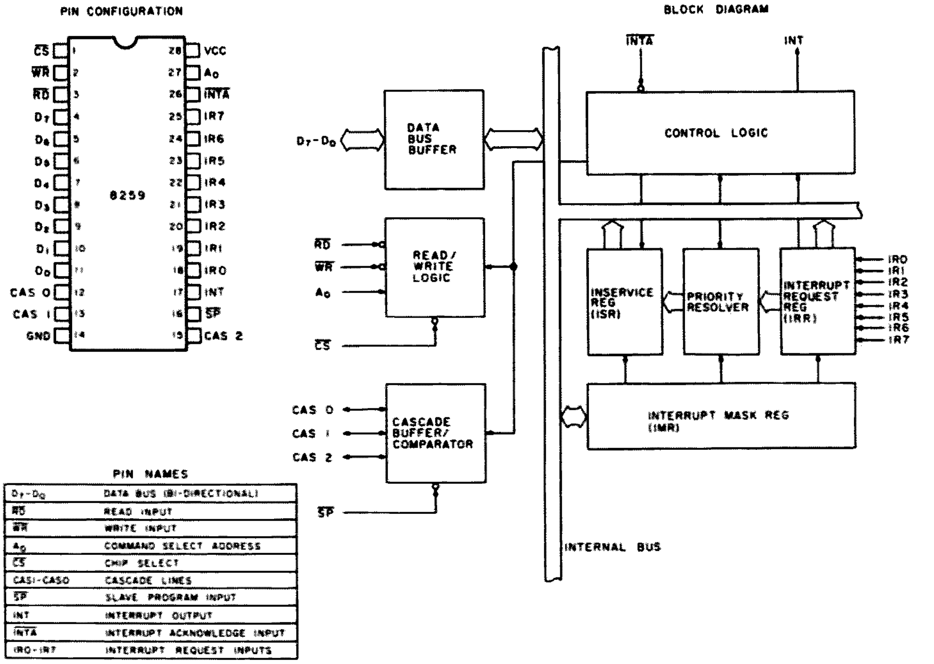

Fig. 2. Pinout and block diagram of Intel's 8259 programmable interrupt controller. (Courtesy of Intel.)

tion or restart instruction is then placed in the program counter register, and the 8080 continues executing instructions, only now it is in the interrupt service routine instead of the program Main.

When (if ever) a return instruction is encountered by the 8080, the old program counter register contents (address of the next instruction in the program Main) that was pushed onto the stack earlier is popped (removed) from the stack and placed in the program counter again. The program Main now continues executing at the instruction that would have been executed next if the interrupt had not come along, just as if nothing at all had happened.

This is more or less how the 8080 was designed to handle interrupts. Normally, you will use more than one interrupt request line in a system to allow several devices to be serviced as they require. The request lines are usually arranged in some order of priority, with the most important devices taking precedence over less important devices.

All of this is intended as a review if you are already familiar with how the 8080 handles interrupts, or as a brief introduction if you are encountering this for the first time.

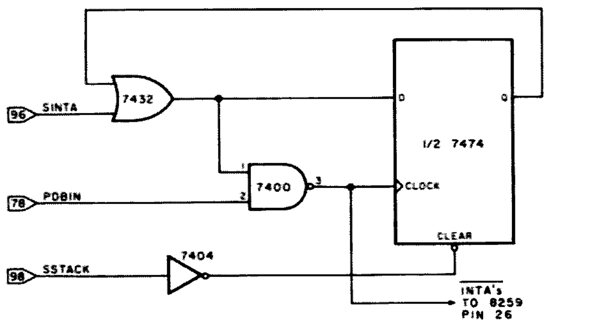

Fig. 3. $\overline{INTA}$ pulse generator circuit. (Bus pin numbers are those of the S-100 bus.)

The 8259

The 8259 gets around most of the limitations that the 8080 has in handling interrupts. Fig. 2 is a block diagram of the 8259. The chip has its own internal bidirectional data bus and is interfaced to the 8080 data bus through the eight-bit bidirectional data-bus buffer.

The interrupt-request register (IRR) is basically an 8-bit positive edge-triggered latch that holds a record of those devices that have requested service. The "positive edge-triggered" business means that, when the interrupt-request (IR) pulse is making the transition from low to high, the flip-flop is set.

The priority resolver determines which (if any) of the interrupts will be serviced next and then sets the appropriate bit in the in-service register (ISR). The in-service register then determines which address is to be placed on the data bus in response to the $\overline{INTA}$ pulses from the 8080.

Individual interrupt-request lines may be masked off, which simply means that they can be inactivated, by setting the appropriate bit in the interrupt-mask register (IMR).

The control logic block takes care of synchronizing the various internal parts of the chip. Its primary duty is to issue an interrupt to the 8080 in response to a valid interrupt request at one of the 8259's eight interrupt-request lines and then gate the three bytes of the call instruction onto the 8080's data bus in response to the three $\overline{INTA}$ pulses from the 8080 support circuitry.

Programming and reading the status of various registers in the chip are handled by the 8080's I/O (input/output) instructions and the read/write logic block of the 8259. The chip requires two I/O port addresses for proper operation.

More than one 8259 can be tied together through the use of the cascade buffer/comparator. One 8259 is designated as the master, and all other 8259s in the system are designated as slaves to the master. The slave's INT line is connected to one of the master's interrupt-request lines so that, when the slave chip gets an interrupt request on one of its interrupt-request lines, it sets the master 8259's interrupt-request register flip-flop. The master 8259 then issues an interrupt request to the 8080 on its INT line. An 8259 chip is designated as a master by tying its slave program ($\overline{SP}$) pin high or as a slave by tying the $\overline{SP}$ pin to ground. Up to eight slave 8259s may be used with a single master.

When a slave 8259 receives an interrupt request, the slave outputs a high on its INT pin which is connected to one of the master 8259's interrupt-request (IR) pins. If that IR pin is not masked off by the master 8259's interrupt-mask register (explained later), the master 8259 issues an INT to the 8080. When the 8080 acknowledges with the first of the three required $\overline{INTA}$s, the master 8259 puts the call

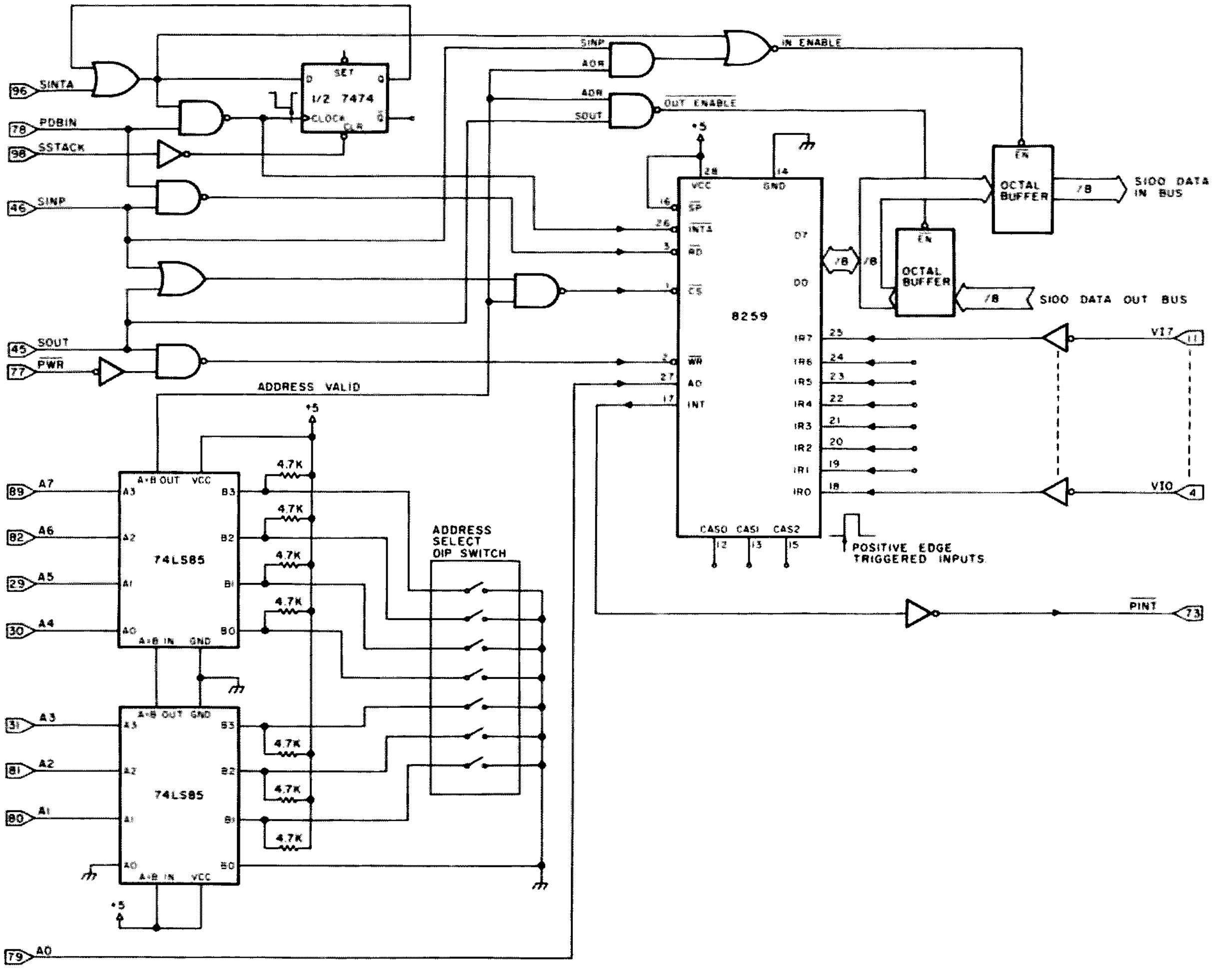

Fig. 4. Logic diagram of the 8259 implementation in S-100 bus systems.

instruction onto the data bus. The master also puts the address (one of eight) of the slave 8259, the one which received the interrupt request from the device needing service, onto the cascade buffer/comparator output lines, CAS0 through CAS2. This address (connected to the slave's cascade buffer/comparator lines) enables the slave 8259 to put the required service routine address onto the 8080 data bus with the next two $\overline{\text{INTA}}$s from the 8080.

Clearly, since a call instruction is used instead of a restart instruction, the service routine may be located nearly anywhere in the 64K of memory available to the processor. The master/slave feature allows as many as 64 interrupt-request lines to be serviced by 64 different routines, if desired.

The interrupt-mask register (IMR) allows for maskable interrupts. Again, this means that the user can disable any or all of the interrupt-request lines to any 8259 chip. To accomplish this, you set the desired bit(s) in the interrupt-mask register. You thus have the option of turning off any particular interrupt(s) without turning them all off.

The priority resolver allows the user to change the priority of any interrupt-request line at any time during system operation. Suppose, for instance, that, after servicing a particular device, you wish to assign it to the lowest priority, giving the remaining devices in the system a higher priority. This is easily accomplished with a single command to the 8259, which reprograms the priority resolver to do what you want.

By this time, you must already realize just how versatile the 8259 is. The chip has exactly the kind of flexibility that I needed to solve my interrupt problems. The next step was to get the chip operating in the S-100 bus environment.

Interfacing to the S-100 Bus

This section deals specifically with the S-100 bus standardized by the Altair 8800. If you are not familiar with this bus structure and wish to know more about it, you might refer to the article, "Introducing the S-100: Standard Small Computer Bus Structure," by W. M. Goble, which appeared in the June, 1977, issue of *Interface Age* magazine.

All of the interfacing is fairly straightforward, except for one small part. Intel designed the 8259 to work in a system that employs the 8228 system controller and bus driver chip. For those not familiar with this chip, it is basically a status bit latch and bidirectional data-bus driver all in one chip. It also has another unique function. When a call instruction is issued in response to an INTA status bit, the 8228 issues three INTA pulses, one during each of the next three machine cycles, so that the 8080 will get all three bytes of the call instruction. Since S-100-based systems do not use the 8228, I needed another method of producing these three pulses.

A very simple solution to this problem is shown in Fig. 3. When the INTA status bit is valid, PDBIN is allowed to

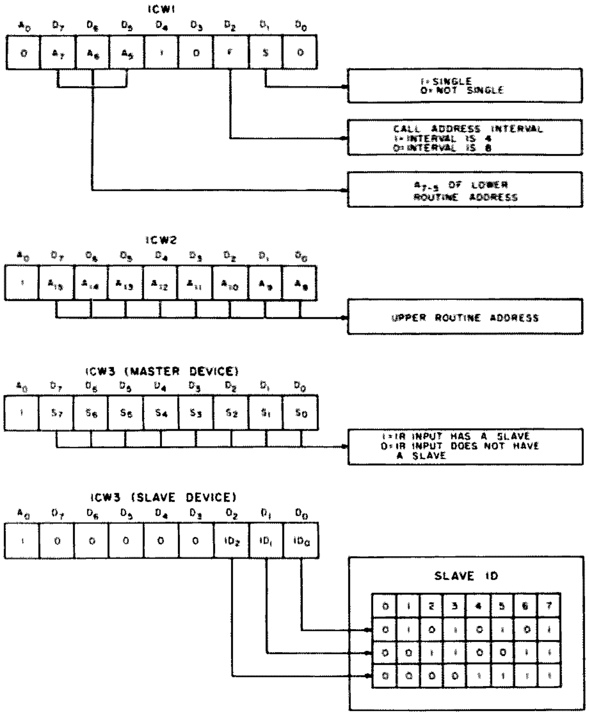

Fig. 5(a). Initialization command word formats. (Courtesy of Intel.)

give the first of the three $\overline{\text{INTA}}$s to the 8259 and also to clock the 7474 dual flip-flop. Clocking the 7474 keeps the 7400 NAND gate between the PDBIN bus pin and the 7474 enabled (i.e., pin 1 of the 7400 is high) so that the next two PDBINs can give the 8259 the next two $\overline{\text{INTA}}$s that it requires to gate the address onto the data bus.

After getting all three bytes of the call instruction, the very next thing that the 8080 will do is push the contents of the program counter register onto stack. Since the $\overline{\text{INTA}}$s must be stopped after the 8259 has received three of them, the stack-status bit (SStack) is used to reset the 7474 flip-flop, turning off the 7400 NAND gate between PDBIN and the 7474 (i.e., making pin 1 of the 7400 low), stopping the $\overline{\text{INTA}}$ pulses to the 8259.

The entire logic diagram is shown in Fig. 4. The INTA pulse generator of Fig. 3 is shown in the upper left-hand corner of Fig. 4. As shown in the diagram, the 8259 is selected ($\overline{\text{CS}}$ low), and the appropriate set of data-bus buffers is enabled as soon as it is apparent that the 8259 will be accessed. This is known when the status bits have been latched and the address has been decoded. The bus drivers to the S-100 data IN bus are also enabled when a status INTA bit is received in response to an interrupt request, allowing the 8259 to give the three-byte call instruction to the 8080.

Address decoding is done using two 7485 four-bit magnitude comparators and an 8-bit DIP switch, which allows the interrupt controller to be addressed at any pair of the 8080's 256 input/output ports. Notice that, since two I/O ports are required for operation of the 8259, address bit A0 has been connected directly to the A0 pin of the 8259.

$\overline{\text{Read}}$ ($\overline{\text{RD}}$) or $\overline{\text{write}}$ ($\overline{\text{WR}}$) strobes (active low) are obtained by NANDing PDBIN with SINP (the status input bit) or PWR (processor write signal) with SOUT (the status output bit), respectively. This gives the necessary delay time

ICW1 = $\underbrace{1\ 1\ 0}$ 1 0 1 1 0 = D6 hex

Highest three bits of the low-order byte of the table starting address.

Single 8259 if = 1.

Interval = 4 if 1.
= 8 if 0.

ICW2 = 1 0 0 0 0 1 0 0 = 84 hex
= High-order byte of the table starting address.

ICW3 = Not required, since only one 8259 is being used in the system.

Fig. 5(b). Command word examples.

between chip select ($\overline{\text{CS}}$) and the $\overline{\text{RD}}$/$\overline{\text{WR}}$ strobes to the 8259 (50 ns minimum).

Since my system presently uses only one 8259, I have programmed it as a master by tying $\overline{\text{SP}}$ high. The three cascade buffer/comparator lines, CAS0 through CAS2, are left unterminated, since they serve no purpose when only one 8259 is used.

The eight interrupt-request lines to the 8259 from the S-100 bus are inverted to provide positive pulses to the 8259 from the negative pulses used in my system for interrupts. This is necessary since my system's interrupt-request lines (VI0 through VI7) go low and stay low until reset by software commands. The 8259, on the other hand, only acknowledges an interrupt if the interrupt-request register flip-flop is set by the rising edge of a pulse. Clearly, if I did not invert the interrupt-request lines before applying them to the 8259, the 8259 would never acknowledge an interrupt.

That completes the interfacing of the 8259 to the S-100 bus. The next problem is to program the 8259 to get it to do some of the fantastic things that it is supposed to be able to do.

Programming the 8259

The 8259 requires two types of commands to set it up for operation: (1) initialization command words (ICWs) and (2) operation command words (OCWs).

Initialization command words must be given to the 8259 before it is capable of doing anything. At least two are required, but, if the system is using any slave 8259s, three are needed. The first ICW goes into the lower of the two I/O addresses that have been provided for the chip (i.e., A0 = 0) and tells the chip three things: (1) whether or not this 8259 is the only one in the system, (2) whether the interrupt vectors are to be located four bytes or eight bytes apart in memory, and (3) the highest three bits of the low-order byte of the starting address of the interrupt-vector table.

The second and third of these probably need some explanation. The 8259 internally sets up an interrupt-vector table which contains the addresses to be sent to the 8080 for each of the eight interrupt-request lines to the 8259. Rather than have the user input the address of the service routine for each separate interrupt-request line, Intel decided to have the user input only the address of the first one (i.e., that corresponding to the IR0 line), and all of the rest of the addresses (i.e., those corresponding to the remaining seven IR lines) are spaced equally (either four or eight bytes) above the first one. So, you have to tell the chip, using the ICWs, where to start the table (i.e., the first address) and how far apart to space the addresses in the table. Table 1 shows how the low-order address bytes are set up in the 8259's internal interrupt-vector table for both the four- and eight-byte spacings.

You have probably already guessed that the second ICW is the high-order byte of the table starting address. This word must immediately follow ICW1 and must be sent

	Interval = 4								Interval = 8							
	Lower memory routine address															
	D7	D6	D5	D4	D3	D2	D1	D0	D7	D6	D5	D4	D3	D2	D1	D0
IR 7	A7	A6	A5	1	1	1	0	0	A7	A6	1	1	1	0	0	0
IR 6	A7	A6	A5	1	1	0	0	0	A7	A6	1	1	0	0	0	0
IR 5	A7	A6	A5	1	0	1	0	0	A7	A6	1	0	1	0	0	0
IR 4	A7	A6	A5	1	0	0	0	0	A7	A6	1	0	0	0	0	0
IR 3	A7	A6	A5	0	1	1	0	0	A7	A6	0	1	1	0	0	0
IR 2	A7	A6	A5	0	1	0	0	0	A7	A6	0	1	0	0	0	0
IR 1	A7	A6	A5	0	0	1	0	0	A7	A6	0	0	1	0	0	0
IR 0	A7	A6	A5	0	0	0	0	0	A7	A6	0	0	0	0	0	0

Table 1. Low-order interrupt vector byte constructed by the 8259. Refer to text for explanation. (Courtesy of Intel.)

to the higher of the two I/O ports assigned to the 8259 (i.e., A0 = 1).

The third ICW is only required by the 8259 if you are using some slave 8259s in your system. This word tells the master 8259 which of its interrupt-request lines will be coming from a slave 8259. The slave 8259(s) also needs ICW3 to tell it (them) which address on the cascade buffer/comparator lines it is to respond to. Most systems will be using only a single 8259 and will not require this word at all. You should note that bit 1 of ICW1 tells the 8259 whether or not to expect ICW3. If needed, ICW3 is sent to the higher of the two I/O ports assigned to the 8259.

Fig. 5(a) shows the format for each of the three ICWs required by the 8259. You should study this figure carefully before attempting to program your 8259.

An example might help you understand what's going on here. Suppose that you want to set up a jump table that is to start at 84C0 hex and is to have its addresses spaced four bytes apart in memory. (A jump table is just a table of jump instructions to other places in memory so that, when the interrupt vector brings you to one of these jump instructions, you immediately jump to the appropriate service routine located elsewhere in memory. This technique is used because most interrupt service routines are longer than four or eight bytes.) Assume also that you are using only one 8259. The two required ICWs are shown in Fig. 5(b).

Immediately after receiving the two (or three) ICWs, the 8259 is completely operational in the fully-nested mode. This means that the eight interrupt-request lines have a fixed priority structure, with IR0 having the highest priority and IR7 having the lowest priority. It should be clear that, if you start your interrupt-vector table at address 0000 hex and have an address spacing of eight bytes between interrupt vectors, the 8259's operation will be indistinguishable from other interrupt controllers, such as the 8214. Specifically, each interrupt request will cause the program to get to one of the eight addresses spaced eight bytes apart, starting at address 0000 hex, just as if the interrupt controller had used a restart instruction instead of the call instruction.

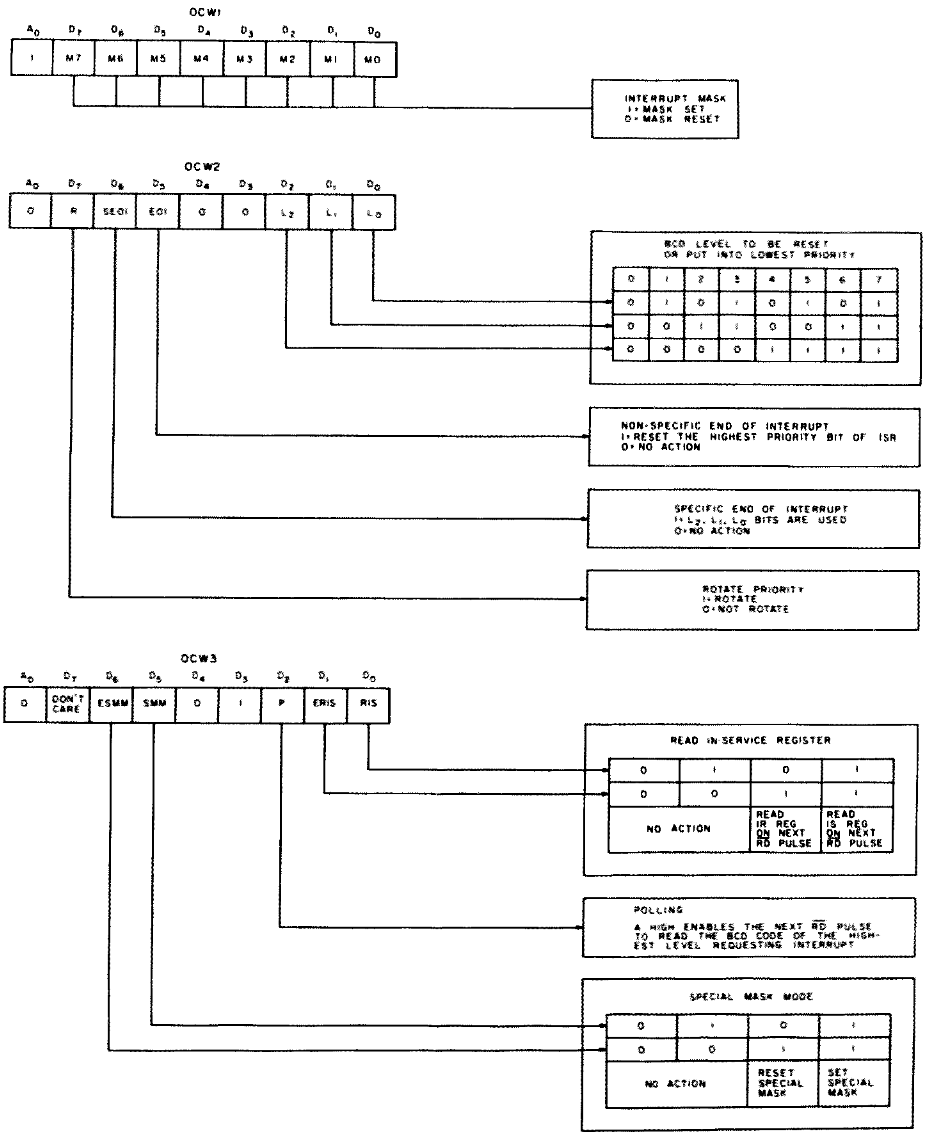

Fig. 6. Operational command word formats. (Courtesy of Intel.)

ICW1 = $\underbrace{0\ 0\ 0}$ 1 0 1 1 0 = 16H

Upper 3 bits of the lower byte of the jump table starting address.

Single 8259.

Interval = 4 bytes.

ICW2 = 1 0 0 0 0 1 0 0 = 84H

ICW3 = Not needed, since only one 8259 is in the system.

Fig. 7. Initialization command word example.

```
MVI A, 16H    ;Put ICW1 into the accumulator register.
OUT FCH       ;Output it to the lower 8259 I/O port.
MVI A, 84H    ;Put ICW2 into the accumulator register.
OUT FDH       ;Output it to the upper 8259 I/O port.
```

Fig. 8.

```
8400 JMP (Address for IR0)    ;The addresses here are those
8404 JMP (Address for IR1)    ;of the service routines for
8408 JMP (Address for IR2)    ;the interrupt-request lines
840C JMP (Address for IR3)    ;indicated.
  •
  •
  •
841C JMP (Address for IR7)
```

Fig. 9.

```
(Address for IR2)  Push B      ;Push contents of 8080's internal
                   Push D      ;registers onto stack for safe
                   Push H      ;keeping.
                   Push PSW
                   EI          ;Enable interrupts.
                     Interrupt service routine
                   DI          ;Disable interrupts.
                   MVI A, 20H  ;End of interrupt command (OCW2).
                   OUT FCH     ;Send it to the 8259.
                   POP PSW     ;Restore 8080's internal registers
                   POP H       ;to preinterrupt status.
                   POP D
                   POP B
                   EI          ;Enable interrupts again.
                   RET         ;Return to interrupted program.
```

Fig. 10.

OCW2 = 0 0 1 0 0 $\underbrace{X\ X\ X}$ = 20H

No rotate

No specific EOI

EOI = 1 to reset highest priority bit of the ISR.

Don't care.

Fig. 11.

There are several other modes of operation available with the 8259. One is the rotating-priority mode referred to earlier. This mode allows two options: (1) auto mode, where the last interrupt request serviced is rotated to the lowest priority position; this essentially gives all interrupt-request lines equal status, and any device will have to wait, at most, for seven other devices to be serviced, once each, before it in turn is serviced; or (2) specific mode, where the programmer specifies, via an operational command word (OCW2), which of the interrupt-request lines is to have the lowest priority.

Another mode available with the 8259 is the polled mode. This mode allows the programmer to prevent incoming interrupt requests on the IR lines from interrupting the 8080 but still allows the 8080 to read, from the 8259, which bits in the interrupt-request register or the in-service register are set. This allows the processor to choose when it wants to service the interrupts instead of being interrupted by the requesting device.

It should be noted that the interrupt-mask register (IMR) may be set at any time following the ICWs, enabling the programmer to disable (mask off) any of the interrupt-request lines in any of the above modes.

All of the above modes are selected by the operational command words. OCW1 sets the interrupt-mask-register bits. This word is sent to the higher of the two I/O ports assigned to the 8259. OCW2 and OCW3 allow for mode selection, as shown in Fig. 6. You should note that OCW2 is always required before returning from an interrupt service routine and is used to reset the ISR bit that has just been serviced.

Some practice is needed to get used to using the ICWs and OCWs, but it is really not as formidable as it seems at first. I recommend that you study Figs. 5 and 6, along with Intel's data sheet on the 8259, prior to doing any fancy programming involving the chip. Intel's 1977 *Data Catalog* is available for $2.50 from: Intel Corporation, Literature Department, 3065 Bowers Avenue, Santa Clara CA 95051.

Programming Example

This example will be somewhat simple and will show only the basics in using the 8259 as a more-or-less conventional interrupt controller. An "H" following any num-

INST. NO.	MNEMONIC	A0	D7	D6	D5	D4	D3	D2	D1	D0	OPERATION DESCRIPTION
1	ICW1 A	0	A7	A6	A5	1	0	1	1	0	Byte 1 initialization, format = 4, single.
2	ICW1 B	0	A7	A6	A5	1	0	1	0	0	Byte 1 initialization, format = 4, not single.
3	ICW1 C	0	A7	A6	A5	1	0	0	1	0	Byte 1 initialization, format = 8, single.
4	ICW1 D	0	A7	A6	A5	1	0	0	0	0	Byte 1 initialization, format = 8, not single.
5	ICW2	1	A15	A14	A13	A12	A11	A10	A9	A8	Byte 2 initialization (Address No. 2).
6	ICW3 M	1	S7	S6	S5	S4	S3	S2	SI	S0	Byte 3 initialization — master.
7	ICW3 S	1	0	0	0	0	0	S2	S1	S0	Byte 3 initialization — slave.
8	OCW1	1	M7	M6	M5	M4	M3	M2	M1	M0	Load mask reg, read mask reg.
9	OCW2 E	0	0	0	1	0	0	0	0	0	Non-specific EOI.
10	OCW2 SE	0	0	1	1	0	0	L2	LI	L0	Specific EOI. L2, L1, L0 code of ISFF to be reset.
11	OCW2 RE	0	1	0	1	0	0	0	0	0	Rotate at EOI (Auto Mode).
12	OCW2 RSE	0	1	1	1	0	0	L2	LI	L0	Rotate at EOI (Specific Mode). L2, L1, L0 code of line to be reset and selected as bottom priority.
13	OCW2 RS	0	1	1	0	0	0	L2	L1	L0	L2, LI, L0 code of bottom priority line.
14	OCW3 P	0	–	0	0	0	1	1	0	0	Poll mode.
15	OCW3 RIS	0	–	0	0	0	1	0	1	1	Read IS register.
16	OCW3 RR	0	–	0	0	0	1	0	1	0	Read requests register.
17	OCW3 SM	0	–	1	1	0	1	0	0	0	Set special mask mode.
18	OCW3 RSM	0	–	1	0	0	1	0	0	0	Reset special mask mode.

Table 2. Summary of the 8259 instruction set. In the master mode, $\overline{SP}$ pin = 1, in slave mode $\overline{SP}$ = 0. (-) = do not care. (Courtesy of Intel.)

ber indicates that the number is in hexadecimal.

Assume that the system is to be set up as follows: (1) You want to operate in the fully-nested mode, no bits masked off, and interrupt-request zero (IRO) is to have the highest priority. (2) You will have a jump table starting at 8400H, and the jump instructions will be spaced every four bytes in memory. (3) The 8259 I/O ports will be located at FCH and FDH.

The initialization command words (ICWs) for this configuration are shown in Fig. 7.

The program necessary to put the sample ICWs into the 8259 is shown in Fig. 8. The 8259 is set up to operate in the fully-nested mode as desired.

You must still set up a jump table, starting at 8400H in memory. It might look something like Fig. 9.

A typical interrupt service routine might look something like Fig. 10 for, say, IR2.

The OCW2 used in this routine is obtained as shown in Fig. 11. Again, you should remember that OCW2 must appear in every service routine before returning to the interrupted program. This is necessary to set up the 8259 for handling the next interrupt.

Conclusion

In this article, I have attempted to describe how to implement Intel's 8259 programmable interrupt controller into an 8080-based system utilizing the S-100 bus structure. The controller as shown will, of course, work in any S-100 system whose processor emulates the 8080. The circuitry required is fairly simple and works quite well, as shown in Fig. 4. This interrupt controller provides far more flexibility than any other interrupt controller that I have seen and yet is simple enough so that anyone can use it. Try it; you'll like it. ■

Charlene Babb Knadle WB2HJD
316 Vanderbilt Parkway
Dix Hills NY 11746

Use A Computer? Who, Me?

—*yes . . . you!*

I've been seeing those computer-related articles in amateur radio magazines for some time now, and flipping right past them without even giving myself a chance to see what aspect of computer knowledge they dealt with. I assumed not that they wouldn't interest me, but that they would be totally incomprehensible.

I was wrong, of course, but it wasn't the ham magazines that convinced me. It was a little brochure from my community library. I am lucky enough to live in a progressive neighborhood—well, a neighborhood with some progressive *individuals* in it. One of these individuals managed to procure a primary-source computer and several terminals for the school district, and he negotiated to have one terminal placed in the library. This necessitated offering the public an opportunity to learn to use it, and an announcement of the resulting course was what I read in the library brochure.

I'm not sure even now what motivated me to sign up for the course (maybe all those articles I'd seen?). But by the end of the first session, when we were given an opportunity to actually sit at the machines and punch the keys, I knew I was hooked. Computers are permeating our society, and we may as well learn to use them, I told myself. My children will use them later, I'm convinced, so they may as well become comfortable with them now, I rationalized as I took them with me, during my practice sessions, into the locked booth at the library which nobody without *knowledge* is allowed to enter.

Once past the early glitch-filled practice sessions where I learned what mistakes I was prone to make and how to avoid them, I was delighted to see what I could do. I could play games that had previously been programmed into the computer memory for our entertainment and learning. These included "Stock Market," "Pollution," and the inevitable tic-tac-toe. Better, I could produce my own programs. I could write into the machine my own series of messages and have the computer type out one, several, or all of them as I chose. I could have it write vertical or horizontal columns of numbers. I could correct a single line or wipe out my whole program and begin again. I could have the machine repeat a process whatever number of times I told it to, and then stop. I could do all of these things, combined into one short program. It was a powerful feeling. But it was temporary.

When I had totally mastered the material we had been given and the five-session course came to an end, I was ready for more. Would a more advanced course begin? No. There was too much demand to repeat the introductory one. By the time the "advanced" course could be offered, the summer would be over and I would be involved in teaching adult education courses two nights a week.

So instead, I bought a copy of *Basic BASIC* (James S. Coan, Hayden Book Co.) and *Discovering BASIC* (Robert E. Smith, also Hayden), which I like even better (I've been told that *BASIC* by Albrecht is even better, and I've obtained Bob Albrecht's *My Computer Likes Me When I Speak In BASIC*), and I determined to use them to teach myself during the day.

But I had a problem. My problem was that I had no *problems*, that is, none of the types that computers are useful in handling. I am a practical person, and I like to work towards goals. I like for my interests to have potential for growth. I'm not willing to use the computer merely as an elaborate toy. (I *am* willing for *other* people to do that—I recognize the element of serendipity that can result in the discovery of something terribly important, whether doing pure research or just "fooling around.")

I thought of a way the computer could be useful to me. Why couldn't our library terminal be used to tap into computers that store library references—the type you don't usually find in *Reader's Guide*? I recently ran all over the place scouting out medical libraries to find articles I needed to help me do a medical research article. I'd hate to go through that again in some other area of interest. No doubt the librarian would have to call this service up, and it might cost, but I, for one, would be willing to pay.

I mentioned my idea to the reference librarian. "Oh," she said, "we have

that already. We just don't mention it unless someone comes in with a problem that in our judgment could be best solved that way." She showed me booklets and brochures. Sure enough, there it was. The service had been there all along, even before the Teletype™ had been put into the library. Half a dozen memory banks across the country were accessible.

"How much does this usually cost?" I asked.

"It can run from ten to about fifty dollars, but the average is about twenty-five dollars."

That was too much for me. I had envisioned about two dollars—maybe five. (Isn't everything at libraries supposed to be cheap?) And you had to pay for the search even if the computer came up with nothing. (Later, to my delight, I discovered a local medical library that provides a medical-articles search at a fee of only $3 for the public—more for doctors.)

But I couldn't tap into these services myself, just because I had access to an ASR-33. What use did I have for a computer? None at all, I concluded.

But that was before I talked to Hans Napfel WB2ZZB, who knows how to let a computer make life easier in the ham shack and in the rest of the house as well. And that was before Paul Wade WA2ZZF introduced me to the beauty of computer-generated art. It was also before the "Personal Computing '77 Trade Fair" in Atlanta drew 5,000 people and 140 exhibitors.

When the Wright brothers managed to keep their plane aloft, when Alexander Graham Bell managed to transmit a message intelligibly, and when Edison invented the phonograph, people asked, "But what do we do with it?"

Maybe I don't have much need for computers—now. But I've discovered how much fun they can be. And my children have been introduced to them, will be re-introduced periodically, and are not afraid to use them. When—not *if*— they become a necessary part of all our lives, I'll be ready.■

Christopher and Juliane watch as I enter the program. This isn't at all like a typewriter, they're thinking.

Sam Creason K6EW
2940 Arlington Ave.
Fullerton CA 92635

Bird Watching in BASIC Land

—another use for your micro

In the past two years or so, the microprocessor (uP) has had a substantial effect on amateur radio. Many articles on repeater controllers, CW machines, beam rotators, and the like attest to this. Nearly all these articles describe applications in which the uP exercises some sort of control function. However, as uP-based home computers become more powerful, and capable of "number-crunching," they will become more useful in the design of amateur radio equipment, as well. This article describes such a design application.

Several months ago, I set out to build a QRP CW transmitter which would cover the first 100 kHz of 40, 20, 15, and 10 meters. Rather than use a 40 meter vfo and a series of multipliers, I was inclined to try some sort of heterodyning scheme for frequency generation. Of course, the risk of generating objectionable outputs (birdies) always exists when such a scheme is used, since many outputs are produced. Charts are available which are useful in determining the frequencies at which these objectionable outputs will be produced.* However, using the charts soon becomes a tedious process, to say the least. To avoid the tedium, I wrote a program (in BASIC) which searches out and identifies the birdies.

*Markel, J. D., "Shrinking Intermodulation," *EDN*, August, 1967, pp. 56-65.

The Problem

Applying signals at two different frequencies to a mixer produces a large number of outputs. Some of these outputs are harmonics (including the fundamental) of each of the applied signals. The remaining outputs are "beat products"—the so-called sum products and difference products. These are outputs at frequencies corresponding to $IF_1 \pm$

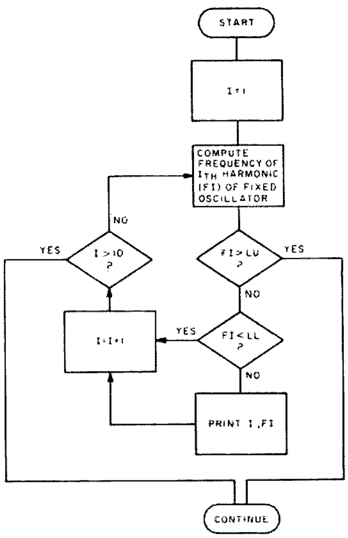

Fig. 1. Flowchart of the routine which searches for harmonics of the fixed oscillator.

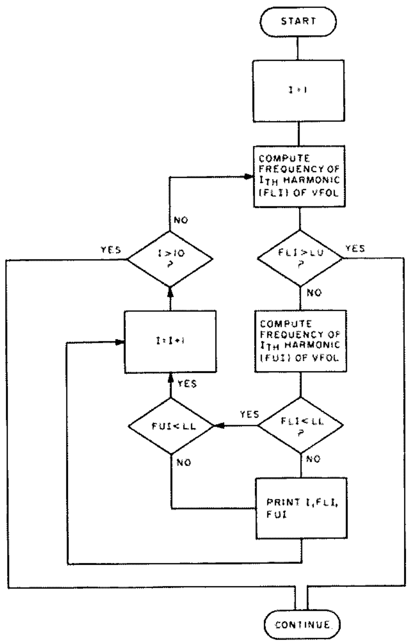

Fig. 2. Flowchart of the routine which searches for harmonics of the vfo.

JF$_2$, where I and J are integers and F$_1$ and F$_2$ are the frequencies of the applied signals. The sum, I + J, is called the *order* of the signal. For example, the difference product which is composed of the third harmonic of F$_1$ and the fourth harmonic of F$_2$ is a seventh-order product. Similarly, the sixth harmonic of F$_1$ is a sixth-order product, since I = 6.

Generally, the second-order sum or difference product is the signal of interest in a heterodyne frequency-generating process. For example, a very common way to implement an 80/20 meter rig is to mix the output of a 9 MHz crystal oscillator with the output of a 5.0-5.5 MHz vfo. As the vfo is tuned from 5.0 to 5.5 MHz, second-order outputs will be produced at 14.0-14.5 and 4.0-3.5 MHz. One or the other is selected by appropriately tuning the output of the mixer. The frequency of the other second-order beat product is sufficiently far away to be of little concern. Whether any of the remaining beat products or any harmonic is troublesome depends on the order of the product or harmonic, the type of mixer which is used, and the frequency of the product. Generally, the higher the order, the lower the amplitude. If a double-balanced diode mixer is used, it will suppress to a degree both fundamental frequencies, their even-order harmonics, and all beat products involving even-order harmonics of either frequency. Of course, if the frequencies of the vfo and fixed oscillator are chosen so that no undesirable outputs fall within or near the desired range, the design and implementation of the circuit is simpler. That's the purpose of the program.

The Program

The program consists of five sections. The first allows the operator to specify values for the lower and upper limits of the frequency of the vfo (VFOL and VFOU, respectively), the frequency of the fixed oscillator (FXD), and the lower and upper limits of the frequency of the range of interest (LL and LU, respectively). If any birdie falls within these limits, its characteristics will be listed.

The remaining four sections of the program search for various types of birdies. The first section determines if any harmonics of the fixed oscillator fall within the range of interest. The second performs a similar search for harmonics of the vfo. The third searches for sum products while the fourth searches for difference products. Harmonics and beat products through the tenth order are examined.

Flowcharts of each of the latter four sections are shown in Figs. 1, 2, 3, and 4. Most of the terms which are used in the flowcharts differ from the corresponding terms in the listing of the program, Fig. 5. The terms in the flowcharts were chosen to help make the logic clear. They can't be used in the program because of the restriction in BASIC concerning the number of characters in

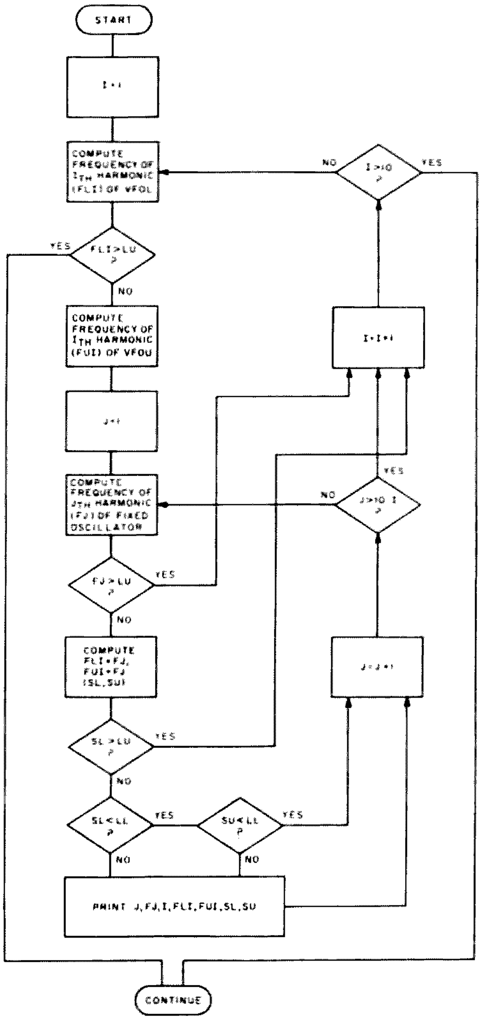

Fig. 3. Flowchart of the sum products search.

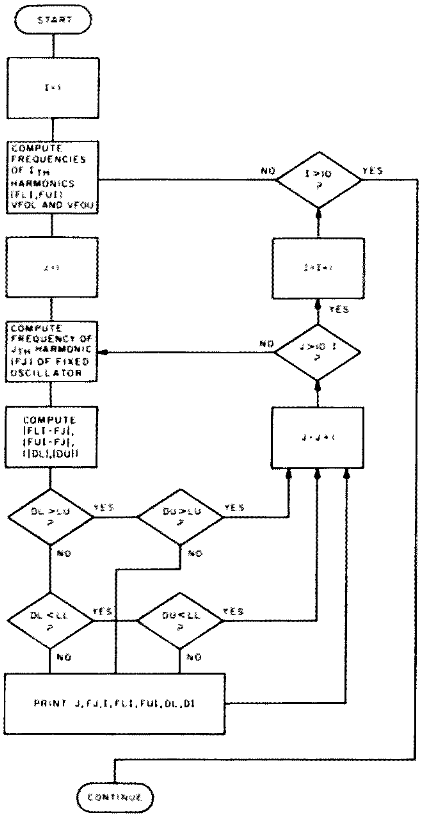

Fig. 4. Flowchart of the routine which searches for difference products.

the name of a variable.

Fig. 1 is a flowchart of that part of the program which searches for harmonics of the fixed oscillator that fall within the range of interest. Starting with I = 1, the program computes the Ith harmonic of the frequency of the fixed oscillator (FI) and compares it with the limits of the range of interest (LL and LU). If FI lies above the range, the program immediately branches to the next section, since all higher harmonics must also lie above the range. If FI falls within the range of interest, the order (I) and the frequency (FI) of the harmonic are listed. If FI lies below the range, the frequency of the next higher harmonic is screened.

Fig. 2 is a flowchart of that part of the program which searches for harmonics of the vfo that fall within the range of interest. Starting with I = 1, the program computes the frequency of the Ith harmonic of the lower limit of the frequency range of the vfo (FLI) and compares it with the upper limit of the range of interest (LU). If FLI lies above the range, the program immediately branches to the next section, since all higher harmonics must also fall above the range. If FLI does not lie above LU, the program computes FUI, the Ith harmonic of the upper limit of the frequency range of the vfo. If either FLI or FUI fall within the range of interest or if they lie on opposite sides, the order (I) and the limits of the frequency of the harmonic (FLI and FUI) are listed. If both FLI and FUI lie below the range, the next higher pair of harmonics is screened.

Fig. 3 is a flowchart of that part of the program which searches for sum products that fall within the range of interest. Starting with I = 1, the program computes the frequency of the Ith harmonic of the lower limit of the frequency range of the vfo (FLI). If FLI lies above the range of interest, the program immediately branches to the next section, since sum products which are produced by all higher harmonics of the vfo must lie above the range of interest. If FLI does not lie above LU, the program computes FUI, the Ith harmonic of the upper limit of the frequency range of the vfo. The program then computes the frequency of the Jth harmonic of the fixed oscillator. For any given value of I, J runs from 1 to 10-I or to a value such that FJ lies above the range of interest. In the latter case, I is incremented and J is reset to 1 even though it did not reach the value of 10-I. For each pair of I and J which is not excluded by these tests, the program computes the frequencies of the sum products which are produced by the lower and upper limits of the frequency range of the vfo and the fixed oscillator (SL and SU, respectively). It then compares these with the limits of the range of interest (LL and LU). If SL lies above the range, I is incremented and J is reset to 1, since any combination involving the unincre-

```
100 :### ####.###
110 :### ####.### ####.###
120 :### ####.###   ### ####.### ####.###
130 PRINT "VFØL, VFØU, FXD, LL, LU ?"
140 INPUT V,W,X,B,A
150 C = 0
160 PRINT "HARMØNICS ØF FIXED ØSCILLATØR"
170 FØR I = | TØ 10
180 C = C+X
190 IF C>A THEN 230
200 IF C<B THEN 220
210 PRINT USING 100,I,C
220 NEXT I
230 PRINT "HARMØNICS ØF VFØ"
240 D = 0
250 E = 0
260 FØR I = 1 TØ 10
270 D = D+V
280 IF D>A THEN 370
290 E = E+W
300 IF D<B THEN 320
310 GØTØ 330
320 IF E<B THEN 360
330 PRINT
340 PRINT USING 110,I,D,E
350 PRINT
360 NEXT I
370 PRINT "SUM PRØDUCTS"
380 D = 0
390 E = 0
400 FØR I = 1 TØ 10
410 C = 0
420 0 = D+V
430 IF D>A THEN 590
440 E = E+W
450 FØR J = 1 TØ 10-I
460 C = C+X
470 IF C>A THEN 580
480 F = C+D
490 G = C+E
500 IF F>A THEN 580
510 IF F<B THEN 530
520 GØTØ 540
530 IF G<B THEN 570
540 PRINT
550 PRINT USING 120,J,C,I,D,E,F,G
560 PRINT
570 NEXT J
580 NEXT I
590 PRINT "DIFFERENCE PRØDUCTS"
600 D = 0
610 E = 0
620 FØR I = 1 TØ 10
630 C = 0
640 D = D+V
650 E = E+W
660 FØR J = 1 TØ 10-I
670 C = C+X
680 F = ABS(C-D)
690 G = ABS(C-E)
700 IF F>A THEN 730
710 IF F<B THEN 750
720 GØTØ 760
730 IF G>A THEN 790
740 GØTØ 760
750 IF G<B THEN 790
760 PRINT
770 PRINT USING 120,J,C,I,D,E,F,G
780 PRINT
790 NEXT J
800 NEXT I
810 GØTØ 130
820 END
```

Fig. 5. Listing of a program which searches for undesired outputs.

mented value of I and a higher value of J will produce an SL (and SU) which lie above the range. If either SL or SU falls within the range of interest, or if they lie on opposite sides of the range, the order (J) and frequency (FJ) of the harmonic of the fixed oscillator, the order (I) and the frequencies of the harmonics of the vfo range (FLI and FUI), and the limits of the frequency range of the sum product (DL and DU) are listed.

Fig. 4 is a flowchart of that part of the program which searches for difference products. Frequencies of the difference products (DL and DU) are computed in about the same way as are frequencies of the sum products. However, absolute values are used in order to avoid the need to deal with negative numbers. For example, if the quantity $5F_1 - 6F_2$ is negative, there will be a beat product with a frequency of $6F_2 - 5F_2$. Computing the absolute value of $5F_1 - 6F_2$ produces the same result.

All possible difference products must be screened. Unlike the previous cases, even if a given combination of I and J produces a birdie which lies above the range of interest, the combination of, say, I+1 and J+1 may not.

The difference products are screened in much the same way as the other types of birdies. Each pair of DL and DU is tested to see if both members lie outside the range of interest and on the same side. If they do not, the characteristics of the birdie are listed.

Output

Output from the program is as shown in Fig. 6. This particular case involves a vfo which tunes between 5.4 and 5.5 MHz and a fixed oscillator at 12.5 MHz. The objective is

```
VFØL, VFØU, FXD, LL, LU ?
?5.4,5.5,12.5,6.5,7.6
HARMØNICS ØF FIXED ØSCILLATØR
HARMØNICS ØF VFØ
SUM PRØDUCTS
DIFFERENCE PRØDUCTS

  1    12.500     1     5.400     5.500      7.100     7.000

  2    25.000     6    32.400    33.000      7.400     8.000
```

Fig. 6. Output from the program, showing products which result when the outputs from a fixed oscillator at 12.5 MHz and vfo at 5.4-5.5 MHz are mixed to produce a signal at 7.1-7.0 MHz. The signal at 7.4-8.0 MHz is a birdie. The range of interest is 6.5-7.6 MHz.

```
VFØL, VFØU, FXD, LL, LU ?
?5.4,5.5,19.5,13,15.1
HARMØNICS ØF FIXED ØSCILLATØR
HARMØNICS ØF VFØ
SUM PRØDUCTS
DIFFERENCE PRØDUCTS

  1    19.500     1     5.400     5.500     14.100    14.000

  1    19.500     6    32.400    33.000     12.900    13.500



VFØL, VFØU, FXD, LL, LU ?
?5.4,5.5,26.5,20.,22.1
HARMØNICS ØF FIXED ØSCILLATØR
HARMØNICS ØF VFØ

  4    21.600    22.000

SUM PRØDUCTS
DIFFERENCE PRØDUCTS

  1    26.500     1     5.400     5.500     21.100    21.000

  2    53.000     6    32.400    33.000     20.600    20.000

  1    26.500     9    48.600    49.500     22.100    23.000



VFØL, VFØU, FXD, LL, LU ?
?5.4,5.5,33.5,26.5,29.6
HARMØNICS ØF FIXED ØSCILLATØR
HARMØNICS ØF VFØ

  5    27.000    27.500

SUM PRØDUCTS
DIFFERENCE PRØDUCTS

  1    33.500     1     5.400     5.500     28.100    28.000

  2    67.000     7    37.800    38.500     29.200    28.500
```

Fig. 7. Output from the program showing some products which result when a 5.4-5.5 MHz vfo is heterodyned to 20, 15, and 10 meters.

to produce a signal in the lower 100 kHz of the 40 meter band. The range of interest lies between 6.5 and 7.6 MHz (500 kHz either side of the desired operating range). Neither the fixed oscillator nor the vfo produces harmonics which fall within the range of interest, nor are there any sum products within the range of interest. The latter is usually true whenever a difference product is the desired signal. In such a case, the frequency of either the vfo or the fixed oscillator must lie above the desired operating range and generally lies above the range of interest. The desired signal is the second-order difference product. One other difference product lies within the range of interest. It's an eighth-order product which is composed of the second harmonic of the fixed oscillator and the sixth harmonic of the vfo. As the vfo is tuned from 5.4 to 5.5 MHz, the birdie moves from 7.4 to 8.0 MHz. Since it's of relatively high order, its amplitude is fairly low. Further, since it's composed of even-order harmonics, a double-balanced diode mixer likely can deal effectively with it.

For those who are interested, an analysis of the scheme which I settled on for a transmitter is shown in Fig. 7 without comment.

Finally, there is a useful extension to the program which is worth consideration by the person who has access to a CRT display. A multiband version could be written which would display the results in graphical form. In this way, the effects of the various parameters could quickly be evaluated. ■

LETTERS

from page 118

tect readers of *73* who may also get *QST*. Twenty-five months ago I sent to Kensco Communications of Quincy, Mass., for crystals for my two meter transceiver. Six weeks went by, so I wrote a letter of inquiry. No response. So I sent to the Federal Trade Commission Register to get my money refunded. Hundreds of others have been skinned by the Kensco name; now it is changed to Southeastern Communications, 2729 Independence Ave., Quincy MA 02169.

Wayne, I guess the boys at Newington are having a long nap when they will place an ad in *QST* for a corrupt company such as Southeastern Communications, formerly Kensco. Things got too hot so they changed their name, phone, and box number

Emil Carver K3MZO
Plymouth PA

Sorry to hear you got stung by a QST *advertiser. When we drop an advertiser from* 73, *we watch with interest when the ads appear in* QST... *particularly in view of the recent editorial on protecting the members. Several advertisers in* QST *are not acceptable in* 73. *Re Kensco: They went bankrupt and Southeastern bought out their stock of crystals at a bankruptcy sale, so there is no real connection between the two. We are not accepting ads from Southeastern, by the way.—Wayne.*

RAVING AT 13 WPM

After many years of hard work and struggling to get my code speed up with different code tapes (all of which had coded text on them) and copying W1AW, I decided to try the 13+ tape that you raved so much about.

Well, after using it, I have to say it's great. I went down with between 80% to 90% solid copy and passed my general exam with a score of 100%. And you were right when you said that you could fall asleep taking the code exam. I might have if I hadn't had the normal case of the jitters and shakes.

So, in closing, I say thanks for the proper study material needed for my exam. Oh, yes, some of the others that took their exams with me had used W1AW's 15 and 18 wpm text, but they had very long faces when they came out with their new blank 610 forms to resubmit for another try. That's all the proof I need to get the 20+ tape for my Extra exam.

David L. Kessler WB2JUJ
Hoosick Falls NY

CAUTION

The article, "The Heavyweight," by David Boyd in the August, 1978, issue mentions a technique that is dangerous. If you pour molten lead on top of water (in this case, mud), you may vaporize the water. The steam pressure can be quite high and could "blow" molten lead out of the mold and into the face of the pourer.

A safer procedure would be to make the mold out of plaster of Paris and bake it in the oven to completely dry it. You could then pour lead into it without risk.

Edward W. Menke N2AAJ
Schenectady NY

Ham Help

I wonder if your readers can perhaps supply me with information on the Olivetti TE300 terminal. While any information is welcome, I am specifically interested in a service manual for the keyboard/printer unit, ideally with electrical information. A wiring diagram for the power supply unit would also be helpful.

Charles Boelens
7311 Coronado Dr.
Burnaby BC
Canada V5A 1P9

Last January, I purchased while living in Baltimore a twelve-volt power supply, model POS-12202. This, as you may know, is a twenty-Amp power supply. I am aware now that this company went bankrupt. When I opened the power supply and was ready to put it in service after moving to Atlanta, Georgia (I purchased this the day we were moving out of town), I found that two of the capacitors had exploded. I immediately began searching to replace those, which I have done (with a higher grade computer capacitor).

However, now I find that the three power transistors mounted on the rear of the cabinet seem not to be functioning. I can trace power to these transistors but nothing beyond them. My problem is that I have had difficulty locating these transistors and am told that this is not a normal number. Could anyone help? The number shown on the transistor is 915-DNA-2-7721. I would appreciate any assistance anyone can give me concerning this matter.

Fred Musgrave, Captain
Project Director
Southern Territorial Headquarters
The Salvation Army
675 Seminole Ave., NE
Atlanta GA 30307

Corrections

Tom W7DND (see page 170, June, 1978, *73*) has written me that if you have trouble getting low swr on the current feed, he trimmed his coax for a match. It is now 1:1.3.

Jerrold Swank W8HXR
Washington Courthouse OH

Somebody should have noticed by this time discrepancies between the schematic and the PC board artwork on page 129 of the May, 1978, issue: for example, the B-E short on Q2; and the preferred connection for the speaker on the artwork as compared to the schematic (although I suppose you'll find audio almost anywhere on this circuit).

H.E. Eddy W2BU
Oneonta NY

Computers and the Real World

—practical D/A and A/D conversion

Kenneth D. Tentarelli W1FZA
Woodside Drive
Atkinson NH 03811

Aside from computers and their peripherals, much of the rest of the world is analog. Computers can perform many valuable tasks in isolation, but application possibilities are far greater when a computer can communicate directly with the analog world. Communication from a computer to the analog world is normally done using a digital-to-analog, or D/A, converter to change the digital output of the computer to an analog voltage. Similarly, an analog-to-digital, or A/D, converter can be used to convert analog voltages to digital words which can be sensed and measured by a computer.

Integrated circuits designed to be the heart of D/A converters are now becoming available from several mail-order parts suppliers. Although these devices were originally developed for use with additional custom control circuits, they can be used in conjunction with a microcomputer to do D/A and A/D conversion. In fact, one of the circuits described below can be set by a switch to do either D/A or A/D conversion. Thus, it enables communications to and from the analog world, depending upon application, with a minimum of components.

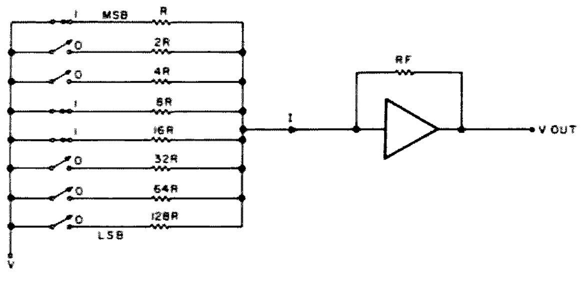

Fig. 1. Prototype D/A converter *using binary weighted resistors.*

D/A Conversion

The most basic form of D/A converter is shown in Fig. 1. It consists of switches which are used to represent a binary word and binary weighted resistors which contribute current to the output in proportion to the bit positions of the switches. This particular converter has eight switches, so it can convert an eight-bit digital word into an output current having $2^8 = 256$ step values. The output current for this type of converter is equal to the voltage source value divided by the largest weighting resistor value (here 128Ω) and multiplied by the decimal equivalent of the digital word. The digital word represented in the figure is 10011000, so the output current would be 152 V/128Ω Amperes. The output current could be set to values from 0 Amperes, for a digital word of 00000000, to 255 V/128Ω Amperes, for a digital word of 11111111, in steps of V/128Ω Amperes. Notice that we call the output of a D/A converter an analog signal but that it actually varies in discrete steps and only approaches an analog signal when the step sizes are small. Usually, it is more useful to have the output be in the form of a voltage rather than a current, and an operational amplifier is included to do the current-to-voltage translation.

A Practical D/A Converter

One disadvantage of using binary weighted resistors to make a D/A converter is that the resistors span a wide range of values. It is difficult to make accurate integrated

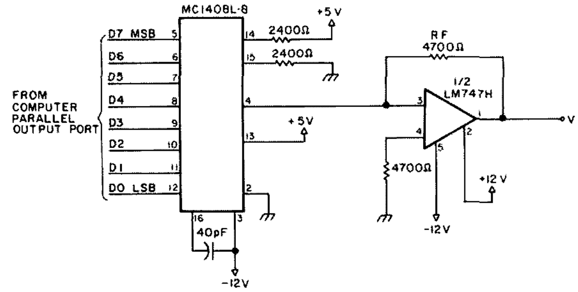

Fig. 2. *A practical D/A converter having an output range of 0 to 10 volts in 0.039-volt steps.*

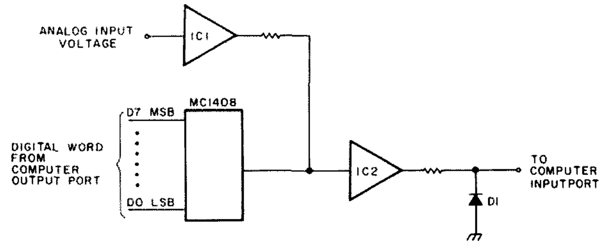

Fig. 3. *A basic analog-to-digital converter.*

circuit resistors over a 128-to-1 resistance range, so most integrated circuit D/A converters use a different type of resistor network, known as an R-2R ladder, which can give very high resolution with only two moderately sized resistor values. Fig. 2 shows an 8-bit D/A converter built around a Motorola MC1408L-8. Internally, this device uses an R-2R ladder, but, externally, it behaves the same as the binary weighted resistor prototype converter.

The MC1408 has eight input leads (D7-D0) which control the settings of internal current switches. The inputs are TTL compatible, so they may be driven directly by a microcomputer parallel output port, such as an 8212 or MC6820. As with the prototype converter, an amplifier is included to change the MC1408 output current to a voltage. The amplifier output voltage is given by:

$$V_{out} = 0.0021 R_f \left[\frac{D7}{2} + \frac{D6}{4} + \frac{D5}{8} + \frac{D4}{16} + \frac{D3}{32} + \frac{D2}{64} + \frac{D1}{128} + \frac{D0}{256} \right],$$

where D0 through D7 are binary values, either zero or one. Resistor Rf determines the amplifier gain and, therefore, its output voltage range. With Rf equal to 4.7kΩ, as shown in Fig. 2, the maximum amplifier output voltage is approximately 10 volts, and the step size is 0.039 volts. Rf may be decreased if a smaller output range is desired. For example, the maximum output voltage will be 5 volts, and the step size will be 0.0195 volts, if Rf is 2.4kΩ.

Using the D/A converter is straightforward, since it needs essentially no software driver program. All you need to do is output a digital word to the microcomputer parallel output port, and the converter will produce the corresponding analog voltage level at its output.

In many applications, a D/A converter is used to generate a time varying signal, such as a sine wave, by having the computer output a series of digital words. In these cases, it may be important to know how fast the D/A converter can react. The converter shown in Fig. 2 can convert a digital word to an analog output voltage in about 2 microseconds, which is faster than the instruction cycle time of all but bipolar microprocessors. In general then, the microcomputer rather than the D/A converter will limit the maximum frequency which the D/A converter produces.

Now Add A/D Conversion Capability

One of the most popular means of performing analog-to-digital conversion is known as the successive-approximation technique, and the heart of a successive-approximation A/D converter is a D/A converter such as the one described above. An A/D converter has an analog signal, usually a voltage, as its input, and the circuit tries to find a digital representation for the signal. The successive-approximation converter does this by using a D/A converter to generate an analog voltage which can be compared to the input signal. When the two analog signals are equal, the digital word applied to the D/A converter is also a valid representation for the analog input signal.

A basic block diagram of a successive-approximation A/D converter using an MC1408 is shown in Fig. 3. The analog input signal is applied to IC1, which is a high input impedance amplifier that keeps the converter from loading down the analog source. Output currents from IC1 and the MC1408 are compared by high-gain amplifier IC2. Whenever the output current of the MC1408 is greater than that of IC1, the output of IC2 will appear as logic 1 to the computer input port. Conversely, when the output current of the MC1408

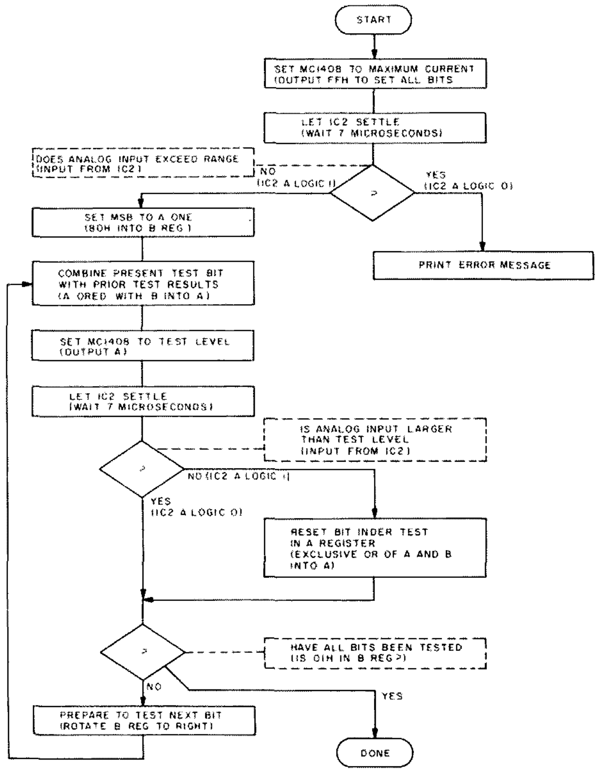

Table 1. A/D conversion routine. Register A contains results of all prior bit tests. Register B contains a logic one in the bit position under test.

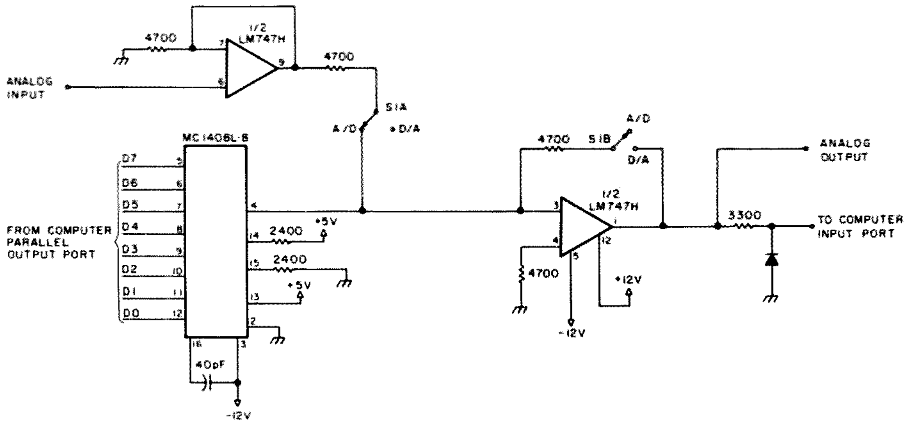

Fig. 4. A converter which can perform either D/A or A/D conversion, depending upon the setting of switch S1.

is less than that of IC1, the computer input port will see a logic zero (the output of IC2 will be a large negative voltage, but diode D1 will prevent the negative voltage from reaching the computer input).

By comparing Figs. 2 and 3, you can see that the differences between A/D and D/A converters are small. The circuit of Fig. 4 takes advantage of their similarity because it can be used as an A/D converter when desired, and, at the flip of a switch, it can be changed into a D/A converter for use in other applications. In the D/A conversion mode, IC1 is disconnected, and R_f is connected to establish the proper gain for IC2. In the A/D mode, IC1 is connected, and the gain of IC2 is made very high by disconnecting R_f.

Thus far, in discussing the A/D converter, I have ignored the problem of determining the exact digital word which should be presented to the MC1408 input so that its output is identical to the analog signal being applied to the D/A converter. The only way to determine the correct digital word is to sequentially generate digital words in a judicious manner so that each successive word corresponds more closely to the analog voltage. It is this sequential process which gives the successive-approximation converter its name. An algorithm which converges rapidly on the correct digital word is one which individually tests bits, beginning with the most significant bit, to determine whether that bit should be set to a one or zero. Each bit is tested by outputting a word with that bit set to a one. If the output of the MC1408 produced by the test word is less than the analog input signal (IC2 outputs a logic zero), then that bit should remain a one. If the MC1408 output is greater than the analog input (IC2 outputs a logic one), then that bit should be set to a zero. After a bit is tested and its value is known, the next most significant bit is tested in a similar fashion until all bit values are known.

A flowchart listing of the successive-approximation algorithm is given in Table 1. First, the analog voltage is checked to see if it exceeds the range of the converter. This is done by outputting word FFH (all bits set to one), which corresponds to an analog voltage of 10 volts. If the output of IC2 is a logic zero, then the input voltage must be greater than 10 volts, and an error message is printed. If the output of IC2 is a logic one, you can begin the testing of individual bits. Register B always contains a single one in the bit position being tested. After the bit test is completed, register B is rotated right to move the one into position for the next test. Results of all previous bit tests are combined in register A. An example of how the algorithm proceeds is given in Table 2.

A/D conversion is a slower process than D/A conversion because 8 digital words must be generated sequentially (one for each bit test) to complete the conversion of one analog value. After each word is output, a delay of at least 7 microseconds should be allowed for IC2 to settle, so the hardware limits the maximum conversion speed to 56 microseconds. To this, you must add the time needed for the microprocessor to cycle through the conversion algorithm instructions. Generally, this will extend the conversion time to several hundred microseconds. Fortunately, changes in the analog world tend to take place comparatively slowly.

Possible Applications

D/A converters synthesize sounds. With them, you can have a function generator of almost unlimited flexibility for amplifier testing, music creation, and perhaps even synthetic speech generation. A/D converters have possibilities which may be even more exciting, for they can tell a computer what is going on around it. They can tell it the temperature, how much power the house is consuming, how much sunlight is falling on a solar collector, and even whether it should be in pain because a brownout is occurring. ■

	A-register contents	B-register contents
First test (to see if input is greater than 5 volts)	80H (10000000)	80H (10000000)
Test passes (IC2 a logic 0)		
Next test (to see if input is greater than 7.5 volts)	C0H (11000000)	40H (01000000)
Test fails (IC2 a logic 1)		
Next test (to see if input is greater than 6.25 volts)	A0H (10100000)	20H (00100000)
Test fails (IC2 a logic 1)		
Tests continue until all bit positions are tested		

Table 2. This example shows how the conversion algorithm proceeds. Results of the first three bit tests are given for an analog input voltage assumed to be 6.0 volts.

World's Cheapest QSLs

—BASIC program keeps your log, too

Charles Zappala WA7VZR
8051 N.E. 143rd Street
Bothell WA 98011

This article describes an expansion of a BASIC program I wrote to manage log entries and provide an inquiry feature for the radio amateur. When I first wrote the program, I thought about perhaps modifying it to include printing QSL cards. This final program (Fig. 1) will show you how your microcomputer will not only print the QSL cards, but will also fill them out for you.

Imagine the work that is involved in filling out QSL cards after a contest weekend or field day! This system will log in the contacts, and then an additional function (PRINT QSLS) will read the log entries and print a QSL for each contact requiring a card! My IMSAI computer with 12K of RAM, 8K BASIC, and ASR-33 Teletype™ printer can print and fill out a QSL in about 30 seconds. The cards may not be very pretty, but they sure are fast and cheap. Anyway, who said that a QSL card has to be professionally printed to confirm a contact? I've sent a number of them out, and many hams consider them a novelty in QSL cards. And they are accepted.

The QSL itself is located between lines 910 and 945, thus allowing you to customize your own QSL. By using direct PRINT statements, you can easily substitute your own call and personal station information. Lines 936 and 937 read the R$ variable to insert the appropriate text for acknowledging receipt of a card or to please send a card. Line 938 leaves room for the operator to sign his name, thus making the card official.

Lines 918 to 926 are used to print the station callsign on the left side and a message to the effect that the QSL was printed by a microcomputer system on the right side. With some imagination

Fig. 1. Program listing.

```
10 REM *********** AMATEUR RADIO LOG, QSL AND INQUIRY SYSTEM *********
11 REM                                   BY COMPUTER
12 REM WRITTEN BY CHUCK ZAPPALA WA7VZR 8051 NE 143RD BOTHELL WA 98011
13 REM
14 REM THIS PROGRAM IS RELEASED TO PUBLIC DOMAIN          AUG 1977
15 REM
16 REM VERSION 1.1     WRITTEN IN ALTAIR 8K BASIC VERSION 3.1
17 REM
18 REM ***************************************************************
100 PRINT:PRINT"AMATEUR RADIO LOG AND INQUIRY SYSTEM":PRINT
102 PRINT:INPUT"ENTER TODAY'S DATE (YYMMDD)";D:PRINT
105 PRINT:PRINT"SELECT ONE OF THE FOLLOWING FUNCTIONS":PRINT:PRINT
110 PRINT"   1. ADD LOG ENTRIES"
115 PRINT"   2. PRINT LOG ENTRIES BY DATE"
120 PRINT"   3. PRINT LOG ENTRIES BY CALL SIGN"
125 PRINT"   4. PRINT ALL LOG ENTRIES"
130 PRINT"   5. PRINT QSL CARDS "
145 PRINT:INPUT"ENTER FUNCTION NUMBER";F
160 IF F=1 THEN GOTO 300
165 IF F=2 THEN GOTO 400
170 IF F=3 THEN GOTO 500
175 IF F=4 THEN GOTO 600
180 IF F=5 THEN GOTO 900
200 PRINT"INVALID, TRY AGAIN":GOTO 145
300 REM ADD LOG ENTRIES
302 PRINT:PRINT
304 PRINT"ADDING LOG ENTRIES BY DATA STATEMENTS":LIST 1000
400 REM PRINT LOG ENTRIES BY DATE
402 PRINT:PRINT
404 INPUT"ENTER FIRST DATE (YYMMDD)";N1:PRINT
406 INPUT"ENTER NEXT DATE (YYMMDD)";N2:PRINT
408 PRINT"LOG ENTRIES BETWEEN ";N1;" AND ";N2:PRINT:GOSUB  800
412 GOSUB 700
414 IF Z=999999 THEN 950
416 IF Z>=N1 AND Z<=N2 THEN 420
418 GOTO 412
420 GOSUB 720
422 GOTO 412
500 REM PRINT LOG ENTRIES BY CALL SIGN
502 PRINT:PRINT
504 INPUT"ENTER CALL SIGN";M$:GOSUB 800
506 GOSUB 700
508 IF A=999999 THEN 950
510 IF M$=X$ THEN 514
512 GOTO 506
514 GOSUB 720
516 GOTO 506
600 REM PRINT ALL LOG ENTRIES
602 PRINT:PRINT
604 GOSUB 800
606 GOSUB 700
610 GOSUB 720
612 GOTO 606
700 REM READ DATA FILE
702 READ A:Z=A:IF Z=999999 THEN GOTO 950
704 READ A$:Y$=A$
706 READ B$:X$=B$
708 READ C$:W$=C$
710 READ D$:V$=D$
712 READ E$:U$=E$
714 READ F$:T$=F$
716 READ G$:S$=G$
717 READ H$:R$=H$
718 READ J$:Q$=J$
719 RETURN
720 REM PRINT DATA RECORD
722 PRINT Z;" ";Y$;" ";X$;
723 PRINT TAB(22) W$;" ";V$;" ";U$;" ";T$;" ";S$;" ";R$;" ";Q$
724 RETURN
800 REM REPORT HEADER
801 PRINT "REPORT DATE ";D:PRINT
802 PRINT" DATE      GMT   CALL  FREQ  MODE  RST  QSL  NAME  QTH "
803 PRINT"           TIME                          R-M  S-R          "
804 FOR N=1 TO 51:PRINT"=";:NEXT N:PRINT"="
806 RETURN
900 REM PRINT QSL CARDS
902 PRINT:PRINT:PRINT" QSL CARDS DATE ";D:PRINT
904 GOSUB 700
906 IF A=999999 THEN 950
907 IF S$="N" THEN 910
908 IF S$="Y" THEN PRINT X$;" HAS BEEN QSL'D. ": GOTO 904
910 PRINT
913 PRINT"***********************************************************"
914 PRINT"CHUCK ZAPPALA, 8051 N.E. 143RD STREET, BOTHELL, WA. 98011"
916 PRINT:PRINT:PRINT
918 PRINT "W   W   A   77777 V   V ZZZZZ RRRR  : THIS QSL WAS PRINTED "
920 PRINT "W   W  A A      7 V   V    Z  R   R : BY A MICROCOMPUTER.  "
922 PRINT "W W W A   A    7  V   V   Z   RRRR  : THE DATA IS PRINTED  "
924 PRINT "WW WW AAAAA   7    V V   Z    R  R  : DIRECTLY FROM THE LOG"
926 PRINT "W   W A   A  7      V   ZZZZZ R   R : ENTRIES IN MEMORY    "
928 PRINT:PRINT:PRINT
930 PRINT" TO: ";X$;" CONFIRMING OUR QSO AT ";Y$;" GMT ";Z;" DATE "
932 PRINT" ON ";W$;" MHZ. MODE ";V$;" USING 260 WATTS "
934 PRINT" YOUR RST ";U$;" RIG IS FT101EE, ANT IS TH3JR AT 37 FT. "
936 IF R$="N" THEN PRINT " PLEASE QSL "
937 IF R$="Y" THEN PRINT " TNX FER UR QSL OM!!!"
938 PRINT" 73'S  TNX FER QSO.  SIGNED:                           OP "
940 PRINT"***********************************************************"
945 GOTO 904
950 REM END OF REPORT
952 PRINT"END OF REPORT":RESTORE:GOTO 105
999 END
1000 DATA 770502,1805,K9DAG,14.2,SSB,57,58,N,N,MERNIE IL
1001 DATA 770501,1809,WB6RRF,14.2,SSB,56,57,N,N,GLEN CA
1002 DATA 770725,2129,OZ3YI,14.2,SSB,56,56,Y,Y,ERIC DENMARK
1003 DATA 770730,0805,W7PCK,14.2,SSB,59,59,N,Y,JOHN  WASH
1004 DATA 770801,1245,WB5WCG,14.2,SSB,57,56,Y,N,DAVE NEW MEX
1005 DATA 999999
>

?FRE(X)
 2350

>
```

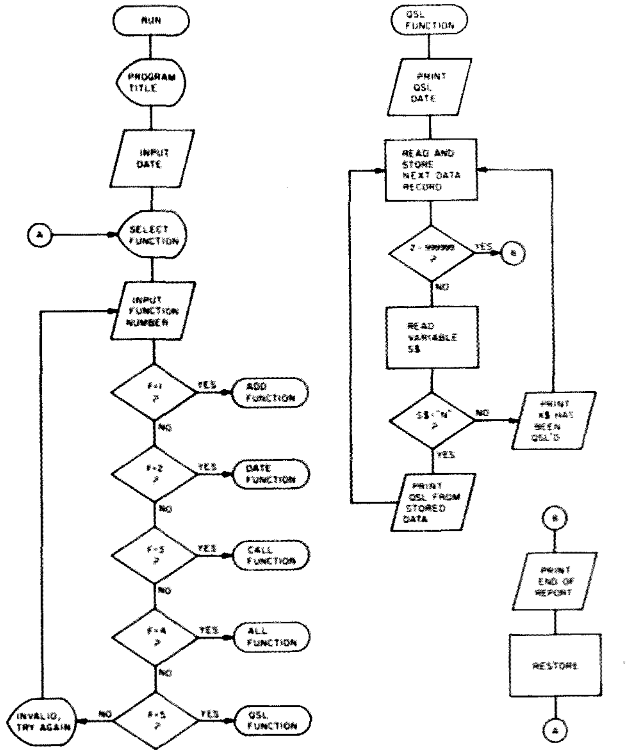

Fig. 3. System flowchart (partial) showing QSL function flow only.

and endurance, you could get carried away here and design a really elaborate QSL card suitable for framing like those fancy RTTY pictures and have the computer insert the QSL data on the picture.

Fig. 2 shows a sample of how the program looks. Functions 3 and 4 have been selected first. Notice that the data log entries are lined up evenly and that a log header is used.

Function 5 is then selected and the computer starts printing QSL cards. Notice that, after the second card, the printout shows that station OZ3YI has been QSLed, so no card is needed, and it begins printing the next QSL.

As QSL cards are received and sent, the operator should use the computer's BASIC text editor routines to modify the R$ and S$ ("Ys" and "Ns") for telling the computer the status of the QSL data. The first Y/N refers to QSLs sent, so don't mix them up. If you forget, refer to the printed header as shown in Fig. 2. If you don't have a good BASIC text editor, this program won't be very much fun to use — at least, the QSL feature won't be. However, it won't make any difference in contest operating, so there go all the QSL pencil cramps forever! ■

Fig. 2. Sample run.

```
RUN

AMATEUR RADIO LOG AND INQUIRY SYSTEM

ENTER TODAY'S DATE (YYMMDD)? 770804

SELECT ONE OF THE FOLLOWING FUNCTIONS

    1. ADD LOG ENTRIES
    2. PRINT LOG ENTRIES BY DATE
    3. PRINT LOG ENTRIES BY CALL SIGN
    4. PRINT ALL LOG ENTRIES
    5. PRINT QSL CARDS

ENTER FUNCTION NUMBER? 3

ENTER CALL SIGN? VB5VCG
REPORT DATE  770804

 DATE     GMT  CALL   FREQ  MODE  RST  QSL  NAME  QTH
          TIME                    H-M  S-R
*********************************************************
 770801  1245 VB5VCG  14.2 SSB 57 56 Y N DAVE NEV MEX
END OF REPORT

SELECT ONE OF THE FOLLOWING FUNCTIONS

    1. ADD LOG ENTRIES
    2. PRINT LOG ENTRIES BY DATE
    3. PRINT LOG ENTRIES BY CALL SIGN
    4. PRINT ALL LOG ENTRIES
    5. PRINT QSL CARDS

ENTER FUNCTION NUMBER? 4

REPORT DATE  770804

 DATE     GMT  CALL   FREQ  MODE  RST  QSL  NAME  QTH
          TIME                    H-M  S-R
*********************************************************
 770502  1805 K9QAG   14.2 SSB 57 55 N N MERNIE IL
 770501  1609 VB6RRF  14.2 SSB 56 57 N N GLEN CA
 770725  2129 OZ3YI   14.2 SSB 56 56 Y Y ERIC DENMARK
 770730  0805 V7PCK   14.2 SSB 59 59 N Y JOHN  WASH
 770801  1245 VB5VCG  14.2 SSB 57 56 Y N DAVE NEV MEX
END OF REPORT

SELECT ONE OF THE FOLLOWING FUNCTIONS

    1. ADD LOG ENTRIES
    2. PRINT LOG ENTRIES BY DATE
    3. PRINT LOG ENTRIES BY CALL SIGN
    4. PRINT ALL LOG ENTRIES
    5. PRINT QSL CARDS

ENTER FUNCTION NUMBER? 5

 QSL CARDS DATE  770804

*********************************************************
CHUCK ZAPPALA, 8051 N.E. 143RD STREET, BOTHELL, WA. 98011

V   V   A   77777 V   V ZZZZZ RRRR  : THIS QSL WAS PRINTED
V   V  A A      7  V V     Z  R   R : BY A MICROCOMPUTER.
V V V A   A    7   V V    Z   RRRR  : THE DATA IS PRINTED
VV VV AAAAA   7     V V  Z    R  R  : DIRECTLY FROM THE LOG
V   V A   A  7       V   ZZZZZ R   R : ENTRIES IN MEMORY

 TO: K9QAG CONFIRMING OUR QSO AT 1805 GMT  770502  DATE
 ON 14.2 MHZ. MODE SSB USING 260 WATTS
 YOUR RST 57 RIG IS FT101EE, ANT IS TH3JR AT 37 FT.
 PLEASE QSL
 73'S  TNX FER QSO.  SIGNED:                          OP
*********************************************************

*********************************************************
CHUCK ZAPPALA, 8051 N.E. 143RD STREET, BOTHELL, WA. 98011

V   V   A   77777 V   V ZZZZZ RRRR  : THIS QSL WAS PRINTED
V   V  A A      7  V V     Z  R   R : BY A MICROCOMPUTER.
V V V A   A    7   V V    Z   RRRR  : THE DATA IS PRINTED
VV VV AAAAA   7     V V  Z    R  R  : DIRECTLY FROM THE LOG
V   V A   A  7       V   ZZZZZ R   R : ENTRIES IN MEMORY

 TO: VB6RRF CONFIRMING OUR QSO AT 1609 GMT  770501  DATE
 ON 14.2 MHZ. MODE SSB USING 260 WATTS
 YOUR RST 56 RIG IS FT101EE, ANT IS TH3JR AT 37 FT.
 PLEASE QSL
 73'S  TNX FER QSO.  SIGNED:                          OP
*********************************************************
OZ3YI HAS BEEN QSL'D.

*********************************************************
CHUCK ZAPPALA, 8051 N.E. 143RD STREET, BOTHELL, WA. 98011

V   V   A   77777 V   V ZZZZZ RRRR  : THIS QSL WAS PRINTED
V   V  A A      7  V V     Z  R   R : BY A MICROCOMPUTER.
V V V A   A    7   V V    Z   RRRR  : THE DATA IS PRINTED
VV VV AAAAA   7     V V  Z    R  R  : DIRECTLY FROM THE LOG
V   V A   A  7       V   ZZZZZ R   R : ENTRIES IN MEMORY

 TO: V7PCK CONFIRMING OUR QSO AT 0805 GMT  770730  DATE
 ON 14.2 MHZ. MODE SSB USING 260 WATTS
 YOUR RST 59 RIG IS FT101EE, ANT IS TH3JR AT 37 FT.
 TNX FER UR QSL OM!!!
 73'S  TNX FER QSO.  SIGNED:                          OP
*********************************************************
VB5VCG HAS BEEN QSL'D.
END OF REPORT

SELECT ONE OF THE FOLLOWING FUNCTIONS

    1. ADD LOG ENTRIES
    2. PRINT LOG ENTRIES BY DATE
    3. PRINT LOG ENTRIES BY CALL SIGN
    4. PRINT ALL LOG ENTRIES
    5. PRINT QSL CARDS

ENTER FUNCTION NUMBER?

>
```

W2NSD/1 NEVER SAY DIE

editorial by Wayne Green

from page 6

terests of all of us instead of just what HQ perceives as its best interests. One of my long-term wishes is that the League could be gotten to work as the democratic organization it pretends to be.

This magazine is an open forum on any ham matters, so use it.

COMMENTS ON DOCKET 20777

1. In the original proposed rule making Docket 20777, the Commission proposed a set of bandwidth restrictions be placed on amateur operations. For various reasons amateurs objected to the limitations placed on them by these restrictions.

2. The stated purpose of Docket 20777 was to pursue the concept of deregulating amateur radio. While the proposed changes would to some degree have simplified the amateur regulations, they would have also placed a whole new set of restrictions upon experimenting amateurs. Thus, while many amateurs commented negatively on the proposal for reasons which would affect them personally, my objections were of a philosophical nature.

3. The Commission should take particular note of its own regulations when promulgating new rules for amateurs. There is one rule, and one rule only, in Part 97 which can only be interpreted as laying out the ground rules for the Commission and having no relevance whatever to individual amateurs. I refer to 97.1c of the amateur regulations, which bids the Commission to provide rules which will encourage experimenting and pioneering by amateurs. The Commission has been particularly blind to this regulation during the last twenty years, with virtually every proposal put forth being directly in conflict with it.

4. Now, in the matter of Docket 20777 and the request for amateur opinions on what should be permitted in the way of ASCII emissions, if the Commission is not to be in contempt of its own regulations, it should seriously consider unfettering amateurs from artificial and unneeded restraints. Amateurs should not have to beg and plead for permission to experiment with ASCII. They should, as a matter of course, be permitted to use any and every type of emission or transmission format. Unfortunately, the fact is that not only have amateurs been prohibited from experimenting by the formal rules, but they have also not even been able to get exceptions to these rules in the form of Special Temporary Authority (STA) to conduct these experiments. This is not just shameful—it invites legal action by amateurs. If amateurs had any real guiding body, they would have long ago taken the FCC to court for dereliction of its duty to amateurs and to the country, as well as for violation of its own regulations.

5. In Docket 20777, the Commission asks for comments on allowable bandwidth for the various amateur bands, on data transmission rates, on standards for baud rates, emission types, deviation, parity bits, and so on. The Commission managed to prevent radio amateurs from making any serious contributions to radio Teletype™ designs and concepts by establishing severe restrictions on techniques, allowing amateurs virtually no latitude to use their imaginations and experiment with new ideas. In fact, the Commission prohibited radio amateurs from using FSK techniques on the major amateur bands for a period of many years. I was one of those who fought the Commission to get FSK permitted on the amateur bands, and the fight went on over a period of many years.

6. It appears that the Commission is full of talk and promises for deregulation, but at every step of the way is afraid to let loose the apron strings and permit amateurs to have the latitude they need to experiment and pioneer some truly new communications techniques. The halting and restrictive approach in this docket is a perfect example of this reluctance.

7. The Commission is not unaware that radio amateurs, despite the virtually criminal restrictions put on them by the Commission, have still come up with many of the communications techniques which are in use today. Most shortwave telephone transmissions are today using single sideband, a technique made possible by a radio amateur and developed on the amateur bands. Most VHF voice communications are today using narrowband frequency modulation (NBFM), a technique pioneered by an amateur (W2GDG) on an amateur band (20m). I happen to be one of the original experimenters with this technique, some 30 years ago. I also was one of the early users of SSB some 20 years ago. Since then, we have had amateurs pioneering slow scan television (SSTV), inventing the parametric amplifier (W1FZJ), etc. That these inventions and pioneering efforts were carried out despite the severe restrictions by the Commission is a further testament to the amateur spirit. Imagine what might have come from this group of pioneers if they had not been restricted and discouraged by the Commission at every turn!

8. Has the overzealousness of the Commission been necessary? I think not. In case after case, amateurs, when permitted to govern themselves, have done it far better than the Commission has been able to. Rule changes via the Commission take years to be made, moving through the corridors with glacial speed. By the time most of them eventually emerge, so changed in concept as to be an embarrassment to the sincere amateurs who promulgated them, they have been unneeded and a blight. If amateurs are going to be regulated, they need a fast service, one which can keep up with the rapidly changing technology. The FCC has proven itself unable to provide such a service and should stop trying. This was the concept of deregulation.

9. May I remind the Commission that the concept of deregulation of the amateur rules came about as a result of a hearing held before the full Commission in January, 1974. I organized and led the discussion of this hearing, at which evidence was put forth which showed that amateurs, when left alone, are well able to establish their own rules and abide by them. We do not in any way need the Commission or any of the "services" it is furnishing. In fact, amateurs would do far better if permitted to be wholly self-sustaining.

10. Amateur radio has long been recognized by the Commission as being the best self-policed service under the FCC's jurisdiction. In today's climate of hooliganism and increasing crime, amid a growing disrespect of government and authority, amateur radio has held up very well. Sure, there have been isolated cases of bad amateurs, but these have been relatively few and far between. Only the belief of many amateurs that the FCC will take care of these problems for them has held them back from tackling these isolated cases and trying to deal with them without government help.

11. As a case in point, when amateur repeaters first started spreading over the country, the frequencies used were without plan. This led to so-called "repeater wars" where one group would try to force another off a disputed frequency. These lasted only a short time, and eventually the groups got together and formed repeater councils. These councils established frequency allocations for the repeaters and a national standard emerged to which about 98% of the repeaters today adhere. It was just at this time in history that the FCC's foolish repeater regulations were finally put into effect. These rules screwed things up for a couple of years, benefitting no one and causing a lot of wasted time and money for amateurs and for the Commission. The Commission suffered an unforgettable black eye over these rules and their dictatorial application by Prose Walker.

12. Going back in history a bit further, we have another similar example of amateurs self-governing their growth. When SSB was first being pioneered, there were reactions from the AM users. SSB stations set up a workable agreement whereby they would use the relatively unused high end of 20m for their experimental work and thus cause AM stations a minimum of interference. Eventually SSB grew until it worked its way down to the low end of the phone band. There were skirmishes, but the overall effect was a relatively peaceful transition from AM to SSB.

13. Now, to get back to a brief discussion of band-

HAM OF THE YEAR AWARD

Nominations for the award are due in to *73 Magazine* by November 15, 1978, and are to be 500 words or less, giving the details of the reason for the nomination. See editorial in the September *73* for details.

widths. Who is the FCC to say that bandwidth is everything? If amateurs wish to experiment on a ham band with wideband transmissions, why should they not? Bandwidth is a matter of sending a certain amount of intelligence per unit time. If amateurs want to try sending messages in a few microseconds instead of minutes and this requires a wide bandwidth, what is wrong with that? This type of experimentation could lead to time-sharing of bands instead of frequency sharing. The end result could be the same.

14. As a case in point, the Commission should be familiar with double sideband suppressed carrier (DSSB) emissions. With these the bandwidth is the same as an AM transmission, yet when it comes to frequency conservation, it is far more conservative than SSB, even though SSB requires only half of the bandwidth. The reason for this is in the detection system. SSB requires relatively little interference within the band of frequencies being used for good reception. With DSSB and a synchronous receiving detector, it is possible to have many stations using very slightly different frequencies and still have a minimum of interference between the stations. DSSB has the possibility of having perhaps ten times as many stations sharing the same band as there would be with SSB. With synchronous detection, only signals appearing on both sidebands simultaneously pass through the detector. At the time of the discovery of this system (by an amateur), it was not very practical due to the complexity of the detector. Today, with integrated circuits, such a system would be simple and inexpensive. Without amateurs to develop it and pioneer it, there is some question as to whether it will ever be popular.

15. As more and more microcomputers and microprocessors are brought into use for communications, we will see the need for higher and higher data transmission rates. Amateurs should be permitted to experiment with short-burst wideband systems. Any of these systems will be self-regulating. If amateurs cause too much difficulty to other amateurs, and the reasons for the trouble do not seem reasonable, amateurs use peer pressure to curtail offending transmissions.

16. In my position as the editor and publisher of an amateur magazine, I have gotten to know most of the pioneers and experimenters personally. I have found them almost without exception to be sincerely interested in providing something of value to amateur radio and our country. I have not found them to be arrogant about it or overbearing. In general, they go out of their way not to cause trouble. When frequencies were selected for radio Teletype transmissions, they were chosen to be of the least interference to any other services. Repeater groups have historically gone out of their way to protect small groups of experimenters using their bands. In amateur radio it is not the majority which carries the day, it is generally the minority which is zealously protected . . . and with the support of the majority.

17. It is a fact that only a small percentage of the radio amateurs can be considered to be experimenters and pioneers. This is no reason to put the others down. We all can't be pioneers. We have to have followers to use the systems which have been invented and pioneered by others. A few dozen pioneers got amateur repeaters started. Now we have approximately 75,000 amateurs using these systems. This has resulted in a pressure for further experimenting and inventing. Some of the repeaters today are almost incredible in their sophistication. This has only been made possible by the large number of users and the financing and interest they provided.

18. It is time for the Commission to stop putting down amateur radio and to truly start serious deregulation. I believe that the history of radio amateurs shows that they are capable of acting intelligently and in the best interests of everyone, particularly including the minority interests which include experimenting and the pioneering of new techniques.

19. The Commission could turn over the bulk of the license examinations to amateur radio clubs, thereby saving the Commission a great deal of time and expense. The Commission could encourage amateur groups to step up their self-policing efforts, thereby saving the Commission much expense in monitoring.

20. True deregulation of the amateur bands would allow amateurs to set up their own subbands and modes of emission. I believe the amateurs are capable of coping with the responsibilities involved. This was certainly demonstrated by the evolution of repeater groups, councils, and regional council meetings.

21. If freedom ever actually comes to amateur radio, I believe we will see an interest in experimenting and pioneering that is far beyond anything we've ever seen before and that the results will be beneficial to our country and the world. I believe that we might see some systems of communications which are far beyond anything even envisioned today. Such developments can *only* come from amateurs.

22. Commercial equipment manufacturers and government laboratories are unable to come up with truly creative improvements in communications because they are governed by practical monetary restraints. It is an unfortunate fact of scientific life that it is virtually impossible to get funds for the development of an idea that might not work. It has to be a proven idea before funding is possible. Amateurs work under no such constraint, which is why virtually every major breakthrough in history has been made by an amateur. This holds for all fields of science. Only an amateur can afford to spend years trying to get some fool idea to work . . . and have it fail. We need amateurs, but we need to have them able to work and try out ideas without it taking the FCC ten years to come up with permission for even the first experimenting.

23. Should the Commission again decide to limit amateur experimentation, it is entirely possible that the invention of a way for hundreds of stations to exchange computerized information (data) within a relatively small bandwidth could be prevented. Let's suppose that amateurs developed time-sharing double sideband techniques which permitted stations to operate within a few cycles of each other, even though each was very wide. The net result would be the ability of commercial and military stations to greatly increase their effective rate of information exchange.

24. Amateurs, by virtue of their numbers, also have an edge on government and commercial laboratories. Thousands of amateurs can work on problems which could only be funded for a handful of paid researchers. And, through this self-interest, thousands of amateurs would be developing knowledge and skills which would accrue to the benefit of our country. Would we have anywhere near the scientific population we have at present if it were not for amateur radio and the ability of this "hobby" to interest people in learning and developing skills?

25. The nearly 400,000 licensed radio amateurs in this country have an impact all out of proportion to their numbers. You will find amateurs in many of the top spots in the electronics and communications industry. They are there by virtue of their intense personal interest in electronics and communications. By unfettering amateurs from useless and archaic rules, we will encourage more amateurs to become interested in experimenting—and this will reflect itself in an even more valuable industry.

26. The Commission must be aware of the serious threat posed by the intensive construction of civil defense installations within the Soviet Union. They are also aware of the almost total lack of any similar preparation by the United States for nuclear war. Should such an event occur, it is very likely that much of the communications responsibility for this country would fall upon radio amateurs. In this case, the more sophisticated our systems, the better we will be able to meet the emergency. If we have to depend upon CW rigs and a few mobile transceivers, we will not be able to help very much. If we have high capacity data channels we can set up and run on a moment's notice, we will possibly be able to help hold things together. A decision by the Commission at this time to continue the present and past restrictions on amateur development could in this case be catastrophic for the country.

27. While it appears much too late to do anything constructive toward gaining the confidence of the African nations which have been devastating the ITU during the last few years, despite the fact that amateur radio could be of enormous benefit to these countries if they only knew about it, the possibility that our amateur bands may be severely restricted at the WARC conference next year further puts pressures on the Commission to allow amateurs to quickly develop systems which will permit communications even with a small fraction of our present bands. If the ham bands are cut to 50 kHz width or even to 20 kHz width next year, it will be too late by then for amateurs to start doing the experimenting they should be doing right now. This is assuming that the amateur bands are not deleted entirely, which seems quite possible, unfortunately.

28. Should amateurs lose their shortwave bands at the ITU next year, the need for advanced repeater and satellite communications will increase considerably. This will bring about the need for intensive development of better com-

munications systems for longer ranges than are usual on the VHF bands. This could intensify the need for high speed data channels, which could be developed by amateurs if they were not prohibited by the FCC.

29. Should amateurs lose their VHF bands at the ITU meeting next year, they would then need ways to accommodate perhaps 75,000 more amateurs on the already crowded shortwave amateur bands. Will we have to wait until then to even start trying to develop the communications systems we might be needing? Will amateurs again have to wait for years for the Commission to relax its prohibitions on experimenting before systems can be developed to cope with the changes?

30. The FCC should immediately start a serious program of actual deregulation of amateur radio. This could be done by dropping all emission restrictions within the amateur bands. While I don't doubt that the result would be chaotic for a short while, the need for a set of self-imposed rules would quickly bring things back into order. Time may be running out for this long-needed change.

31. The development of the microprocessor has made inevitable the continued development of electronics and its use in ever more areas of our lives. We are now seeing the beginnings of electronic transfer of funds (ETF), electronic mail systems (EMS), computer-to-computer exchange of data, computerized education (CAI), home computers, computerized designing of machinery and systems, etc. This means that our country (and the world) will be depending even more on a continued supply of people with an interest in electronics. Amateur radio has been the major supplier of this type of person—indeed, no other source of personally interested and dedicated people has been discovered—so without an increasing number of personally involved people we could lack the talent needed to develop and run the systems which seem inevitable. This is a further reason for the Commission to make every effort to unfetter amateur radio from restrictive and paralyzing rules, rules which are in direct opposition to the mandate provided by rule 97.1c.

32. One can only surmise how much the progress of electronics has already been stifled by the past *repression* of amateur radio. In the period from the end of World War II (1946) until 1963, when the FCC, under heavy pressure from the ARRL, proposed what was amusingly called "Incentive Licensing" (which proved to be exactly the opposite), the growth of amateur radio was a yearly 11%. For a period of 11 years after Incentive Licensing was proposed, amateur growth stopped dramatically. Had that growth not been stopped, we would today have well over one million radio amateurs, roughly three times as many as we have at present. How much has our country lost in new developments which these people would have brought us? How far behind is our industry today as a result of this setback in the supply of top talent for our electronics and communications industries?

33. One of the lessons of World War II which seems to be in danger of being forgotten was the enormous value of the body of radio amateurs. That war was the first of the electronic wars, with heavy dependence upon radar, data computers, sonar, electronics countermeasures, and instant communications. Having served aboard one of our submarines during that war, I am personally familiar with the role of electronics and communications and its effect upon the enemy. When I went to electronics school in the Navy, I found that virtually every instructor was a radio amateur. I found, also, that of 50,000 licensed amateurs, 80% (40,000) joined the armed services. Had I not been a radio amateur, I would not have had the interest to volunteer for service and thus operate and service all of the electronic equipment on a submarine. While we all hope that such an event will never come again, history tells us rather clearly that we must be prepared. This means we must have a strong body of radio amateurs. This means, in turn, a responsibility on the part of the Commission to do all in its power to assure the strength and potency of this body of individuals. The more amateurs are encouraged to experiment and pioneer in electronics and communications, the more value amateurs will have as a body. You cannot turn off the power to invent through restrictive rules and a refusal to grant special temporary authority for experimenting and then expect a quick recovery from these repressive measures.

34. Even though every lesson of psychology and animal training teaches us that both animals and humans respond better to *encouragement* and rewards, there is a strong tendency to approach every problem caused by people with a punishment reflex. The Commission, goaded on by the ARRL, has been responding to growth problems of amateur radio in this way and it has not worked. No amount of punishment was able to force amateurs to take the Extra Class license exam, as witness the utter failure of Incentive Licenisng. But as soon as the Commission provided rewards, there was an immediate change. In my response to the Incentive Licensing docket, I proposed the institution of special callsigns as a reward for achieving the Extra Class license. The Commission chose instead to follow the ARRL path of taking frequencies away from General Class licensees in order to force them to get a higher class license. They did not do this. When the special calls were finally authorized, years later, amateurs responded to this reward. Although it may go against the bureaucratic grain to even consider the solution to amateur problems in terms of providing rewards instead of punishments, the Commission will get far faster and better results in solving problems by this type of reasoning.

35. Much of the hesitancy of the Commission to authorize unusual communications techniques for amateur use was tied to a firm belief that FCC field monitoring stations should be able to spy on every amateur transmission. This meant that amateurs could not use any equipment or techniques not already in common use by the FCC. This, obviously, meant that amateurs were prohibited from experimenting with novel communications techniques. Should any remnants of this type of bureaucratic thinking still be in effect within the Commission, I put forth the same argument I did when I challenged the need for severe log keeping by amateurs: Has there been any serious historic need for this type of total monitoring of

amateur transmissions? I think not. The fact is that no matter what type of emission amateurs try out, there will be other amateurs able to monitor them—and the self-policing nature of amateur radio will prevail. In the early days of slow scan television, we had a few amateurs (not in the U.S.) who took advantage and transmitted pictures of an objectionable nature. It took very little time before this was squelched.

36. Since most of us pride ourselves on the freedoms we have in the United States, I feel it is important for every citizen to rise up In anger at restrictions and at repression. I feel that bad laws should be fought with every means at our disposal. The constitution of the State of New Hampshire reinforces this concept, bidding its citizens to take up arms against any laws deemed unreasonable. The FCC regulations hamstringing (pardon) amateur radio are certainly repressive and restrictive. They should be quickly abolished. If the Commission is afraid to trust amateurs with the amateur bands, then at least let us try a test of freedom within one of our bands and see if it is not possible for amateurs to determine their own agreements. Perhaps we could, as a test, remove all emission restraints on one ham band...perhaps 15m. I believe that the responsibility for the orderly use of our bands will bring amateurs together as they never have been before, and bring about a much more fraternal bond. I can see the developing, should our frequency bands survive WARC, of national conventions or conferences where new emissions and uses for our bands are discussed and evaluated. This would not be on the glacial scale of FCC rules, but an immediate and direct response to changing technologies.

DETROIT BOMBS AGAIN

It's been over 20 years since I've been really involved with an American car. In 1957, I bought my first Porsche and that car stayed with me for over 200,000 miles and 15 years. I doubt if I'll ever find a car as remarkable as that one.

Since sports cars can't be used for everything, I've used many other cars down through the years—a couple VW vans, a couple VW bugs, a couple VW hatchbacks, a Volvo station wagon, a Mercedes 300 sedan, a Rover 2000TC sedan, etc. The Mercedes was by far the most luxurious of the cars, but the Rover was the best driving by a wide margin. I once made the 250-mile trip from New York City to Peterborough in 2½ hours in the Rover . . . and that includes a gas stop. Fantastic car and incredibly safe to drive.

In the sports car division, when I finally sold my Porsche Speedster in 1972, I found that Porsches had priced themselves out of my market. Then I saw the Datsun 240Z. On first look I knew I had to have one of those. It was not a Porsche in handling by any means, but it was fun, and, with proper radar detection and CB alerting, it could get me to appointments even when I started late. This was updated with the 280Z 2+2, which handled a lot better than the 240. Datsun had learned something.

The recent flood of advertising and enthusiastic reviews for the Mazda RX7 caught me up. We've been using a Mazda truck which has defied even the most determined efforts by employees to destroy it, so I knew Mazda was something more than a G.E. lamp . . . if your memory goes back that far. The RX7, I'm delighted to report, is fantastic. You really need a radar detector with it because when you think you are driving 40 mph, you look at the speedometer and find it around 80. The car is comfortable and quiet at 100 mph and is so steady you can take your hands off the wheel until the passenger is chewing the upholstery.

All this brings me to the *73* traveling office, a Dodge van we bought last year to make it possible for me to keep on working while being driven to give talks to clubs, to go to hamfests, to see advertisers, etc. Peterborough may be a wonderful place to live and work, but it is an hour and a half away from Boston and two hours or more from everything else. This means that a trip wastes three to five hours of my time, time needed to answer mail, write newsletters, edit articles, etc.

Since there isn't enough room in a car to do much work, the obvious answer was a van. We shopped around and finally decided on a Dodge. This turned out to be one of my more glaring errors of judgment. We put $200 down at a nearby Dodge dealer and awaited the promised delivery. When the dealer had exhausted all sources east of the Mississippi, we came across exactly what we had been looking for about two miles further down the road . . . with the only exception being that this van had already been converted into just what we needed.

The Dodge dealer admitted that he had known about the Dodge down the road, but that guy wasn't an authorized Dodge dealer. We bought the converted van and asked for our $200 back. It's now over a year later and we still haven't gotten back the $200 deposit. The dealer, if anyone is interested, is Hackler Motors in Milford, N.H.

A few days after getting the van, I popped into it and drove to downtown Peterborough . . . and It stopped dead in the middle of town. It wouldn't start. It turned out to be a choke problem which required the removal of the engine cover inside the van and the manual manipulation of the carburetor. Three visits to the local Dodge garage and dozens of stalls with removals of the engine cover and much hassle brought no relief.

In desperation, we had a manual choke installed. This works, but it takes a trained expert to keep the damned engine going. It dies constantly and Dodge is unable to do anything about it. No wonder Chrysler is in deep trouble. How dare they put out a car with an engine which is so poorly designed that even their own garages can't get it to work?

Unfortunately, that wasn't the only problem with the van. We mounted an IBM typewriter on the table and I tried for several months to work while we drove. The idea was good, but the bucking and swaying of the van made it almost impossible to hit the right typewriter key or to read while in motion. I don't get upset from reading while my letters are bouncing up and down, but I sure get tired and it is difficult to keep my mind on what I am reading. Oh, we tried special shocks, anti-sway bars, and everything else we could find. The hulk still bounced high with every slight wave of the pavement. Even the seemingly smooth interstate highways are like roller coaster rides in the van.

Driving the van is much like maneuvering an ocean liner. It sways and lumbers around, with virtually no visibility aft. Few car drivers appreciate how little a van driver can see. It is foolhardy to come up on a van on its right or to follow very close . . . the driver just won't know you are there. You want some real fun . . . park a van . . . particularly one of the extended Dodge models. You don't get good at this without a *lot* of practice. It is an art form. Perhaps this explains the wrinkled look on the back end of many vans.

Vans have a lot of good uses, undoubtedly, but I really can't enthusiastically recommend them for mobile offices. At least, I sure can't recommend a Dodge . . . for anything.

HOME SECURITY OPPORTUNITY

A recent announcement that Tandy (Radio Shack) will be opening a pilot store in Ft. Worth selling security equipment brought to mind the several editorials I have run down through the years urging radio amateurs interested in starting their own businesses to give this line some serious consideration.

The security business is a natural for the ham, since it requires a knowledge of electronics and some experience in putting things together and getting them to work. It is a business which can be started very small and with very little initial investment. It's a business where every home, every car, and every business in your neighborhood or town is a prime prospect for a sale.

Security can cover the whole gamut from a simple door alarm on a house to a sophisticated system which will detect heat, smoke, dampness, intruders, etc. It can tie in with microcomputers, slow scan television, and all those nice toys hams have been playing with for the last couple of years. What store owner wouldn't like to have a system whereby he could see what is going on in his store right from his home living room? With slow scan television and a dedicated phone line, the cost is remarkably low, even after your generous commission. You can even add a motion detector to call him to the monitor, should he get wrapped up in a ball game.

While I'd rather see the security business bring in money to thousands of entrepreneurs with their own shops, the Tandy pilot store, should it work out the way they hope, will bring home security stores into every locality in the country . . . and the end result will be a plus for everyone but the crooks.

THE ENTREPRENEUR PHILOSOPHY

There are three basic ways to go in our country . . . working for yourself, working for someone else, or working for the government. Two of those virtually preclude making any substantial money . . . the third at least has possibilities, if no assurances.

Working in any government position is a sure loser for life, even at the few top jobs. Even if you do figure out how to get the gravy you can be found out, as a recent vice president discovered. It would require a fairly large book to evaluate the various opportunities and roads to success, but a reasonable blanket statement

can be made that few people make very much working for others.

I can't give you a six-week course in how to achieve success within the confines of an editorial in *73*, but even a casual consideration of the matter should make it clear that the best chances for personal success lie in the entrepreneurial direction. I can't help thinking of the two 19-year-old kids out in California who went into business instead of going to college and are today worth about $10 million. They've been in business now for over two years, so perhaps you might not consider their growth meteoric.

Of course I'm talking about Steves Wozniak and Jobs, who, because they didn't have enough money to buy a computer kit two years ago, designed their own. Today the firm is known as Apple Computers.

Both computers and security are guaranteed growth industries, so the chances of losing with either of these is a lot lower than it is with other pursuits. Both are still in their infancy and have incredible possibilities.

JUNE WINNER

Our readers have voted "The S-Meter Bender" as the most popular article in our June issue, so author Jerrold Swank W8HXR will be receiving a bonus $100 check from us at his Washington Court House OH QTH.

Ham Help

I need help with the alignment instructions for a Hallicrafters S-22R. If anyone has a service manual, I would appreciate the use of it just long enough to make a copy. I will gladly pay postage for certified mail, both ways, plus any reasonable fee. This was my late brother's first receiver, and I would like to use if for QSOs once again.

Neil D. Reznik WB3KIL
532 Portland Drive
Broomall PA 19008

I'm looking for the maintenance manuals and schematics for the National HRO-500 receiver. These receivers have been used in MARS programs over the years. I am willing to pay for duplication costs, if not too exorbitant.

Anton M. Giroux
DA1NF/WD6AXL
HHT, 2d ACR, SigO
APO NY 09093

I have a National SW-3 regenerative receiver and would greatly appreciate it if anyone could send me coil data on this set or would sell me the coils or coil forms. I also could use a bottom panel, if anyone has one wasting away in the junk box.

Kurt Denke WB7WRR
3253 20th Avenue West
Seattle WA 98199

Help! Does anyone have experience in eliminating noise from VW Rabbits or Sciroccos? The voltage regulator is built into the alternator in these cars, and I still have excessive noise on my 15 and 10 meter rigs.

Kenneth M. Price XE1TIS
PO Box 337
Irapuato
Mexico

The International Association of Airline Hams is attempting to locate hams working for all the world's airlines so that they may be given the opportunity to join our club. They should contact me for more information.

Carl H. Crumley N4VD
Secretary, IAAH
512 N. Harrison Ave.
Cary NC 27511

I would like someone to design and possibly build an autopatch-like telephone interconnection device. I would pay a fair fee. Write for specifics.

Gabe Gargiulo WA1GFJ
160 Elm St.
North Haven CT 06473

I need the schematic for a Hallicrafters S-129.

Felix Mullings W5BVF
021-16th St.
Galveston TX 77550

OSCAR Orbits

FINDING OSCAR

The listed data tells you the time and place that OSCAR 7 and OSCAR 8 cross the equator in an ascending orbit for the first time each day. To calculate successive OSCAR 7 orbits, make a list of the first orbit number and the next twelve orbits for that day. List the time of the first orbit. Each successive orbit is 115 minutes later (two hours less five minutes). The chart gives the longitude of the day's first ascending (northbound) equatorial crossing. Add 29° for each succeeding orbit. When OSCAR is ascending on the other side of the world from you, it will descend over you. To find the equatorial descending longitude, subtract 166° from the ascending longitude. To find the time OSCAR 7 passes the North Pole, add 29 minutes to the time it passes the equator. You should be able to hear OSCAR 7 when it is within 45 degrees of you. The easiest way to determine if OSCAR is above the horizon (and thus within range) at your location is to take a globe and draw a circle with a radius of 2450 miles (4000 kilometers) from your QTH. If OSCAR passes above that circle, you should be able to hear it. If it passes right overhead, you should hear it for about 24 minutes total. OSCAR 7 will pass an imaginary line drawn from San Francisco to Norfolk about 12 minutes after passing the equator. Add about a minute for each 200 miles that you live north of this line. If OSCAR passes 15° east or west of you, add another minute; at 30°, three minutes; at 45°, ten minutes. Mode A: 145.85-.95 MHz uplink, 29.4-29.5 MHz downlink, beacon at 29.502 MHz. Mode B: 432.125-.175 MHz uplink, 145.975-.925 MHz downlink, beacon at 145.972 MHz.

OSCAR 8 calculations are similar to those for OSCAR 7, with some important exceptions. Instead of making 13 orbits each day, OSCAR 8 makes 14 orbits during each 24-hour period. The orbital period of OSCAR 8 is therefore somewhat shorter: 103 minutes.

To calculate successive OSCAR 8 orbits, make a list of the first orbit number (from the OSCAR 8 chart) and the next thirteen orbits for that day. List the time of the first orbit. Each successive orbit is then 103 minutes later. Due to incorrect tracking information obtained during the early days of OSCAR 8, the equator crossing times contained in most published charts are in error. To correct this error, multiply the orbit number by 0.00205 minutes and add the result to the equator crossing time as printed in the chart. For example, the published time for orbit number 3352, the first equatorial crossing on November 1, 1978, is 0018:50 UTC. Thus, for orbit number 3352, the corrected equatorial crossing time would be:

Corrected time = 0018:50 + (3352 × 0.00205 minutes)
= 0018:50 + (6.8716 minutes)
= 0025:42.3

The longitude figures contained in the OSCAR 8 chart are virtually unaffected by this tracking error. The chart gives the longitude of the day's first ascending equatorial crossing. Add 26° for each succeeding orbit. To find the time OSCAR 8 passes the North Pole, add 26 minutes to the time it crosses the equator. OSCAR 8 will cross the imaginary San Francisco-to-Norfolk line about 11 minutes after crossing the equator. Mode A: 145.85-.95 MHz uplink, 29.4-29.50 MHz downlink, beacon at 29.40 MHz. Mode J: 145.90-146.00 MHz uplink, 435.20-435.10 MHz downlink, beacon at 435.090 MHz.

Oscar 7 Orbital Information

Orbit	Date (Oct)	Time (GMT)	Longitude of Eq. Crossing °W
17731 Bbn	1	0031:05	67.2
17744 Bbn	2	0125:22	80.8
17756 Abn	3	0024:43	65.6
17769 Bbn	4	0119:00	79.2
17781 Bbn	5	0018:21	64.1
17794 Abn	6	0112:38	77.7
17806 Bbn	7	0011:59	62.5
17819 Bbn	8	0106:16	76.1
17831 Abn	9	0005:37	61.0
17844 Bbn	10	0059:54	74.5
17857 Bbn	11	0154:11	88.1
17869 Abn	12	0053:32	73.0
17882 Bbn	13	0147:49	86.6
17894 Bbn	14	0047:10	71.4
17907 Abn	15	0141:27	85.0
17919 Bbn	16	0040:47	69.9
17932 Bbn	17	0135:05	83.5
17944 Abn	18	0034:25	68.3
17957 Bbn	19	0128:43	81.9
17969 Bbn	20	0028:03	66.7
17982 Abn	21	0122:20	80.3
17994 Bbn	22	0021:41	65.2
18007 Bbn	23	0115:58	78.8
18019 Abn	24	0015:19	63.6
18032 Bbn	25	0109:36	77.2
18044 Bbn	26	0008:57	62.1
18057 Abn	27	0103:14	75.7
18069 Bbn	28	0002:35	60.5
18082 Bbn	29	0056:52	74.1
18095 Abn	30	0151:09	87.7
18107 Bbn	31	0050:30	72.5

Oscar 8 Orbital Information

Orbit	Date (Oct)	Time (GMT)	Longitude of Eq. Crossing °W
2920 Jbn	1	0104:13	57.0
2934 Abn	2	0109:25	58.3
2948 Abn	3	0114:37	59.6
2962 X	4	0119:49	60.9
2976 Abn	5	0125:01	62.2
2990 Abn	6	0130:13	63.6
3004 Jbn	7	0135:24	64.9
3018 Jbn	8	0140:36	66.2
3031 Abn	9	0002:35	41.7
3045 Abn	10	0007:46	43.0
3059 X	11	0012:58	44.3
3073 Abn	12	0018:10	45.6
3087 Abn	13	0023:22	46.9
3101 Jbn	14	0028:34	48.2
3115 Jbn	15	0033:45	49.6
3129 Abn	16	0038:57	50.9
3143 Abn	17	0044:09	52.2
3157 X	18	0049:21	53.5
3171 Abn	19	0054:32	54.8
3185 Abn	20	0059:44	56.1
3199 Jbn	21	0104:56	57.4
3213 Jbn	22	0110:08	58.7
3227 Abn	23	0115:19	60.1
3241 Abn	24	0120:31	61.4
3255 X	25	0125:43	62.7
3269 Abn	26	0130:54	64.0
3283 Abn	27	0136:06	65.3
3297 Jbn	28	0141:17	66.6
3310 Jbn	29	0003:15	42.1
3324 Abn	30	0008:27	43.4
3338 Abn	31	0013:38	44.7

Alexander MacLean WA2SUT/NNN0ZVB
18 Indian Spring Trail
Denville NJ 07834

The Long-Term Effects of Working with ICs

—learn the five warning signs

I am writing about a little known and understood illness that could affect almost any ham. The profile is drawn from the experiences of many amateurs.

The conversations were taped over a period of time and wherever possible their own words will be used.

Q. How did you get started with ICs?

A. I didn't at first. It happened so slowly that I didn't notice until it was too late.

Q. Can you tell me in your own words how it happened?

A. It began years ago. The magazines started talking about something called state of the art which had something to do with solid state.

There weren't any more articles about using the type 30 tube. There hadn't been in years. I was getting to feel more and more alienated.

It wasn't so bad when they just added a few more elements to the tubes. I could understand that. Even tried a few, but I don't like them as well as the 30. No class.

All of a sudden I found that I was far behind the field. Even the schematics were funny looking. Then, in the early sixties, it happened.

Q. What happened?

A. The nuvistor tube came out. It was a dinky little thing, only a thumbnail big, but it was a triode. I could dig it. After all that transistor stuff, I could work with something they said was state of the art.

First thing, of course, I hooked it up to a decent circuit, a regenerative receiver. That really separates the tubes from the transistors.

It worked. It broke my heart, but it worked better than the 30. Had more gain and sensitivity. They finally came up with a decent modern tube.

I guess losing the 30 was what really broke me loose. It shook the foundation of my electron theory. But at least I was riding the crest. I was state of the art.

Just as I was getting the hang of working with them and getting to understand the funny new symbols and the articles about them (it was less than a year), the field-effect transistor hit.

Man, what a wallop! The nuvistor went down like it had been shot. There were no more articles about them or projects using them. It had become an un-tube.

Now everything was FETs. This was a new kind of transistor. "The transistor that thinks it's a tube," it was called.

All transistors had delusions of grandeur then. You have to understand the time. Then, it was said that transistors never went bad. They either worked or they didn't. There was no talk then of base-emitter leakage or anything like that.

Well, anyway, it was just a slight jump from the nuvistor to the field-effect transistor. I hardly noticed it at the time.

I got to work building little circuits with the FETs. Nothing too fancy, just some oscillators and a few little amplifiers.

I hardly got my feet on the ground when the first of the ICs hit. I just wasn't expecting that. I wasn't prepared. All of a sudden everything was back to transistors and ICs.

There was no in between. No more nuvistors and only a few FETs. Even they were becoming an endangered species. I guess that's when it all began to come apart.

Q. What happened then?

A. Nothing right at first. I just hung in there and waited for it to go away. Only it didn't go away. It got worse. Much worse. Whole projects were coming out with nothing but ICs in them.

That's when I started popping bipolars. Nothing fancy, just some of the old stuff. A few 2N404s once in a while. I'd throw a few on the bench and whip up some little audio circuit or other.

Well, it didn't take long. Pretty soon I was into the heavy stuff. I'd be popping some power jobs, 2N3055s or something like that.

I'd be hanging bipolars together until I had the whole circuit strung out. I'd really hit the electronic pits.

Q. What happened then?

A. Then someone I knew got me turned on to digital. He told me that they were really easy to work with. Just string them together. It's so easy.

I started out with the 7400s. A few little circuits and then I learned about some of the higher 7400s, the counters and decoders.

Once I got switched onto digital, I had to keep looking for bigger kicks. That's when I hit onto linear.

It was the regulators that made it sound so innocent.

Just one IC and a few caps and you got regulated output. Do you know what easy regulated voltage does to an old-time tube man?

Then that insidious name. Linear. I had to find out why it was called linear. I found out; there was lots of stuff that wasn't digital.

All those seductive amplifiers. Whole audio sections that would just plug in with a few extra parts. It was so easy to fall into the trap.

I can still remember the thrill, but it seems so long in the past now, when an evening could be happily spent in building and debugging an audio section.

It called for experience and craftsmanship. You could see the filaments light up and almost feel the signal flowing through the circuit.

Now you just plug in a little plastic thing and it's done. There's no room left for skill . . . or pride. You get lazy and take any cheap plastic electronic pill.

Now you have to keep looking for more to do with them. Something to give you back a feeling of electronic self. You buy more and more of them. You get bigger and more complex ICs, looking for the ultimate IC high.

I'm an addict. I know that now. I didn't know what those first few transistors would do to me. I thought I could just take a few now and then.

I thought I would still be in control and I could stop any time I wanted. It's too late for me now. I just hope I can keep the kids from becoming hooked.

Q. Do you think that is going to be much of a problem?

A. Oh, yes. The stuff is all around them. The magazines are full of articles describing the joys of this new electronic kick.

The ads are full of the paraphernalia. Power supplies, miniature components, IC boards, and test gear. The ICs are shown at prices that are almost a giveaway.

Any kid on the street knows the local pushers who have this material available just by walking right in off the street.

It's legal. They can sell this stuff to the unsuspecting kids and the law can't touch them. The only way to fight it is with public awareness of the problem . . .

This story is not unique. Many amateurs have become IC addicts. But there are signs that can be recognized by the families or friends of any ham.

1. One early sign is that the victim starts popping ICs. This is easy to spot. They make a distinctive sound when they crunch. Often the victim will sprinkle ICs on top of his favorite breakfast cereal.

2. Another sign is Widget Fidgets. This is an electronic form of delirium tremens caused by trying to work with components far too small for human beings.

3. Every now and then you may find the victim reading a copy of *73* hidden behind another magazine such as *Playboy* or *Field and Stream.*

4. Certain words may creep into his vocabulary, words like mini-DIP, fanout, and nanosecond.

5. Another sure tip-off is that the victim can often be found sitting alone in a darkened room, chanting Ohm's Law over and over.

By the time it has progressed this far, the victim may even be a pusher, writing articles for the magazines and getting others hooked, to pay for his habit.

There is no known cure for IC addiction and treatment is not generally available. If the disease has progressed far, there is little hope.

All you can do is keep the victim comfortable and hope that he never discovers microprocessors. ■

The Lady Saw Red

—if the shoe fits . . .

James C. Grady WB4ZVZ
PO Box 158
Kenly NC 27542

I guess the antenna on my chimney attracted him. At any rate, he telephoned saying he wanted to come look in my shack as he was getting interested in amateur radio. I urged him to come and bring his XYL. Perhaps he and I could sell her on it, too. That would be better than having her hostile while he tried to get going.

They came on the double. I barely had time to make the shack semi-presentable before they walked in. She gave the cold-fish eye to the disorder almost before she got inside. We sat down, talked for a few minutes, and I learned that it was my four-element, two meter beam that had caught their attention. It was so much less obtrusive than their neighbor's moonraker. The lady was obviously attuned to the exterior appearance of her home. It was then that I made the fatal mistake. I switched on my rig to give them a demonstration of the fun benefits of two meters without first laying the groundwork.

A voice erupted from my little three-inch speaker: "Break, break." I saw the lady wince and realized immediately that she had heard that kind of squawk from her neighbor's chicken rig. Then came a garbled slur of letters and numbers. The identification process was wasted on us. Nobody could have copied it, even with long experience.

Then another station in the group answered promptly, adding, "Got no time fer yew, Mac. XYL sez I gotta clean up this QTH pronto!"

"What's XYL?" the lady asked. "And what's QTH? Why do they speak in riddles? I don't understand. It's jargon."

I explained that XYL meant wife.

"Then why didn't he say wife instead of XYL?" she asked. "Wife is easier to say and easier to understand, too."

I told her that symbols were devised for telegraphy to make transmission faster and easier and that this bird's use of XYL on the phone was simply a carryover from brass pounder's language.

"But he's not using Morse code," she retorted hotly. "XYL is more difficult to pronounce and has no meaning except to you amateurs. Was he trying to prevent uninitiated listeners from knowing what he was talking about?"

I continued the soothing effort although I could plainly see I was making no headway whatever.

"And why did he use QTH? What in heaven's name does that mean?" she demanded. At that same instant the almost unintelligible voice slurred out, "Home QTH." The lady almost vaulted from her chair.

I explained that QTH meant home, but the lady was more agitated and distraught then ever.

"Then why did he use QTH when he had already said 'home'? That's the same as saying 'home home' and that's even worse than a double negative. Do all of you amateurs talk that way? Aren't you capable of understanding and speaking the English language?"

I was getting nowhere in a hurry. The lady's faint-hearted husband squirmed in his chair but did not muster the courage to say anything. There was no way for me to help him unless I came up with something and fast. And it was easy to see why they were considering amateur radio. It is a hobby that a man can enjoy without being let out of the house. Just then a voice on the radio answered the garbled one. "Roger Dodger, old man. We're about to destinate."

That did it. The lady exploded belligerently. "What is that moron about to design?"

I sat there with a dumb, blank expression, not because I adopted it, but because I couldn't help it. I just plain

didn't know what she was talking about.

Then she let me know. "Webster defines destinate as to design or appoint. At best, it is an extremely ill-chosen word. It does not mean 'to arrive.' I can see that all of you amateurs desperately need language training. What a pity you don't spend some of your study time learning to communicate with proper English rather than simply learning to use pig grunts and squeals. Your mastery of technology is of little use if you cannot transfer intelligence. It's no wonder that others are after the frequencies you enjoy. They might well make better use of them."

That last sentence really hurt. It cast a new dimension on her diatribe, but she did have a point. I explained that the language we use is the same used by amateurs all over the world, that all of us understand it, that we can't all talk like Harvard PHDs. I was pouring on the logic and the humility and thought I was finally making some headway when the term "QSYing to five-two" broke into the shack. The lady boiled over again.

"What does that nonsense mean?" she demanded. "Couldn't it be expressed so everyone can understand or has it some meaning that is subversive or maybe vulgar?"

This was her most vicious parry yet, so I explained that it meant only a frequency change. She seemed to accept this, but I could see that she was not impressed. Then there was a distorted slurring noise by the drooling ham and more pointless drivel ending with a shouted "73."

Her dander rose again. "What does 73 mean?" she almost shouted. "He has again obviated sensible communication. Couldn't he say whatever he means and quit this insane code practice?"

I could see that the meek one's chance of ever passing Uncle Charlie's exam or owning a rig were running down the drainpipe. No doubt about who was head of their household. Oh well, there is always stamp collecting for his type. Then I explained that 73 means "best regards," but by this time I was unable to convince even myself that hams are either articulate or wise.

"73 has four syllables," she shot back. "Best regards has three syllables. Where is the saving? Your system substitutes mumbo-jumbo for simple words. It adds time and complication. It defies understanding. It makes your messages almost totally senseless for non-hams and convinces everyone that you already have more frequencies at your disposal than you deserve. You're no better than chicken banders and we have far too many of them already. Horace will be better off to forget this silly diversion. You can bet I'll see to that."

"Yes ma'am," I answered passively, "I'm sure you will." The lady led her silent husband out of my shack.

After they had gone, I sat down to think seriously about the route that we are traveling and came to the conclusion that the lady did have some logic on her side. And this winter I'm going to enroll in a college course in English instead of the club's upgrading course. So, in the future, if you hear me on two meters, or 10, or 15, or wherever, utter any of these things I've told you about, or use shout for call, or we for I, or affirmative for yes, or negatory for no, or I know wotcha mean, or real fine, please call my attention to my oversight. I'm trying to do a public relations job for amateur radio by upgrading my conversation. I hope I won't be entirely alone.

And I count myself lucky with the lady. She never even mentioned "Roger Dodger." ■

Karl T. Thurber, Jr. W8FX/4
631 N. Overbrook Dr.
Ft. Walton Beach FL 32548

The Frugal Alternative

—home-brew an HT charger

Having a set of dead nicads in your HT is no fun—especially when you really need them! If you find yourself in this situation and haven't bought your handie-talkie complete with charging base at the outset, chances are good that you will want to purchase one in the very near future. The Wilson HT's charging posts, which are recessed into the battery slide tray on the underside of the unit, make it very difficult to charge the unit without one.

Custom charger bases, accessories designed to service a specific manufacturer's HT, are expensive. There are ways to charge the Wilson 1402SM and other similar units having tray-mounted charging terminals, though doing so takes a bit of ingenuity.

I've experimented with a number of alternatives to charging my unit, including removing the battery tray from the case and charging it separately. Most of the approaches I tried were rather cumbersome. I've found the simplest approach to recharging the 12-volt pack to involve no more than an inexpensive CB-type handheld recharger and a junked commercial charging base. Here's how it's done:

Purchase a Radio Shack #21-516, or similar nicad charger, of the type used to charge their line of 12-volt CB hand-helds. The battery packs of these units are electrically similar to the Wilson's, though they are mechanically very different. Both use 10 series-connected AA-size nicads, each having an open-circuit voltage of 1.2 to 1.25 volts, to produce a supply voltage of 12 to 12.5 volts. This charger, which resembles an ordinary transistor radio ac adapter or battery eliminator, has a stated output voltage of 17.4 V dc as indicated on its case. Don't worry about this. It won't harm the nicads, as the voltage tapers off as the cells charge, and the charging rate is limited to 40 or 50 mA.

As supplied, the charger comes with a cord which is terminated in a standard "inverted" dc power plug. This is a standard charging and power plug, and it is intended to plug directly into any of the Radio Shack CB hand-helds' charging jacks. To use the charger with the Wilson or similar HT is more of a mechanical problem than an electrical one. You need to scout out a junked commercial charging base for any kind of radio pager, monitor, pocket scanner, or small HT. We're not looking for a good *charger*, just the *base* that can be modified to physically support the Wilson and provide a means of feeding it the charger's output. I located a defunct "Page-ette" base (used to recharge a small pocket-radio pager) at a local hamfest for all of $2.50, purchased on an as-is basis. Other possible sources for these units, other than the flea-market circuit, are local fire and police departments, two-way radio repair shops, and other commercial users. They may have unrepairable or obsolete bases lying around either free for the asking or which can be obtained for a very small sum. Use your scrounging skills here! One word of caution, however: If you should find a charger base that appears to be intact electrically and you want to use it *directly* to charge your unit, be *sure* to check out the charging voltage and current. Many of these units are low-voltage, high-current types, which would not be suitable for charging the Wilson, even if it might fit snugly. Using such a base might even damage your HT or battery pack, as well.

In any case, the charger base you locate will almost

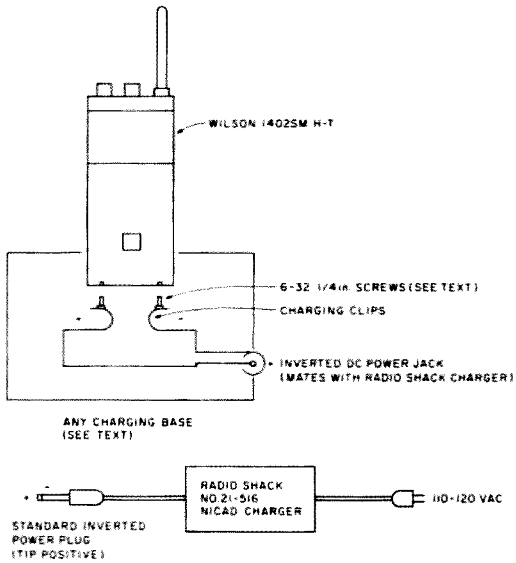

Fig. 1. Charging system shown above provides an inexpensive means of charging the Wilson 1402SM and similar handie-talkies that are charged by means of terminals recessed in the battery pack. An old, defunct charger base is modified to accept the Wilson and provides mechanical support while charging.

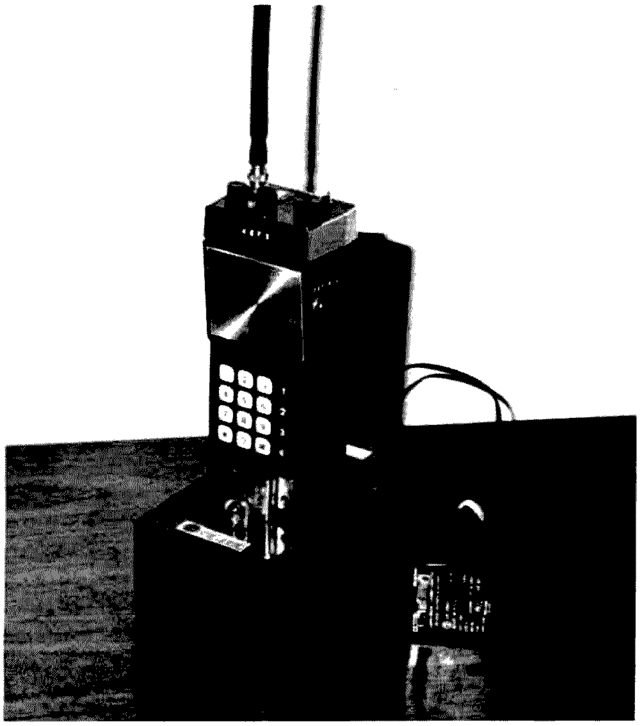

Photo A. Wilson 1402SM HT is shown in the charge position, ready to be charged up from the small CB-type battery charger.

Photo B. HT is shown in the non-charging reclining position. Once charging is complete, the unit can be disconnected from the charger and is ready to operate portable or fixed-base as shown in the photo.

certainly not accommodate the Wilson without modification to the base. You will find that the Wilson is a physically large HT (at least the 1402SM is), and is much larger than most pagers and commercial units. So, the base must be modified to accept it. To do this, first remove the plastic sleeve generally used to hold the pager or HT securely in place atop the charger base. It can be discarded, as it won't fit the Wilson. Next, carefully file the rectangular opening in the base until the Wilson can be freely inserted without undue binding. Be sure, however, not to make the hole too large, which would allow excessive slippage when the unit is inserted (it won't have the support of the sleeve, which has been discarded).

Next, install a chassis-mount "inverted" dc power jack on the rear of the base to accept the plug on the Radio Shack charger. These jacks, despite their strange name, are standard items and can be obtained from Radio Shack, Olson Electronics, Burstein-Applebee, and most other mail-order stores. Remove or disconnect the existing charger wiring – you won't be needing it. Route the leads from the jack to the base's charging clips, being especially careful to observe correct polarity. The tip on the charging plug is positive and the shell is negative. Wiring is shown in Fig. 1. Note that on the Wilson 1402SM HT, when looking at the unit from the *front*, the *positive* terminal is on the *left*, while the *negative* terminal is on the *right*. Failure to observe correct polarity is guaranteed to be an expensive mistake!

You're almost finished, but getting a good, solid connection to the recessed charging terminals on the Wilson can be a bit tricky. Usually, a very short (¼" or less) 6-32 screw, soldered upside down to the top of the base's charger clip, will do the trick and make good contact with the Wilson's terminals. In some cases, a "pointed" solder blob on each clip will be what is needed to make good continuous contact when the HT is inserted and standing vertically in the charger (Photo A). You will, of course, have to inspect your charger base to determine what kind of clips it uses and what must be done to accept the Wilson or whatever HT you want to use with it. Usually, modifying and adjusting the clips is no problem, but it takes a little patience to get the HT to seat just right.

The Radio Shack charger I used will fully charge the nicad pack in about 12 to 14 hours. Although it can be left connected to the HT's terminals, it's best to disconnect it to prevent any possibility of overcharging the cells and to eliminate any possibility of fire from overheating or failure of the charger unit. This can be done very simply by unplugging the charger from the ac outlet, removing the Wilson, and reinserting it so that it's no longer resting directly on the charger clips, but, rather, is reclining on the charger base at a 45-degree angle so that charging current cannot flow to the terminals. This position also makes for a dandy fixed-base operating position for the HT (Photo B).

While the best charging philosophy to follow is a highly-charged subject (pun intended), I believe that you can help ensure maximum battery life by recycling the nicads three or four times a year. This means letting the batteries discharge completely before recharging them. Doing this tends to inhibit "plating" which reduces the batteries' efficiency. By exercising a little care in charging (not overcharging and not charging in too many short spurts), you should get well over a thousand charge cycles from a set. Be sure, when charging, that *each* of the ten nicads in your battery tray is a good one, and that each is seated properly so that the charging current flows through it in the right direction.

Who says you can't charge up a Wilson on a budget? ■

PLL Techniques

—a practical guide

Lester A. Earnshaw
PO Box 1584
Sedona AZ 86336

Recently, I had occasion to work on several different phase locked loop systems. One system was relatively straightforward, but two of the systems had to utilize a heterodyning process, and these proved to be anything but straightforward. More recently, I came across a statement made by a Mr. R. E. Funk of RCA (*COS/MOS Digital Integrated Circuits*, Solid State Handbook SSD-203B, page 460). Mr. Funk says: "The disadvantage of the heterodyne technique is that, because a second reference crystal and a mixer are needed, the designer may be afforded an unsought opportunity to demonstrate his process in eliminating spurious beat and sum frequencies." This is the understatement of the year! But Mr. Funk certainly knew what he was talking about.

The purpose of this article is to share some of my experiences. There is a definite shortage of practical phase locked loop material. The publication just mentioned and the *Phase Locked Loop Systems Data Book* put out by Motorola contain practically all the useful data I could find. I recommend that the serious experimenter obtain these publications.

There have been various ham articles on phase locked loop systems, but these have been somewhat limited in content and spread over a number of publications. I propose, therefore, for the purpose of completeness, to begin at the beginning and build up to a practical system. Hopefully, this discussion on the various pitfalls will save you a few headaches and frustrations!

First of all, you may ask, "Why do I want a phase locked loop system at all? What is the advantage of it?" To answer this, it is necessary to discuss the shortcomings of some other systems. For example, an FM transmitter may generate the FM at a low frequency, 3 MHz being typical, and double and triple many times until the desired output frequency is obtained. This is fine, except for one thing – the output of the transmitter may contain many spurious signals such as 6 MHz, 9 MHz, 12 MHz, and so on. This is the reason the 2 meter transmitter contains so many tuned circuits – regulations and good practice say that these products must be kept at home.

In many cases, it is necessary to obtain a local oscillator injection voltage that is too high in frequency for a stable vfo. The usual method is that a low-frequency vfo is mixed with a higher-frequency crystal oscillator output, and the sum or the difference product is utilized. But this method also provides a lot of spurious outputs, and, unless the mixer output is adequately filtered, it will result in the reception of all sorts of unwanted signals. As an example, a 5 MHz vfo may be mixed with a 33 MHz crystal in order to obtain a 38 MHz local oscillator signal which, when used with a 12 MHz i-f, will allow 50 MHz operation. In this instance, the sum product has been used, but there is also a difference product. 33 MHz less the vfo frequency of 5 MHz equals 28 MHz. Unless this signal is properly filtered, you might find 40 MHz commercial stations coming through in addition to the 6 meter signals. To make matters worse, harmonics of the vfo will also be present in the local oscillator chain output, one of which will be 40 MHz, only 2 MHz away from your wanted output.

Now, in the case of the FM transmitter mentioned earlier and in the local oscillator system just described, an oscillator operating right at the output frequency would eliminate the need for multiple tuned circuits and elaborate filters, because a properly designed oscillator will be free of all spurious signals except harmonics, and, usually, these are sufficiently removed in frequency not to be troublesome. Unfortunately, unless it is possible to lock the high-frequency oscillator to a stable source, you will have traded a spurious signal problem for a frequency stability problem. This is where the phase locked loop enters the picture. The system allows the high-frequency oscillator to be locked to a stable source. If crystal control is required, a 154 MHz oscillator, for example, may be locked to a 1 MHz or a 10 MHz crystal oscillator. However, to supply many different local oscillator frequencies, many crystals must be used or, alternatively, a synthesizer inserted into the circuit (more on this later).

The local oscillator or the FM transmitter may also be locked to a lower frequency vfo. But, before I discuss this, refer to Fig. 1, and see how a vfo may be locked to a crystal. Incidentally, when a vfo is locked in this manner, it is called a vco – voltage controlled oscillator. Referring to Fig. 1, the vco feeds output into a kind of mixer which is usually termed a phase detector (0 detector). Actually, many phase detectors are simple mixers. At the same time, the crystal oscil-

lator, which is now called the reference oscillator or sometimes the clock, also feeds output to the mixer or phase detector. When there is a difference in frequency between the two input signals, certain mixers will deliver a dc output which is either negative or positive in polarity, but will have no output if the two input frequencies (and phase) are the same. It is this + or - output voltage which distinguishes a phase detector from a simple mixer. The dc output from the phase detector may now be used to change the capacitance of a variable-capacitance diode which is part of the vco tuned circuit and thus vary the vco output frequency. If the circuit is properly designed, the dc voltage (usually known as the control or error voltage) will move the vco frequency toward the reference frequency. When the two frequencies are the same, there will be no error voltage, and the vco frequency will stabilize. If the vco moves higher in frequency, the phase detector will deliver a + error voltage, which will increase the diode capacitance and lower the frequency. Conversely, if the vco drifts lower in frequency, a negative error voltage will move the vco higher. Thus the vco is locked to the crystal.

Of course, there is little advantage in using the simple circuit just described. It would be simpler to use the crystal oscillator directly. However, the circuit does illustrate the principle. What if the reference oscillator was "dirty," that is, it contained a number of unwanted spurious products? Well, just what we would like to happen would: The vco would clean up the signal. Because the vco is in itself a sine wave oscillator, kept on frequency only by occasional squirts of dc, it should have pure output. In practice, this is not always the case, but a properly designed system will certainly reduce spurious signals, usually to an acceptable level.

Incidentally, the vco may also be a multivibrator type, delivering square wave output. The type I propose to discuss, because it may be used with SSB receiving and transmitting equipment and thus must contain little phase jitter, will be the sine wave generator.

The block diagram shown in Fig. 2 illustrates a scheme utilized in many modern CB sets where, because of the large number of crystals required to give complete channel coverage, a system that mixes a smaller number of crystals is preferred. The outputs of oscillators #1 and #2 are fed into a conventional mixer. Either the sum or the difference product is selected, whichever is convenient, and the resultant product is fed to the phase detector. Of course, a double-balanced-type mixer has to be used here to suppress the two original frequencies, otherwise the vco will not know which signal to lock to. However, a "dirty" signal has now been made clean.

Although Fig. 2 is a practical system used by many manufacturers, it still requires something like 11 crystals in the case of a 23-channel CB set. Generally speaking, crystals are a nightmare of supply problems to most manufacturers of original equipment. Fortunately, there is another way. Referring again to Fig. 1, let's say that in some mysterious manner we are able to "rubber" the crystal 1 MHz higher in frequency. What will happen to the vco? It will follow right along and stay locked to the reference. So the problem really is how to "rubber" the crystal to where we would like it.

Referring now to Fig. 3, it will be seen that a new building block has been added between the vco and the phase detector which is labeled divide-by-N. For the moment, let's have N = 2. A simple flip-flop, costing less than 50 cents, will fill this

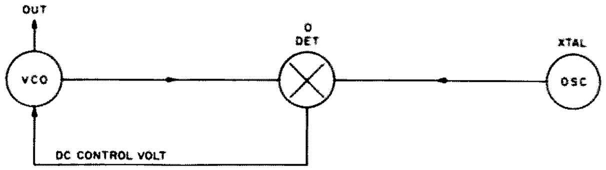

Fig. 1. This block diagram shows how a vfo may be locked to a crystal oscillator. Both the vfo (herein called a vco) and the crystal oscillator feed signal to the phase detector. The phase detector generates a dc voltage which "steers" the vco on to frequency whenever there is a difference in frequency between the two oscillators.

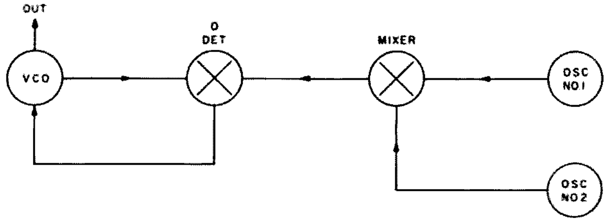

Fig. 2. When a high-frequency local oscillator is required, a vfo (osc. 1) may be mixed with a crystal oscillator (osc. 2) to obtain the necessary high-frequency output. This signal will contain many unwanted spurious outputs. However, if the "dirty" signal is only used to lock the vco, the unwanted products will be filtered out.

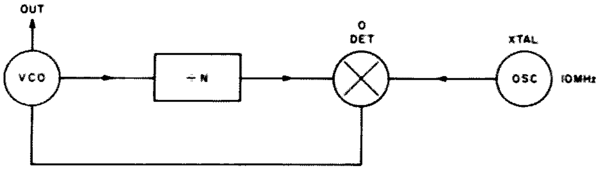

Fig. 3. In this system, unlike that shown in Fig. 1, the vco may operate on a different frequency from the crystal. For example, if the ÷N = 2, the vco may operate at 20 MHz. See the text for more on this.

block. Because the output of the vco is connected to the flip-flop input, the vco output is divided by two, and the result is given to the phase detector. The block diagram shows that in this instance the reference frequency is 10 MHz. Had the vco been generating a signal around 10 MHz, the vco would divide this by two and feed a 5 MHz signal to the phase detector. Because the 10 MHz reference signal is considerably different in frequency from the 5 MHz received at the input port, a large error voltage will be produced, and the vco will be retuned until both ports receive 10 MHz signals. This means that the vco will now be delivering output at 20 MHz. If we add a second flip-flop in tandem with the first so that N = 4, the vco will move to 40 MHz in order to reach lock. Thus, merely by changing the value of N, a number of vfo frequencies may be obtained which are all locked to the reference frequency. The manufacturers of integrated circuits have come to our aid with a number of inexpensive flip-flops in one package. The package may readily be programmed to give a number of division ratios. For example, the RCA CD4018 will divide by any number between 2 and 10. When a number of counters are combined in this manner, the simple flip-flop counter becomes a synthesizer.

Referring again to Fig. 3,

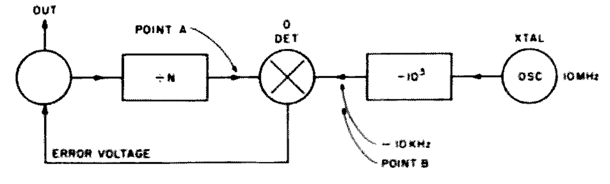

Fig. 4. The system shown in Fig. 3 allowed the vco to move only in 10 MHz steps. By dividing the reference oscillator down to a lower figure (for example, 10 kHz, point B), then the vco may supply outputs only 10 kHz apart.

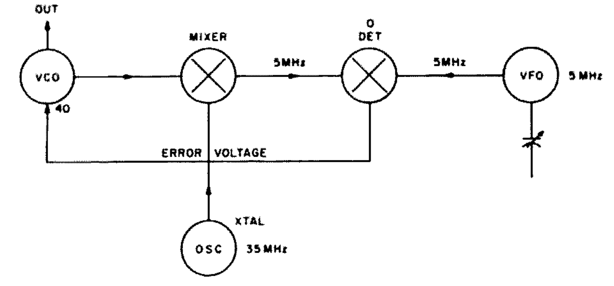

Fig. 5. In this scheme, the vco is heterodyned against a crystal oscillator to produce a difference signal in the same frequency range as the vfo. When both the heterodyned output and the vfo output are fed to the phase detector, the vco will lock to the vfo and have the same stability.

it will be seen that the vco output can only move in 10 MHz steps, because you are only able to divide by whole numbers. However, it will be readily seen that, if the reference frequency is lowered to 1 MHz, the vco will move in 1 MHz steps. Thus, if a 10 kHz channel spacing is required, the reference frequency must be 10 kHz. A 10 kHz crystal is kind of expensive, but, fortunately, you can retain your 10 MHz or 1 MHz crystal and simply divide it down by using a number of inexpensive flip-flops. A few type-7490 ICs will do this job for less than a dollar. This scheme is shown in Fig. 4. Input to the phase detector at point A in Fig. 4 will not always be 10 kHz, but it will always be 10 kHz when the system is in lock. When there is an 11 MHz signal at point A, an error voltage will immediately develop and, regardless of the value of N, will move the vco frequency until 10 kHz appears at point A.

In the above explanations, it was said that only a dc error voltage was obtained from the phase detector, but this is not always the case. The RCA CD4046 phase detector does give a fairly clean dc signal, but the output still requires some filtering. Some phase detectors, such as the Motorola MC4044, deliver a series of pulses at the output terminal, and the output may require considerable filtering. Each type of phase detector has its particular usages. Currently, I am using both types in newly-designed equipment. The divide-by-N part of the circuit is beyond the scope of this article.

The systems outlined above have one serious disadvantage. While they operate well if fixed-channel operation is required, such as is used in the 2 meter band, they do not lend themselves to the sweeping or the searching across the spectrum. To properly tune SSB, one must be able to tune to within 10 Hz, not 10 kHz. To find a buddy due to come up somewhere between 14230 and 14250 requires a vfo knob, not a number of synthesizer knobs. At first throught, it would seem that the simple answer is to replace the reference oscillator with a vfo. I wish it was that easy. Unfortunately, this scheme suffers from the same disadvantage you have when a vco is multiplied to obtain a higher local oscillator frequency; the frequency instability is multiplied by the same factor.

In our case, if the divide-by-N = 8, the frequency instability of the vfo will also be multiplied by eight. What was a 100 Hz drift per hour now becomes an 800 Hz drift per hour! Additionally, each time the divide rate is altered, not only does the frequency drift rate change accordingly, so does the amount of frequency covered by the dial. This makes for difficult dial calibration unless a digital readout is used.

The Heterodyning Method

Just as you can heterodyne a vfo to a new frequency by beating it against a crystal oscillator, so you use this technique in the phase locked loop system. The basic scheme is shown in Fig. 5. In this example, a 40 MHz local oscillator is required for a 6 meter receiver. Output from the 40 MHz vco is fed into an ordinary mixer together with signal from a 35 MHz crystal oscillator. The 5 MHz difference output from the mixer is then fed to one input port of the phase detector. Output from a 5 MHz vfo is simultaneously fed into the other inport port of the phase detector. If a difference between the two input signals exists, an error voltage is dispatched to the vco and its frequency moved until lock is obtained. When the vfo is moved, this, too, generates an error voltage, and the vco is forced to follow. If the vfo is moved 10 kHz, the vco will move 10 kHz. If the system is properly designed, the vco output will be clean and contain none of the 35 MHz component, vfo harmonics, or the like. And so it appears that the heterodyning system is the panacea to our problems, and, in some cases, this is so. However, in many other instances, the problems are just beginning.

In the example shown in Fig. 5, when it's first turned on, before lock is obtained, the vfo output frequency may be anything within the range of the system. If the phase detector output is able to vary from 0.5 volts to 4.5 volts, which is typical (with 2 volts being the nominal center frequency), the variable capacitance diode may have its capacitance changed by as much as 100 pF. This change may readily sweep the vco as much as 20 MHz before lock is obtained. If, referring to Fig. 5, perchance the vco is moved down to 30 MHz, this frequency when mixed with the 35 MHz oscillator will also produce a 5 MHz difference signal at the mixer output. Naturally, the loop will try to lock to this signal. However, as the error voltage will now be of the wrong polarity, lock will not be obtained, the phase detector will be thoroughly confused, and the vco will settle at some highly unstable frequency below 35 MHz. Fortunately, in the example given, the image is sufficiently removed in frequency from the wanted signal. The vco swing may be sufficiently restricted so that it is not capable of running into this highly dangerous area. But, in instances where the difference frequency is small, this phenomenon becomes a real and serious problem. There are various ways one may overcome this problem. One method makes use of the fact that, when the vco is tuned to the image frequency, the error voltage will become highly negative with respect to the nominal frequency (in this instance only; it may become positive in other instances). When the high negative voltage is produced, it may be caused to trigger a ramp generator which, in turn, forces the lock line in the other direction. Such circuits, in my experience, also contain numerous gremlins and tricky elves.

Another method may

make use of a tuned circuit lightly coupled to the vco tuned circuit. If the accessory tuned circuit is tuned to the dangerous frequency area, it will receive a signal when the vco is in that general area. The signal may be rectified and used to ramp the lock line.

Some phase detectors will lock to a harmonic of the wanted signal voltage. One of the phase detectors in the RCA CD4046 package (there are two) displays this annoying characteristic. It's quite disconcerting to obtain good lock, but on the wrong frequency.

Whatever the system employed, the heterodyne method almost always requires that the mixer output be filtered to eliminate the vco and crystal oscillator outputs and also the unwanted image frequency. If the difference frequency is used, a simple low-pass filter may be sufficient, but, often as not, a quite elaborate filter must be installed between the mixer and the phase detector.

And this brings us to a new problem, also quite common and often serious. If the vco is able to swing sufficiently far in one direction so that the mixer output frequency is greater than the low-pass filter cut-off frequency, the filter will prevent the signal from reaching the phase detector. The phase detector, in alarm, will send a panic voltage to the variable-capacitance diode, which, in turn, is sent even further away in frequency. The system has latched up and will stay latched until a ramp is activated or the supply voltage is removed and replaced.

From all of the above, it would seem that the easiest thing to do is to limit the vco swing so that the dangerous latch-up area cannot be entered. Indeed, this is mandatory in most cases. The vco is often preset. That is, each time the MHz bandswitch on a receiver is moved, for example, an additional diode across the vco tuned circuit has the voltage across it altered so that the vco is "steered" near the wanted frequency.

If the vco swing is too restricted, it will be found that lock will not be fully obtained near the band edges. Instead, the vco will "skip" cycles and never quite make it.

Other problems, not only peculiar to the heterodyning method, but also to the other methods outlined at the beginning of this article, are caused when the vco is allowed to swing beyond the "capture range" of the system. With each phase detector and PLL system there are extremes beyond which lock cannot be obtained; however, if they are forced into lock, lock will be maintained.

The capture range, to a major extent, is also dependent upon the loop bandwidth, which is tied up with the capture time. This is highly dependent upon the type of filtering required in the lock line. Because the error voltage to the variable-capacitance diode may contain spurious voltages, especially the reference voltage, it must be filtered. If the reference frequency is in the audio range, for example, filtering may become quite troublesome. If the filtering is inadequate, the vco signal may be modulated by the spurious components. Often, if the filtering is good, the lock-up time and thus the capture range may suffer. Filters must often be skillfully designed, and this design may well be one of the more difficult parts of the system. Capture range is exactly what it says — the frequency range over which an out-of-lock system will lock. It will be apparent that, once lock is obtained, moving the frequency of either of the oscillators at a rate slower than the time required to obtain lock will cause only a small error voltage, and correction and lock will be easily maintained. If, however, lock-up time is very slow, the error voltage change may arrive too late, and the system may drop out of lock. This is particularly true when a different crystal is switched into circuit, resulting in a large frequency shift and possibly a temporary loss of signal at the input to the phase detector. Before the error voltage can arrive, the system may have dropped out of lock and even latched up.

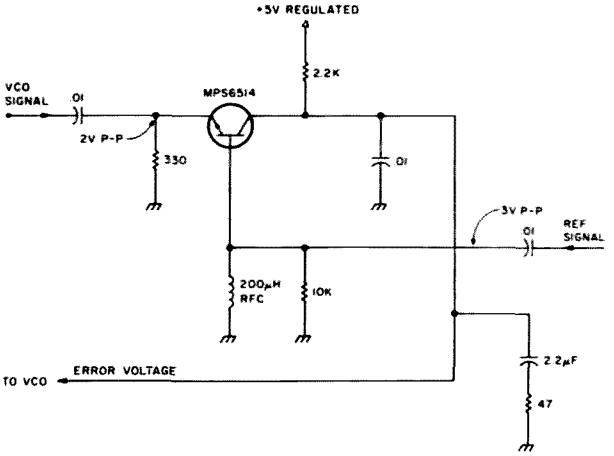

Fig. 6. A simple phase detector. This detector has poor lock capture ability. Various other phase detectors are described in the article.

Contrary to general belief, the signal to the phase detector must be fairly "clean." Some phase detectors do practically ignore spurious signals mixed with the wanted signal, but others are driven to a cantankerous behavior. The previously-mentioned CD4046 phase detector contains two different types of detectors in the one package, only one of which is affected by "dirty" signal frequencies (phase detector #2). On the other hand, phase detector #1 readily accepts signals amid static, shot noise, and other garbage, but it readily responds to harmonics. In instances where the signal is "dirty" and the system could lock to harmonics, the MC4044 has proven an excellent choice.

The #2 detector in the CD4046 package, because its output is not a series of pulses, is very readily filtered, usually only requiring a resistor and a capacitor unless the reference frequency is low. Even then, the filter network will be simple and inexpensive. Phase detector #1 and the MC4044, because they deliver a series of positive- or negative-going pulses, require much more elaborate filtering and may even require active two-step filter systems.

From reading this, it may seem that only two phase detectors are available on the market, but this is far from the case. Fig. 6 shows a simple phase detector. This type of detector is suitable for many applications, but it has a very small capture range unless ramped. The sample-and-hold-type detector has very clean output, usually utilizing two or more field effect transistors. The diode-type double-balanced mixer or modulator makes an excellent phase detector, but it has very limited capture range. The digital types, such as those mentioned earlier, because they have been especially designed for phase detector application, do make for simple detection. Unfortunately, these devices have a limited frequency of operation, especially the CD4046, which is quoted at 1.2 MHz upper frequency. The MC4404 is quoted at 8 MHz. This means that, in many circuits, both the signal and the reference frequencies must be divided lower in frequency merely to get within the operating range of the device, an unfortunate com-

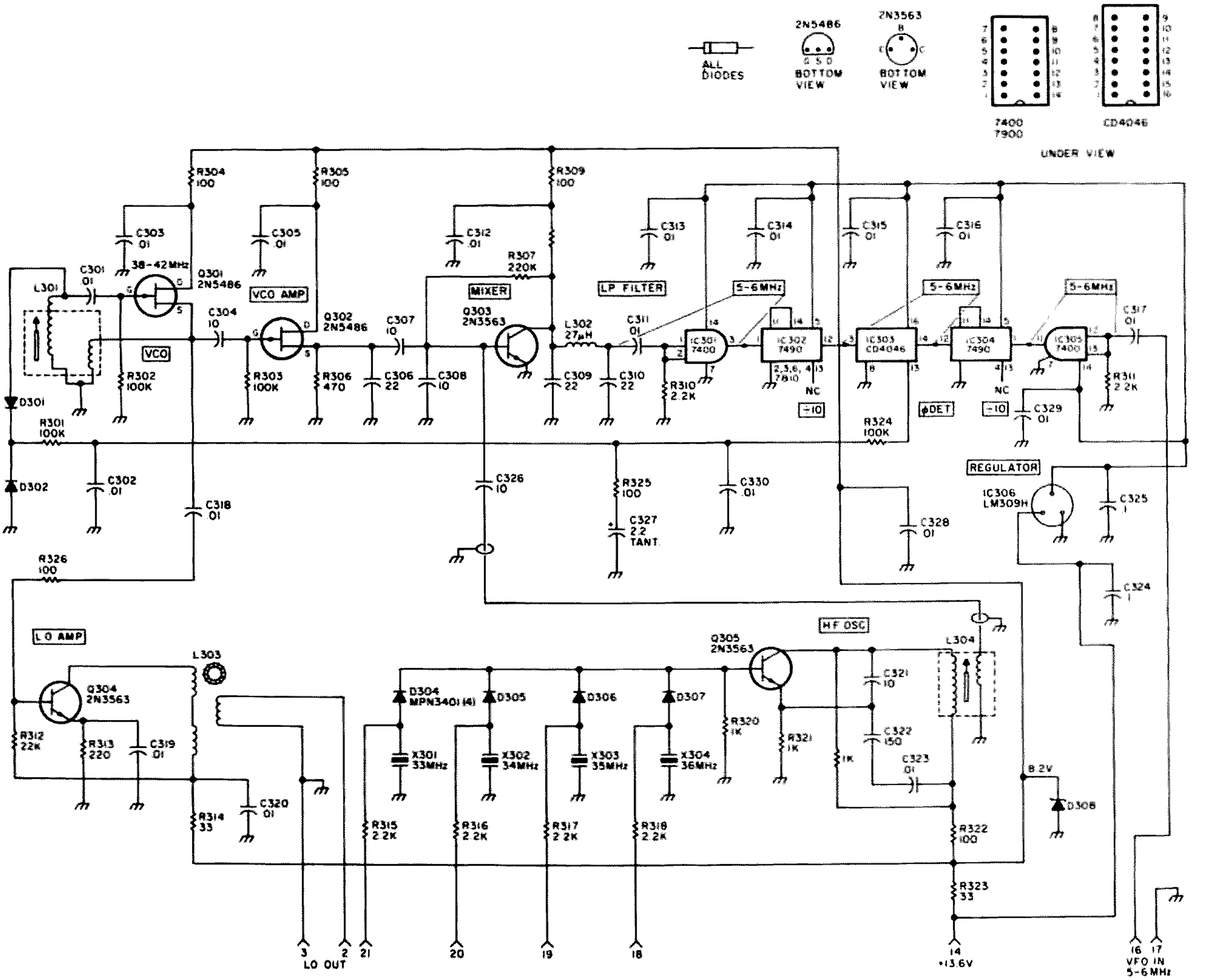

Fig. 7. The schematic diagram allows a vco covering the frequency range of 38 MHz to 42 MHz to be locked to a vfo covering the frequency range 5 MHz to 6 MHz.

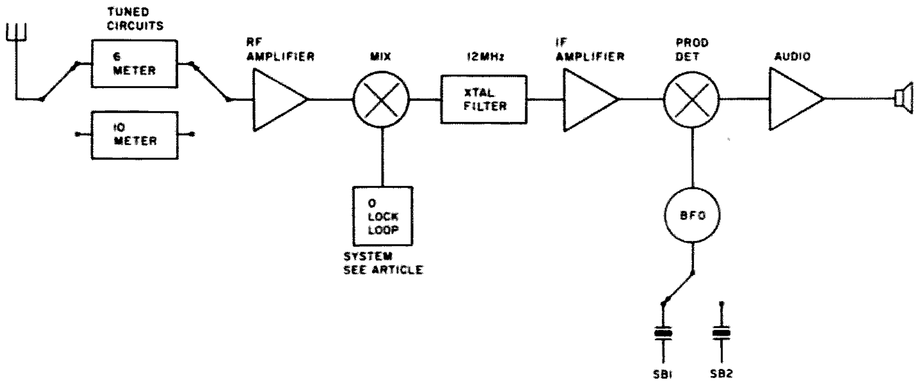

Fig. 8. The phase locked loop system shown in Fig. 7 and covered in the article may be used with a receiver which will allow operation on both the 10 and the 6 meter bands. Although the system uses a high-frequency local oscillator, the stability is equal to and determined by the vfo which operates over the frequency range 5 MHz to 6 MHz. The block diagram shows that it is only necessary to change the front-end tuned circuits to change bands.

plication.

Please note that only some of the more serious problems have been touched upon in this article. There are other problems, such as phase jitter, that space will not allow to be discussed. The more serious designer will be confronted with a host of others. This is especially true if he possesses a spectrum analyzer and can more readily see what is happening. In many ways, life before the invention of the spectrum analyzer was less hectic!

A Practical Phase Locked Loop System

The PLL system shown in schematic form (Fig. 7) is derived from the block diagram of Fig. 5. In this particular system, a vco operates over the 38 MHz to 42 MHz frequency range, allowing either 10 meter or 6 meter operation with an i-f frequency of 12 MHz. The vco, Q301, is an FET Hartley-type oscillator, the output of which is fed to an amplifier

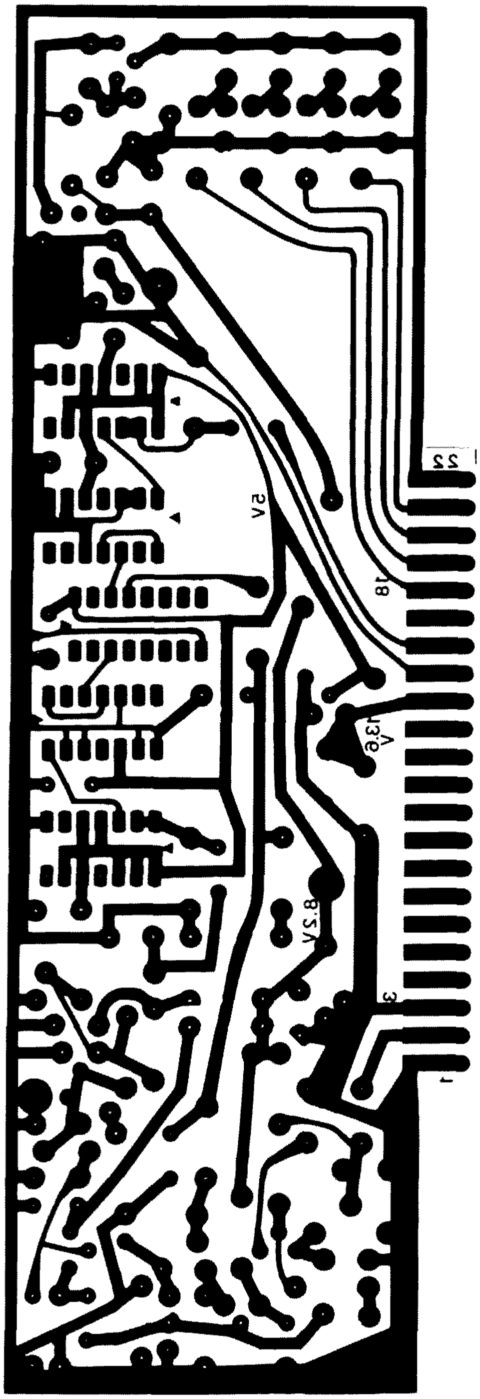

Fig. 9. PC board.

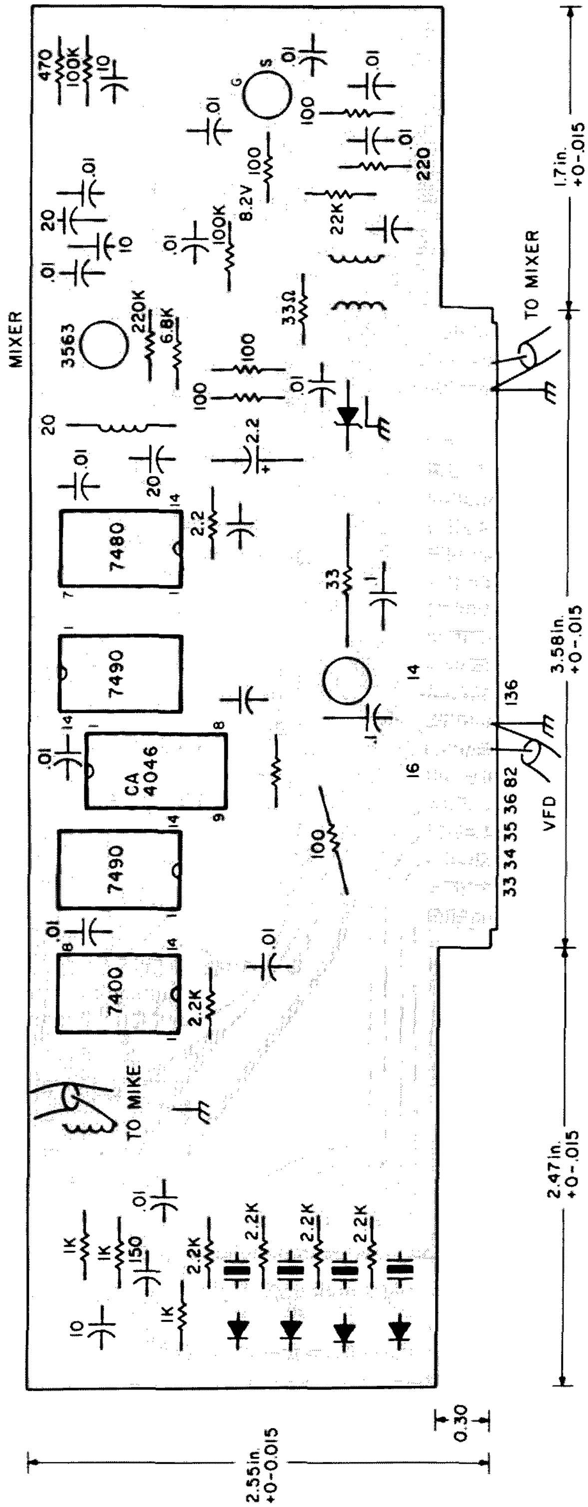

Fig. 10. Parts layout.

stage, Q304, and thence to the receiver mixer and also to vco amplifier Q302. The output from Q302 is connected to the PLL mixer, Q303. A high-frequency crystal oscillator, Q305, is operated together with one of four diode switched crystals. From 8 to 12 volts applied to one of the diodes at one time will turn on the appropriate diode. Output from the high-frequency oscillator via IFT L304 is fed to the PLL mixer, Q303.

All outputs from the mixer, except the difference between the two oscillator signals, are suppressed by C309, L302, and C310. The wanted frequency, covering the range 5 MHz to 6 MHz, is shaped and amplified by one section of a 7400 quad gate before being applied to the divide-by-10 counter. The counter is necessary because the 5 MHz to 6 MHz signal is too high for the phase detector, IC303. Thus the phase detector receives a signal in the 0.5 MHz to 0.6 MHz range.

A vfo covering the range 5 MHz to 6 MHz, delivering a

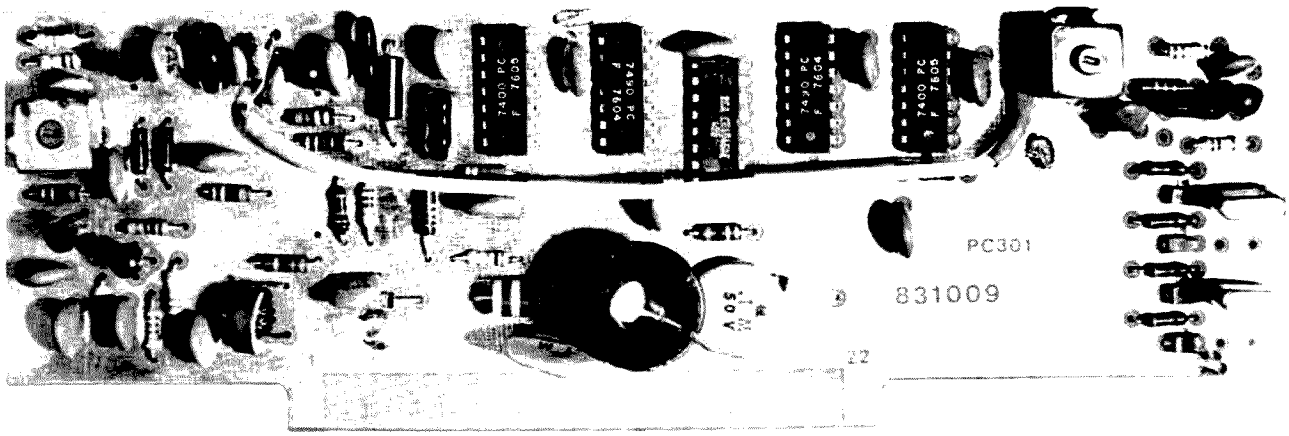

Photo A.

sine or square wave with an amplitude of at least 0.3 volts rms, is also shaped and amplified by a section of a 7400 quad gate, IC305. The output from this device is also divided by 10, and the resultant 0.5 MHz to 0.6 MHz signal is applied as the reference to the phase detector. The error voltage output from the phase detector, pin 13, is filtered by components R324, C330, R325, C327, and C302 before being applied to the variable capacitance diodes, D301 and D302. The diodes shown are somewhat expensive KV1501s, but it has been found that rectifier diodes (1N4001s) functioned quite well in this circuit. It may be necessary to select diodes, and they may be somewhat noisier (a white noise effect).

The vco coil was wound on a Micrometals form #L43-6-CT-F-5. The primary consists of 6 turns of #30 enameled wire spaced the diameter of the wire. The secondary consists of two turns wound between the turns at the bottom of the primary. It is necessary to observe the correct polarity of the windings if oscillation is to be obtained. If the Micrometals form is not available, other forms may be used. Temporarily disconnect the lock line from R301, feed 2 volts into the resistor, and adjust the coil slug until oscillation is obtained at about 40 MHz. This will get the coil into the correct range. IC306 is a three-terminal regulator which drops the supply voltage to 5 volts required by the ICs.

Transformer L304 is wound on the same form as L301. The primary consists of 12 turns of #30 closewound and the secondary of 4 turns closewound over the bottom of the primary.

To adjust the loop, first adjust L304 until reliable oscillation is obtained on all four crystals. (Note that, since Photo A was taken, the position of the crystals and diodes was reversed to obtain better operation. The schematic is correct.) While observing the output of L303 on a high-frequency oscilloscope and while measuring the frequency, adjust the slug in L301 until the voltage on the lock line is about 2 volts when the vfo is set at 5.5 MHz.

The frequency should remain stable and not move unless the vfo is moved. To check for proper operation, short the lock line to ground for a moment. The vco should immediately return to frequency.

The wideband transformer L303 is wound on an Indiana General Q1-type core and consists of 4 turns trifilar wound using #26 enameled wire. Almost any core suitable for wideband work may be used here.

The oscillator and PLL system, if used with a 12 MHz i-f, will have a "birdie" in the receiver when the vfo is at the 6 MHz part of the range. This is due to the second harmonic of the vfo falling in the i-f range. This is readily removed if the crystal and vfo are moved a few kHz to get the harmonic out of the passband.

The practical PLL system described, while not of use to everyone, has been constructed and operated in a receiver covering 6 and 10 meters. It may serve to assist others building similar equipment. Other similar systems have been designed covering a wider frequency range. In these systems, the mixer was replaced with a double-balanced type to remove the two oscillator signals. Other designers will have their own ideas on this. ■

Build A TTY Tester

—works for TTL-compatible printers, too

Louis I. Hutton K7YZZ
12235 SE 62nd Street
Bellevue WA 98006

During the construction of various interface units for my microcomputer, I found I needed some sort of self-contained device that would provide a source of Baudot TTY test signals. The unit should generate selectable characters at either a 60 or 100 wpm data rate with outputs suitable for driving a TTL or TTY loop circuit.

A search of literature on TTY test equipment turned up a unit published in *The RTTY Journal* that I decided to use as a basis for the TTY test signal generator described in this article. My unit is battery operated and provides a two-character output, switch-selected, in Baudot format (Fig. 1). The TTL output is negative going and is UART signal compatible. It is also of the same format as the Baudot TTL output signal that appears at port 2, least significant bit, of The Digital Group microcomputer when using Maxi-BASIC in the TTY hard-copy output mode.

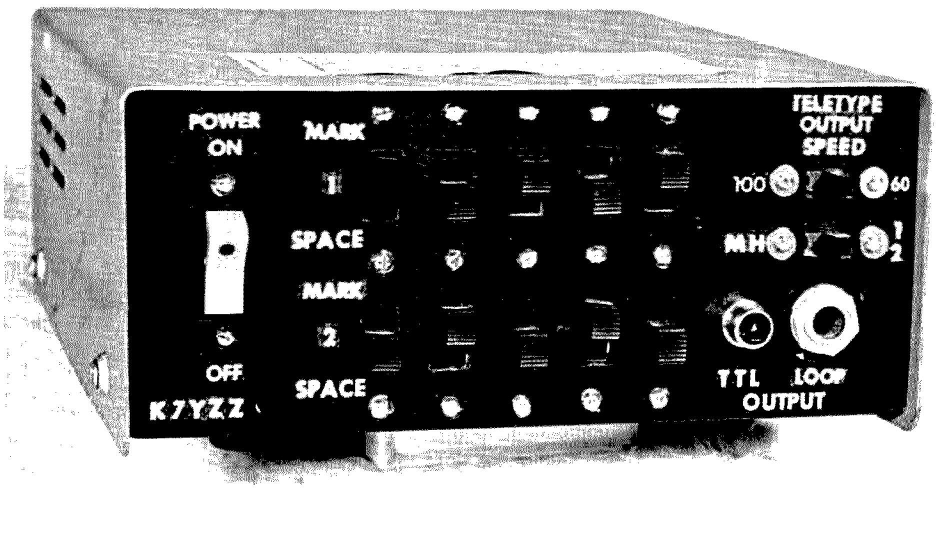

Front-panel view showing switch arrangement.

Circuit Description

The circuit consists of three integrated circuit chips and two transistors. IC1 (74122) is a clock oscillator with the timing set by the TTY output speed switch to either 60 or 100 wpm. The output of the clock oscillator is connected to the input of IC2 (7493), a binary counter. The counter provides a binary-coded sequence that is outputted to pins 8, 9, 11, and 12. This sequence is fed to the input of the multiplex switcher, IC3 (74150).

The two data-selector inputs of the 74150 are coded in Baudot format by the 10 front-panel-mounted SPDT slide switches. The multiplex switcher scans the two Baudot-coded inputs and converts the parallel inputs into a serial bit stream appearing on pin 10. This data rate is either 60 or 100 wpm depending on the setting of the output speed switch. When the mode select switch is in the mark hold (MH) position, the output of the 74150 is switched to a steady low state.

The two-character TTY serial bit stream is fed to a

buffer transistor and on to the loop driver transistor (MJE 340). A diode bridge (1N4004s) is employed for loop polarity isolation. The TTL output is taken at the output of the driver transistor. This signal is normally high, with negative-going pulses.

Construction

The ICs, transistors, diodes, capacitors, and resistors were mounted on perfboard. The leads were poked through the holes in the board and wired on the back side. Three battery holders, each holding two size AA cells, were mounted on the rear of the perfboard. The total current drain is about 70 milliamperes at 4.5 volts. No sockets were originally used with the ICs, but during testing I found my surplus 74122 was bad, and once I removed it, I installed a socket. It is strongly suggested that sockets be used on all ICs and transistors, as it will make troubleshooting much easier.

The cabinet is a Radio Shack model number 270-254, and is 6-1/4" by 2-3/4" by 7-1/4". The front panel was repainted a dull black after all the component mounting holes were drilled. The decals were then applied and the front panel was covered with two coats of clear Krylon™ spray.

A chart was prepared which identifies the Baudot code for each character to aid in setting up the 10 switches. This chart was cemented to the top of the cabinet with model airplane cement. Baudot code format may be found in the *73 RTTY Handbook*.

Testing

After all the components are mounted on the perfboard and wired, a complete point-to-point wire check should be made before the batteries are installed. The battery output should be checked to be sure it is 4.5 volts. The power can then be turned on and pin 14 of IC1, 5 of IC2, 24 of IC3, and the collector of the 2N2222 are checked for B-plus before the ICs are installed.

If the wiring and voltage checks are OK, then the ICs and transistors are installed and power is again applied. The mark space switches, rows 1 and 2, are set to the TTY R-Y code. The mode select switch is set to the 1-2 position, and the TTY output speed switch is set to 60 wpm.

Using an oscilloscope with a calibrated timebase, measure the width of a pulse in the pulse chain appearing on pin 10 of IC3. It should be 22 ms wide for the 60 wpm speed and 13.4 ms wide for 100 wpm speed. If the pulse widths are not as specified, then substitute a potentiometer (25k) for the 18k or 15k resistor in the oscillator circuit and adjust it until the specified pulse width is obtained. Then measure the resistance of the potentiometer and replace it with a fixed resistor as close to the measured value as possible. With the mode select switch in MH (mark hold), the output on pin 10 of IC3 should go to a steady low.

The unit is now ready for use in tests via a TTY dc loop or computer TTL interface. ■

References

1. "An Intelligent RTTY Station," *73 Magazine*, April, 1977.
2. "Computerized RTTY Takeover," *73 Magazine*, May, 1977.
3. "A TTL R-Y Generator," *The RTTY Journal*, January, 1974.

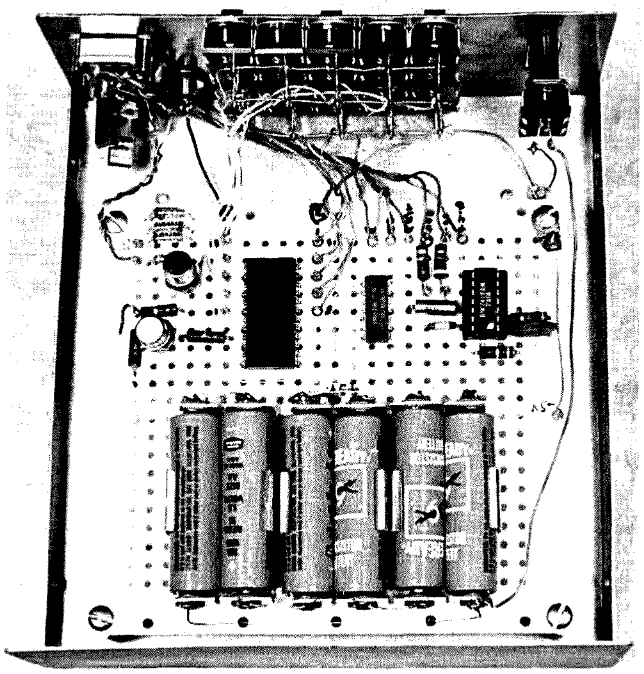

Inside view of the TTY test set.

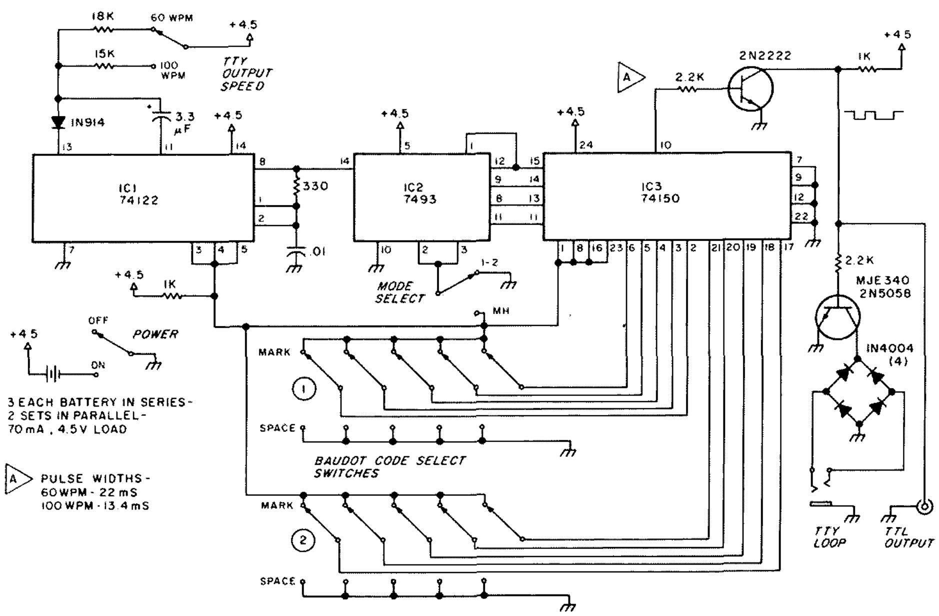

Fig. 1. TTY test set schematic diagram.

Martin Greenbaum K2HTO
3070 Hull Avenue
Bronx NY 10467

It's A Ham's World

—*show this one to a non-amateur*

This is the fantastic world of amateur radio. More than a hobby, amateur radio is a service recognized and encouraged by the governments of most nations. It has possibilities that are as unlimited as the universe itself.

Amateur radio operators (hams) come from all walks of life. There are no boundaries of race, color, or creed. Common goals and interests unite hams spreading international goodwill via the airwaves.

You can have the world at your fingertips in two-way communication, from an expedition through the deepest jungles of the Amazon to one on a desolate Antarctic outpost. Orbiting satellites can carry your signals over vast areas never before dreamed possible. Television transmitters span the oceans, allowing you to see your contacts. Signals amplified by repeaters increase your coverage tenfold. You can bounce signals off the moon to distant stations, witness the marvels of radioteletype (RTTY), or be astounded by automation via microcomputers. Whether your interests will center on contests, foreign stations (DX), public service, building and experimentation, satellite communication, certificate hunting, rag chewing, or any one of the many other facets, these realities can be yours.

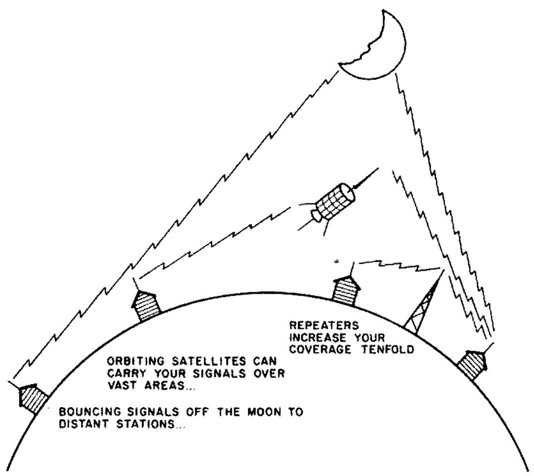

Fig. 1. The world at your fingertips through the airwaves.

True, most hams would need more than one lifetime to cover every aspect of amateur radio. It has also been said that they would need a bank account to match. Amateur radio is an investment – an investment in the education of the young for a lifetime career in electronics, for lifesaving communication when all other means may fail, and for your own enjoyment – an investment that is considerably less, dollarwise, than almost all the other pastimes imaginable and one that is much more rewarding. Once that initial investment is made, it may cost you only as much as the cost of the extra electricity you consume. On the other hand, it can also cost you the price of that new equipment you must have to keep up with the Joneses. But, by starting out with a modest station, new or used, many of the aforementioned activities can be realized.

Your License

Every 10 or 20 years, a World Administrative Radio Conference (WARC) is held. Preparations are now being made for the next one, which will take place in Geneva in 1979. This conference (WARC-79) will decide the frequency allocations for all radio services for the remainder of this century. Regardless of size, each country has one vote.

Amateur radio, which is included, must abide by the rules, regulations, and frequency allocations as set forth by the Federal Communications Commission (FCC) as a result of the conferences.

Because of its scope, certain requirements have been made regarding the amateur radio service. You must pass tests in international Morse code and electronic theory. Questions on rules and regulations are also included. The tests are of a multiple-choice nature.

There are 5 license classes: Novice (beginners), Technician, General, Advanced, and Amateur Extra. You start out as a Novice and work up the ladder to Amateur Extra, in each case taking the extra

test elements needed for advancement. All tests, except the Novice class, are given by FCC examiners at your closest FCC exam point. The Novice test may be taken in your own home, supervised by an amateur volunteer with a General class license or better.

Courses are held by many radio clubs. You can check to see if one is available in your area by getting in touch with a local amateur. If not, you may request help through some of the monthly amateur radio magazines. License manuals, code tapes, records, and practice materials are available from many sources.

There are no age limits in the United States. Armed with your determination, the passing of the FCC exam can be only weeks away. If you fail? So what! Take it over again at a later date. How many of us fail our first driver's test and pass the second one with flying colors? Sooner than you realize, that ticket will be in the mail with your own distinctive callsign.

1976, a year of surprises, saw the passing of a Novice exam by a 5-year-old boy from Vincennes, Indiana. Little Neil "Rusty" Rapp WN9VPG, not quite in the first grade, mastered the code and gained sufficient knowledge to earn a Novice license. The test was administered by a radio club and signed by the entire radio class as witnesses. The spark responsible for igniting his interest was the use of the Citizens Band (CB), on which he used the handle "Little Shadow." He is truly an inspiration for anyone contemplating upgrading, whether it be within the amateur ranks or converting from CB to ham radio.
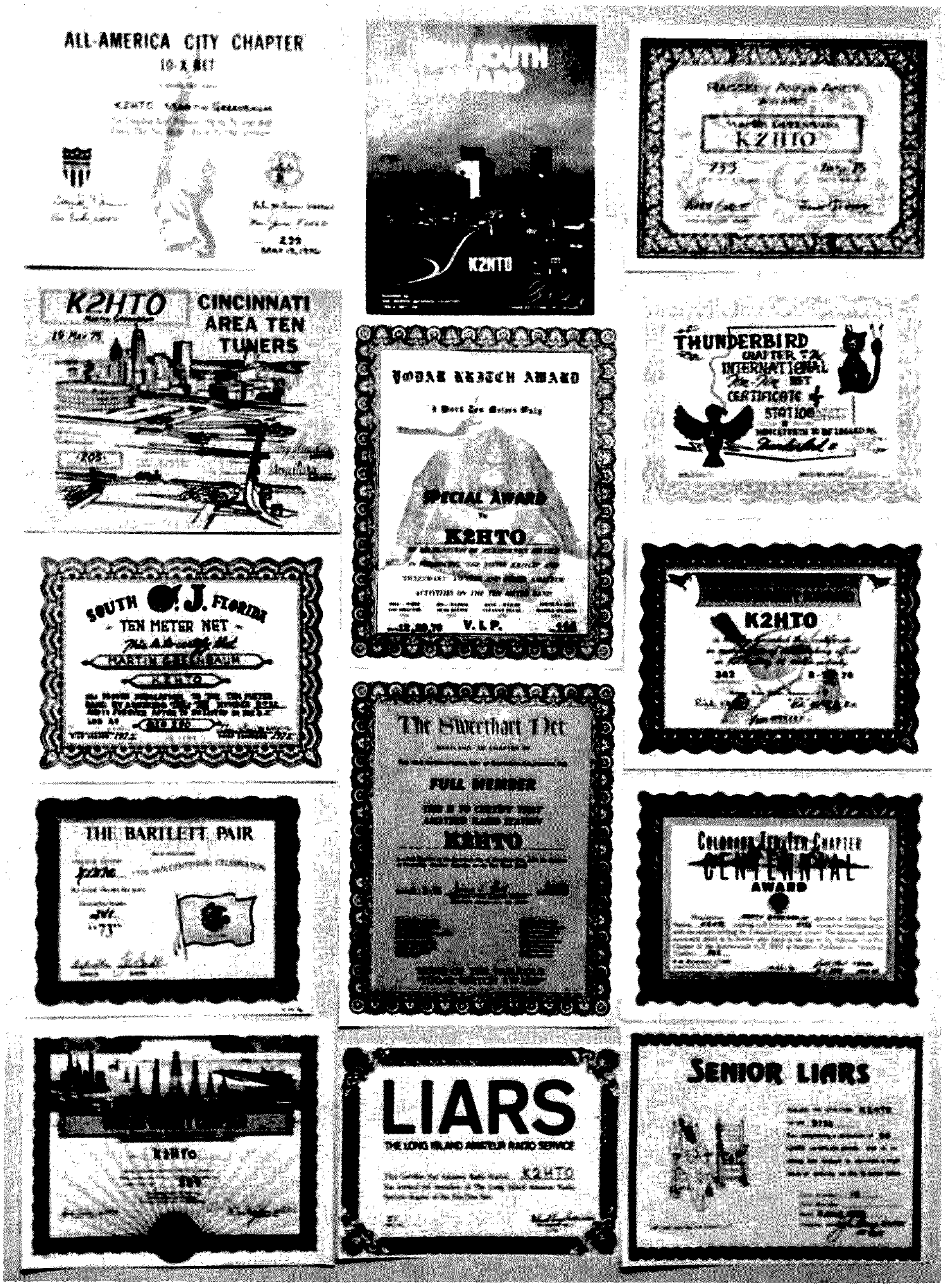
Certificates recognize your abilities and achievements as a ham.

Confirmation (QSL) Cards

When you receive your license, you will most likely set an initial goal. Whatever that may be, over-the-air contacts will be made. Communication is the name of the game. No doubt you will want confirmation, in the form of QSL cards, as proof of some of your prized contacts.

Some QSL cards are very colorful and interesting. Others may be very simple black and white hand-designed forms of standard postcard size. Either type will contain the necessary data needed for verification that the stated contact did take place. The cards are used as proof of contact for many of the certificate and award programs that are available.

In the past, an exchange of QSL cards with each station you worked was considered a final act of courtesy. With today's ever-increasing postal rates, however, the exchange of cards (QSLing) is kept to a minimum. Many amateurs will not return a card to you unless you enclose a self-addressed stamped envelope (SASE). In some of the rarer states, rare in terms of amateur population — such as Alaska, it is not uncommon for active hams to receive thousands of cards each year. That's quite a financial burden if they have to supply return postage also. A New York ham may receive none unless his requests contain an SASE.

Foreign (DX) amateurs

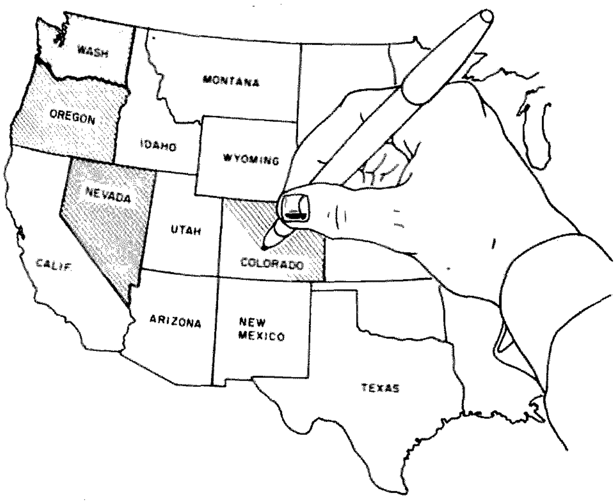

Fig. 2. With one appealing form of recordkeeping, hams enjoy coloring in maps as new areas are worked.

may request international reply coupons (IRCs), which are obtainable at your local post office. This coupon is exchanged by the foreign amateur for stamps of the corresponding denomination at his local post office.

To offset the high cost of QSLing, QSL bureaus are used in most countries having a considerable amount of ham activity. They are incoming and outgoing clearinghouses that permit you to accumulate cards and mail them at bulk rates to a central point for redistribution.

QSL cards are available from many printers as advertised in many of the amateur radio magazines. You can make your own personalized cards, if you so desire.

Your Logbook

Although present FCC rules require a minimum of recordkeeping, an accurate logbook is still a necessity for the active ham. The log is a written record of your contacts and achievements toward your goal. It contains all the necessary data for QSLing. It is a list of all the stations you worked, how, when, and where. You can buy logbooks or make them if you prefer.

Certificates and Awards

One particular pursuit in the world of amateur radio is certificate hunting. It is considered a hobby within a hobby. Certificates are awards for your achievements. They can be the final step of one goal or the start of another.

Thousands of certificates are available, more than you may ever come close to earning. Most are of the paper or parchment variety. Some of the super awards are wall plaques. Many are in full color; others are black and white. Professionally printed or hand drawn, all are suitable for framing. They are your rewards for working the required amount of counties, states, countries, continents, zones, or whatever your goal was to achieve the award. It can show your Morse code proficiency or your moonbounce efficiency.

Novelty certificates are also available. There are certificates for having certificates and ones for almost having certificates, certificate-haters' certificates, and ragchewers' certificates. Some are easy to earn; others can take a lifetime plus some. A nominal fee to help cover printing costs and postage is required for most certificates, although some may be free of charge. That is the exception rather than the rule.

Many of the popular awards started years ago. Some are very recent. Special event awards are also very popular, as hams witnessed during the United States Bicentennial of 1976, perhaps never to be matched until the Tricentennial of 2076. Hams all over the world were trying to contact and confirm as many U.S. stations as possible in all 50 states for the special bicentennial awards that were available.

Commemorative QSL cards and certificates are issued for historical events, also. These special cards can be considered miniature certificates. One such event was the landing of the Viking spacecraft on the planet Mars during the U.S. Bicentennial of 1976. Special event station N6V was put on the air by the Jet Propulsion Laboratory Amateur Radio Club from Pasadena, California. The lucky thousands who contacted this station now possess a historical document in the form of a commemorative QSL card.

Certificate Hunting

Several popular award programs will issue a certificate when you reach a minimum plateau. Endorsement stickers will be issued to be attached to the certificate as you pass each predetermined stage toward the certificate goal. This method is very popular in the United States County Hunters Award, among others.

1. County Hunting (USA-CA)

The award program for trying to contact all U.S. counties can also be considered a hobby within the certificate-hunting hobby because of its scope. It involves contacts with 3076 counties to complete the award. There are two different versions. One calls for the initial certificate to be awarded upon QSL proof of any 500 counties. The other requires a minimum level of 300 counties, as long as all 50 states are included. QSLs are not needed for this one, but an approved list is.

County hunting can be the source for obtaining many certificates. County and certificate hunters have formed chapter clubs throughout the U.S. Many issue certificates when you complete working all counties of that particular state, which also serves as a morale booster in your quest for all 3076 counties. It's not an easy feat, but is quite enjoyable as far as you can go.

The Certificate Hunters Club (CHC) is an aid for county hunters as well as other groups. Regular over-the-air schedules are held where members may get together. This get-together is called a network (net). One person usually keeps things in order. This task is undertaken by the net control station (NCS). Nets are quite common for many special-interest gruops. They allow an up-to-date transfer of information and permit those who sign into a net to work other stations that may be needed for their certificate goals. New stations are welcome to call in. Special QSL bureaus are available for county hunters.

2. Ten-Ten (10-X) International Net

Amateur operating frequencies are found throughout the radio spectrum. Each group of frequencies is referred to as an amateur band. The frequency privileges hams enjoy are directly related to the license class they hold.

The Ten-Ten Net operates on the 10 meter amateur band. It is a very popular and novel source for obtaining a variety of fascinating awards. Unlike the county hunters who operate more than one amateur band to gain credit toward their goal, the Ten-Ten Net utilizes only the 10 meter band.

Each member has an assigned number called a ten-ten number. U.S. stations

may become members by collecting 10 ten-ten numbers. You are issued a certificate, along with your own ten-ten number, making you a member of the Ten-Ten Net. It is an international club. Foreign stations need 5 ten-ten numbers for membership.

Chapter clubs issue awards that are termed self-propagating or nonpropagating. Self-propagating awards are generated by a chain reaction. The award holder can pass the certificate number over to you for credit, regardless of his (her) geographical location. For a nonpropagating one, you must work the local chapter members directly. Once you receive a nonpropagating certificate, you are unable to pass that certificate number on to the next station, unless you yourself also reside in the geographical area and are a member of that chapter. An average of 5 members must be worked for the majority of the ten-ten chapter awards. A few require a contact with at least 1 local member and any other 4. Some use a point system.

Super category awards are also issued. There are senior, super, and VIP programs available. Some hams may favor collecting ten-ten numbers only. Large collections of the numbers qualify you for various awards. Collecting 500 different numbers makes you a VIP in the Ten-Ten Net; 1000 merits you a plaque. Log information only is needed for 99% of the award programs; very few will require QSL cards. Many nets are active throughout the country, and you are invited to sign into one.

3. Worked All States (WAS)

This award is considered to be one of the most sought-after awards. It is as standard to amateur radio as bait is to fishermen. Rules are quite simple. Contact and confirm all 50 of the United States. Contacts may take place on any band. The super version of this award is a lot tougher. Rules, again, are simple. Contact and confirm all 50 states on each of 5 different amateur bands (250 contacts in all). Accomplish this and you have earned the 5-Band Worked All States Award (5BWAS).

The plaque available for the 5BWAS is charged for. It is higher than the nominal fees required for most certificates, but I don't think anyone has ever passed this one up because of the higher fee.

Some states are easy to catch; others are difficult. What holds true on one band may be reversed on another. Transmission conditions on the same frequency tend to vary with the year, season, and with the time of day, so results are not always predictable.

There are many nets to which stations from all over the United States call in. If permissible, sign into one of these nets and request permission to call the stations in those states you are lacking. Do not overdo this, as many other stations will be waiting for you to finish your contacts so they can finish whatever business they have with the net. During 1976, the special Bicentennial Net had check-ins from all 50 states, and that was all in one evening. You may have to work a state more than once if the first contact did not produce a QSL card. Making contact will not guarantee you a confirmation card, even if you have enclosed an SASE with your request.

The three previous award programs summarized can be enjoyed by concentrating your operations on United States stations. Let's go international and review some of the other programs available.

4. DX Century Club (DXCC)

Perhaps faraway places and exotic lands excite you? If so, the DXCC award program will be your taste of honey. In popularity, it shares the limelight with the WAS award. Rules are simple. Contact and confirm 100 different countries. Endorsement stickers are issued afterwards for each group of new ones you confirm. At first, this may appear a little more difficult than it actually is.

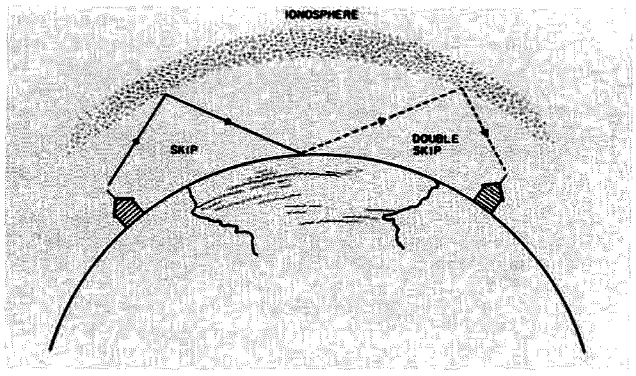

Fig. 3. Hams talk to the world by means of "skip" signals, which are signals reflected off the ionosphere to distant areas.

Countries are added and deleted from a master list. As history changes, so may the geographical status of what we define as a country change. The term "country" is an arbitrary one and does not necessarily agree with the dictionary definition. One criteria in determining a country is its distance from the mainland. There are, at present, more than 300 countries by the standards used to maintain an official amateur radio country listing. Uninhabited islands and some reefs are included in the listings.

In the WAS program, you have no choice but to confirm all 50 states. The DXCC program gives you the choice of 100 out of more than 300 countries. This tends to lessen the difficulty of achieving the established goal.

Because no amateurs live in certain areas of the world, expeditions are undertaken by various amateur groups and organizations to put them on the map, as we say. Permission to do so must be granted by the governments of the countries involved. Operations in this manner are referred to as DXpeditions. Radio gear is set up, and thousands of contacts may be made.

This situation may create what we call a pileup. It occurs when untold numbers of stations all pile up on or near the same frequency to call the rare DX station. Competition from your peers is directly related to the rarity of the station. Your contact exchange information will be kept to an absolute minimum under these circumstances, though this does not mean that you will be always unable to have lengthy conversations with hams in foreign and exotic lands.

The thrill of confirming the rare countries far exceeds any problems encountered in doing so. Reaching the goal of DXCC is not difficult. It rests solely on the capabilities of the operator and his station.

The program also maintains an honor roll that many an avid DXer would like to reach. The excitement of working a new country can be likened to the saying: "When asked of the mountain climber, why did he scale Mount Everest, he replied, 'Because it's there!' "

The super version of DXCC is similar to 5BWAS. Contact and confirm 100 countries on 5 different amateur bands. For this achievement, a plaque is available subject to the higher fee. You can send QSLs direct or via DX QSL bureaus.

5. Worked All Continents (WAC)

Sponsor	Awards
73 Magazine Peterborough NH 03458	10-40 Award and 10m DX Decade Award, novelty and other certificates available from time to time
American Radio Relay League 225 Main Street Newington CT 06111	Worked All States (WAS) and 5BWAS, DX Century Club (DXCC) and 5BDXCC, Worked All Continents (WAC), Rag Chewers Certificate, and others.
CQ, The Radio Amateur's Journal 14 Vanderventer Avenue Port Washington NY 11050	United States of America Counties Award (USA-CA), Worked All Zones (WAZ), Worked All Prefixes (WPX).
International Amateur Radio Society PO Box 385 Bonita CA 92002	United States County Hunters Award (USA-CA), Certificate Hunter's Club (CHC) Directory of Certificates and Awards.
Ten-Ten (10-X) International Net Richard Levy WB2MAN 30A Arleigh Road Great Neck NY 11021	

Table 1. For further details and complete rules towards the certificate programs listed, direct your inquiries (with a self-addressed stamped envelope) to the sponsors listed here.

The WAC award program rules require one confirmation in each of the six continents of the world. Confirm Africa, Asia, Europe, North America, Oceania, and South America and the certificate is yours. Problems in reaching this goal are negligible. U.S. stations on the east coast may encounter some difficulties in working Asia. West coast stations will find Europe more difficult. Many hams have accomplished this feat in one day using low-power transmitters and simple antennas. Verified reports show the accomplishment reached in less than an hour. Nets are active that have stations signing in from all continents. This is just one more award you will be proud to have.

6. Worked All Prefixes (WPX)

Many years ago, amateur radio operators were responsible for pioneering the airwaves. They communicated over paths not thought possible at that time. Radio was in its infancy and government control was yet to come. It was unclear where stations were originating from, and it became apparent that some form of call letters had to be used to designate a station's point of origin. The wireless pioneers decided to use a letter to designate their country, followed by a number, in some cases, to show the geographical area of that country. The prefix, in many cases, was followed by the operator's initials. Thus, a station in Japan may have used the callsign J3TL.

Some years later, government controls became operational. Rules, regulations, and frequency allocations were imposed through international radio conferences. Blocks of prefixes for use as radio call letters were assigned to all countries. Amateurs worldwide were licensed and reassigned distinctive callsigns by their respective governments. The WPX program makes use of that fact.

Confirmation of 300 different radio prefixes will qualify you for the initial WPX certificate. Endorsement stickers are issued afterwards. If you consider the fact that there are more than 300 countries on the official amateur radio country listing and multiply that by the combination of prefix arrangements for each country, the results will be in the thousands. The U.S. alone has over 50 possibilities. Actually, there is no count of the total number of prefixes possible. Special event stations may also use special calls. There is no ending to the WPX program. Your challenge will be to remain on top.

7. Worked All Zones (WAZ)

The world is broken up into 40 radio zones. Each zone consists of 1 or more countries. You must confirm at least 1 country in each of the 40 zones. Some of the zones are quite easy to work and confirm. Zone 23 (Tibet, the People's Republic of China, and Mongolia) may test your patience. You may have to wait for a DXpedition to the rarer zones before attempting a contact.

In the DXCC program, you can achieve the initial certificate without ever working a rare country. The choice you have in the WAZ program is that only 1 country is required in each zone. In a rare zone, you may have a choice of more than 1 country. This, like any other award program, will be a challenge. If the challenge were not there, the certificates would have no merit.

There is an adage used in amateur radio: "You can't work them if you don't hear them." This is also true in reverse. The station you call may not be able to hear you. You must also remember that a contact will remain unconfirmed until you receive that QSL card. Until that confirmation is received, you will be unable to use that contact towards most of the award programs. Once the challenge is met, the confirmation also becomes more meaningful.

Other Award Programs

There is something for everyone in the world of amateur radio. This also holds true in certificate hunting. The award programs listed are by no means a complete listing. This list does not even cover a fraction of those available. They are mentioned solely for the purpose of giving you an idea of the fun involved, the skill required, and the challenges to be met in reaching the goals for the various certificate programs. Other award programs may appeal to you more than those summarized.

The United States is not alone in certificate programs. Many other countries offer their versions. Canada offers an award for working provinces, just as we offer one for working states. New programs are constantly being introduced. The certificate hunter can keep abreast of them. Certificate directories are available. The Certificate Hunters Club is another source of up-to-date information.

Getting Started

Once licensed, you should try to amass as many QSL cards as possible in as many geographic areas as possible. This gives you a head start when you are ready to pursue a certificate goal.

QSL cards are very versatile. They may be used as confirmation for more than one award program. A QSL from one United States contact may be used towards a county (USA-CA), a state (WAS), a country (DXCC), a zone (WAZ), or even a prefix (WPX), among others. When pursuing one goal, you will be accomplishing more than you realize towards another goal perhaps killing five birds with one stone.

As a beginner, it will be wiser to concentrate on the easier award programs. When you have upgraded your skills, you may want to

specialize in one of the tougher ones. Amateurs with less competitive equipment find it easier to use Morse code instead of voice to work the DX stations. Some with the best of stations may also prefer Morse code. During adverse conditions, dots and dashes come through more clearly than other modes of communications.

Recordkeeping

Keeping track of your progress can be a tedious chore if you are unorganized. Special record books and formats are available for you to track your progress towards an individual award. They are an aid in keeping your record chores simple. Duplications are avoided. It can be frustrating trying to work some hard-to-get stations, only to find out later that you already had confirmed that area.

Many enjoy coloring in maps as new areas are worked and confirmed. Record books and forms are available from the sponsors of the larger award programs. Some are available from commercial sources. You may also design your own.

Contests

Many contests are held each year, and most are annual events. They are an aid in allowing many quick contacts. Each contest can be an asset to you in your hunt for certificates. If you are skilled and lucky enough, you may work all 50 states, 100 or more countries, hundreds of counties, or whatever you need to get a big jump on that desired certificate.

The majority of contests are held on weekends when most amateurs can find some time to participate. It is not necessary to go all out and try to win a contest. Those who do may go without sleep for the entire contest period. You may operate as little as you want or as much as you are allowed to by the contest rules. It can possibly take you a year or more to make as many contacts as can take place on one contest weekend. Contests keep you alert, help to develop your skills, and make you a better operator.

This display of QSL cards shows the variety possible in design and the printed message they convey.

Amateur Radio Versus Citizens Band

There is no denying the benefits of CB, but amateur radio is the answer to those desiring something more advanced. The original CB concept was to provide reliable short-range communications, not to exceed 150 miles. Communications over this range are covered by radio signals that tend to hug the surface of the Earth – "ground-wave" signals.

Signals reflected off the ionosphere to distant areas are called "skip" signals. Whereas CB users rely on ground-wave signals, hams take advantage of skip conditions to talk to the world, and it is very much legal. Most of the shortwave amateur frequencies are allocated on a worldwide basis to the amateur radio service.

Skip conditions increase on the higher shortwave bands during sunspot cycle peaks. Intense layers of

ionization in the atmosphere cause this phenomenon. The sunspot cycle runs its course every 11 years. Educated predictions place the next peak around 1982 for cycle #21. During these peaks, the ionosphere tends to play tricks with radio and TV signals, as many have witnessed in the past with reception of distant TV stations. There is also a likelihood that, at times, the CB band will be useless for short-range communications with skip stations overriding all but the strongest local stations.

Don't miss out on the benefits of operating as an amateur during the current upswing of cycle #21. Now is the time to enter the world of amateur radio.

Hams are not limited to channelized operations as found in the CB service. They may move anywhere in the frequencies assigned by the use of variable frequency oscillators (VFOs), commonly called sliders in CB lingo. VFOs provide greater flexibility and help to minimize interference.

You may use power levels up to 200 times as much as afforded the CB service.

Wide choices of communication modes are available. You have an excellent chance to share in experimentation of new modes that may develop in the future.

You will literally make worldwide acquaintances, some leading to lifelong friendships. Chances of meeting your DX friends are enhanced through international ham-hop clubs. It's "the greatest hobby in the world," say kings, princes, governors, senators, astronauts, and other celebrities who are licensed hams.

The sportsmen, actors, and actresses have their trophies and awards for their achievements. The amateur radio operator is rewarded with certificates and the knowledge that his achievements are made possible by a radio privilege that he has earned by proving his qualifications.

Your Benefits from A to Z

Amateurs talk to the world.

Bands of frequencies are allocated to amateurs on a worldwide basis.

Contests are aids in your quest for certificates.

DXCC is an award for your achievements.

Educational values enhance lifelong careers.

Friendships are made throughout the world.

Governments worldwide recognize and encourage amateur radio.

Ham-hop clubs enable person-to-person visits with DX friends.

International goodwill is spread via the airwaves.

Justification of the amateur radio service is an international fact.

Knowledge of foreign cultures is enhanced.

Licensed amateurs have proven their qualifications.

Marvel to the wonders of radioteletype.

Nets are held by many special-interest groups.

Orbiting satellites can carry your signals over vast areas.

Power levels up to 200 times as much as those afforded the CB service may be used.

QSL cards are confirmations of your contacts.

Repeaters amplify your signals and increase your coverage.

Skip signals help amateurs to work long distances.

Television is a mode of amateur communication.

Unlimited possibilities await you.

VFOs are used for greater flexibility.

Worked All States is enjoyed by many.

Xcitement galore.

You have the world at your fingertips.

Zones are an asset towards certificate programs. ■

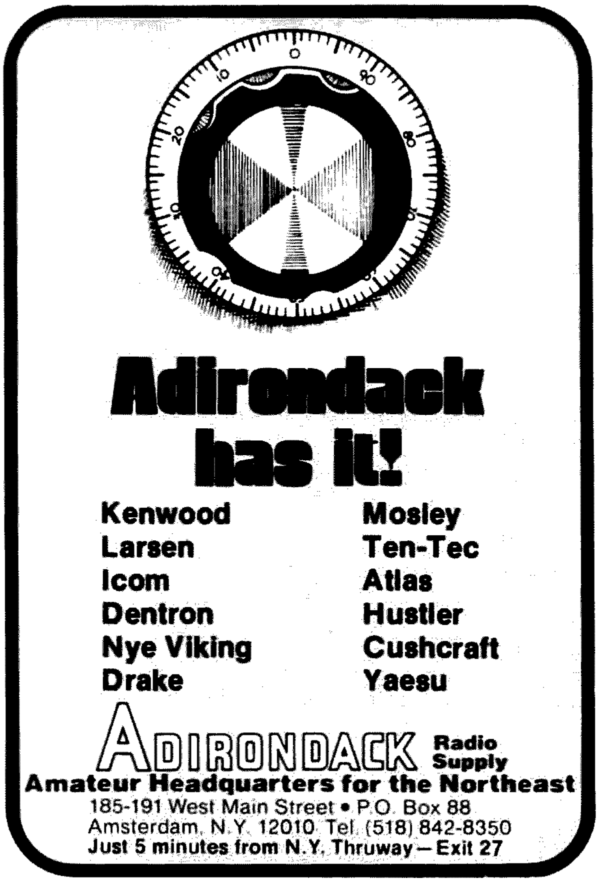

Roy Cawthon
2580 Norcross-Tucker Road, Apt. 95
Norcross GA 30071

Attention, Weather Watchers!

—advanced circuitry for WEFAX processing

The purpose of this article is to present some solid state circuitry ideas on reproducing satellite APT/WEFAX pictures. I have felt for some time now that there has been room for improvement in equipment currently in use. Most people have been resorting to a small army of vacuum tubes to do the work in facsimile machines. Almost everyone is using a sensitive solid state receiver, so now it's time to improve the video processing. The schematics on the following pages are currently being used here to process GOES WEFAX. They have been doing so since GOES WEFAX was initiated in the

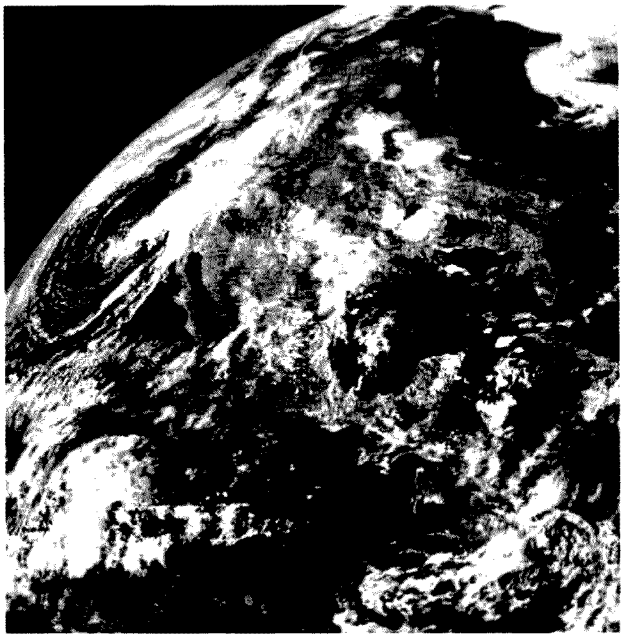

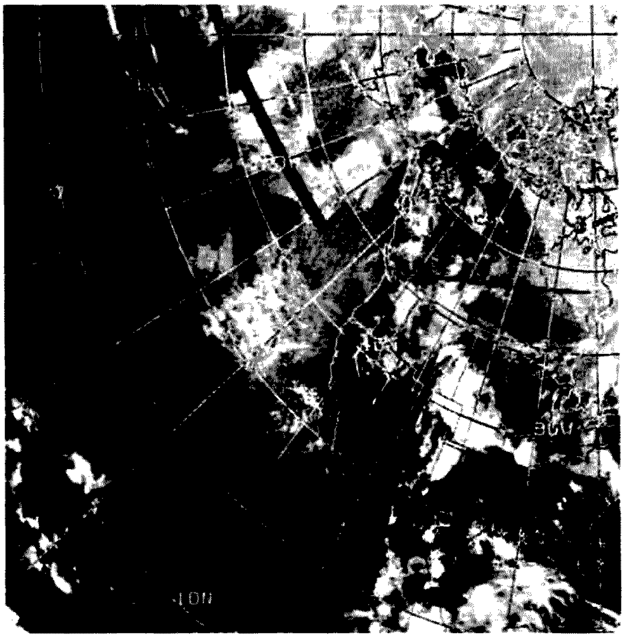

summer of 1975 through SMS-1 on a regular schedule. Some of the features these circuits offer are:

1. Solid state design.
2. Closed-loop automatic gain control (agc).
3. Selectable agc time constants.
4. Precision video demodulator.
5. Low-ripple video filter with high out-of-passband attenuation.
6. High reliability.

These circuits by no means approach the state of the art; however, they can make a vast improvement in your satellite photos. The satellite photos displayed in this article were transmitted over the GOES WEFAX data link and were processed by my homemade facsimile machine. I feel that, with careful construction and planning, most homemade facsimile machines can equal or surpass many commercial APT displays. The following discussion on video processing and the schematics should throw some light on what I am currently doing with GOES WEFAX.

Theory of Operation

In Fig. 1, you see the input video amplifier. The receiver input, tape-recorder input, and test-pattern generator switching relays are also shown.

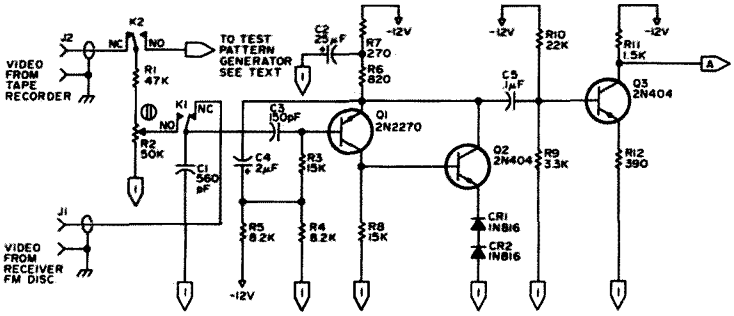

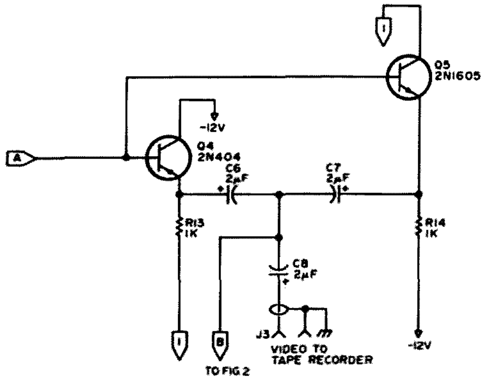

Fig. 1. Input amplifier and relay switching.

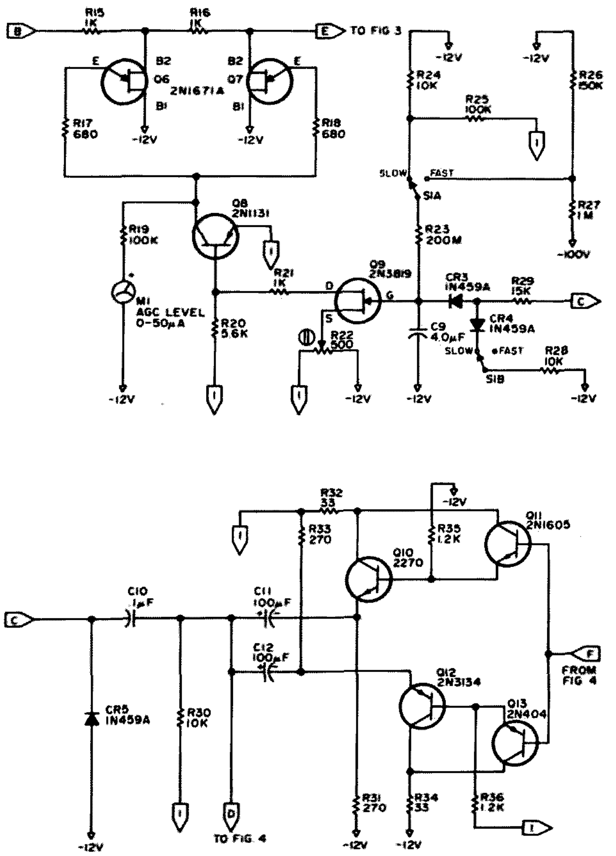

Fig. 2. Electronic attenuator and agc detector.

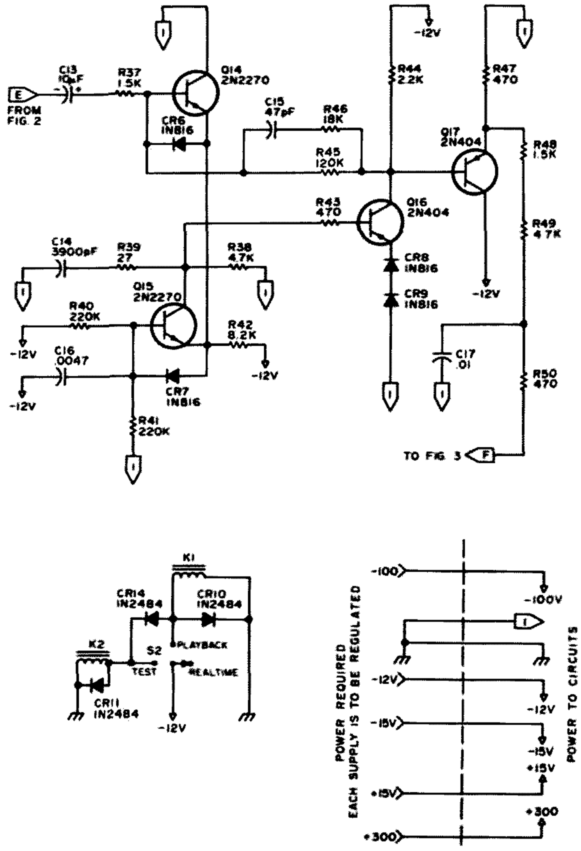

Fig. 3. Agc amplifier and mode selector.

Switch S2, in Fig. 3, selects the operating mode, or the position K1 or K2 is in. For now, assume S2 is in the real-time mode. With S2 in real time, K1 and K2 are normally closed. Video is now supplied from the FM discriminator in the receiver to J1 and into the video preamplifier. Transistors Q1, Q2, Q3, Q4, and Q5 amplify the input signal from the receiver sufficiently to drive the J3 output. Output J3 supplies amplified video to a tape recorder. The high-impedance line input on the tape deck should be connected here for recording. Transistors Q1 and Q2 form a Darlington pair; Q4 and Q5 are connected in a complementing circuit. Output J3 is driven by Q4 and Q5 and coupled to the signal via capacitors C6, C7, and C8. The negative end of C8 is supplied to Fig. 2, point B. I will pick up here in a moment with Fig. 2, but, first, I still have two more operating modes on S2 to discuss.

With S2 in real time, my station is acquiring spacecraft data and recording it on tape. In order to play back previously recorded data, S2 is switched to playback. Relay K1 now closes, and the satellite video is played back into J2 from the tape-deck line output. Pot R2 is used to limit the played back signal to the same approximate level as that at which the receiver output is during real-time operation.

The final position on S2 is a test mode. This input is connected to the output of my grey-scale bar generator. It provides the machine with a proper test signal for calibration purposes (see *73*, Apr., '78).

Point B on Fig. 1, as stated earlier, connects to point B on Fig. 2. This is the input to the electronic attenuator. The attenuator output, point E, drives a high-gain agc amplifier, shown in Fig. 3. Its open-loop gain is about 80. The amplifier output, point F, feeds a four-transistor power amplifier consisting of Q10, Q11, Q12, and Q13 on Fig. 2. This amplifier provides drive to the agc peak detector, CR3. The peak detector is used to charge C9 to the peak amplitude of the video signal at point D in Fig. 2. The charge on C9 is slowly bled off by R23. Transistors Q9 and Q8 amplify the value of the charge and produce the voltage/current source needed to control the UJT attenuator. The discharge path of C9 is controlled by S1. Fast decay is for GOES WEFAX, while slow decay is for NOAA radiometer data.

Now, to simplify confusion somewhat, I will try to sum up the purpose of the agc circuit. The main idea here is to control the peak-to-peak level at point D. The agc circuit, when properly adjusted by R22, will hold an unmodulated 2400 Hz input at 3.3 volts p-p on point D. When video variations are present, capacitor C23 does not have time to charge to 3.3 volts p-p because of the controlled decay or discharge path. The video sync, however, will be at 3.3 volts p-p, since it occupies a substantial period of time. The agc circuit is used to compensate for large changes of video peak-to-peak output from a receiver. Also, it sets up a maximum and minimum signal level with which to work. In this case, signals fall between 3.3 volts p-p and the system noise floor.

Knowing these levels, the video detector, filter, and lamp driver were designed. The agc output at point D drives the precision video demodulator on Fig. 4. The incoming

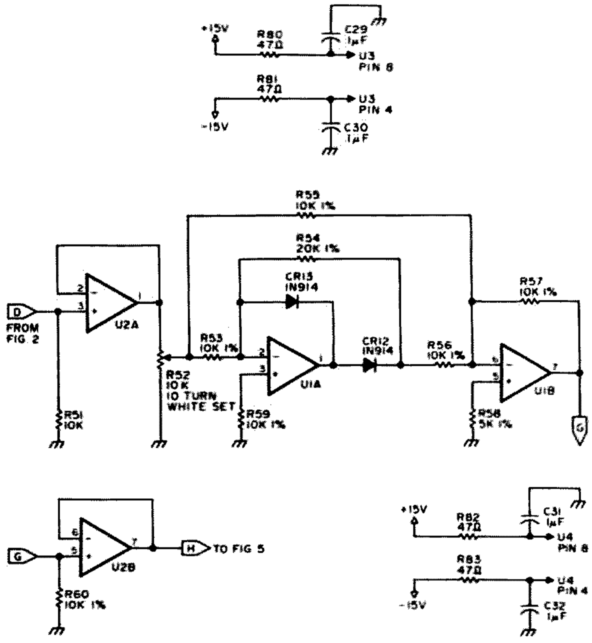

Fig. 4. Video demodulator.

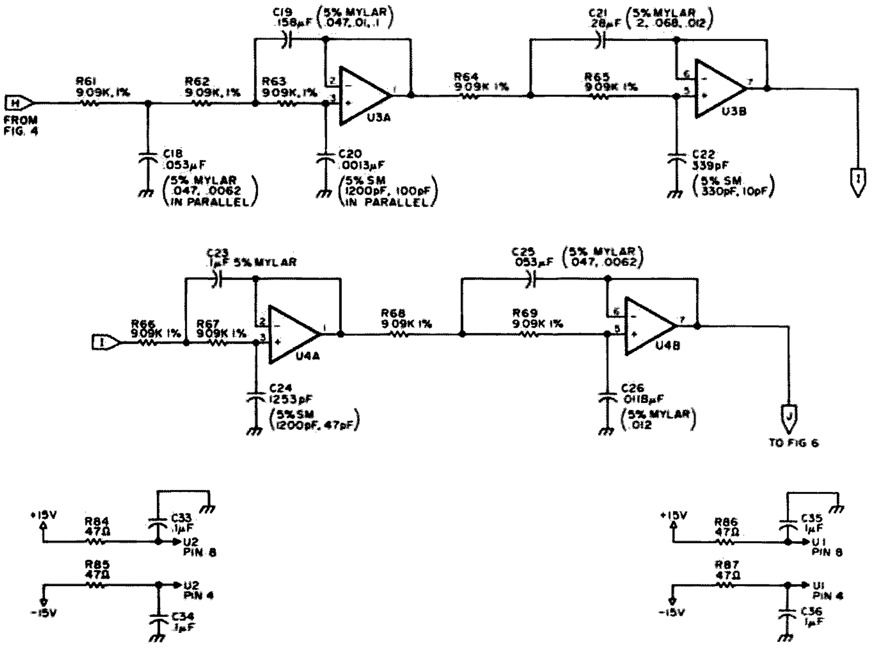

Fig. 5. Video filter. C18-26 are made up from capacitors in parallel.

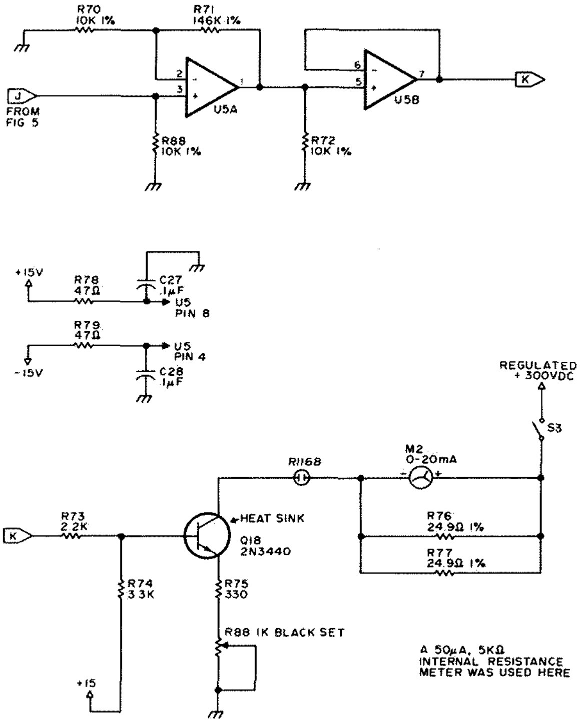

Fig. 6. Lamp driver.

video, point D, is the composite double-sideband AM signal on a 2400 Hz subcarrier. This signal is buffered by U2A and is coupled to the video detector by pot R52. Pot R52 sets the video drive level and is labeled white set. This adjustment controls the white density of the satellite picture.

ICs U1A and U1B comprise the full-wave video demodulator. The demodulated, or rectified, signal at U2, pin 7, contains the subcarrier along with the 0-1600 Hz video information. This rectified video signal is routed to Fig. 5, point H, and becomes the input to the video filter. The video filter is a low-pass, 9th order, .5 dB ripple Chebyshev. It is very flat from 0 to about 1700 Hz and then drops off rapidly to the noise floor. The 0-to-1700 Hz passband allows the desired video information to pass while presenting a high attenuation to the 2400 Hz subcarrier. Once the subcarrier is removed, you are left only with dc variations corresponding to shades of grey in the satellite picture.

The filter output, point J, finds its way to the lamp driver circuit in Fig. 6. ICs U5A and B accept and amplify the filter output to a level sufficient to drive the 2N3440 lamp driver transistor. The video information is used to control the current through Q18 and, in turn, modulate a suitable light source. In this case, an R1168 glow-tube modulator is used. The polarity of the signal on Q18 is such that black, minimum signal, produces the most lamp current, while a white level decreases lamp current. Pot R88 in the emitter circuit of Q18 is used to set the desired black current.

It should be apparent that, with the polarities given, the circuit is set up for positive printing on photographic enlarging paper. I get best results on Kodabrome RC-FH paper. The milliammeter in the collector circuit of Q18 measures lamp current. It is used for calibration of R52 and R88. Finally, a calibration procedure is needed for the video processor. The few simple adjustments are given next.

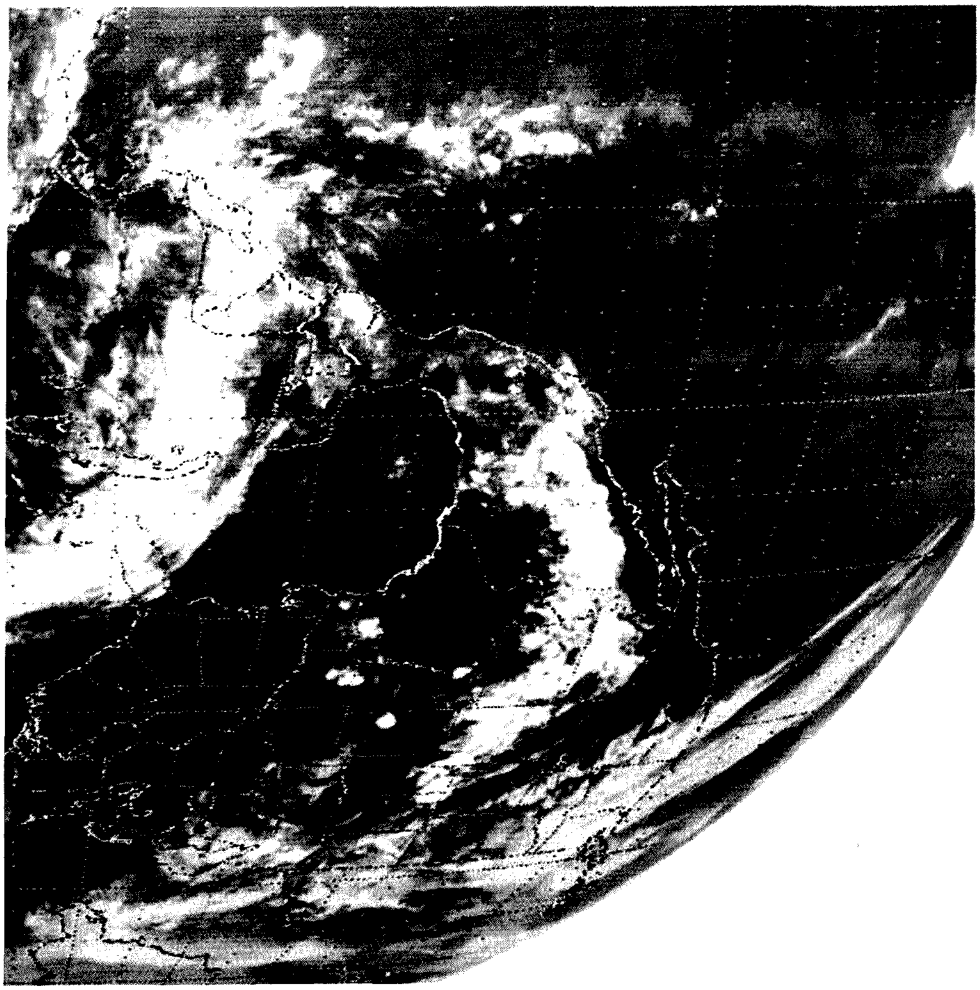

Calibration

First of all, check the wiring! If you have come this far, you have probably already vowed never again to build another satellite project and are certainly in no mood for an explosion. After all, this thing takes some time to wire. A good point to start calibration is by measuring the p-p output level of your receiver discriminator. You should have at least 250-500

millivolts p-p of video output for this circuit. I am getting by with 150 mV, but a bit more drive should be used.

Once you have established the level from your receiver, find a 2400 Hz sine wave signal source and set its output to the same level. Switch S2 to real time, and put the test signal into J1. Set your agc recovery switch to fast. With a scope connected to point D in Fig. 2, adjust R22 slightly and wait. The wait period is to give the agc circuit time to recover. Note the meter reading on M1 as you adjust R22. The meter should not be pegged, but should be somewhere between 10 to 30 uA. Finally, after a few patient minutes, you should have a 3.3 V p-p signal at point D.

Now disconnect the 2400 Hz test signal, and observe the agc level shown on M1 slowly go to zero. Next, reconnect the test signal while watching M1. The current should climb very fast and settle on a steady value. You must have this quick-attack, slow-decay characteristic. When R22 is properly set, the agc circuit will perform in this manner while holding the test signal to 3.3 V p-p.

Next, the white and black set pots are adjusted. First, set S2 to real time and disconnect anything attached to J1. Set R52 and R88 fully counterclockwise. Keep your agc recovery switch in the fast mode. Turn on the lamp with S3. Advance pot R88 clockwise until 9.5 mA is reached on M2. This is the black current set. Reconnect the test signal and turn R52 clockwise until M2 falls within 1.5 and 2.0 mA. This is the white current set. During live reception, the lamp current will average out at 3-5 mA or so. With these current settings and about a 40-second development

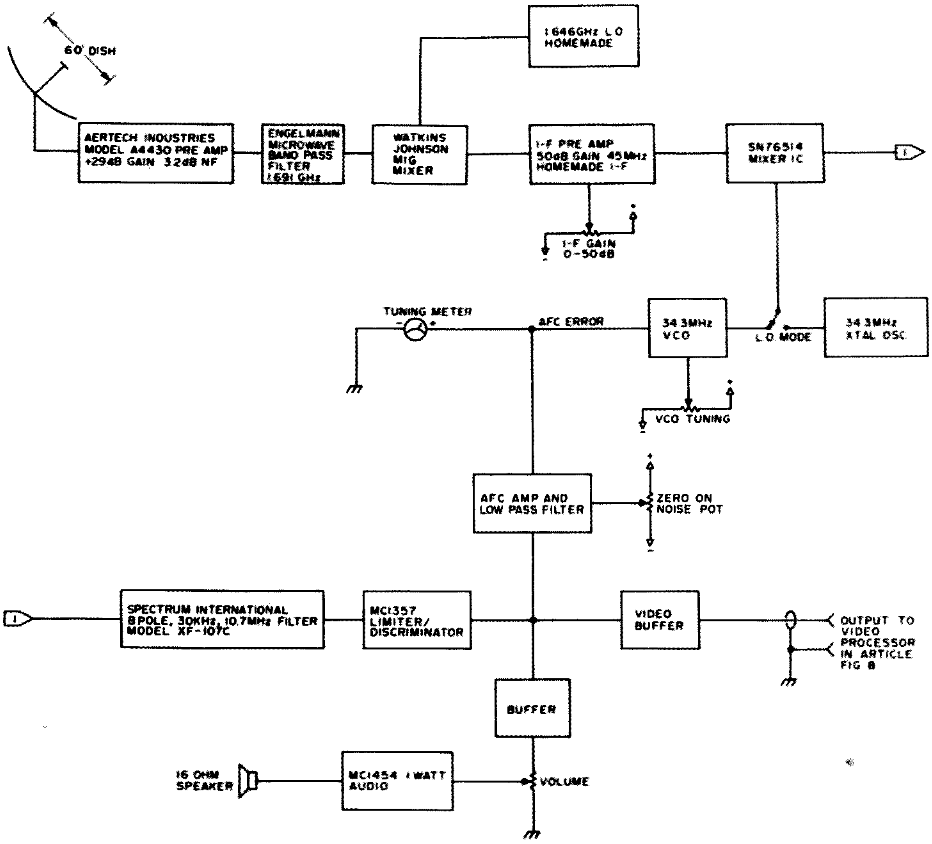

Fig. 7. Receiver at author's station—block diagram.

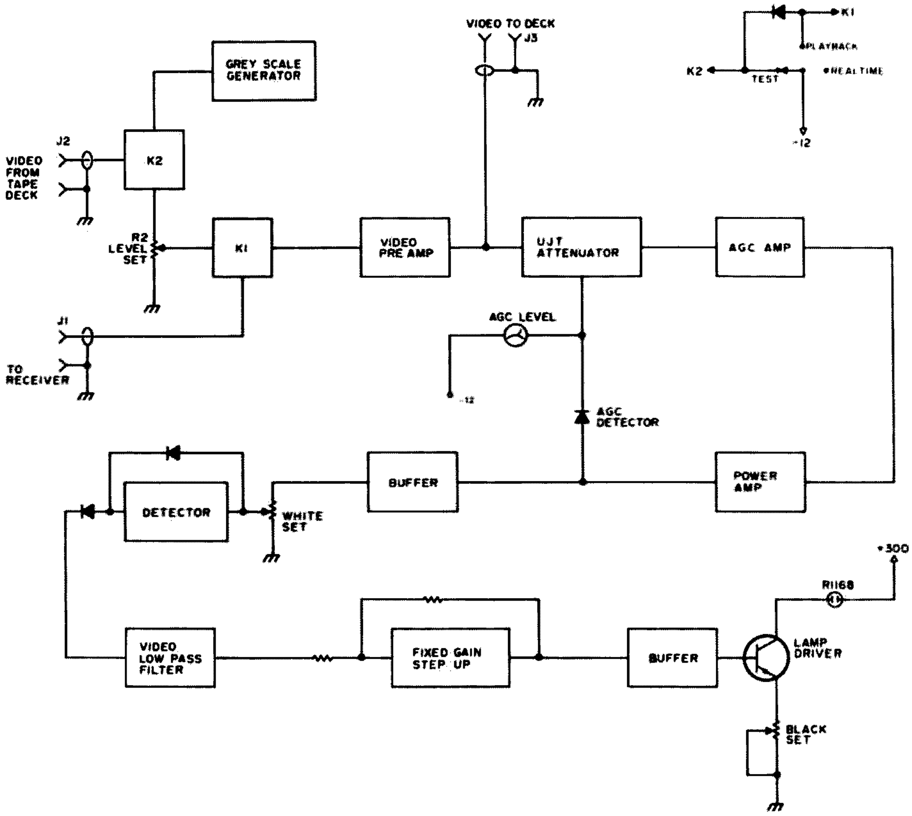

Fig. 8. Block diagram of video processor.

Parts List

C1	560 pF, 5%, silver mica
C2	25 uF, 25 V
C3	150 pF, 5%, silver mica
C4	2 uF, 25 V
C5	.1 uF, 50 V, monolithic
C6	2 uF, 25 V
C7	2 uF, 25 V
C8	2 uF, 25 V
C9	4.0 uF, 200 V, mylar
C10	.1 uF, 50 V, monolithic
C11	100 uF, 50 V
C12	100 uF, 50 V
C13	10 uF, 50 V
C14	3900 pF, 5%, silver mica
C15	47 pF, 5%, silver mica
C16	.0047, 100 V, mylar
C17	.01 uF, 50 V, monolithic
C18	.053 uF
C19	.158 uF
C20	.0013 uF
C21	.28 uF
C22	339 pF
C23	.1 uF
C24	1253 pF
C25	.053 uF
C26	.0118 uF
C27	.1 uF, 50 V, monolithic
C28	.1 uF, 50 V, monolithic
C29	.1 uF, 50 V, monolithic
C30	.1 uF, 50 V, monolithic
C31	.1 uF, 50 V, monolithic
C32	.1 uF, 50 V, monolithic
C33	.1 uF, 50 V, monolithic
C34	.1 uF, 50 V, monolithic
C35	.1 uF, 50 V, monolithic
C36	.1 uF, 50 V, monolithic
CR1	1N816
CR2	1N816
CR3	1N459A
CR4	1N459A
CR5	1N459A
CR6	1N816
CR7	1N816
CR8	1N816
CR9	1N816
CR10	1N2484
CR11	1N2484
CR12	1N914
CR13	1N914
CR14	1N2484
R1	47k, .25 W, 10%
R2	50k pot
R3	15k, .25 W, 10%
R4	8.2k, .25 W, 10%
R5	8.2k, .25 W, 10%
R6	820, .25 W, 10%

R7	270, .25 W, 10%
R8	15k, .25 W, 10%
R9	3.3k, .25 W, 10%
R10	22k, .25 W, 10%
R11	1.5k, .25 W, 10%
R12	390, .25 W, 10%
R13	1k, .25 W, 10%
R14	1k, .25 W, 10%
R15	1k, .25 W, 10%
R16	1k, .25 W, 10%
R17	680, .25 W, 10%
R18	680, .25 W, 10%
R19	100k, .25 W, 10%
R20	5.6k, .25 W, 10%
R21	1k, .25 W, 10%
R22	500 pot
R23	200 meg, 5%
R24	10k, .25 W, 10%
R25	100k, .25 W, 10%
R26	150k, .25 W, 10%
R27	1 meg, .25 W, 10%
R28	10k, .25 W, 10%
R29	15k, .25 W, 10%
R30	10k, .25 W, 10%
R31	270, .25 W, 10%
R32	33, .25 W, 10%
R33	270, .25 W, 10%
R34	33, .25 W, 10%
R35	1.2k, .25 W, 10%
R36	1.2k, .25 W, 10%
R37	1.5k, .25 W, 10%
R38	4.7k, .25 W, 10%
R39	27, .25 W, 10%
R40	220k, .25 W, 10%
R41	220k, .25 W, 10%
R42	8.2k, .25 W, 10%
R43	470, .25 W, 10%
R44	2.2k, .25 W, 10%
R45	120k, .25 W, 10%
R46	18k, .25 W, 10%
R47	470, .25 W, 10%
R48	1.5k, .25 W, 10%
R49	4.7k, .25 W, 10%
R50	470, .25 W, 10%
R51	10k, .25 W, 10%
R52	10k, 10-turn precision pot panel mount
R53	10k, 1%, .25 W
R54	20k, 1%, .25 W
R55	10k, 1%, .25 W
R56	10k, 1% .25 W
R57	10k, 1%, .25 W
R58	5k, 1%, .25 W
R59	10k, 1%, .25 W
R60	10k, 1%, .25 W
R61	9.09k, 1%, .25 W

R62	9.09k, 1%, .25 W
R63	9.09k, 1%, .25 W
R64	9.09k, 1%, .25 W
R65	9.09k, 1%, .25 W
R66	9.09k, 1%, .25 W
R67	9.09k, 1%, .25 W
R68	9.09k, 1%, .25 W
R69	9.09k, 1%, .25 W
R70	10k, 1%, .25 W
R71	146k, 1%, .25 W
R72	10k, 1%, .25 W
R73	2.2k, .25 W, 10%
R74	3.3k, .25 W, 10%
R75	330, .5 W, 10%
R76	24.9, .5 W, 1%
R77	24.9, .5 W, 1%
R78	47, .25 W, 10%
R79	47, .25 W, 10%
R80	47, .25 W, 10%
R81	47, .25 W, 10%
R82	47, .25 W, 10%
R83	47, .25 W, 10%
R84	47, .25 W, 10%
R85	47, .25 W, 10%
R86	47, .25 W, 10%
R87	47, .25 W, 10%
R88	1k pot, 2 W
Q1	2N2270
Q2	2N404
Q3	2N404
Q4	2N404
Q5	2N1605
Q6	2N1671A
Q7	2N1671A
Q8	2N1131
Q9	2N3819
Q10	2N2270
Q11	2N1605
Q12	2N3134
Q13	2N404
Q14	2N2270
Q15	2N2270
Q16	2N404
Q17	2N404
Q18	2N3440
U1-5	MC1458 op amp
K1-2	12 V dc reed relays
S1	DPDT toggle
S2	1-pole, 3-position rotary
S3	1-pole, 1-position ceramic rotary
M1	0-50 uA Simpson meter model 1212
M2	0-20 mA or 50 uA with shunt, 5k int. resistance

time on the picture, I get excellent results.

Now for the moment you have been waiting for: Switch S2 to the test mode. If you have the test-pattern generator working properly, set its output level pot to give the same agc level on M1 you normally see in real time. This will protect the agc circuit from accidental saturation. Now, switch on the lamp, start your drum recorder, and make a test photo. If everything is fine, you should see 12 very nice steps from black to white.

A final note here: Since this article has only dealt with the electronics in the video processing, it is assumed that you already have a facsimile machine. I feel that the *Weather Satellite Handbook* and articles appearing in *73 Magazine* should be explored before attempting construction of a satellite facsimile recorder. I will be more than happy to share some of my automatic picture phasing circuits and phased locked horizontal sync circuits with anyone interested in automating their drum-type facsimile machine. For any help or requests for additional information, please enclose an SASE to speed the return.■

James R. Avoli K3MPJ
1261 Brinton Road
Pittsburgh PA 15221

Interchangeable Test Leads

—*individuality has limits*

How many pieces of test equipment do you have? If the answer is greater than one, then it's very likely that they employ different types of connectors for their test leads. This condition has led to a lot of frustration for me over the years because of the need for several sets of incompatible test leads. But I finally thought of a solution to allow the use of my scope probes with my VOM, VTVM, counter, etc.

The idea was to fabricate a custom connector to fit each individual piece of equipment, so that all my test leads would have a common termination. I selected the bayonet-style connector (BNC) because of the following reasons: 1. the quick disconnect feature; 2. the ability to maintain the impedance of coaxial test leads that are a must when working with rf; and, above all, 3. their cheap availability on the surplus market.

As shown in Photo A, I fabricted the custom BNC adapter from the heaviest gauge solid wire that I could fit into the connectors, even though it took a little filing, to obtain the maximum mechanical stability. For this same reason, I chose to use every mechanical advantage available to me while creating other adapters. In addition to the holding power of solder, I used washers and lock nuts, crimped where I could, used setscrews, etc. If you reuse the original connectors from existing test leads, you won't have to buy new ones to use on the male side of these adapters.

When you're done, you will have an easily removable adapter that in no way defaces or modifies the original equipment, as illustrated in Photo B. But, best of all, every set of test leads will be interchangeable. What more could you ask?■

Photo A.

Photo B.

John Skubick K8JS
1040 Meadowbrook
Warren OH 44484

Happiness Is A Smart Scanner

—*mods for the PBM/AWE FMSC-1*

In my travels, many have asked me about the automatic repeater offset and LED scanner-on modifications for this very popular scanner, the PBM/AWE FMSC-1. For the unfamiliar, this search-type scanner is a plug-in option for the KDK FM transceiver and the Kenwood 7400A. It searches 2 MHz in 4 seconds!

Automatic ±600 kHz Offset

This mod only uses a few parts and takes about one hour to install. The SPDT center-off toggle switch labeled "UP, OFF, DOWN" is replaced with a DPDT center-off switch. Mount the rest of the parts on a 2½ x 1¼-inch piece of .100" x .100" perfboard. Wrap the board and mounted components with one loose layer of electrical tape, and then contact cement it within that big empty space inside the scanner.

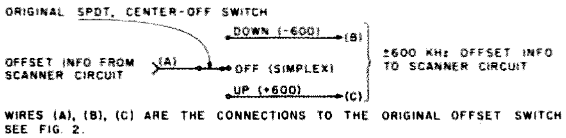

Fig. 1. Scanner's original (manual) repeater offset wiring.

The schematics in Figs. 1, 2, and 3 show the details. Be sure to ground the unused gates of the TTL by connecting them to the minus side of the power supply. TTLs are rather current hungry when the inputs are left floating.

After this simple mod is done, the former "UP, OFF (simplex), DOWN" switch now becomes "NORMAL, SIMPLEX, REVERSE." This switch can be left in the NORMAL, SIMPLEX, or REVERSE position when the scanner is off (DELAY control pot rotated counterclockwise to "OFF").

How the Mod Works

BCD logic from the MHz readout drives the appropriate section of AND gate which in turn drives a transistor relay driver. The reed relays, K1 and K2, control the offset information routing through the NORMAL, SIMPLEX, REVERSE switch. As the rig's readout changes between (14)6.XXX and (14)7.XXX, the offset information routing is being switched when the scanner is ON.

No doubt you hawk-eyed logic lovers will have spotted the way I "cheated" in Fig. 2 to get the easily obtained dual-input AND gates to function in this circuit! The perfectionists among us may prefer Fig. 3, which uses a triple-input AND gate. Either way works well. Fig. 3 might be preferred if someday repeaters are allowed "all over" the two meter band. I used a socket for the IC. My mental logic goes like this: "If the IC is made plug-in, it won't burn out!"

All of the parts are readily available from Allied Radio through Radio Shack. Allied's catalog can be obtained from practically any Radio Shack store. Many of *73*'s parts advertisers should not be overlooked, either. Don't forget, though, that the reed relays specified must be the type that are very small in physical size. They are almost the size of ICs. Other "regular" reed relay configurations may be too large physically to fit on the added circuit board.

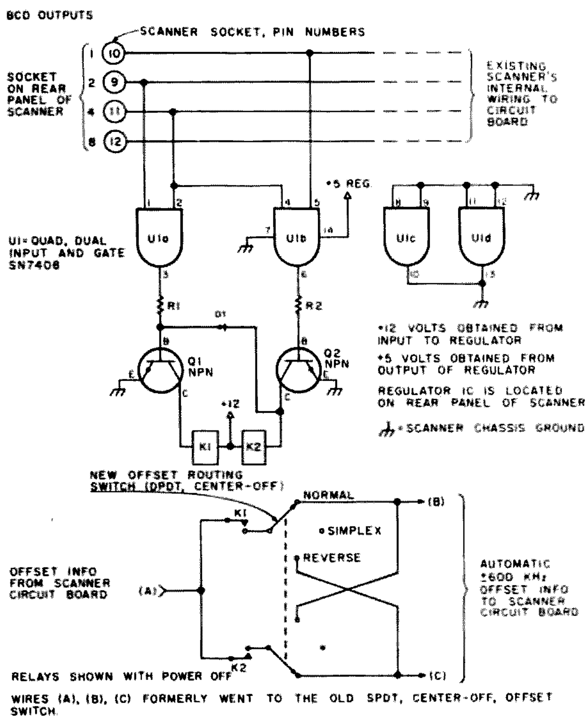

Fig. 2. New automatic-offset circuit added to scanner socket and offset wiring.

Parts List

U1	AND gates, TTL, 7408 or 7411
Q1, Q2	Any NPN silicon transistor such as 2N2222
K1, K2	Reed relays, SPST, 12-volt coil, tiny size such as Allied Radio AMP 2007 (stock #7003-2007, $1.91 each plus shipping)
14-pin DIP IC socket	
R1, R2	500 to 1000 Ohms, ¼-Watt resistors
DPDT center-off miniature toggle switch	
Perfboard, 2½ x 1¼ inches, with .100" hole centers	
D1	1N34 or any germanium diode

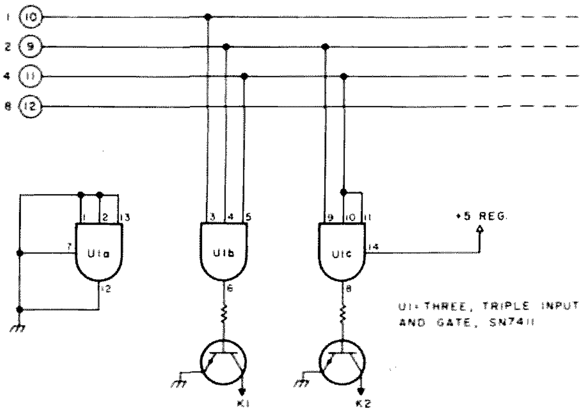

Fig. 3. Alternate logic circuit for perfectionists.

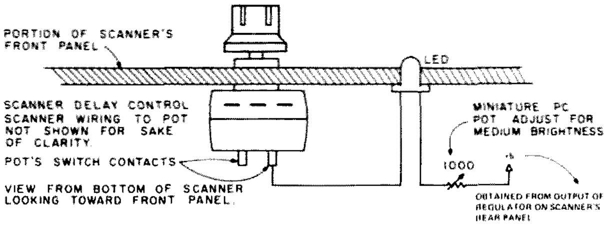

Fig. 4. Scanner OFF-ON indicator. Recommended LED: Radio Shack subminiature LED (276-042). Its ratings are 1.6 V at 20 mA. Actual size and ratings aren't important; what is necessary is that the LED you choose must have an opaque lens so that it can be viewed from any angle and also illuminate the SCAN-HOLD switch.

For what it's worth, I might add that the scanner's BCD outputs are TTL compatible only. CMOS gates would not trigger in this circuit. Otherwise, the parts are not critical at all.

It is uncanny to see the scanner doing the offset switching chores automatically every time the rig's MHz readout changes back and forth between 146 and 147. This mod also works when the scanner is switched from PROGRAM to 1 MHz. Now the rig is controlling the auto-offset switching when the scanner is on.

First, the scanner searches and finds, and you latch it to a desired repeater. All you have to do now is squeeze the PTT and fire away. Your eyes stay on the road, without further wear and tear on your fingertips and repeater offset switch.

Another Modification

Quite a few delighted owners of this scanner have expressed the desirability of seeing, at a glance, whether or not the scanner is controlling the rig's frequency. Here it is in Fig. 4, with all the electrical details.

I drilled a 1/8-inch hole in the front panel about 3/8 of an inch to the left of the SCAN-HOLD switch and inserted the tiny LED from behind. A micro-drop of Super Glue™ holds it in place. Contact cement also works well. Now, day or night, I can easily see when the scanner is ON. The tiny LED also illuminates the SCAN-HOLD switch in the dark. Handy, eh?

All inquiries sent with a self-addressed stamped envelope will be gladly answered. ■

Tweaking Your Linear

—the right way to tune it

A. J. Massa W5VSR
Box 6075
New Orleans LA 70114

Did you know that many manufacturers' recommended tune-up procedures for grounded-grid linear amplifiers are misleading and, if followed to the letter, may cause your potentially "linear" amplifier to be not linear at all? The types of grounded-grid linear amplifiers which I refer to are the Heath SB-200 and SB-220, Den-Tron 160-10L, Yaesu FL-2100B, Drake L-4B, Collins 30L-1, Henry, Swan, etc., as well as some of the older Hunter Bandits, Tempos, and Hammarlunds. I have either owned or had experience with all of these, plus a few home-brew amplifiers.

To illustrate my point, I will use the Heath SB-220 as an example of a typical modern Class B grounded-grid amplifier. It is probably the best value in amplifiers on the market today, and it is capable of all the power the law will allow (and then some). It is efficient and relatively "clean" *when tuned and operated correctly*.

The important specifications of the SB-220 are as follows:

- Driving power required—100 Watts
- Maximum power input—SSB: 2000 Watts PEP; CW: 1000 Watts; RTTY: 1000 Watts
- Duty cycle—SSB: continuous voice modulation; CW: continuous (maximum key-down 10 minutes); RTTY: 50% (maximum transmit time 10 minutes)

Although output power is not specified by Heath, it can be expected to approximate 1200 Watts PEP SSB and 600 Watts CW-RTTY when correctly adjusted for maximum legal power input for those respective modes. These are reasonable expectations for commercially-built grounded-grid linear amplifiers, as well as many described in the *Radio Handbook* (Editors and Engineers) and *The Radio Amateur's Handbook* (ARRL).

Caution! Heath's specifications look innocent enough, but they may be misleading already. "Driving power required— 100 Watts." Add "maximum." "Maximum power input—SSB: 2000 Watts PEP; CW: 1000 Watts; RTTY: 1000 Watts." Add "PEP" after "CW: 1000 Watts" and after "RTTY: 1000 Watts." You see, PEP and key-down CW or RTTY are *the very same*. That is, the peak envelope power of a kilowatt CW signal is 1000 Watts. Isn't it logical then that 2 kW PEP SSB should be the same as 2 kW key-down CW? It is logical, and it is correct.

A very useful feature of the SB-220 is a front panel switch marked "CW-Tune/SSB." It permits the selection of either 3000 V dc (for high power SSB) or 2000 V dc (for CW, RTTY, lower-than-maximum power SSB and *initial* tune-up), ensuring optimum plate load impedance and efficiency for the two power levels, 2 kW and 1 kW. *It is impossible to correctly adjust a grounded-grid linear amplifier for clean, efficient operation at the 1 kW level and operate it at the 2 kW level. Likewise, it is impossible to correctly adjust it at the 2 kW level and operate it efficiently at the 1 kW level.* In the latter case, the amplifier will be linear as all get out, but it will not be efficient.

In a very comprehensive article on this subject,* William I. Orr W6SAI (Manager, Amateur Service Division of EIMAC) said, "To achieve 2000 Watts PEP input (usually assumed to equal 1000 Watts under voice conditions), the amplifier *must be tuned* and loaded at the 2000 Watt level, unless some rather sophisticated test equipment is at hand." I really don't know what

*Orr, William I. W6SAI, "A Grounded-Grid Two-Kilowatt PEP Amplifier," *Ham Radio*, February, 1969.

sophisticated test equipment Bill referred to, but I can think of one manufacturer's amplifiers which can be properly tuned and loaded at an input level *lower* than maximum rated power. Those are the Collins 30L-1 and 30S-1. They incorporate a simple, inexpensive, and effective comparator circuit which allows proper adjustment of the amplifiers at about one-fifth maximum power level. I don't understand why other manufacturers don't put this same feature in their amplifiers. If you want to add it to yours, it is described in *Amateur Single Sideband* (originally published by Collins Radio Company, now available from the Ham Radio Publishing Group, Greenville, NH 03048).

Look now at Heath's specification, "Driving power required—100 Watts." There it is, plain as day, 100 Watts. If only Heath had added "maximum," some of us wouldn't find ourselves driving a nail with a sledgehammer—trying to jam 200 Watts, 335 Watts, or (ugh!) 470 Watts into an amplifier which requires only one hundred Watts of rf to drive it actually past the legal limit. The 200, 335, and 470 Watts figures are what you can expect to come out of exciters like the Drake TR-4, Swan 500, and Swan 700, respectively.

If the amplifier requires only 100 Watts of drive, what do you suppose happens to the extra hundred to four hundred Watts? I've heard that it's passed through to the antenna. I really don't think so. What I think happens is that it simply overdrives the amplifier, beyond its legal limits, and quite likely causes an excessively broad, distorted signal—"flattopping," if you will.

"But you can always turn down the microphone gain on these super-power exciters and keep from overdriving them," you say. "Nay, Nay!" say I, especially if you want to maintain an optimum peak/average power ratio and take advantage of the benefits of your exciter's ALC feature. By turning down the microphone gain to the point where you will not exceed 100 Watts PEP output, you will never reach the power level in your exciter where ALC begins to control peaks. You might as well turn off the amplifier and talk the exciter up to its rated limit. Your signal will be louder.

Another disadvantage of the turn-the-mike-gain-down technique is that the carrier suppression and noise figures of the exciter will deteriorate.

Heath's instructions say, "Tune your exciter for full CW output at the desired frequency," nothing more. If full CW output is between 90 and 120 Watts, more or less, you're in good shape. You're in good shape, too, if full output as indicated on an output meter coincides with the dip in plate current. If it doesn't, tune the exciter for maximum output instead of plate current dip (really, you should neutralize those final tubes). What Heath doesn't say is that if full output from your exciter is much in excess of about 120 Watts—200 Watts or more, for example—you run a good chance of overdriving the amplifier, running illegal power, flattopping, distorting, having an unnecessarily broad signal, shortening the life of those expensive power triodes, splattering, generating excessive harmonics, and maybe even being cited by the FCC for at least one of the above violations. Horrors! The least the manual could have said is that if your exciter puts out much more than the required 100 Watts, you should swamp down the output with a suitable attenuator network.

Don't get the idea that I'm picking on Heath and the SB-220 exclusively. I like the SB-220. I have one and therefore am most familiar with it. I realize that Heath expects us hams to have enough good sense and expertise to use their instructions as a general guide, and not as the "final" word. But a lot of us do sometimes follow instructions to the letter. And I realize that Heath used to produce an excellent station accessory, the SB-610 monitor scope (with two-tone generator). I know that every ham who uses a kW or multi-kW amplifier should have and use a minitor scope, but Heath's has gotten so expensive, and they left out the two-tone generator. By the way, don't be surprised if, within the next year, another relatively inexpensive scope/2-tone generator hits the market at less than $100.

I have operated, or at least read the manuals for, the following manufacturers' linear amplifiers—Collins, DenTron, Drake, Heath, Henry, Hunter, Swan, and Tempo—and all are capable of being improperly adjusted if the manuals are followed to the letter. This is understandable, as it would be practically impossible for each manufacturer to give exact instructions for proper operation of its amplifier with every possible exciter/amplifier combination. Also, some exciters are simply incompatible with most commercial amplifiers; they are just too powerful to drive amplifiers which require only 100 Watts drive or less.

So, what is there to do? Read the manual for your amplifier thoroughly and follow these tips. I'm sure that your amplifier, operators on adjacent frequencies, and those on your frequency who are trying to understand what you are saying will appreciate it.

1. Use an exciter that is power-compatible with your amplifier. If you already have a super-power exciter, ask the amplifier manufacturer to provide you with the circuit for a suitable swamping network.

2. Tune up your amplifier to the power level at which you will operate it. If you have a 1 kW PEP amplifier, tune it for 1 kW key-down. If you have a 2 kW PEP amplifier, tune it for 2 kW key-down.

3. Don't try to see how high you can make the meters fly on voice peaks. The right plate current meter peak is usually about one-half of maximum current with key-down. Higher peaks don't mean stronger signals, just more distortion and splatter.

4. Get, and use, a scope to monitor your transmitted signal, preferably one which will display a trapezoidal pattern. Even an ordinary bench scope will do, but "Christmas Trees" are harder to interpret for linearity than are trapezoids.

5. Practice tuning your exciter and amplifier using a dummy load, so that the final finishing touches on the air will take but a few seconds. And remember that unless your antenna shows vswr of 1:1 and the input to your amplifier shows vswr of 1:1, finishing touches of amplifier and exciter adjustments (key-down) should be made.

6. Limit key-down time to 10 seconds or less. If you don't think that 10 seconds is a long time, hold your breath for 10 seconds.

May your expensive PA tubes and plate transformers last forever! ■

Clay Welsh W1PI
220 Glen Oak Road
Springfield MA 01129

CB to 10

—part XII: convert a Kraco PLL rig

When a CB transceiver gets down to $20 or $30, it's time to consider buying one for use on 10 meters. Like many others, I did just that. After looking over the many rigs available in the $30 class, I decided to tackle the Kraco Model KCB-2310B. The main reason for selecting this rig was its phase locked loop synthesizer, especially since most of the conversion articles I had been reading usually advised the reader to stay away from rigs with PLL because of the complexity of the conversion. To a certain extent, those articles are correct.

In any event, once I had purchased the rig, I set out to learn as much about phase locked loop circuitry as possible. Not having had much need for this information before, I was extremely ignorant in this area. I am most grateful to George R. Allen W1HCI for his excellent article, "Synthesize Yourself," in the October, 1977, issue of *73 Magazine*. This allowed me to familiarize myself with the basic operation of the PLL circuit and understand its operation.

When I began looking at the schematic diagram of the unit, one thing became immediately apparent. I wasn't going to learn much by looking at it, and, besides that, it was too small. So I trotted down to my neighborhood electronics parts distributor and purchased *SAMS Photofact CB-153*, November, 1977. Although this does not have the Kraco Model KCB-2310B, it does have the 2320B, which is identical except for a Delta-Tune selector.

After many days of examining the new schematic and block diagram of the circuit, I began wondering if I had bitten off more than I could chew in attempting this conversion. I just couldn't make heads or tails of what was happening inside the PLL chip, an NPC 7624 (ECG 1167 is listed as a substitute). Endless on-the-air conversations failed to enlighten me very much more. I am, however, grateful to WB5HVV and many others for their many suggestions and comments.

Finally, when things began to look their blackest as far as the conversion was concerned, I saw a little light on the horizon. While browsing in a local Radio Shack, I came across the National Semiconductor *CMOS Databook*, and in it was a circuit for a CB transceiver PLL. After examining the application data for their MM55114 chip, I concluded that this chip and circuit description looked very similar in appearance to the one in my Kraco.

The Kraco, like the circuit in the *Databook*, uses a 3-crystal setup. It uses a 10.240-MHz crystal for the reference oscillator, a 10.695-MHz transmit mixer, and a 11.8066-MHz offset generator. For our purposes, we can forget the first two crystals and concentrate on the third. This 11.8066-MHz oscillator is the key to the circuit's conversion.

The frequency range for the conversion I selected was that recommended by the 10-10 International, Inc., in its *Fall Bulletin*. The frequency to be covered by AM rigs is from 28.760 through 29.050 MHz. Simply put, replacement of the 11.8066-MHz crystal with a 12.4047-MHz crystal and realignment of the transmitter and receiver, plus the synthesizer's vco (voltage-controlled oscillator) output circuit, will be all that is necessary to put your Kraco 2310B or 20B on ten meters.

For those of you who are interested in the "how it works" aspect of the PLL, I will cover that in greater detail at the end of the conversion.

The frequency-determining factor for the circuit is the 37-MHz output from the unit's vco. In normal 11 meter operation, this output is heterodyned against a 10.695-MHz transmit crystal for output on 27 MHz. The vco output is from 37.6592 MHz for channel 1 through 37.9492 MHz for channel 23. It is our intent to raise the output of the vco by 1.795 MHz. This will raise the vco to 39.4542 through 39.7442 MHz. This, in turn, gives us coverage from 28.760 to 29.050 MHz.

Although a frequency counter would be a definite plus, the station receiver, transmitter, dummy load, VTVM, and rf probe were all that was really required in the way of test equipment. My Drake TR-3, keyed into a dummy load, was used for realignment of the Kraco receiver. The Drake's receiver section was used to align the synthesizer upon completion of the conversion.

The first step in the conversion is to apply power to the CB transceiver, turn to channel one, and check test point #8 (one side of R-113) for 1.5 volts dc. A switch of the channel selector to channel 23 should change the voltage to about 2.7 volts. Switching to the blank position on the channel selector will cause the voltage to change to approximately 5 volts. It is important to observe that these voltages vary as you change from channel 1 to channel 23 and that this voltage is the controlling voltage for the vco. We will come back to this test point in a moment.

The next step is to replace crystal X101 (the 11.8066-MHz crystal) with a 12.4047-MHz crystal. This is an HC-18/U crystal holder and the tolerance is ±.001 percent. Once the crystal has been installed, you will observe that the dc voltage at TP #8 jumps to 5 volts, regardless of the position of

the channel selector. Turn the rig again to channel 1 and adjust vco-output transformer T-101 until the voltage begins to drop. Generally, this requires turning the slug in a clockwise direction. Continue adjusting this slug until you read 1.5 volts at TP #8. This indicates the vco is functioning correctly, and rotation of the channel selector will again indicate a gradual increase. This nearly completes the vco alignment. Attach an rf probe to TP #3 and adjust T-111 for maximum. If the output is too low to measure here, attach the probe to the collector of Q-108 and again adjust T-111 for maximum. This completes the vco alignment.

Having completed the synthesizer adjustments, we now turn to the receiver. With a signal generator (or in my case, my Drake transceiver), provide a receive signal at approximately 28.9 MHz. I loaded my Drake into a dummy load (lightly) and adjusted T-104 and T-105 for maximum S-meter reading on the Kraco. This required a couple of turns and completes the receiver alignment.

With a dummy load connected to the Kraco, attach the rf probe to the collector of Q-110 (xmit mixer) and adjust L-103 and L-104 for maximum rf out. Move the probe to the base of Q-111 (xmit buffer) and adjust T-102 for maximum. Again check and adjust L-103 and L-104 with the probe still connected to the base of Q-111. Next, attach the probe to the collector of Q-111 and adjust T-103 for maximum. By this time, you should have enough rf to see output on your power or wattmeter. With the probe at the antenna connector, adjust L-106, L-109, and L-110 for maximum output. On my rig, it was about 4½ Watts.

Turn the channel selector to channel 4. With the station receiver tuned and calibrated to 28.8 MHz, key the Kraco into a dummy load and adjust CT-101 until the output of the rig is exactly 28.8 MHz. I found the rig to be within 2 kHz prior to this adjustment. This completes the conversion.

For those of you who are wondering how the Kraco's synthesizer works, let me say this. First of all, I am not an electronics engineer and I may not be totally accurate in my description of what is going on internally within the PLL chip, but I feature it to be happening like this: The 10.240-MHz output from the reference oscillator is internally divided by a 1024 oscillator/divider which outputs a 10 kHz signal to the frequency detector. This, by the way, establishes the 10-kHz spacing for the vco. The vco is being controlled by the frequency detector. Its output is approximately 39.455 MHz. This signal is mixed with the output of our 12.4047-MHz oscillator's third harmonic of 37.215 MHz (rounded off for convenience). The resultant 2.240-MHz signal is fed to the PLL's programmable divider (divide by 224 through 250), where in this case it is divided by 224. This 10-kHz output is also fed to the frequency detector causing the vco to lock on 39.455 MHz. The channel selector changes the programmable divider, and changing it to a new channel will cause the signal fed to the frequency detector to be more or less than 10 kHz. This will vary the vco output until the input signals again match, and a new locked condition is met. For more information, I refer you to page 4-25 of the *CMOS Databook* by National Semiconductor.

I hope this information is of some use to anyone considering converting their Kraco to ten meters. I know I had a lot of difficulty finding information about such conversions. The majority of information was garnered from *73 Magazine*. ■

Allan S. Joffe W3KBM
1005 Twining Road
Dresher PA 19025

Tuned Circuits In Your Junk Box

—making do with what's on hand

Reading the mail can be fun, bring back memories, and also provide the impetus to put some thoughts down on paper. This is the result of a conversation overheard recently on two meters. The point in discussion was what to do if you want to duplicate a piece of gear that requires tuned circuits and your available parts do not match up with the parts list.

The two groups of values in Table 1 will provide a kickoff point.

What is shown by the two groups of values points to the ease of scaling LC values so that you can produce a tank that will tune to the frequency of your choosing. The fundamental rule if you want to keep the same frequency of a given tank but change the relative LC values to fit what is on hand is shown by the middle line of each example. That is, if you multiply one value of the tank by a given factor and divide the other tank value by the *same* factor, then the resultant tank will tune to the same frequency as that of the original tank circuit.

Another thing that becomes painfully obvious from the above example is just how powerful an animal the picofarad can be if unrealistic values are chosen.

It is obvious, if you wanted to design a six meter LC circuit, that the figures in example B would be much easier to handle in terms of tuning rates, not to say ideally, but much closer to the ball park than the values in A (even though the median values in both groups tune to the same frequency.

A further use for the concept of scaling would be handy if we had used the median values in example B for six meter work and wanted to scale these values upward to provide a starting point for a two meter tank circuit. Since we realize that values at 144 MHz are going to be substantially smaller than at 50 MHz, let us start with the median values in example A (1 uH and 10 pF).

All we have to do is take a ratio of the new frequency to the old frequency. We divide 144 by 50.329, which gives us approximately 2.861. We then divide the LC values of the six meter tank by this ratio and our tank now tunes to 144 MHz. The resultant values are 0.350 uH and 3.5 pF.

Here again a correction is called for in order to get the C value up to a readily obtainable component. Once again we can scale our components in the direction desired. Let us arbitrarily pick a scaling factor of four and multiply the C value by this factor. Then, in order to keep the frequency of the tank where we want it, we must divide the L value by the same factor.

The new values are approximately 14 pF and 0.88 uH, which are values that we can find in the average junk box or flea market sale.

While we are still up on two meters, it is once more interesting to note the power of the picofarad. If you put this tank into a home brew super-regen, you would hit the band all right, but a change of *one* picofarad would swing the tank frequency from 144 MHz all the way up to 149.35 MHz. This makes a very convincing case for the good vernier dial and the bandset/bandspread method of tuning any piece of VHF gear.

If we drop down into the low frequency bands, life becomes a bit simpler. Perhaps the commonest scaling question here is what tuning range can be expected from a 100 pF tuning condenser when it is hooked up with an inductance of about 20 uH. A bit of calculation will show the above tank to hit in the area of 3500 kHz. The answer here is found in the fact that the tuning range varies as the square root of the tuning capacity. Thus, if your capacitor is 10 p

	uH	pF	Frequency MHz
A	1	9	53.052
	1	10	50.329
	1	11	47.987
B	0.1	99	50.583
	0.1	100	50.329
	0.1	101	50.079

Table 1.

minimum and 100 pF maximum and you neglect stray circuit capacities, your ratio of maximum to minimum capacity is 10 and the square root of 10 is 3.16. This means that your tuning range would be 3500 kHz times this factor, 3.16, or 11.06 MHz. Thus, your tank would tune from about 3500 kHz to about 11,000 kHz (11 MHz).

The 20 uH inductance value can be calculated according to the usual formula or, once again, we can illustrate another use of scaling from known data.

Notice in the median values in example B that a value of tuning capacity of 100 pF is specified, which is the same value we had on hand to construct our low frequency tank. We can scale the inductance information needed as follows.

First we make a ratio of the frequency of the known tank divided by the frequency of the desired tank. This would appear as 50.329 over 3.5. Always make sure in setting up your ratios that you do not mix MHz with kHz or the results will be less than desired due to decimalitis. The ratio in this case is approximately 14.38. This ratio factor is then squared and multiplied by the original inductance values. 14.38 squared is about 206, which, when multiplied by the original L value of 0.1 uH, gives you your new value of about 20 uH.

These little scaling kinks can make life a lot easier if your data on hand does not fit the frequency of immediate interest. You can manipulate known good LC data all over the lot very easily. The two words "about" and "approximately" are used to denote that calculator answers with eight places to the right of the decimal point were rounded off as they serve no real purpose in our little corner of the world. That's what trimmers are for! ■

DX

from page 18

Walvis Bay

The United Nations Security Council has recommended that Walvis Bay be made part of independent Namibia, formerly Southwest Africa (ZS3), but left the final decision to be worked out between Namibia and South Africa. South Africa refuses to give up control of Walvis Bay and compares the situation to asking the U.S. to give up Alaska because it is closer to Canada than to the U.S. Work them when you hear them, but don't expect any decision on the DXCC status of Walvis Bay until after WARC 79. The same goes for S8 and H5.

QSL INFORMATION

C31MJ to EA3MS
C31MK to EA3WZ
C31MS to EA3MS
D68AF to K5YY
DA1GR/OHØ to Box 395, APO New York 09611
FØCH/FC to HB9TL
FØALZ/FHØ to K5YY
FB8ZM (see text)
FH8CY to Box 50, Island of Mayotte, Comoro Islands
ID9ON to I3ON
JD1YAK to JA1KSO
KM6BI (see text)
OH6DX to OH8RC
PYØRO to George Hintz, 37 Easy Street, Sudbury MA 01776
SL1FRO to SM5AHK
TF6M to Box 1058, Reykjavik, Iceland
TZ6ET to DL7SS
VE3FXT/S8/H5/etc., to George Colins, PO Box 431, Cambridge, Ontario, Canada
VK9YS to F6CYL
VP2EEK to KP4KK
VP2LBH (see text)
VP2LFL to WB8ZRV
VP2VEN to K5GOE
YI1BDG (see text)
ZE8JJ to K9UIY
ZK2AP to WØJRN
ZK2TT to Box 22572, Tel Aviv, Israel
3B6DA to 3B8DA
3B8YY to K5YY
5W1BN to KH6JEB
6O1FG to I2MPQ, Pietro Ambrosia, Via Stradella 13, 20129 Milano, Italy
4X3ØCJ to 4X4CJ
9V1TE to WØTKJ

Thanks to the *West Coast DX Bulletin* for much of the above information.

Ham Help

My hearing loss is in the 1500 to 2000 cycle range (near ny XYL's voice box). Sometimes it's a comedy outine watching me purchase an item, if the clerk asks a question or makes a recommendation. You can imagine ny concern about getting on he airwaves with people who iave a little different accent han ones I'm accustomed to. ve read in *73* and *QST* about a umber of people with handiaps much, much more severe nan mine. Although they are ispirational, these articles do ot solve my particular problem.

How can you help? Well, let ne give you an example. I ought an MFJ CWF2BX filter or my Kenwood 820S. It vorked fine (cut out a lot of side oise), but I was forced to wear arphones all the time. This n't good if it can be avoided y most people with some hearing loss. MFJ accepted the CWF2BX (because it was new) on a trade, and I upgraded for a 721 which drives a speaker. Now I'm wondering what speaker will be right for my ears. As I progress in hamdom, I'm sure this will be a minor problem because I will understand more about reading the specifications of equipment and relating them to my particular problem. Not so, today—I'm green as Wayne is Green and need all the help I can get. The manufacturers and distributors know their products and, as widespread as the hearing problem is, must have many hard-of-hearing working for them. They could save themselves a lot of problems (returns and complaints) by offering a "blip" of some kind to the hard-of-hearing in their advertisements.

I've taken lip reading courses and seminars of all kinds to stay up with the "norms." It ain't easy! The most pathetic part is to see some folks become recluses or shun unknown areas because of this minor defect. Does anyone have any suggestions to help me out?

Charlie Kline WDØDJP
1307 S. Lincoln
Longmont CO 80501

Our repeater group is interested in purchasing a G.R. Stephen Company Model 1A-220 linear amplifier.

Allen Communications, N.E., from Chester, Conn., used to handle this amp about 2 years ago, but now we can't seem to get ahold of anyone at Allen.

We also tried to get a phone number and/or address of the G.R. Stephen Company, but so far we haven't had any luck.

We would appreciate any info on either company so that we might be able to purchase this amplifier.

Dave Strickler WA3THB
323 S. 3rd Ave.
Lebanon PA 17042

Has anyone had experience in converting a Bendix Model IV14CA or similar 2-way radio to amateur service? Any information would be appreciated.

Paul Combs AA4NL
PO Box 176
Langley KY 41645

I need the following back issues of *73 Magazine* to complete my collection: January, March, April, August, 1976. I will pay the newsstand price plus postage, if they are in good condition. *73* is out of stock of these.

Thomas Cooper
PO Box 386
Temperance MI 48182

I just bought a used Heathkit SB-303 receiver and an SB-401 transmitter, and I would like to know if anyone knows about any articles published about this gear in the past seven years.

Tony Castaner KZ5TC
PO Box 834
Albrook AFS
Panama Canal Zone

Alan C. Merrill W1FYR
339 Tanglewood Estates
Keene NH 03431

Support Your Local Fire Chief

—hams and the safety services

We hams often feel that the public safety services don't ever need communications assistance from the ham fraternity because of the very sophisticated radio systems now in use by the fire and police departments. Not so, friends! For example, on September 17-18, 1977, the Meadowood County Area Fire Department in Fitzwilliam, N.H., hosted a fire training school for all of New England. Over 1400 fire fighters attended the two-day school, which was sponsored by the New Hampshire Association of Fire Chiefs. A number of different locations were used, including the Meadowood Drill Yard and Fire Stations in Fitzwilliam, several buildings at Keene State College, and two other locations in Keene for pump courses. In all, 27 pieces of fire apparatus were deployed in the area.

As can be well imagined, communications could be a real problem with such an elaborate program, in view of the fact that the fire frequencies had to be kept free for emergency traffic. To add to the problem, several pieces of fire apparatus were on frequencies not used in the local area, and were therefore unable to communicate with the local dispatch center or with other equipment.

Alan W1FYR on an HT with an oil pit fire burning in the background.

WR1AHO, "The Keene Machine" (147.975-375), was used to coordinate the entire affair and to handle the non-emergency traffic, thereby freeing the fire frequencies for emergency traffic. K1XR, WA1UNN, and W1FYR were deployed in the area with base stations and portables. The repeater coverage was excellent, with all course sites easily covered with handie-talkies, even though the locations were some 15 miles apart.

The Keene Machine is located on Hyland Hill on the border of Keene and Westmoreland, at approximately a 1500' elevation. The machine runs about 65 Watts to a 5.2 dB gain

antenna on a 125' tower. The machine has emergency standby power and a commercial autopatch, which has been modified by WA1UNN to its present excellent condition. The autopatch allowed us to keep in touch with the local dispatch center, and with monitors on the local frequencies, the crew was able to coordinate all activities with almost no confusion or errors. The members of the New Hampshire Association of Fire Chiefs were unanimous in their praise for the excellent and very professional job done by the repeater and its crew.

Amateur repeater groups should explore this area of public service further if they have not already done so. There are many areas in public safety where a 2 meter repeater and a well-organized crew with handie-talkies can be of real and significant assistance to fire and police departments. CB has sometimes left a bad taste in the mouths of many public officials, so the amateurs may have to do a selling job to get a foot in the door. (Once in, though, let's not flub it!) Two meter repeaters are a natural for this type of public service, particularly if the machine has an autopatch and auxiliary power. In a disaster situation, this is obvious. Hopefully, the repeater group will set up some type of plan to first offer its services, and then to fill the need. It might also pay the group to explore the areas of need from a communications point of view. Not only can repeaters be used in a disaster, but also, as the Meadowood Fire School so aptly illustrated, they can be used on a fairly regular basis for other major "non-disaster" situations.

One area that should be explored in certain parts of the county is "overload" on the fire (and perhaps police) frequencies. Chief Clayton Higgins of the Concord, New Hampshire, Fire Department related an instance where, because of a particular set of circumstances, 37 calls came into their central dispatch center within a 20-minute period, with, among other things, two 2-alarm brush fires. Not necessarily a disaster situation, but a real problem! Because of the tremendous overload, the fire frequencies were useless except for local truck-to-truck communications. What a natural for two meter repeaters! A few HTs at the right places (with a chief or other officer at some of the larger fire scenes) and an avenue of communication would be established between the central dispatch and the field.

Our own fire and police central dispatch covers all of Cheshire County, N.H., and parts of Vermont and Massachusetts. There are over 30 fire departments in this excellent system. The frequencies available to them are adequate for "normal" loads, but should there be a disaster or just a set of circumstances such as Concord experienced, it would severly overload the existing frequencies so that communications would be virtually impossible. We feel that the Keene Machine could be used as an alternate link for high priority "White Hat" (chiefs') traffic. It might just "save the day" some day!

Many groups of communities have a central dispatch system with a limited number of frequencies. Repeater groups should certainly explore the possibility of assisting when the existing frequencies are overloaded, and the same groups should make some plans to enable them to get into action with the least amount of hassle.

We are needed, folks! We can be of real value if we sell ourselves and then are willing to follow through and do a professional job. The impact on the community from the point of view of public relations is tremendous! Let's not miss the boat— we need all the goodwill we can get. Furthermore, it can be a lot of fun for the participants, as we all found out at Meadowood. ■

Pumpers at Meadowood (Bowker Pond) supplying water for the practical sessions.

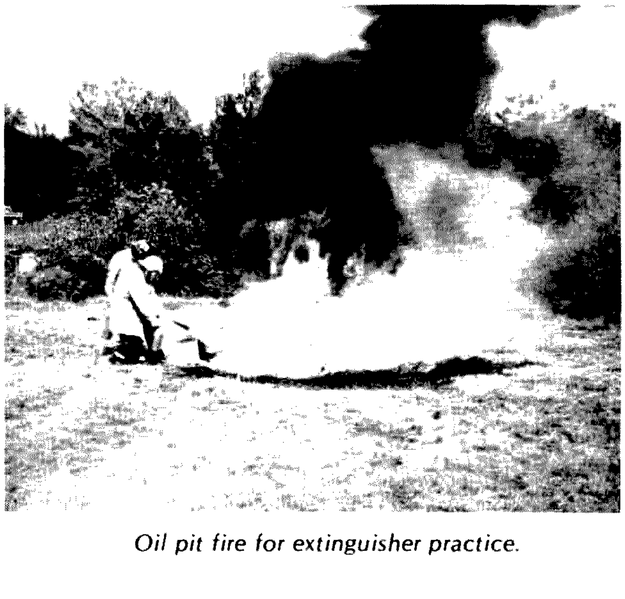

Oil pit fire for extinguisher practice.

John M. Blalock W7AAY
3054 West Evans Drive
Phoenix AZ 85023

Improved Scanner for the VHF/One Plus

—a $4.00 mod does it

The Tempo VHF/One Plus is a fine two meter FM rig. Synthesized from 144 to 148 MHz with 25 Watts power, it can be used on SSB with the SSB/One adapter. The one feature that decided it for me, though, was the built-in 1 MHz scanning feature. The One Plus has two buttons on the microphone that can single step the digitally displayed frequency 10 kHz per step, up or down. If the buttons are held down, the frequency changes at a rate of approximately 200 kHz per second.

Since my One Plus scanned a little fast for me, I adjusted the 50k pot, R2, on the scan board to slow it down. I slowed it down even further by replacing C1 on the scan board with a 2 uF capacitor in place of the original 1 uF.

I still wasn't completely happy with the scan system, however. The scan unit must be turned off to use the two programmed or MARS channels. Also, when the scan function is turned off, it does not retain the selected frequency when turned back on. I wanted to be able to use the local/remote switch to select between two channels, one selected by the front panel switches and the other selected by the scan circuitry.

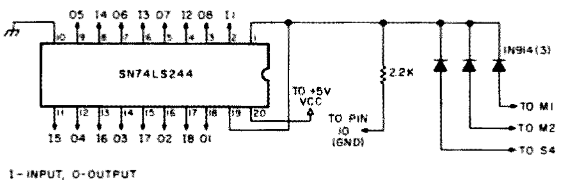

Fig. 1(a). SN74LS244 wiring. Connect all SN74LS244 inputs (I1 through I8) to the original anode connection points of CR1 through CR8 on the scan board. Connect the corresponding outputs (O1 through O8) to the original diode cathode connection points (closest to edge of scan board). Build on 0.6 x 1.4 inch .100 inch perfboard. The SN74LS244 is available from Tri-Tek, Inc., 7808 N. 27th Ave., Phoenix AZ 85021, for under $3.00.

The modification described below provides this feature. The programmed channels can also be used with either setting of the local/remote switch. Parts required are three 1N914 type diodes, a 2.2k ¼-Watt resistor, and a single SN74LS244 integrated circuit. The 244 contains eight non-inverting buffers with tristate outputs which are put into the third or open state to disable the scan function. Originally, the One Plus removed power from the scan circuits to disable them, thus also losing the selected channel.

Build the 74LS244 circuit per the schematic, Fig. 1(a). I built it on a small piece of .100 inch perfboard which fits in the area of CR1-8 on the scan board. Two-inch jumper wires were connected to the buffer inputs and outputs, 5-inch jumpers to GND and Vcc, and 10-inch ones to the 1N914s.

Remove the four bolts that hold the scan board to the plate on which the speaker is mounted.

Remove diodes CR1 through CR8 on the scan board.

Connect the eight buffers of the 74LS244 in place of the diodes with the buffer inputs wired to the original diode anode connection points and the corresponding outputs wired to the original diode cathode points.

Connect Vcc and GND of the IC to the scan board +5 V and GND terminals.

Route the three wires connected to the 1N914 diodes up to the front panel area.

Connect one of these wires to the M1 bus on the main board and another to the M2 bus. These are the buses to which the anodes of the programming diodes are soldered.

Remove the local/remote switch, S4. Remove the green and the white/green wires attached to the switch section located toward the center of the One Plus. Connect them together and solder both to the originally unused terminal on the same switch section.

Connect the third 1N914 wire to the now vacant center terminal of the switch. Connect the third terminal to ground (I soldered it to the switch body).

Reinstall S4 and the scan board, making sure that the 74LS244 board and wiring are in such a position that you don't have to worry about shorting.

Believe me, it's not much harder to do than it is to describe. I'm really pleased with the operation of this modification in my VHF/One Plus. I can now go off a fixed frequency, scan for a clear channel, return to the original frequency, and QSY to the selected channel very easily. Also, I can switch back and forth between repeater inputs and outputs (or any other two frequencies) by just using the local/remote switch. If you have a VHF/One Plus, I'm sure you'll also find this modification worthwhile. ■

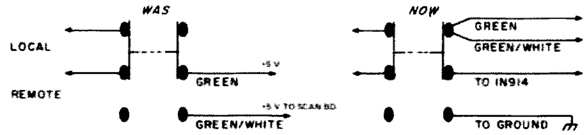

Fig. 1(b). Local/remote switch wiring changes.

New Products

from page 14

Order by mail, or call toll-free (800)-647-8660. *MFJ Enterprises, PO Box 494, Mississippi State MS 39762.*

Morgan W. Godwin W4WFL
Peterborough NH

ICOM IC-502 6 METER SSB PORTABLE TRANSCEIVER

To get reacquainted with 6 meters after being off the band for the past few years, I have recently gotten into the habit of keeping an Icom IC-502 portable SSB transceiver on the living room coffee table occasionally checking the band for activity during TV commercials, and, now and then, for longer periods when there have been interesting skip conditions. Over the past three weeks or so, I have heard several dozen stations in ten states ranging from Florida in the south to Missouri to the west, as well as three Canadian provinces and the Caribbean. All reception has been with the built-in telescoping whip antenna and while the rig has been sitting on the coffee table.

On transmit, the IC-502's three Watts PEP has produced excellent signal reports from several stations within a range of thirty to forty miles. Connected to a beam or even an outdoor dipole, the rig should be capable of producing plenty of DX contacts when the skip is in. CW operation is possible by simply plugging a key into the front panel jack and placing the mode switch in the CW-T position.

While designed as a portable rig, the IC-502's i-f noise blanker, RIT, S/RF meter, VFO, CW capability, and other features make it an excellent choice for fixed-station operation as well. The unit is powered by nine C-cell batteries or an external 13.8 V dc source. For fixed-station operation, Icom's IC-3PS not only supplies power for the IC-502, but also doubles as a stand and holder for the IC-50L ten-Watt linear amplifier.

Frequency coverage of the IC-502 is 50 to 51 MHz and rf power output is 3 Watts PEP on USB and 3 Watts on CW. Controls and connections are tuning knob, RIT, mode switch, noise blanker switch, volume, function (power on/off, dial light), external speaker jack, key jack, mike connector, S/RF meter, external antenna receptacle, external power supply jack, and mike hanger. There is an LED power indicator that shows when power is on and serves to indicate battery condition.

With its solid construction, compact size, and quasi-military appearance, the IC-502 makes an attractive, rugged, and handy unit for portable and mobile operation that also lends itself to fixed operation, particularly when used with the IC-3PS power supply and IC-50L linear amplifier.

The Icom IC-502 is priced at $249.95. Distributed by *Icom West, Inc., Suite 3, 13256 Northrup Way, Bellevue WA 98005 and Icom East, Inc., Suite 307, 3331 Towerwood Drive, Dallas TX 75234.*

Morgan W. Godwin W4WFL
Peterborough NH

HEATH ANNOUNCES NEW LOGIC PROBE FOR TTL AND CMOS TESTING

Heath Company, world's largest manufacturer of electronic kits, has released the IT-7410/ST-7410 logic probes which are designed for in-circuit testing of TTL and CMOS integrated circuits. Features include switch selection of threshold levels for either TTL or CMOS circuitry and lamps that turn on when the input voltage crosses the appropriate level. A memory circuit is incorporated in the design of the unit to turn on an LED when either threshold level is crossed.

The manufacturer points out that the new probes provide true logic level detection at high frequencies (not ac coupled) and that it will detect pulses as short as 10 ns. Upper frequency limits are 100 MHz (TTL or CMOS @ 5 V dc square wave) and 80 MHz (CMOS @ 15 V dc square wave). Power for the logic probe is drawn from the circuit under test via two spring-loaded insulated clips. A ground lead is provided for high frequency operation. Probe overload protection is 50 V dc continuous and 175 V dc for 5 seconds. The IT-7410 is the kit version while the ST-7410 is the assembled version. The two are otherwise identical.

For more information about the new logic probes, send for your free copy of the latest

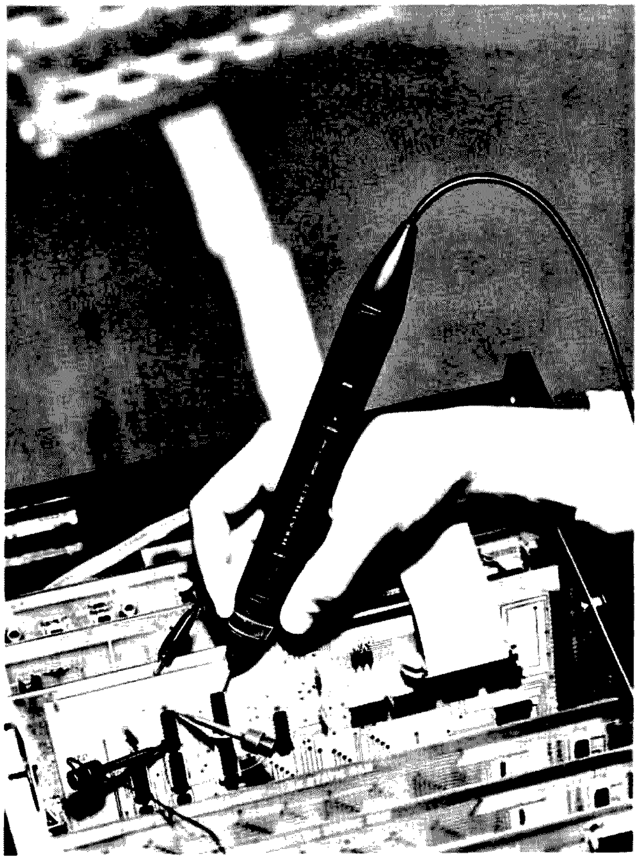

Heath's new logic probe for TTL and CMOS testing.

Heathkit catalog. Write *Heath Company, Dept. 350-690, Benton Harbor MI 49022.*

MP2 VHF WATTMETER

Mirage Communications has entered the amateur radio market with the introduction of the MP2 VHF wattmeter.

The MP2 is designed to provide the VHF amateur with a versatile instrument to insure optimum performance from his VHF station.

The MP2 will work from 50 to 200 MHz. The MP2 measures power in three ranges, 50, 500, and 1500 Watts full scale. The MP2 displays power, either as average, for FM or CW, or peak reading, for SSB.

Swr may also be measured with as little as 2 Watts of power and is displayed directly, without having to use charts or graphs. The swr and peak reading features have not been available on a single instrument before.

The coupler unit may be remotely mounted for added installation convenience.

For further information, contact your local dealer or *Mirage Communications, PO Box 1393, Gilroy CA 95020, (408)-847-1857.*

HI PRO COR-IDENTIFIER

This complete all-on-one board fully adjustable COR and identifier is designed to mate easily with any repeater system. The board consists of high quality components familiar to the industrial and medical industry.

Some of the features are the normal high and low inputs to the COR, another input which can be connected directly to the squelch noise amplifier, and LED outputs to monitor the COR timer and the ID. The LED for the ID blinks in unison with the code program. Plugs are installed on the board for ease of installation and removal. Unique to this board are the provisions for installing anywhere a switch which controls the resetting of the COR timer on either the input or the output, or disabling the timer to allow the repeater to operate without timing out, avoiding cutting short a message during an emergency. This is accomplished with one single-pole, double-throw center-off switch. Another feature provides for a switch that will allow either all or partial scanning of the diode matrix. CMOS logic is used, and can be operated from 8 to 16 volts with very low current drain—a thing to think about when on emergency power. Potentiometers are used liberally on the board for ease of adjustment—no need to juggle components to get the right setting. Wide spacing of diodes on the matrix makes it very easy to program and reprogram in the field with less chance of solder bridges and shorting. All this plus the normal control functions associated with a COR and identifier comes completely assembled. *Maggiore Electronic Laboratory, 845 Westtown Rd., West Chester PA 19380.*

DIELECTRIC INTRODUCES THE SNIFFER®

Dielectric Communications announces the introduction of the model 7004 Sniffer®, a non-directional, adjustable-amplitude, rf signal-sampling element designed to permit convenient sampling of a high-power rf signal at a level more convenient for spectrum analysis, frequency counting, or oscilloscope display. The unit is inserted into the Dielectric model 1000 rf wattmeter or into an auxiliary line section designed for use with the 7004. It may also be used with many other popular rf wattmeters and line sections.

The Sniffer exhibits extremely low vswr and insertion loss, and can be used over the 2-1000 MHz range at power levels up to 1000 Watts. Rf output sample is adjustable ±8 dB around a nominal −43 dB. The standard range of field-interchangeable Dielectric quick-match connectors may be used on the auxiliary line section for quick and easy installation with any connector system already in use.

The Sniffer is available alone or together with a line section. Delivery time is 2 weeks after order. *Dielectric Communications, Raymond ME 04071.*

60-CHANNEL ICOM-22S SWITCH

Valley Instrument Products offers the IC-22S60, a 60-channel switch for the Icom IC-22S 2 meter transceiver. The IC-22S60 gives your IC-22S full channel capabilities with 56 channels from 146.01-146.43, 146.61-147.39, and 147.60-147.99 MHz programmed into the switch plus 4 user-programmable channels. No need for all those diodes!

Installation is easy. The IC-22S60 replaces the IC-22S switch exactly. All you do is remove the 22-channel switch and install the IC-22S60, supplied with the new dial, and wire into your diode matrix board.

The IC-22S60 gives you full channel capabilities with your IC-22S for just $25.00. Why pay more for bulky, complicated encoders? *Valley Instrument Products, Division of Nevins Communications, PO Box 339, Bartlett IL 60103.*

Morgan W. Godwin W4WFL
Peterborough NH

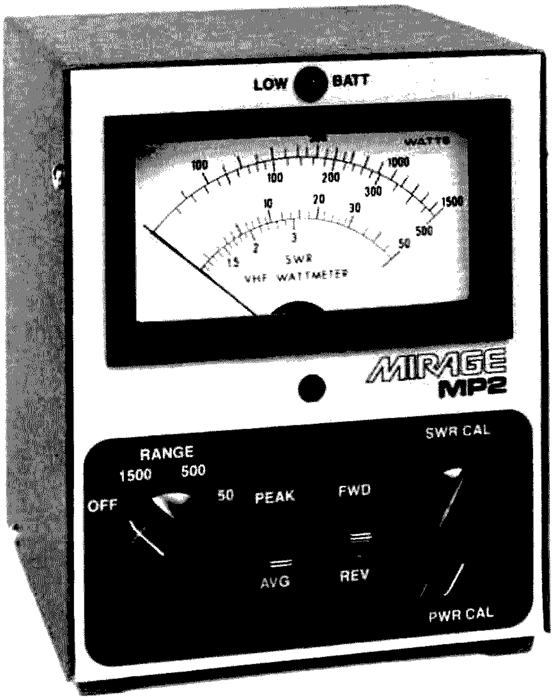

The MP2 VHF wattmeter from Mirage.

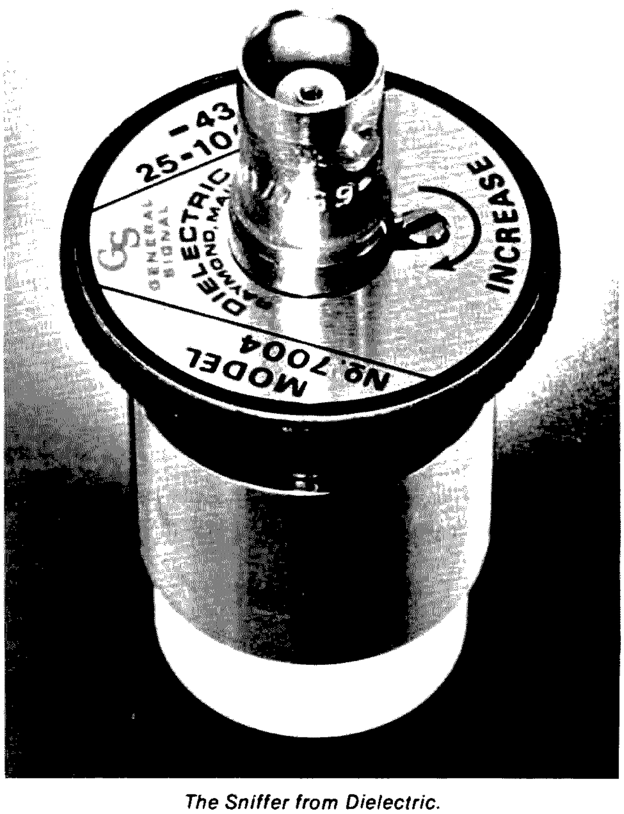

The Sniffer from Dielectric.

The Elemek LXK standard frequency receiver.

The MICROMONITOR from American Crystal.

A NEW STANDARD FREQUENCY RECEIVER

A new standard frequency receiver from Elemek, Inc., accurate to better than 1 part in 100 billion, provides a time code source and is priced below one hundred dollars.

The Elemek LXK is fixed-tuned to 60 kHz to receive WWVB, the official NBS Primary Time and Frequency Standard broadcast station located at Fort Collins, Colorado. The LXK functions as a phase-lock receiver, utilizing the WWVB accuracy of 1 part in 100 billion. Day-to-day deviations of the transmitted frequency are less than 5 parts in 1,000 billion.

Three BNC output connectors provide the user with the 60 <Hz WWVB carrier signal, a 100 <Hz signal phase-locked to the NWVB carrier, and the demodulated WWVB time code. All output signal levels are at 9 volts peak-to-peak and square wave.

The Elemek LXK will operate rom 115 V ac, 60 Hertz, or 9/12 / dc. Circuitry is effectively shielded by the small 4½" x 1½" x 6" steel cabinet. Front-panel controls consist of a single on/off power switch and he two LED indicators to display power on/off and the tate of the phase lock.

Other LXK performance eatures are: 1 uV signal sensitivity, 100 dB maximum signal gain, 90 dB agc range, and a 200 Hertz bandwidth.

The Elemek LXK comes completely assembled and ready for use. A warranty of parts and labor is covered by Elemek for one full year from date of purchase. Delivery is ten days to two weeks, prepaid in U.S.A.

Elemek, Inc., will also market the LXK as a kit to be assembled by the user, and as a PCB assembly for OEM customers wishing to incorporate the standard frequency receiver directly into their own equipment designs.

Elemek, Inc., is a central New York based company active in developing and producing electrical, electronic, and mechanical products for the military and Industrial markets. Distribution is accomplished directly with clients and customers. *Elemek, Inc., 6500 Joy Road, East Syracuse NY 13057.*

REVOLUTIONARY NEW PLL PROGRAMMER

The American Crystal Supply Co. announces their new MICROMONITOR PLL control unit, the only device specifically designed to provide all of the features demanded by amateurs for serious 2 meter FM operation. Essentially a hand-held unit, the MICROMONITOR is designed to plug into a transceiver and remotely take control of all frequency control elements. Normal operation of the transceiver resumes automatically whenever the MICROMONITOR is unplugged or turned off.

MICROMONITOR features include direct channel or frequency entry, channel or frequency display on both transmit and receive, five user-loadable memory channels, and one manual and two automatic scanners. The scanners can be programmed to search up or down in frequency and for either busy or clear frequencies. The popular repeater pair 146.34/.94, designated HELP, Is selectable at a keystroke. Any repeater split (user-programmable) and reverse pair operation is provided, as is automatic simplex in simplex portions of the band.

Now available in models for use with the Kenwood TR-7400 and TR-7500, Tempo VHF 1 Plus ICOM IC-22S, Yaesu FT-227R, Drake UV-3, and other popular transceivers, the MICROMONITOR PLL control unit retails for $189.95. *American Crystal Supply Co., PO Box 638, West Yarmouth MA 02673, (617)-771-4634.*

Morgan W. Godwin W4WFL
Peterborough NH

ANEMCO RADIO FREQUENCY INTERFERENCE ENCLOSURES

When electromagnetic energy from sources external or internal to electrical or electronic equipment affects that equipment adversely by causing it to have undesirable responses, such as degraded performance or malfunctions, the electromagnetic energy is called electromagnetic interference or EMI, and the adversely affected equipment is said to be susceptible to EMI. EMI may leave a source or enter susceptible equipment by conduction, coupling, or radiation. Interference may occur between one part of the equipment and another, as between a power supply and nearby circuitry.

EMI is conducted via signal lines, antenna leads, power cables, and even ground connections, between EMI sources and EMI-susceptible equipment. It is coupled between components, circuits, or equipment having some mutual impedance through which currents or voltages In one circuit can cause currents or voltages in the other circuit. The mutual impedance may be resistive, capacitive, inductive, or any

Continued on page 279

D. C. Mitchell WB3BUU/8/K8UR
13356 Wabash St.
Milan MI 48160

A Perfect Power Supply?

—well . . . almost

Here is a cheap but very adequate way to obtain 5 to 15 regulated volts without zapping your wallet.

Output regulation is typically on the order of .1 volts for loads from a few milliamps to 4 Amps or so, depending on the components used. This circuit is very noncritical and easy to get going. With it, just about any reference voltage may be had. The only requirement is that the unregulated dc voltage supplied to the regulator circuitry must be a few volts greater than the reference voltage of the zener. That only makes sense, doesn't it?

The transformers I used were two 6.3-volt filament junk box specials with the primaries connected in parallel for 110-volt primary voltage. 220-volt primary may be used for wiring primaries in series. Caution must be used to keep the phasing correct. If you get no output, change the pairing of wires in the primary.

With the full-wave circuit described in Fig. 1, the unregulated output should be about 17 volts or so. This should be adequate for the regulation of 12 volts.

If you want 14 or 15 volts regulated, you may need to increase the unregulated voltage to the regulator circuit. A full-wave bridge should do this.

However, the pass transistor (or Darlington, whichever you decide to use) will run cooler with the lowest possible unregulated voltage on it to maintain good regulation. To determine what is adequate, try the full wave first and measure the regulated voltage output. If it varies more than a volt on full load from the supply, an increase in the unregulated voltage is needed and a full-wave bridge should be used.

U1, the op amp, can be any type of 709, 741, etc. It is operating with essentially an open-loop gain, and its job is to bias the Darlington or pass transistor. When the unregulated voltage wants to drop, the noninverting input referenced by the zener diode and the inverting input of the op amp "see" a difference voltage and amplify it, supplying the base additional bias which enables Q1 to amplify more and hold the regulated output constant by pulling the voltage back up.

The reference voltage in the noninverting input of the op amp is determined by the zener reference. I use a 12-volt zener and a regular silicon diode, connected as illustrated in the schematic (Fig. 2).

The pair gives about 12.6 volts as a reference — 12 volts for the zener and about a .6 drop across the silicon diode. The zener alone could be used for just 12 volts, or more diodes could be used for .6-volt increases for each additional diode used with the zener.

C1 is any old filter capacitor — the more capacity, the better. And, of course, it is rated for at least the unregulated voltage.

Q1 is the main factor in determining the current that can be taken from the supply. The larger the maximum collector current of Q1 is, the more the current that can be taken from your machine. A Radio Shack power Darlington (TO-3 case) for $1.98 was used, and the supply is good for about 4 Amps. With a high-gain power Darlington, the output of a 741 is all that is needed to drive it. If more current demand is required, a larger Darlington or regular power transistor can be used. However, if the beta of the transistor is fairly low, a driver is needed between the 741 and the pass transistor. Just about any PNP transistor will do. It should be connected as shown in Fig. 3.

If lots of current is wanted, say 10 Amps, a large pass transistor is needed. Pass transistors this large typically have betas of 60 or less, which will require a driving current of about 1/6 Amp, which is far too much for the 741 and most other op amps. Therefore, a driver transistor with a high gain (beta) should be used to allow the small output of a 741 or similar op amp to drive anything.

If the op amp heats up to the touch, a drive transistor should be used. Q1 should be well heat sunk, and, of course, the transformer used should be capable of handling whatever current you want at the load.

C2 is a .001 to help keep any rf out of the regulator if the supply is to be used for your 2m radio or the like. If used with digital projects, a 10 uF filter capacitor can be placed across Z1, if noise is a problem, and/or a slightly smaller R1 used to move Z1

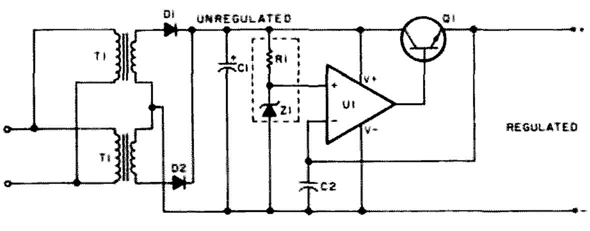

Fig. 1.

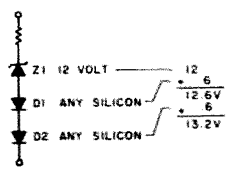

Fig. 2.

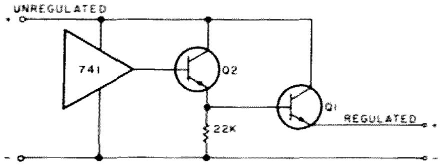

Fig. 3.

Parts List

T1	6.3 V filament transformer or equivalent
D1, 2	about 50 piv at desired current, plus 50%
C1	20 to 20,000 uF, 25 volts
R1	470 to 820 Ohm, ¼ Watt
Z1	12 V zener, or desired value from 2.4 to 33 volts
U1	741, 709, etc., op amp
Q1	power Darlington or 100-Watt or more pass transistor, NPN
Q2	any PNP: 2sc710, etc.
C2	.001 uF, 50 V

from the knee region where noise occurs.

This circuit was built because I had problems with the straight pass transistor concept. The bias on the transistor must be changed to maintain good regulation for various load currents. The circuit described in this article is the first that I have seen that does not regulate in only a segment of the pass transistor's operating curve, but regulates well everywhere — from no current to maximum smoke from the pass transistor.

Typical circuits, as described in the *ARRL Handbook*, using the pass transistor idea cover 6 to 10 Amps, for example, but suffer from poor regulation. ■

Mobile Security Blanket

—remote control for older rigs

Tom Yocom WA1RTD
21 Bayberry Rd.
Acton MA 01720

One way to solve the problem of mobile radio theft is to mount the radio in the trunk. This idea isn't new. Remember that many of the old commercial radios of 20 years or more ago were designed for trunk installation—probably due to their size more than to avoid theft. A Motorola T43GGV is certainly a lot larger than the new solid-state dash-mount rigs of today!

If you have a favorite repeater or simplex frequency that you enjoy being confined to, you can take an older radio such as a Regency HR2 and rather easily remote-control the basic transmit/receive functions. Frequency changes and squelch adjustments will require a trip to the trunk.

I mounted an HR2 in the trunk and then used a standard 500-series touchtone™ desk-style telephone set (equipped with a new handset which included a push-to-talk button) as the control head. This approach provided more than just a long extension of the microphone and speaker. The telephone included the pad required for autopatch operation, and the whole phone could be unplugged and stored in the glove compartment when not needed.

A surplus Motorola speaker enclosure is installed under the dash and equipped with a pilot light, switch, and volume control. The switch is used to control power to the remote transceiver. The telephone provides keying, a microphone, a touchtone pad, private listening (if desired), and speaker muting (removing the handset mutes the speaker). This feature can be suppressed via the exclusion switch. You might want to reverse the logic so that the exclusion switch turns the speaker off for those few times when you want to be semiprivate.

Fig. 1 is a general block diagram and shows the approach that was used. The interface circuit changes the telephone two-wire circuitry into a four-wire circuit (one pair of wires for transmit and another pair for receive) and mutes the speaker when the telephone handset is picked up. The speaker box houses the local speaker and also provides a convenient place for mounting a local volume control, power on/off switch, and fuse.

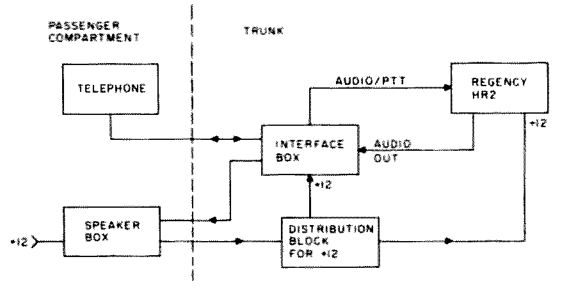

Fig. 1. Block diagram of system.

Fig. 2 shows the speaker box schematic. There are no critical components. Use a good communications speaker that will accept the full audio power from the receiver without distorting. The size of the pilot light depends upon where you plan to mount the speaker box. If the lamp is too bright, it can be very annoying at night.

Fig. 3 shows the interface unit and the important parts of the telephone. The transformer is a 120H telephone repeat coil. The small power supply (a battery could be used) provides a source of direct current for the telephone (about 50 mA). The .33 uF capacitor allows the audio signal to bypass the power supply. The two primary wires from the telephone (red and green) are attached to two of the windings, the audio for the transmitter is derived from the third winding, and receiver audio is applied to the fourth winding. If the transceiver has a high input impedance, use the 50k resistor and shielded

cable—otherwise omit the 50k resistor and use any convenient cable.

Audio is applied to the speaker when the relay is turned off. The relay is operated (thus interrupting the audio to the speaker) when the handset is lifted. This action can be inhibited by operating the exclusion switch, which has a normally-closed pair of contacts connected in series with a pair of extra contacts of the hook switch. You can use any 12-volt relay in the circuit.

Fig. 4 details the small regulated power supply. If you have to purchase the parts new, you might elect to use a couple of D cells in series. If you have a well endowed junk box, you can build the power supply, and it will occupy less room, enabling a smaller box to be used for the interface unit.

The output of the pad will generally be much higher than the level of your voice. One solution to this problem is to swamp the pad when any button is depressed. The desired effect can be accomplished by connecting a resistance across the R and C terminals on the telephone's network. If you use a 100-Ohm fixed resistor in series with a 1k trimpot, the desired level for the pad can be set by adjusting the pot.

I have experienced good results with this trunk-mounted arrangement. Just set the transceiver volume control to near maximum and adjust the squelch control for normal operation. There has been no theft problem—and, if you're content to monitor one frequency, it works just fine. If you're determined to remotely control the frequency, you might consider an Icom IC-22S equipped with a set of remote frequency-programming switches.■

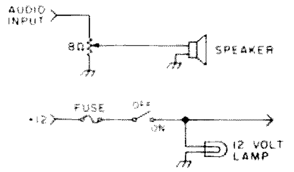

Fig. 2. Speaker/power control box mounted in passenger compartment.

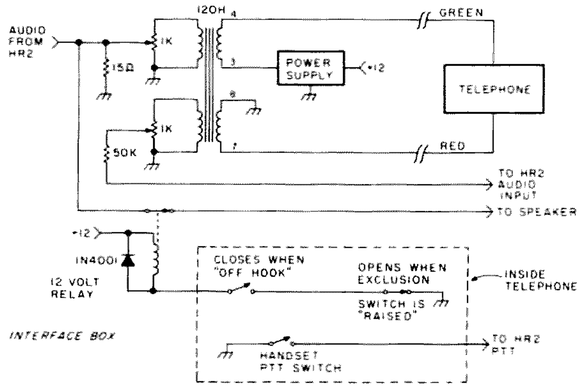

Fig. 3. Interface unit and associated circuits.

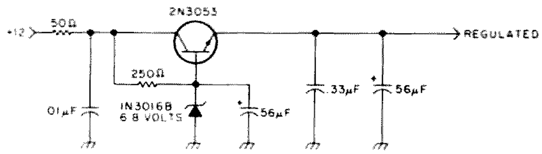

Fig. 4. Power supply schematic diagram.

Ray Bishop W6WUT
Box 1086
Downey CA 90240

Further Adventures of the IC-22S

—our hero gets offset flexibility

Here is a way to add offsets to the Icom IC-22S 2m transceiver beyond the standard 600 kHz offset. This can even be accomplished without defacing the transceiver in any way.

Some repeaters on 2 meters have input-to-output frequency differences that are not 600 kHz. If you want to use one of these repeaters and own an IC-22S, a modification must be made. The solution is found in the way that Icom controls the programmable divider and the receive-to-transmit changeover. I was motivated to find this solution by the existence in my area of repeater WR6AMD (formerly WR6ABE). This repeater has a 147.435 MHz input frequency and a 146.400 MHz output frequency, or an offset of 1.035 MHz.

The concept outlined here is applicable to any offset within the limits of the IC-22S programmable phase locked loop (PLL). The limits are any two frequencies from 146.010 MHz to 147.990 MHz in 15 kHz increments. Unlike the regular IC-22S operation, you do not have to worry about being out of the band using this circuit when it's programmed at 147.405 MHz and above, with the duplex/simplex (DUP/SPX) switch in the DUP B position (which adds 600 kHz more to the programmed frequency). The only operating restriction with this modification is that you won't be able to conveniently work simplex (direct). I do not mind this restriction. I have found limited use for the simplex frequencies that I do have programmed, and I have no need to operate on a repeater frequency direct.

How It Is Done

In the IC-22S, there are some positive voltages available for the solution proposed. These are the 9 volts that is present when the transceiver is on and is available through the channel switch to the diode matrix (+9 V and SW 9 V), the positive voltage present only during receive (RX 9 V) which drops to nearly zero volts during transmit, and the positive voltage (TX 9 V) available during transmit which drops to nearly zero during receive. These last two voltages are at the DUP/SPX switch with RX 9 V at the DUP A position and TX 9 V at the DUP B position. The channel switch has no wire at position 23 (more about this later), and detent 24 is an off position with the wiper arm of the switch on itself. Therefore, the +9 V goes nowhere.

For the sake of demonstration only, add a single-pole, double-throw or double-pole, double-throw (DPDT) switch and wire it, as in Fig. 1, between two rows of diodes and the two positive voltages at the DUP/SPX

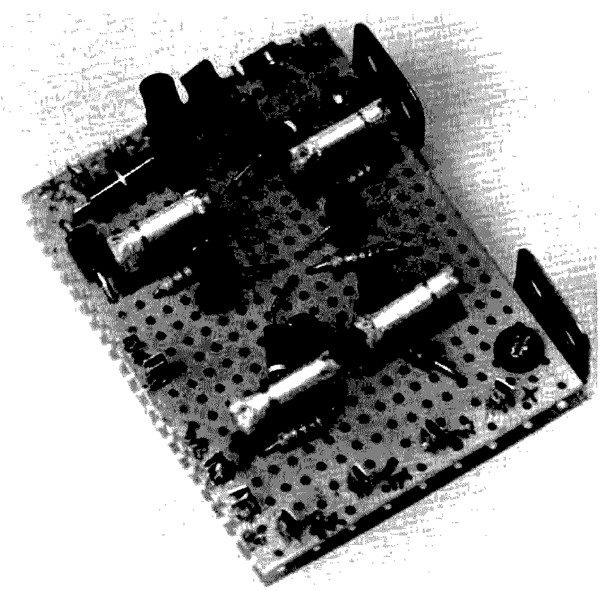

Circuit assembly using 0.1-inch perforated board.

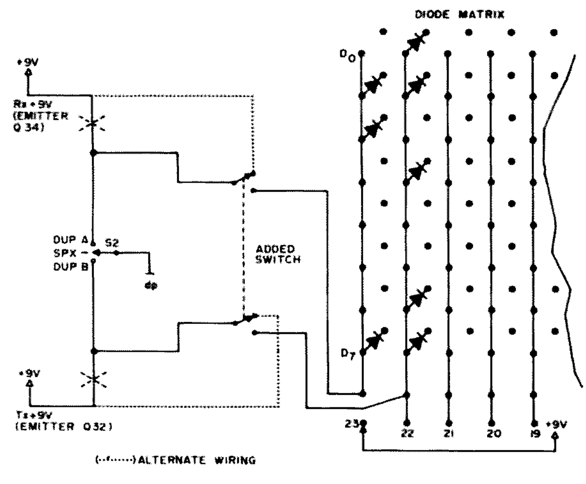

Fig. 1. Basic concept. Not a practical circuit, since the duplex/simplex switch must be in the SPX position, the channel switch must be in detent 23 or 24 (off), and the added switch must be off for all other channel positions to operate properly. A DPDT switch would allow disconnecting the duplex/simplex switch function but would leave all other possible errors.

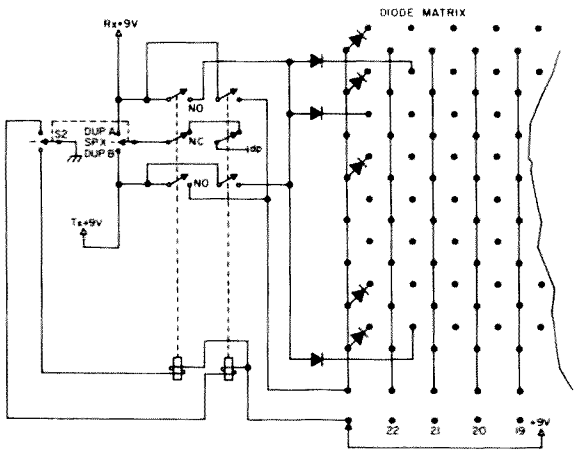

Fig. 2. A relay solution with frequency pair reversing and 600 kHz offset function disconnect. Without the reverse pair feature, a single DPDT relay would be enough.

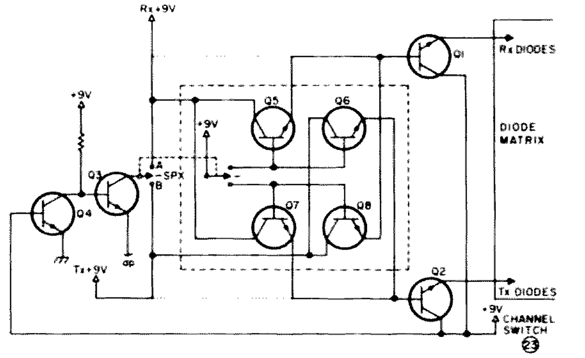

Fig. 3. Simplified diagram of the solid state version. The dashed lines enclose the optional frequency pair reversing circuitry. Q1 — receive frequency diodes activation; Q2 — transmit frequency diodes activation; Q3 — regular +600 kHz offset activation; Q4 — regular +600 kHz offset disconnect; Q5 — receive voltage to Q1 in the DUP A position; Q6 — transmit voltage to Q2 in DUP A position; Q7 — receive voltage to Q2 in DUP B (reverse) position; Q8 — transmit voltage to Q1 in DUP B (reverse) position.

switch (RX 9 V and TX 9 V). You would then have any receive and separate transmit frequencies the diodes could program, as long as the channel switch was in position 23 or 24. However, this is too simple to be practical. There would be too many cockpit errors possible, such as the channel switch being in a wrong position, the DUP/SPX not being in the SPX position, and, of course, the added switch not being off when using the regularly programmed channels. The concept of Fig. 1, however, does demonstrate the basic approach based on RX 9 V causing a receive set of diodes to control the transceiver frequency and TX 9 V causing a separate set of diodes to take over when the push-to-talk switch is closed. This is instead of the normal operation of routing these voltages to pin "dp" of the duplex control circuit through the DUP/SPX switch, causing the logic to add exactly 600 kHz to the programmed frequency in either the DUP A or DUP B positions (receive +600 kHz or transmit +600 kHz, respectively).

Icom's Generosity — No Need to Add Switches

You can take advantage of the unwired position 23 on the channel switch and of the fact that half of the DUP/SPX switch is not used. Position 23 can be wired, for example, as in Fig. 2 to activate relays. To avoid some cockpit error, a set of the relay contacts can be wired to disconnect the +600 kHz offset function of the DUP/SPX switch. Also, wiring the SW 9 V from position 23 of the channel switch through the unused half of the now disabled DUP/SPX switch to a second relay will allow reversed frequency pair operation. A single DPDT relay is enough if reverse pair capability is not desired. This solves most operating concerns but leaves the problems of relays. Relays have problems of physical dimensions, mounting arrangements, power drain, and mechanical contacts. My hookup doesn't have miniature relays; miniature relays cost a lot. I used semiconductors to eliminate the relay problems.

A Better Solution

Positive voltages forward bias NPN Darlington transistors. Darlingtons in saturation act like closed switches and, with the base grounded or the collector voltage removed, act

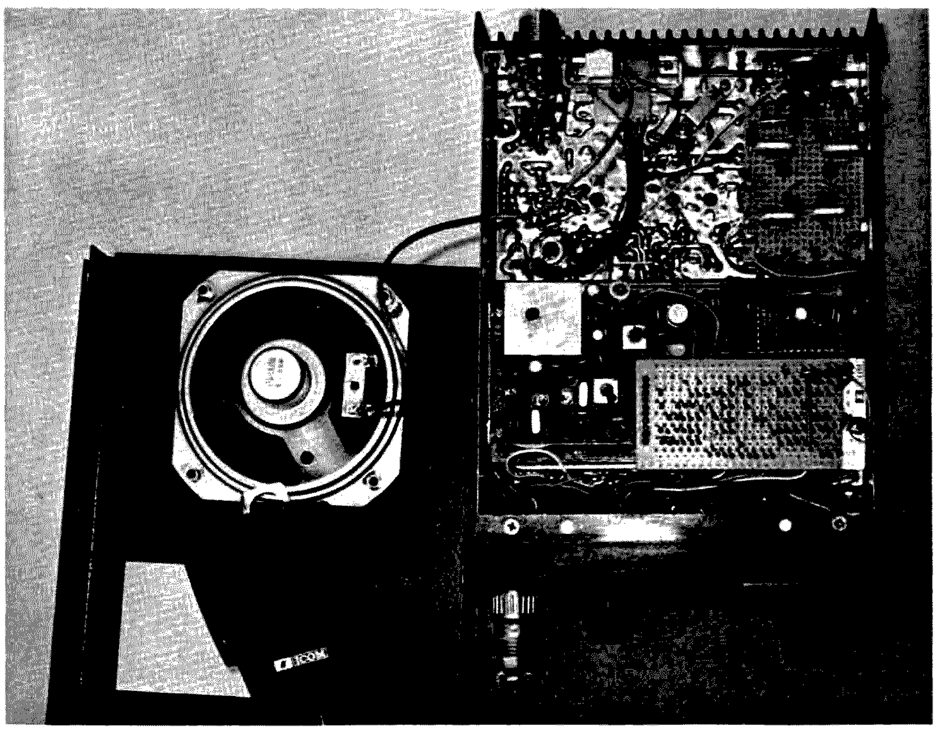

Assembly installed in Icom IC-22S.

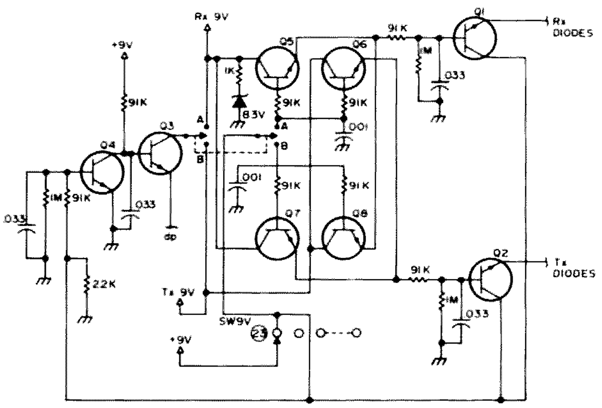

Fig. 4. Complete circuit as installed at W6WUT. Q1 through Q8 are 2N5306s.

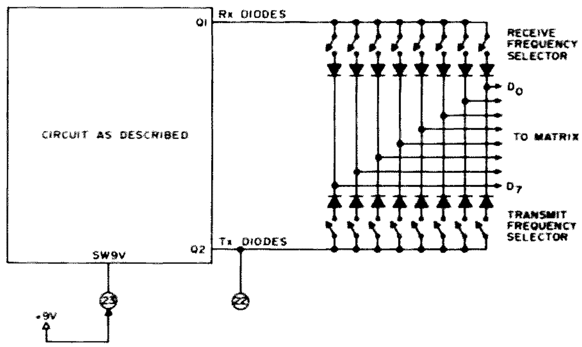

Fig. 5. External frequency programming embellishment.

like open circuits. Putting these characteristics together with the positive voltages of the Icom IC-22S leads to the diagram of Fig. 3. In this figure, Q1 supplies the voltage to the receive frequency determining diodes and Q2 the voltage to the transmit frequency determining diodes. Q5, 6, 7, and 8 are boxed in to show that they are optional. They are the DPDT function for reversing the frequency pair. I operated for several months without them and only occasionally missed the ability to listen on the input of WR6AMD to find out if I could copy someone direct. Q3 and Q4 are the regular +600 kHz offset disconnect feature that is necessary in order to avoid operator error. If wired without the reversing capability (which uses the other half of the DUP/SPX switch), the DUP/SPX switch is completely out of the circuit. It won't matter what position you leave it in while operating in the nonstandard offset channel.

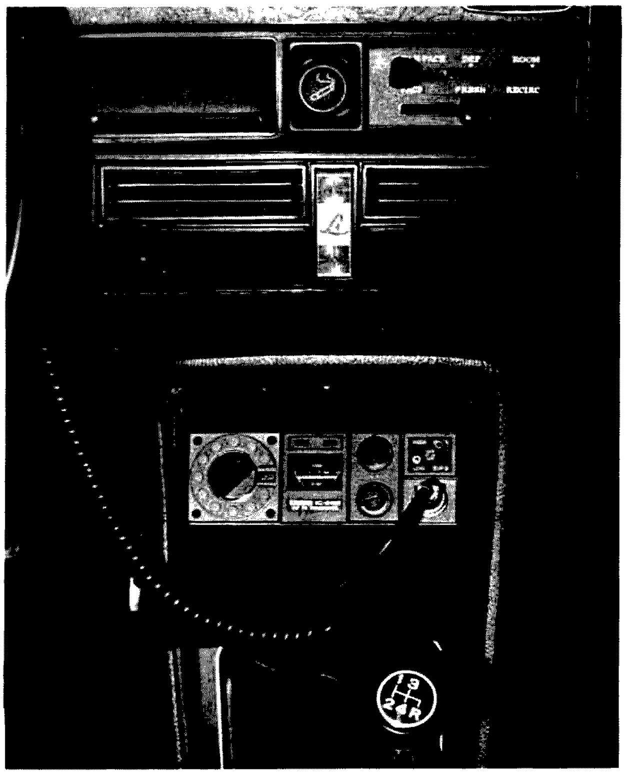

IC-22S installed in center console of Subaru.

Actual Circuit

Fig. 4 is my complete circuit with nominal values shown. None of the values is particularly critical. The 2.2k resistor on the switched 9 V line to Q4 was found necessary because of a small positive voltage present even with the channel switch in other positions. This voltage was enough to forward bias Q4 all the time, causing the DUP/SPX switch to be disabled at all times. The zener diode and 1k resistor may not be strictly necessary, but, since the RX voltage tended to rise to as much as 13.6 V when not loaded by the duplex control circuit (dp), I felt more comfortable with it pegged at approximately 9 volts. The base bypass capacitors are there to prevent the rf environment of the transceiver from biasing the Darlington transistors and can be almost any convenient size. The range of .005 to .05 uF should be all right. As for the transistors, any NPN Darlington around should work for Q1 through Q8. Mine are all 2N5306s.

Embellishment

For those who insist on the ultimate and don't mind adding outboard devices, only one more wire than the nine already required will allow switching any pair of frequencies in at any time. This selection of separate receive and transmit frequencies can be combined with the diode switching method proposed by others, as shown in Fig. 5. Eight additional diodes and another switch or set of switches for selecting the added frequency are necessary at the outboard device. One channel switch position (such as 22) can be used for transmit frequency selection with regular +600 kHz offset operation, with a second channel position (such as 23) for the independent receive and transmit frequency selection feature.

Could you want more? You have all 21 predetermined frequencies, a fully programmable channel with standard offset, and an independently programmable receive and transmit frequencies channel. That's quite a bit for just one more wire brought out of the transceiver than what many IC-22S owners are bringing out now. As for me, I am satisfied not to have holes, added-on switches, or other visible signs of modification. Besides, my transceiver slides neatly into my '73 Subaru wagon center console as if it were made for it. Switches or cables or connectors sticking out of the top, sides, or bottom would interfere with this delightful coincidence of dimensions.

Construction

If care is taken, there is enough space under and to the side of the speaker. I mounted my circuit assembly on the side of the case be-

tween the PLL board and the accessory socket at the rear of the transceiver. The speaker can be rotated to get the lead lugs out of the way, if necessary. I remounted it so the lugs are toward the opposite (coax) side of the transceiver. A board approximately 40 mm (1-9/16 in.) by 65 mm (2-9/16 in.) will be a bit crowded but should be sufficient. A couple of small angles can mount the board with 4-40 screws, so the screw heads will not show with the bottom cover in place.

I strongly recommend that the speaker leads be replaced with longer, more rugged wire. Also, the wire bundle to the diode matrix board should have the spot ties cut off so that the fine stranded wires used by Icom will not break as readily during handling. The new added wires for the circuit assembly can go under the PLL circuit board. The only empty lug on the channel selector switch is the one for position 23.

The voltage for Q3 can be found several places, one of which can be traced from the end pin of the PLL board to the diode matrix board connector. The diode matrix board column 23 can be either your receive or transmit set of diodes, with the other set formed by soldering the cathodes of the diodes in any conveniently open holes of the correct row and then tying all their anodes together. This common anodes connection is then treated as a column and wired to the emitter of the appropriate control transistor (Q1 or Q2) of the added circuit assembly.

I am sure there are other and more exotic solutions – perhaps using FET or CMOS or TTL devices. However, the circuit described draws very little current, is voltage level tolerant, is rugged, and is inexpensive. In my opinion, the IC-22S is a good buy as is. Now, with a little effort, it can be even more flexible. ■

from page 265

combination of these. Conductive coupling frequently manifests itself as common-mode interference through a ground return used in common by two circuits.

EMI is radiated through openings of any kind in equipment enclosures (hatches, drawers, and panels), and through imperfect joints in the enclosures. It may also be radiated from leads and cables leaving a source, or picked up by leads and cables entering a susceptible device.

EMI sources may be natural or man-made, and the man-made sources may be intentional (e.g., radar transmitters) or unintentional (e.g., ignition systems). Natural sources of EMI include terrestrial and extraterrestrial sources. Since natural sources cannot be controlled, EMI from such sources can be reduced only at the susceptible equipment. Terrestrial sources include the ionosphere, or charged layers of atmosphere, lightning discharges, precipitation, and sand and dust storms. All of these produce atmospheric noise, the intensity of which varies with locations, season, and time of day. Extraterrestrial sources include the sun, which produces solar noise, the galaxy, which produces galactic noise, and extragalactic space, which produces cosmic noise. Solar noise comprises a low background level of thermal noise from the "quiet" sun, and sporadically higher levels of non-thermal noise from sunspots when the sun is "disturbed."

Galactic noise comprises a general background level from the galactic sources, which varies with the location and intensity of those sources. Cosmic noise comes mainly from the direction of certain stars that emit radio frequencies. Man-made sources of EMI, as noted above, include intentional sources, *designed* to generate electromagnetic energy, and unintentional sources, which generate EMI only *incidentally* to their intended function.

Man-made EMI sources and nearby EMI-susceptible equipment may be made electromagnetically compatible by reducing the EMI from sources, by reducing the susceptibility of equipment, and by introducing attenuation in all EMI paths between sources and susceptible equipment. Ideally, reduction of EMI should begin by designing the source so that it *generates* less EMI. The remaining EMI may then be *contained* within the enclosure by filtering and shielding.

EMI susceptibility of equipment may be reduced by designing the components and circuits so that the device is inherently less sensitive to interference. Conductive susceptibility may then be reduced by inserting filters in each line at the point where it enters or leaves the enclosure. Radiative susceptibility may then be reduced by shielding. All shielding problems may be divided logically into four major categories, by the nature of the result required: 1) containment shielding; 2) exclusion shielding; 3) exclusion/containment shielding plus pressure shielding; and 4) grounding and contacting.

To eliminate or reduce EMI, Anemco, Inc., of Anaheim, California, offers a selection of EMI shielded enclosures:

The double-shielded Lindsay Structure, considered the epitome, offers the greatest shielding effectiveness over the widest range of frequencies. Of all metal construction (zinc-coated steel), the Lindsay Structure provides the greatest strength-to-weight ratio with single or double wall panels of 24 gauge steel. The panels are stressed and held together by "U" and "M" channel and tensioner framing members. This construction affords excellent electrical and mechanical joints and seams to assure the highest level of shielding effectiveness. Doors are easy opening, with three-point latch.

Solid laminated sheets are most widely accepted for general shielding needs, providing good strength and attenuation. Panels are constructed of solid core sandwiched between steel sheets. Core and steel finishes are designed to match customers' needs and uses. Panels are joined with 1/8-inch steel hat and flat "U" and "W" channels. The rooms are easily installed, modified, and moved.

Screen rooms offer a medium amount of shielding effectiveness. The screen is secured to a wood frame for easy installation. Each panel is interlocked with the next. Wainscoting is attached to protect the lower portion of the room. The screen enclosure was developed to offer a lightweight and an inexpensive portable means of interference suppression. The enclosures can be as small as a desk-top model (one cubic foot) or as large as a research laboratory. The frequency range of attenuation is dc to greater than 400 MHz to E fields, covering approximately 95 percent of normal applications.

All rooms are constructed of quality material using proven joining techniques to offer maximum shielding. Standard enclosures, based on nominal two- and four-foot increments, are readily available. Special sizes and accessories take a little longer. All are easily installed with simple tools. Cost could be directly related to the amount of suppression or attenuation requested. Anemco, Inc., can also update, move, modify, certify, and maintain existing enclosures.

Anemco, Inc., has a staff of experienced personnel to assist you with your questions. They will help you to incorporate your requirements into an effective structure. Turn-key requirements are welcome. The Anemco, Inc., staff has modified, assisted, designed, and installed rooms at many sites including Vandenberg AFB, Goldstone, TRW, Hughes Aircraft, U.S. Navy, and aerospace, radio, and TV sites, and also in the commercial CB, communications, hospital, computer, and classified areas.

For full information on how Anemco, Inc., can help solve your EMI attenuation/suppression problems, write *Anemco, Inc., 157 Freedom Avenue, Anaheim CA 92801, or call (714)-879-6092.*

Morgan W. Godwin W4WFL
Peterborough NH

HAMTRONICS 2 METER TRANSMITTING CONVERTER

Whether you're interested in local rag chews, terrestrial DX, moonbounce, or OSCAR operation, Hamtronics' new 2 meter transmitting converter is a quick and easy way to produce a useful signal at low cost. The XV2 transmitting converter is designed to convert 1 milliwatt of 10 meter energy to provide 2 Watts PEP output on 2 meters. A modified CB SSB transceiver can also be used as an exciter. And, since it is a linear converter, the XV2 may be used on any mode: SSB, CW, AM, FM, etc.

The transmitting converter kit comes in three versions for 2 meters, XV2-4 (28-30 MHz = 144-146 MHz), XV2-5 (28-30 MHz = 145-147 MHz), XV2-6 (26-28 MHz = 144-146 MHz), as well as models for 6 meters and 220 MHz (other special frequency combinations are possible). Rf input requirement is less than 1 mW PEP (100 mV into 50 Ohms or −7 dBm typical). Rf output is 2 Watts PEP continuous on SSB or keyed CW and 2 Watts at 50 percent duty cycle on FM or carrier.

Frequency conversion is accomplished by two n-channel J-FETs operating in a balanced mixer configuration. Injection is generated by a 39-MHz crystal oscillator operated from a regulated power source. The oscillator frequency is tripled and spurious multiplier products are filtered in two stages following the oscillator. The 2 meter mixer output is amplified in two class A amplifiers and a class AB output stage to provide an rf output of 2 Watts PEP. This rf output may be used to drive a linear amplifier or it may be fed directly to an antenna. A low-pass filter in the output minimizes harmonics so that direct operation may be safely undertaken.

While the instructions that accompany the XV2 kit are not of the precise, step-by-step nature of those provided by some kit manufacturers, they are certainly detailed enough to provide all the guidance needed to easily and successfully assemble and align the unit in trouble-free fashion. The instructions are, in fact, pretty much like those to be found in a well-written magazine construction article. Read over the explanatory material two or three times, particularly the page headed "General Construction Notes," and you'll be prepared to start putting the unit together.

I tend to be a rather slow worker, but even with several interruptions the assembly and tune-up proceeded smoothly and without incident to make an interesting and enjoyable day's project. Even the winding of the coils—something I ordinarily hate like blazes to do—went without a hitch on the first try.

All that's needed to align the XV2 transmitting converter is a VTVM, 2-Watt dummy load, a 10 meter signal generator capable of supplying 300 mV of rf, and a 13.6 V dc regulated power supply with an internal or external milliammeter (up to 500 mA). If a signal generator is not available, the 10 meter exciter may be used; however, caution must be used to ensure that the transmitting converter is not overdriven, and some means of varying the carrier level must be provided.

Alignment instructions are quite detailed and, if properly followed, you should have no difficulty in putting the converter on the air quickly and easily. Should you run into a problem, the section on troubleshooting will enable you to pinpoint and correct it.

Since it seems probable that most exciters used to drive the XV2 transmitting converter will

produce considerably more output than is required, the information included on attenuators is particularly helpful. In addition to explaining the construction and use of attenuators as well as typical component values to drop the *output of your* exciter *to the* required 1 milliwatt level, there are instructions for modifying the exciter to provide a low power tap and for using a Cantenna or similar dummy load to reduce the output to the appropriate value.

If you need more than the 2 Watts **PEP** provided by the converter, you can use it to drive one of the several linear amplifiers Hamtronics offers, such as the LPA 2-15 or LPA 2-45.

The XV2 is designed to be mounted in Hamtronics' companion A25 cabinet or, by utilizing the six mounting holes provided in the corners and center of the circuit board in conjunction with suitable screws and spacers, it can be installed in any cabinet or panel arrangement to suit your individual requirements.

If you're looking for a way to get on 2 meters quickly and easily without breaking the family budget, the XV2 can't be beat if you've got an exciter with output in the 26-30-MHz range and are willing and able to put in a few hours to build and tune up the little converter.

The model XV2 series transmitting converter kits are priced at $59.95. A new free catalog describing the complete Hamtronics product line is available upon request. *Hamtronics, Inc., 182 Belmont Road, Rochester NY 14612, (716)-663-9254.*

Morgan W. Godwin W4WFL
Peterborough NH

TEN-TEC ANTENNA TUNERS

I enjoy operating all of the HF amateur bands with my FT-101B, using a variety of antennas fed with coax and open wire feeders as well as an end-fed random wire. As a result, I need a good wide-range antenna tuner and Ten-Tec's model 247 and 277 tuners have been doing a beautiful job for me on 160 through 10 meters. Both models use inductive/capacitive networks for matching unbalanced 50-75 Ohm output impedances of transmitters and transceivers to a variety of balanced and unbalanced loads over the 1.8 to 30 MHz frequency range (maximum balanced load 1.8 to 4.0 MHz is 600 Ohms). Rf power rating for both units is 200 Watts (continuous). Model 277 has a built-in swr bridge and meter.

The tuner circuit is the same in both models, a parallel circuit consisting of an inductor and two variable capacitors connected in series. The input is applied to the center of the series capacitors and ground. Another variable capacitor is connected in series with the output lead to the coax and single-wire terminals. For balanced outputs, a balun is connected so that the basic tuner output is applied to one half of the winding, and transformer action produces the opposite half with reference to chassis ground. Thus the balanced output will provide twice the rf voltage, symmetrical to ground. The arrangement produces an impedance transformation step-up of four times on the antenna side, enabling you to match just about any antenna system impedance to 50 Ohms.

When the tuner circuit is adjusted for a match, the parallel-tuned circuit will be approximately in resonance at the frequency involved. The load's reactive components will be compensated for by the series output capacitor and a slight off-resonance setting of the parallel circuit. Since both the inductor and shunt capacitor are variable, there are, of course, many possible settings of these components that will resonate at a given frequency. As pointed out in the instructions that accompany the tuners, a high inductance with small capacitance will resonate just as well as a small inductance with large capacitance. This raises the obvious question as to whether one way is better than the other. The answer is yes.

When matching your rig's output to high impedances, there must be a certain amount of inductance present to effect a proper match. The step-up transformation of resistance is dependent upon the "Q" of the circuit, which is a function of the inductance. Further, the L-to-C ratio of the circuit determines the frequency range over which operation with an acceptable swr is possible without retuning. The smaller the L/C ratio, the greater the bandwidth. The following results from Ten-Tec lab tests illustrate how effective this becomes at low frequencies: At 3.75 MHz and with a 50-Ohm load, setting the tuner for maximum L/C ratio produced a frequency range of 50 kHz (±25 kHz of center frequency) before an swr of 2:1 was encountered. However, adjusting the tuner *circuit for* lowest L/C ratio increased the frequency range to 400 kHz before the swr exceeded 2:1. Also, with the broader-band L/C ratio, tuner adjustments are much less critical and the dip to 1:1 on the swr meter is broad. With high L/C ratios, the dip is very narrow and sharp, making it easy to miss.

Ten-Tec has thoughtfully included a 7-page pamphlet packed with instructions and information to enable users to get the most out of their tuners. The concise explanations of antenna systems matching theory, transmission lines, antennas, swr, and more is a fine touch and one that will certainly result in improved performance for those who follow the sound advice provided within those few pages.

The model 247 (tuner only) measures a compact 2-15/16" x 7-3/4" x 6-11/16" while the model 277 (with swr meter) is 3½" x 10-1/4" x 6-1/2". Both units weigh approximately 3 lbs. Model 247 is housed in a case with etched aluminum chassis and front panel and model 277 has a grey chassis and front panel and black textured sides and top. Both will make an attractive and most useful addition to your shack. Model 247 sells for $69.00 and model 277 for $85.00 *Ten-Tec, Inc., Sevierville TN 37862.*

Morgan W. Godwin W4WFL
Peterborough NH

NEW COMPACT AMATEUR HAND-HELD RADIO NOW AVAILABLE FROM STANDARD COMMUNICATIONS

A new very compact 1+ Watt 2 meter amateur hand-held FM transceiver is now available from Standard Communications Corp. of Carson, California.

This radio, designated C-118, measures 2-43/64" wide x 6-1/16" high x 1-41/64" deep (or approximately the size of a dollar bill) and permits the user to transmit +600 kHz, −600 kHz, or receive and transmit on the simplex frequency with just one crystal. This provides a total of 18 transmit channel capabilities with only six crystals.

The C-118 also incorporates a built-in condenser microphone and LED status lights for "channel busy" and transmit. Also included at no additional charge is a BNC connector with rubber flex antenna, provisions for external dc power supply, and earphone. It has a frequency range of 144-148 MHz and is equipped with one crystal for operation on 146.94 simplex and .34/94 MHz.

To obtain a free copy of the C-118 data sheet, write *Standard Communications Corp., PO Box 92151, Los Angeles CA 90009.*

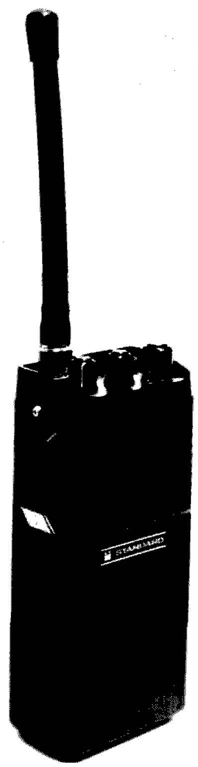

Standard's C-118 hand-held transceiver.

YAESU APOLOGIZES

Early Yaesu advertisements for the new FT-225RD transceiver were incorrect in that they tended to indicate that the memory unit is included in the price, whereas in fact it is an option. Yaesu apologizes for this error and hopes that it has caused their valued customers no inconvenience.

Harry A. Mills W4FD
Box 280
Bullard Route
Dry Branch GA 31020

Gene Brizendine W4ATE
600 Hummingbird Drive SE
Huntsville AL 35803

Antenna Design: Something New!

—controlled-current distribution

Antenna elements to date, whether grounded or ungrounded, are by and large composed of electrically continuous conductors whose dimensions are based on formulas related to the free-space dimensions of radio waves. The presence of standing waves and losses due to end effects have heretofore been accepted as more or less necessary in the transfer of radio frequency energy into space.

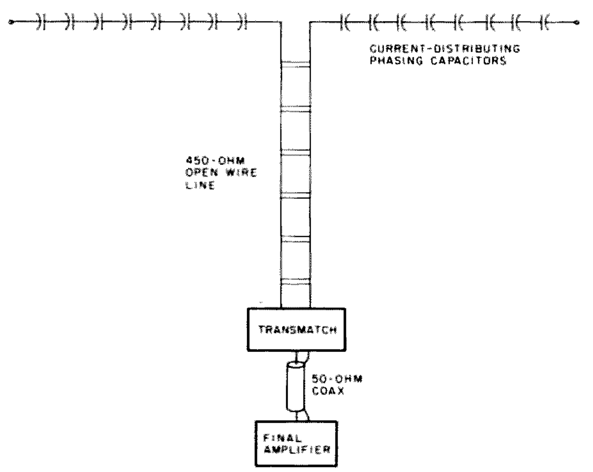

Fig. 1. Controlled-current distribution antenna general arrangement. Details of construction and adjustment are included in the text. A feedline length which is a multiple of ½ wavelength at the lowest (design) frequency is desirable.

Our thinking in this regard has changed very little since the medium of radio was discovered more than a hundred years ago.

The greatest impediment to progress in antenna development over such a long time has been the belief that an "antenna" is merely a length of wire in space, whose dimensions are locked to the operating frequency. The second problem, also linked with the first, is the notion that the antenna should sustain a standing wave. Thirdly are the problems associated with lossy end effects. There is also the excessive copper heat loss that must occur at the center of the conventional dipole. The losses due to high current (and rf field) density multiply when the usual antenna is erected as a quarter-wave vertical radiator.

But all of this was BC (before capacitors). The fact that the radiation directly from a capacitor is so minor does not justify its virtual elimination from use in antenna systems. As a device for the control of phasing, it looms as the most important consideration of all, both for pushing that antenna current to all parts of the radiator and, importantly, to distribute it in phase, so the resulting field is efficiently directed. Interestingly enough, superior results occur when the current distribution becomes more equal in the system. Lo and behold, best results are obtained upon elimination of the standing wave.

The insertion of capacitors in series with an antenna was briefly described by Terman.[1] Some ideas were added by Charman, with the advice that the technique "well deserves further investiga-

[1]Terman, ***Radio Engineering Handbook***, **McGraw-Hill, New York, 1943, page 773.**

tion."[2] How long it has taken us to grasp the handle on this rocket, on which we may escape the prison of conventional thinking! Let us take that flight, without further delay.

It is difficult to face the fact that, for all these years, we failed to take advantage in antenna design of that most important characteristic of a capacitor, its inherent low loss. The lowly capacitor is well established as man's best friend in the design of power and audio filters over these many years. Somehow, a blind spot has prevented us from seeing it in the vital role of filtering out antenna current into a most efficient distribution pattern.

Additionally, by equalizing current throughout the radiator by use of capacitors, we realize another very important improvement. Over the years, we have tolerated that wasteful spray of high-angle radiation which occurs from the high-impedance, high-voltage portions of our antenna as though it were an unavoidable evil. In reality, a standing-wave-type radiator thrusts out energy at widely varying angles, becoming worse toward the ends. When we approach equal current along the antenna, radiation begins to focalize at a low angle. Lo and behold again, our antenna begins to perform amazingly well on DX, even when close to or near the ground. In brief, the equalized current element becomes an improved performer when substituted for the conventional dipole form in all kinds of configurations.

The present paper was written to encourage a breakthrough and breakaway from conventional impeding practices. Some simple theory and practical construction details are included to introduce the improved system.

Developmental Background

The controlled-current distribution (CCD) principle was recognized more than ten years ago, during the development of a compact 3-element rotary beam. Ferrites were used, not only to dramatically shorten the antenna elements, but also to provide a means whereby a special type of cored ferrite material could be used to electrically tune each element individually over a wide range of operating frequencies. Controls for tuning are conveniently located at the operating position.

The CCD principle is implicit in the basic United States patent 3,564,551, granted to W4FD on February 16, 1971, which covers the scheme whereby a dipole antenna element employing ferrite is tunable over a wide range of frequencies, in either transmitting or receiving modes, by varying the permeability of the sleeved cores. Permeability variation is accomplished by magnetically biasing the cores with controlling field current windings.

It is well known that ferrite material must be employed in rf circuits under conditions of high current and low voltage because of its inherently high dielectric properties. Previous use of this material had been limited to the middle one-third to one-half of the dipole.

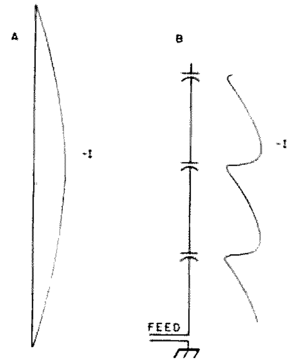

Fig. 2. (a) Conventional half-wave radiator showing the concentration of current at the middle half of the antenna. (b) Small section of a vertical CCD antenna showing current loops at each capacitor-wire section. Loop amplitudes decrease as the radiator end is approached. However, very significant improvements in gain and other features now result from expanding current distribution outward from the antenna center to better utilize the entire radiator.

To offset this limitation, a means to obtain a near-constant rf current along the conductor was conceived. This CCD scheme made it practical to utilize cored sleeves over the entire radiator and to greatly extend the frequency tuning range.

In brief, the system made possible the operation of elements as short as hundredths of a wavelength, with spacing of beam elements likewise reduced. Upward of 300 foreign countries were contacted by W4FD, under the previous call W3UZ, using the shortened ferrite antennas between the years 1959 and 1973. Moreover, many of these contacts were made while radiating from ferrite elements in a basement in Washington, DC, 5 or 6 feet below outside ground level.

Continued experimentation with the CCD scheme, following its initial use in ferrite antennas, revealed that the gain realized from conventional wire, beam, mast, or tower antennas of all types could be markedly improved by employment of the controlled-current distribution principle. In short, it improves the operation of antennas at both dimensional extremes.

The Controlled-Current Distribution Theory

It is well established that a maximum field is produced around conductors at points of maximum current. Points of high voltage and low current, conversely, produce small fields. It follows that, should some means be provided to maintain the antenna current at a constant or near-constant value along a conductor, the resulting field should translate into improved gain from the radiator. This condition of tracking the antenna current in phase would not only redistribute the excessive I^2R conductor heating loss present at the center point of peak current, but would also reduce or eliminate the dielectric end effect losses. Such a current distribution would not only make it possible to efficiently employ constant cross-section area sleeves in a ferrite radiator, but also to improve other antenna systems.

Band meters	Length feet	Section inches	Sections number	Capacitor pF	Capacitors number	"K"
160	560	140	48	1560	46	33.92
80	280	70	48	780	46	16.96
40	140	35	48	390	46	8.48
20	70	17.5	48	195	46	4.24

Table 1. Construction guidelines for CCD antennas one space wavelength long.

[2]Charman, RSGB *Bulletin*, London, July, 1961.

The problem of current distribution was resolved by cutting the antenna conductor into twenty-two or more even-numbered sections of equal length, to which were interconnected in alternate series twenty or more equally-valued fixed capacitors. Note that no capacitors, either series or shunt, are employed at the feedpoint, Fig. 1. The antenna always begins with conductor sections at the center feedpoint and ends with conductor sections.

It will be helpful to point out here that the CCD principle is really that of carrying out the idea of top or end loading, so often utilized in the conventional shortened antenna. The ultimate result is that of improving the current distribution throughout any length radiator. Control of current distribution by means of interconnected series conductor-capacitor sections with fanned end radials or large discs (but without lumped inductance in the circuit) begins at one-half wavelength for the dipole or a quarter of a wavelength for the grounded vertical. Thus, by using the horizontal dipole as a guide, it can be seen that the addition of aluminum screen discs at the ends, plus the cutting of a half-wavelength radiator into a series of alternate wire and capacitor sections, could improve both the current distribution and gain of the resultant radiator. However, this is only the beginning of the possibilities.

The Antenna Aperture Concept

One aperture can be conveniently defined, for the purposes of this article, as the in-space dimension of a half wavelength at a particular frequency. By this definition, the conventional thin-wire dipole, because of its end-effect characteristic, may be said to have an aperture of about 0.95. Antennas constructed of tubing or cylindrical elements have an even smaller aperture.

Aperture as a concept involves the idea of exposure to a wavefront. The idea may be referred to a slot antenna, cavities, or even to the raster of a television picture scan. In a sense, all radiating systems which present an exposure which is less than a wavefront in free space distance may be said to suffer from a degree of "wavefront distortion." In other words, the full potential of the wave-sweep or scan is not present in a transmitting or receiving antenna of contracted dimensions.

Real exposure efficiency, or maximum aperture usage, begins at the point where an in-phase equal-current coverage fills the conductor or slot medium.

Exposure efficiency begins in a smaller way with the CCD scheme, plus element end or top capacitance loading, and emerges more or less full-blown with antenna lengths of two apertures or more.

The improvement in gain that can be effected through the use of a constant-current distribution arrangement can be illustrated with the 5/8-wavelength horizontal antenna. This radiator produces its peak gain at this length partly because of the trade-off between an increasing out-of-phase component and its expanded aperture. Gain begins to decrease at antenna lengths above and below the 5/8-wavelength figure.

It is customary to provide the 1/8 wavelength (extending the ½-wave dipole) by loading the antenna with a non-radiating series inductor. However, inductors introduce substantial losses. Therefore, any trade-off scheme to increase gain through the use of either inductor or capacitors should favor the inherently lower-loss capacitor. Moreover, the CCD principle can be employed not only to eliminate the loading inductor losses, but also to effectively distribute the current so that resonance is restored to the ½-wavelength value. Not only is the out-of-phase component effect greatly reduced, but the resultant current distribution can be made phase-aiding also. Furthermore, the trade-off limitation at the 5/8-wavelength dimension disappears, and the way is opened for continued increase of aperture, in phase, with increasing antenna length.

Controlled-Current Distribution Principles

The CCD process can be more easily visualized by comparing it to full-wave rectification of a multi-phased alternating current to iron out the ac ripple component. No rectification of the rf in the antenna element is, of course, taking place in the CCD system. However, in the alternate conductor-capacitor arrangement, as values of capacitors are progressively increased and wire length in each section is decreased, within reason, the rf standing-wave "ripple" along the antenna will tend to smooth out. The better the distribution of the current, approaching a true in-phase condition, the more effective the antenna. The capacitance loading discs employed serve the purpose of carrying uniform distribution of current nearer to the radiator's very end.

An illustration of current patterns through the X_C and X_1 components is shown in Fig. 2(b). A vertical radiator is depicted, so that positive X_1 and negative X_C values may be shown right and left respectively. The wire sec-

Date	Time DST	Antenna	Height in feet	Ferris 32-B level, dB
7-2-77	1:45P	#4 CCD	60	20 Relative
		REF	60	15
	2:10P	#7 CCD	60	20
		REF	60	15
7-4-77	7:20P	#4 CCD	60	20
		REF	60	15.5
7-5-77	10:56A	#4 CCD	60	20
		REF	60	15
7-14-77	10:40A	#4 CCD	60	20
		REF	60	15

Test antenna specifications:
#4 CCD—150 feet overall, 36-inch sections, 390 pF caps.
#7 CCD—136 feet overall, 38-inch sections, 390 pF caps.
Reference model 67 feet overall. A conventional dipole.
All three antennas normal to a bearing of 45 degrees true, and the standard Ferris model 32-B antenna.
All inactive antennas were floated during each reading.

Table. 2. CCD comparative field intensity measurements.

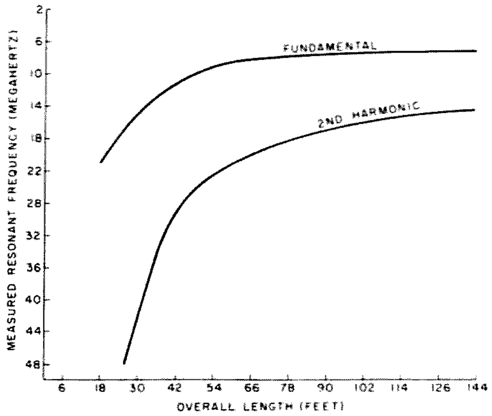

Fig. 4. The Mills controlled-current distribution antenna. Graph made from data taken during assembly on July 20, 1977. Section length—11 inches; capacitors—1500 pF; number of capacitors—160; dip meter—Millen Solid. For exact measurement data, see Table 4.

most efficient use of the available ground space.

One startling characteristic of the CCD antenna is its almost complete immunity to the effects of close-by nonresonant conductors or semiconductors. In one test, consistent S-9 reports on 7 MHz were received by W4FD from stations in Miami, Cincinnati, New Orleans, and Louisville with the CCD antenna lying flat on the ground during a soaking rain. With the CCD arranged in a square, again flat on the ground and under several inches of snow, I2CUV reported a signal of 549 on January 28, 1977. A two-wire nonradiating feeder 9 feet long was used, and no arcing was found along the radiator with an input of 500 Watts.

Advantages of the CCD Antenna

1. Greater gain.
2. Great reduction or elimination of end effects.
3. Higher antenna resistance.
4. Full use of antenna element—no nodes.
5. Lower radiation angle—good DX radiator.
6. No high voltage points—can be laid on tree limbs.
7. Good field day antenna—works well at only 8 feet up.
8. No phase-inverting stub required.
9. Can be made any convenient length for available space.
10. Improved broadband characteristics.
11. Improved broadside radiation at early harmonics—good harmonic antenna.
12. Current distribution effects lower losses in both antenna and ground.
13. Very effective for quads, deltas, etc.
14. Changes in height produce progressively less relative changes in antenna resistance as the number of capacitors and overall length are increased.
15. Harmonic operation becomes more and more effective as the number of capacitor units is increased and the conductor sections are proportionately shortened. Rule of thumb shows that, for a given overall antenna length, shortening the wire sections by one half doubles both the number and the capacitance values of the fixed capacitors required. Broadside pattern characteristics are proportionately improved at both the fundamental and harmonic frequencies with an increasing number of sections.

CCD Disadvantages

1. Increased cost because of the added wire, capacitors, and insulators.
2. Greater care in construction and testing.
3. Requires more erection space than is available to some amateurs.
4. In CCD antennas for 3.5 MHz and lower, the capacitors should be protected from static charge by shunting resistors. If a cluster of CCDs is used, only the longest one needs this protection.

These are really minor inconveniences in contrast to the fifteen overwhelming benefits listed above. The old adage, "Every nickel spent on the antenna is worth more than a dollar spent on the station gear," was never truer. Give that good rig a chance with an equally good antenna!

Comparative Field Intensity Measurements of the CCD Antenna

At the W4FD antenna range, carefully controlled gain measurements are made using a laboratory standard Ferris model 32-B field intensity meter, fitted with its standard 41-inch antenna. Power to both the plates and filaments is regulated to 1 percent. The laboratory equipment is

Length overall (feet)	Fundamental (MHz)	2nd harmonic (MHz)	3rd harmonic (MHz)	4th harmonic (MHz)
6	46	125		
12	30.1	86	140	
18	22	63.5	104	
24	17.8	57	83.5	
30	14.4	42.5	71	
36	13	36.6	59.5	
42	11.5	31.7	52.6	
48	10.5	28.4	48	
54	9.9	25.5	40.8	
60	9.3	23.5	38	
66	8.9	21.6	35	
72	8.65	19.8	32.5	
78	8.3	18.5	30	
84	8.1	17.3	28.3	
90	7.9	16.15	26.35	
96	7.8	15.5	25	34
102	7.7	14.6	23.6	32.5
108	7.6	14.1	22.4	30.4
114	7.5	13.4	21.3	29
120	7.35	12.9	20.3	27.9
126	7.25	12.4	19.2	26.4
132	7.15	12.0	18.3	25.4
138	7.1	11.7	17.8	24.5
144	7.05	11.4	17.15	23.1
*150	7.0	11.3	16.0	21.8

*Table 3. Measured CCD antenna fundamental and harmonic resonances versus overall length, as measured during construction. The graph in Fig. 3. was plotted using these values. *With 2-foot square aluminum screens attached to each end during last measurement.*

 Oct 1978

tion is distributed X_1, comprising most of the radiator, and the X_C contributes only minor power in the radiation process.

Contrasting the CCD features to another type of long antenna, the collinear array, its performance superiority is readily apparent. When several one-wavelength CCD radiators are configured as a collinear array, no longer are the usual 180-degree phase-shifting stubs required at one-half wavelength intervals along the radiator. Stubs are only needed to separate each one full electrical wavelength, thereby reducing the number of stubs by one-half in a given array.

The simplified and improved antenna will prove to be outstanding in gain for 2 meter and higher frequency applications and particularly in color television, where a broadband response is mandatory.

The user of the CCD will be especially pleased with its performance as a vertical radiator. The longer his CCD with respect to the electrical half wave, the less will be the need for the labor-consuming radials which are so important to the conventional standing-wave system. Since current is nicely distributed throughout the radiator, no longer are we troubled by the heavily-concentrated field and resulting lossy ground-return currents directly at the vertical antenna base. The heavy field around the base becomes less and less as the antenna is lengthened to one-half wavelength and performs quite well with shorter radials. At one wavelength, we realize a low-angle radiator par excellence and may dispense with the radial plow.

The user will be most agreeably surprised when he learns that the almost uniform distribution of current throughout the CCD not only provides a more favorable antenna resistance at the fundamental frequency (usually double), as compared to the conventional dipole, but also the current distribution at the second harmonic will be only a few hundred Ohms (usually less than 450), provided he utilizes 50 or more distribution capacitors. Moreover, most of the radiation will occur broadside to the antenna, as has been found during operation at the fundamental frequency.

Elaborate measurements and adjustments could be performed, measuring antenna resistance and resonant frequency with rf bridge and detector, while adjusting end-loading capacitor screen discs to the exact diameter. However, in practical application, such elaborate tailoring is not justified, because the antenna will generally be used over a wide range of frequencies.

How the CCD Antenna Differs

It has long been assumed that, because radio frequency energy becomes an accurately measurable standing wave in free space, the radiating element itself should be dimensionally designed to also contain a standing voltage wave. This locked-in concept, far from having basis in fact, is one of the bottlenecks to the realization of greater efficiency and versatility in antenna design and construction.

Here are features wherein the improved CCD antenna departs radically from the usual dipole. First, we select the wire section length desired and then determine what capacity in picofarads is necessary to partially cancel the inductive reactance of the wire sections.

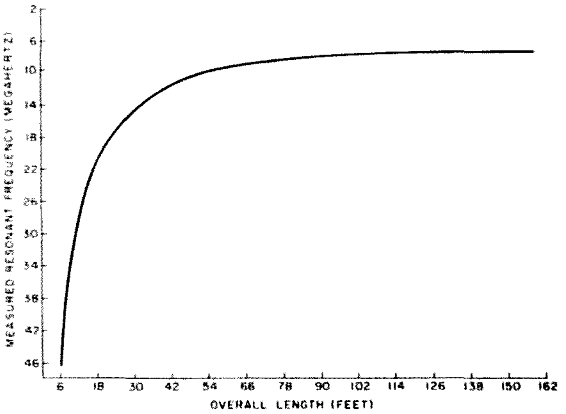

Fig. 3. The Mills controlled-current distribution antenna. Measurements were taken during assembly on March 24, 1977. Sections—3 feet; capacitors—silver mica 390 pF (50 each); dip meter—Millen Solid; coupling turns—8. For exact measurement data, see Table 3.

Too low a capacity will create too high a capacitive reactance in Ohms and thereby over-cancel the inductive reactance of the wire section. Conversely, incorporating capacitors of too small a value will prevent ever achieving resonance, regardless of how many sections are added. The X_1 to X_C ratio is the key to proper CCD antenna performance. If the difference is too small, we will require an impracticable number of wire sections and series capacitors to obtain resonance at the desired frequency, and the magic of controlled-current distribution disappears.

The superior characteristics of the controlled-current distribution system become apparent when the radiator overall length is extended to one electrical wavelength and beyond. The end-loading discs may then be eliminated, except in instances where it is desired to feed the antenna at some point considerably off center. In such cases, the use of a disc is recommended only at the shorter end. When off-center feed is employed, a balun should be inserted between antenna and feedline to isolate the feedline circulating currents and to maintain balance. Since the antenna impedance along its length is practically constant, no feed problems should be experienced at any point, provided that balancing techniques are employed.

The broadbanding characteristics of the CCD radiator are remarkable, increasing in proportion to antenna length. Since standing waves are now conspicuous by their absence in the conventional sense, the need for a phase-inverting stub (which limits bandwidth in the collinear array) no longer exists. In one fell swoop, controlled-current distribution removes both a long-standing obstacle to broadbanding and also the wire loss introduced by the stub.

Heretofore, the capacitor has not been employed to any great extent directly in antenna elements. It is passive insofar as its contribution to the radiation process. However, its low losses and its ability to control current distribution, and hence phasing, give it a unique place in antenna design. Importantly, it provides the antenna designer with flexibility in tailoring his radiating system for the

housed in a permanent isolated building located normal to the test antennas and 56 wavelengths distant (at 7 MHz). A 67-foot-long dipole, for comparison, is mounted parallel with the CCD antennas and is elevated 60 feet.

Two identical separate drivers and finals are carefully matched for equal outputs and feed identical impedance-matching networks and transmission lines to the antennas being compared. To minimize the effects of fading, provision is made for rapid alternate switching between the two antennas being compared, both while transmitting and receiving. See Table 2.

Overseas Signal Reports

The results of DX tests and transmission and reception have favored the CCD by between 5 and 7 dB over the reference dipole. On good DX nights, reports on 7 MHz CW have been 10 to 20 dB over S9 from Europe and Asia to W4FD using 500 Watts.

CCD Construction Guidelines

Several methods of assembling the capacitor/wire sections have been employed successfully. These have included: (1) bridging the components across small strain insulators; (2) utilizing spacing insulators salvaged from large coaxial transmission lines; (3) encapsulating the components inside a light plastic tube (Figs. 5 and 6); and (4) spiraling dual wires about a nylon rope and taping each capacitor for waterproofing (Fig. 7).

The construction method selected depends upon individual siting problems. The major requirements are: (1) mechanical strength sufficient to support the antenna during wind and icing conditions,

Length overall (feet and inches)	Fundamental (MHz)	2nd harmonic (MHz)	Number of capacitors
20' 8"	19.1	57	24
25' 7"	16.6	48	30
32' 7"	13.2	36.4	42
38' 9"	11.5	30.9	50
47' 5"	10.25	26.5	60
58' 2"	9.45	22.2	70
74' 2"	8.85	19.2	80
82' 5"	8.5	18	90
90' 7"	8.2	17.2	100
98' 9"	8.0	16.4	110
106' 11"	7.85	15.8	120
115' 1"	7.6	15.4	130
123' 3"	7.4	15.0	140
131' 0"	7.2	14.6	150
139' 0"	7.05	14.15	160

Table 4. Fundamental and harmonic resonances versus overall length for a CCD antenna containing 160 capacitors, as measured during the assembly phase. The graph in Fig. 4 was plotted from these values. Note: Frequency measurements for the 131- and 139-foot lengths are extrapolated, due to unavoidable circumstances during construction.

and (2) protection of components from moisture, salt water, etc. Obviously, a CCD mounted within an attic would have less stringent requirements.

Method (4) above was developed by W4FD and has proven very effective in situations where the assembled radiator must be dragged through tree branches or over rugged terrain during erection. This method of assembly will be described later in detail because the CCD, for the first time, opens the door for successful antenna operation in treetops and in many other sites which have been found unfavorable for other antenna systems.

The types of capacitors preferred are polystyrene, silver mica, or mica, in that order. Capacity tolerance should be 5%, and the dc working voltage may be 200 volts, due to the relatively small rf voltage imposed across each unit in the CCD application, even at the legal power limit. Polystyrene capacitors provide the advantages of stability, excellent sealing, small size, and lightest weight. Capacitors of wider labeled tolerance are equally satisfactory, provided they are selected for the recommended tolerance by means of an rf Q-meter or bridge.

Lightning and static charge protective chokes were originally used across each capacitor. These may produce random resonance indications which are misleading during dip-meter measurements which are necessary to adjust the CCD antenna to resonance. For that reason, the substitution of 1-Watt, 20 to 50k Ohm resistors is recommended.

Proper capacitor values lie between the two extremes which were mentioned above, the key to efficient CCD performance being the condition of partial cancellation of wire section positive X_1 by the negative reactance X_C. A range of useful values and wire section dimensions is included in Table 1. A simple mathematical equation can now be established in which the CCD series capacitors can be equated to a certain K value for each band. For example, if you have 26 five-foot sections (with 24 capacitors) in the antenna series string and find that 270 pF per capacitor is proper for resonance at 7.0 MHz, then:

$K = 270/24 = 11.25.$

This is, of course, the effective series capacity of the string. But, more importantly, we can use this K figure for determining fairly closely what capacitor value to use within other bands and with different wire section lengths and capacitor values. As indicated above, both the capacitance and wire section lengths are indirectly proportional to the operating frequency (i.e., K for 3.5 MHz would be around 22).

CCD antennas for higher frequencies may be designed by ratioing capacitors and wire section length from the data in Table 1. Similarly, the builder may completely fill his available land space by scaling the wire and capacitor sizes.

If capacitor values not shown in Table 1 are available, they may also be used to construct an efficient CCD antenna. It is only necessary to adjust

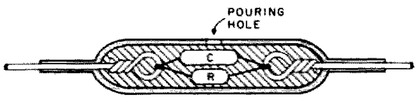

Fig. 5. CCD capacitor/resistor assembly encapsulated inside plastic hot and cold water pipe. See text for construction details.

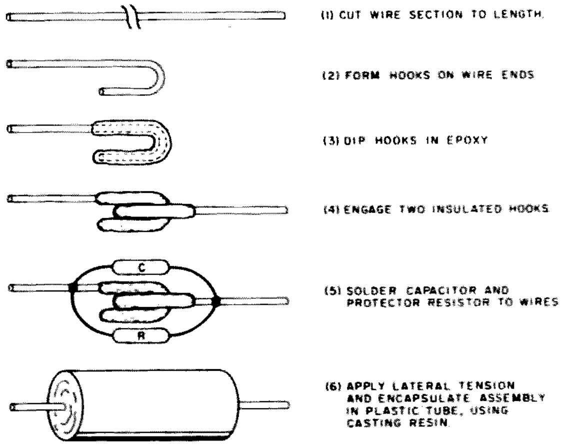

Fig. 6. Steps for constructing one type of rugged weatherproof capacitor/resistor assembly.

section wire lengths and numbers proportionately. For example, suppose that 470 pF capacitors are on hand, and a 7 MHz CCD is desired.

First, find the even number of wire sections required: 470 pF/8.48 ("K" for 7 MHz) = 56 wire sections. The overall antenna length is 140 feet (from Table 1) or 1680 inches. Then, find the section wire lengths: 1680/56 = 30 inches. The number of capacitors is always 2 less than the number of wire sections, or 54 in this example.

Harry's Magic Rope Trick

At his 40-acre antenna range on a 400-acre plot, Harry W4FD solved the special problem of raising controlled-current distribution antennas to the tops of the living 100-foot-plus Georgia pine trees which God so helpfully provided.

First, a 20-pound weight monofilament fishing line is shot from a spinning reel, over the trees, using a 45-pound pull bow. The arrow is weighted at the front by taping on a 14-inch length of ¼-inch-diameter steel rod. This added weight pulls the arrow and line to the ground after clearing the trees.

A 250-foot length of 40-pound-weight nylon cord is employed as an intermediary step. This cord, wound on a spool, is placed in a topless cardboard box. The cord end is then secured to the end of the monofilament line, following its removal from the arrow. The monofilament line is then pulled back through the tree by means of the reel (attached to the bow), until the forward end of the unwinding nylon cord is retrieved. The heavier nylon cord is then used to pull the antenna through the tree branches. The last step is simply a matter of rewinding the nylon cord on its spool until the forward end of the antenna is retrieved. (Note: It will usually be found best to lay the antenna out at the site in the form of two arm-wound coils, assuming you are using a center feedline. The pulling operation of antenna ends through the trees will then involve releasing one antenna coil at a time, working out from the center.)

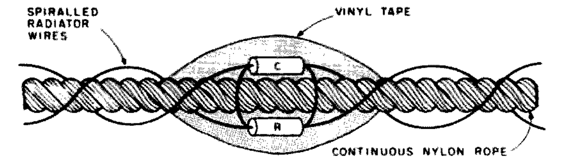

Fig. 7. CCD antenna assembly on nylon rope which provides insulation, support, and protection. Two wires are spiralled in opposite directions around the rope. The capacitor, resistor, and connections are protected against weather and rough usage with vinyl electrical tape.

To withstand the stress of dragging the capacitor/line sections through the tree branches, W4FD designed a special type of CCD antenna. A single continuous nylon rope of ¼-to 3/8-inch diameter provides all insulation and serves as a messenger to protect the antenna components during erection and also to provide a rugged support after the antenna is pulled into its operating position. In this form, the CCD becomes a versatile antenna which may be quickly unreeled for rigorous use in military, amateur field day, or emergency services.

General Construction

Two wires are paralleled in each section, spiralled in opposite directions about a continuous nylon rope. The use of two wires provides symmetry and improved performance. Electrically, the wire ends of each section are joined together and attached to the adjacent capacitor/wire section assembly, as in Fig. 7.

Construction Details

1. Test every capacitor for value, within 5%. The CCD will fail to operate properly with even a single defective capacitor. Form the capacitor leads in a straight line, pointing away from the capacitor body.

2. Cut sections of soft-drawn #17 or #18 enameled copper wire into lengths appropriate for the desired frequency of operation (see Table 1 for dimensions). Add one inch more to each wire section end for connections. Scrape clean the one-inch portions for soldering.

3. Arrange a comfortable work position for anchoring, stretching, and assembling one antenna section at a time. (W4FD uses two vises spaced on a workbench.)

4. Allow sufficient rope at each end for tying the finished CCD to its supports, and stretch the first rope section preparatory to applying the two wires. Anchor a single end of the wire to the rope using vinyl tape.

5. Simultaneously twist-wind the two wires about the rope in a crisscross (spiralling turns in opposite directions) manner, making 12 or 14 turns for the typical 5-foot section. The number of crossover turns is not critical. The purpose is to provide snug adherence of the wire to the rope. Experiment with the first section until you are satisfied with your technique.

6. Wrap two turns of both cleaned ends of the antenna section wires around a capacitor lead and one protector resistor lead close to the unit bodies.

7. Solder the two wrapped wires, ensuring that solder flows onto all wires and penetrates the joint. Well-soldered connections are essential to proper CCD performance; therefore, do not solder until all joints are clean.

8. Hold the capacitor and attached #17 wire sections snugly against the rope and apply one layer of vinyl plastic tape, starting on the rope about 2 inches from the capacitor/resistor ends. Lap the tape one half of its width for each wrap. Continue taping over the capacitor and resistor until the remaining capacitor/resistor leads are just exposed.

9. Wrap two other previously cleaned #17 (next section) wires around the exposed capacitor/resistor leads, and solder well, ensuring that the solder flows onto all joining surfaces. (Note: All soldered connections must have smooth surfaces to eliminate any sharp projections of wire or solder which could puncture the waterproofing tape during erection.)

10. Apply a final wrapping on the entire capacitor/resistor assembly, starting on the rope about one-half inch beyond the end of the first taping. Continue taping until the leads are covered at both ends. (Note: An alternate method to taping may utilize heat-shrinkable tubing of a suitable diameter.)

This method of assembling the CCD on a taut rope, plus the crisscross winding of the #17 wire sections, will ensure, if carefully done, that no strain will be placed on the component pigtail leads during normal service.

Encapsulated Assembly Construction

The second Mills CCD antenna was built by W4ATE, as shown in Fig. 5. Thin-wall hot/cold plastic water pipe and the liquid casting material were purchased at Sears. The #18 copperweld wire and polystyrene capacitors are stocked by Burstein-Applebee, 3199 Mercier St., Kansas City MO 64111.

Construction Steps

1. Cut wires to the length selected from Table 1, allowing sufficient material to form anchoring loops at each end.

2. Form simple loops at each end and solder the wrapped turns (to prevent any movement after final assembly).

3. Solder a protector resistor across each capacitor, without heat damage to either. Do not trim the capacitor leads. (Note: Care must be observed during the following steps to avoid breakage of small component leads.)

4. Wrap one capacitor and one resistor lead around the antenna wire loop, and solder well. Repeat, until capacitors and resistors are soldered to one end of each antenna wire section to be used in the entire CCD antenna.

5. Saw the hot/cold pipe into 2-inch lengths. Drill a 3/8-inch hole near the center of each (encapsulating liquid is poured into the hole later). (Note: Patience and coordination are required in the next step. A few practice runs are suggested using scrap pipe and wire.)

6. Soften one end of the pipe for ½ inch by inserting a small soldering iron. Caution: This operation must be performed outdoors, or in a well-ventilated room to avoid breathing the fumes.

After the pipe end becomes completely soft, the pipe is centered over the capacitor/resistor assembly. The softened pipe end is clamped flat in a vise so that the loop wrap portion is embedded in the softened pipe.

Again, this step requires patience, but careful execution will result in a strong and permanent antenna with no exposed connections. Repeat until a capacitor/resistor and pipe section is installed on one end of each wire section.

7. Assemble the antenna sections, using the same techniques as in step 6, to close the remaining pipe ends.

8. Seal all pipe ends temporarily with masking tape, to prevent any leakage of the encapsulating liquid.

9. Mix clear plastic casting liquid and catalyst in a small paper cup. (A convenient pouring spout is formed by creasing the cup edge.) Fill the pipe cavity completely, tilting it to free any trapped air bubbles. This will flow the liquid around the wire anchor loops to provide a solid, one-piece assembly. The filled pipe may be handled freely, after temporarily sealing the pouring hole with masking tape. Repeat until all assemblies have been poured.

10. After completely hardening, the masking tape may be removed. Any obvious voids or openings noted should be filled with the potting liquid.

Adjustments

Every CCD antenna constructed must be resonated by adding or subtracting complete sections while the frequency is being monitored with an accurate dip meter. The overall CCD lengths shown in Table 1 are intended as guidelines, which may be modified to achieve resonance at the frequency desired. An equal number of sections must be added or removed at each end of the radiator in order to maintain system balance. It is desirable that resonance occurs at the low-frequency end of the operating (design) band. This condition will also improve performance of higher-frequency harmonic operation.

During adjustment, the CCD may be suspended at a convenient 5 or 6 feet above ground. Due to its minimal end-effect characteristics, much less change in resonant frequency will occur upon being raised to its final operating height. A temporary coil is installed at the antenna feedpoint for coupling to the dip meter. Eight turns are suggested as a starting value, which should be reduced wherever possible for best measurement accuracy.

Inspection of the graphs in Figs. 3 and 4 reveals a very slow lowering of the fundamental frequency as the design goal is approached during assembly. This could prove to be frustrating to the builder who is assembling his first CCD. To enable the builder to better anticipate reaching the desired frequency and antenna length, frequent measurement of higher harmonic resonances will prove helpful. Optimum performance occurs at the length where the addition of more sections produces little or no change in the resonant frequency. Operation at lengths which fall along the knee of the graph is to be avoided. Final adjustment to resonance must be made while observing dip-meter indications at the fundamental frequency.

The Future

Future work will expand into the use of ferrite elements and CCD principles in minibeams, the improved performance found to result from the application of controlled-current distribution in loop-element beams, and the superiority of driven-element CCD arrays over parasitic configurations.

Preliminary tests with CCDs using very short sections (10 inches at W4FD and 5.73 inches at W4ATE) promise an improved antenna for underwater submarine communications.

Laboratory-type field intensity studies, as stated above, plotting at a microwave range, mathematical modeling, and computer analysis can unlock further secrets of the CCD principles. Meantime, we radio amateurs are in as unique a position as always, with 300,000 testing sites in this country alone, to again improve man's profoundly important instrument, communications. ■

Build An Audible Transistor Tester

—it's a CPO, too

Richard J. Molby WB7NZG/DA1DB
HHB 3rd BN 84th Arty
APO New York 09176

If this sad experience has happened to you, it may ›e because you are like nany experimenters who outinely use an ohmmeter o test transistors and liodes. Though this meth- ›d is effective, it can also :ause the instant death of ow-current semiconductor levices. The typical ohm- neter can, on some scales, pply a rather high voltage nd current across the test ›ads, which may cause the estruction of some semi- onductor devices. Anoth- r fault of the ohmmeter nethod is that the instru- nent must be checked isually; this can lead to rroneous results or dam- ge to equipment if a test ›ad slips while making ontinuity checks. What is eeded is a low current ınder 1 mA) device which ves an audible indication of continuity. Such a device should also be low in cost (for those of us who are cheapskates or poor) and simple to assemble. Fig. 1 shows such a device using a single 555 IC timer as a square wave oscillator and an NPN general purpose transistor for switching. Any method of construction can be used, as there is nothing critical about the circuit, but the most convenient method is perfboard and a socket for the IC. The checker can be assembled as shown in Fig. 1 for use as a continuity tester or, if desired, the device can also be used as a code practice oscillator. If it is desired to use the device as a CPO, it would be advantageous to be able to vary both the tone and volume, although this will run the cost up a couple of dollars unless the builder has the required parts in the junk box. The two potentiometers can be added to the circuit as indicated in Fig. 2. Safe testing, and build, build, build! ■

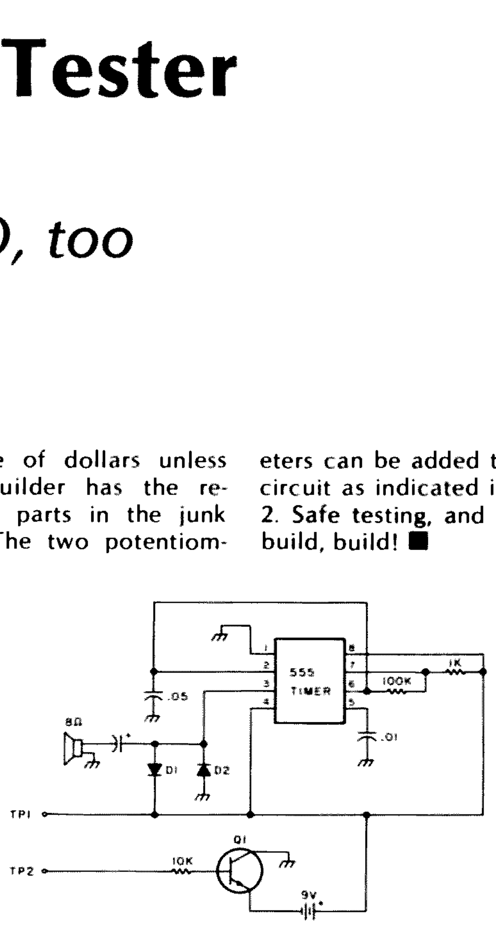

Fig. 1. Test oscillator (low current).

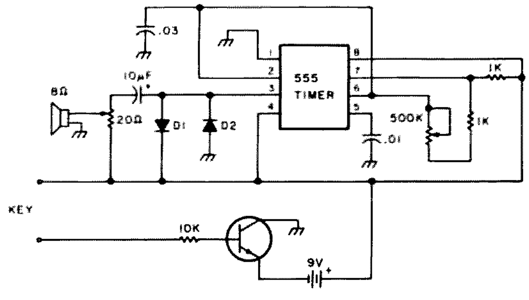

Fig. 2. Code practice oscillator.

propagation

by
J. H. Nelson

EASTERN UNITED STATES TO:

GMT:	00	02	04	06	08	10	12	14	16	18	20	22
ALASKA	14	14	7	7	7	7	7	7	14	14	14A	21
ARGENTINA	14A	14	14	7A	7	7	14	21	21A	21A	21A	21
AUSTRALIA	21	14	7B	7B	7B	7B	7B	14	14	14	21	21A
CANAL ZONE	14	7A	7	7	7	7	14	21	21	21A	21A	21
ENGLAND	7	7	7	3A	7	7B	14	21A	21A	21	14	7B
HAWAII	21	14	7B	7	7	7	7	7B	14	21	21A	21A
INDIA	7	7B	7B	7B	7B	7B	14	21	14	14	14B	7B
JAPAN	14	7A	7B	7B	7B	7	7	7	7	7B	14	14A
MEXICO	14	14	7	7	7	7	7A	14	21	21	21	21
PHILIPPINES	14	14B	7B	7B	7B	7B	7	7	7A	14	14B	14
PUERTO RICO	7A	7	7	7	7	7	7A	14	14A	21	21	21
SOUTH AFRICA	7A	7	7	7B	7B	14	21	21A	21A	21A	21	14
U. S. S. R.	7	7	7	7	7	7B	14	21A	14	14	14B	7B
WEST COAST	14A	7A	7	7	7	7	7	14	21	21	21A	21A

CENTRAL UNITED STATES TO:

GMT:	00	02	04	06	08	10	12	14	16	18	20	22
ALASKA	14A	14	7	7	7	7	7	7	14	14	21	21
ARGENTINA	21	14	14	7	7	7	7A	21	21A	21A	21A	21
AUSTRALIA	21A	14	7B	7B	7B	7B	7B	7A	14	14	21	21A
CANAL ZONE	21	14	7	7	7	7	7A	21	21	21A	21A	21
ENGLAND	7	7	7	3A	7	7B	7B	14	14	21	14	7B
HAWAII	21A	14	14	7	7	7	7	7	14	21	21A	21A
INDIA	7B	7B	7B	7B	7B	7B	7B	14	14	14	14B	7B
JAPAN	14A	14	7B	7B	7B	7	7	7	7	7B	14	21
MEXICO	14	7A	7	7	7	7	7	14	14A	21	21	21
PHILIPPINES	14A	14	7B	7B	7B	7B	7B	7	7	14	14B	14A
PUERTO RICO	14	7	7	7	7	7	7A	14	21	21A	21A	21
SOUTH AFRICA	14	7	7	7B	7B	7B	14	21	21	21A	21A	14
U. S. S. R.	7	7	7	7	7	7B	7B	14	14A	14	14B	7B

WESTERN UNITED STATES TO:

GMT:	00	02	04	06	08	10	12	14	16	18	20	22
ALASKA	14A	14	7A	7	7	3A	7	7	14	14	14	14A
ARGENTINA	21	14	14	7B	7	7	7B	14	21	21A	21A	21A
AUSTRALIA	21A	21A	14	14	7B	7B	7B	7	7A	14	21	21A
CANAL ZONE	21	14	7	7	7	7	7	14	21	21	21A	21A
ENGLAND	7B	7	7	3A	7	7	7B	7B	14	21	14	7B
HAWAII	21A	21	14	7	7	7	7	7	14	21	21A	21A
INDIA	14	14A	14	7B	7B	7B	7B	7B	14	14	14	14B
JAPAN	21A	21	14	7B	7B	7	7	7	7	7B	14	21
MEXICO	21	14	7	7	7	7	7	14	21	21	21	21
PHILIPPINES	21	21	14	7B	7B	7B	7	7	7	14	14B	21
PUERTO RICO	21	14	7	7	7	7	7	14	14A	21	21	21
SOUTH AFRICA	14	14B	7	7B	7B	7B	7B	14	14A	21A	21A	21
U. S. S. R.	7B	7	7	7	7	7B	7B	7A	14	14	14B	7B
EAST COAST	14A	7A	7	7	7	7	7	14	21	21	21A	21A

A = Next higher frequency may also be useful
B = Difficult circuit this period
F = Fair
G = Good
P = Poor
SF = Chance of solar flares

october

sun	mon	tue	wed	thu	fri	sat
1 F	**2** P	**3** P	**4** F	**5** G	**6** G	**7** G
8 G	**9** G	**10** F/SF	**11** F/SF	**12** F	**13** F	**14** G
15 G	**16** G	**17** G	**18** F	**19** P/SF	**20** P/SF	**21** P/SF
22 F	**23** G	**24** G	**25** G	**26** F	**27** F	**28** G
29 G	**30** P	**31** F				

November 1978 $2.00

73 Magazine for Radio Amateurs

W2NSD/1 NEVER SAY DIE

editorial by Wayne Green

RE-REGULATION VS. DE-REGULATION

The FCC's request for input on what rules we want for ASCII transmission is unfortunately typical of the FCC's response to any amateur need. They want to know what new rules to make.

The basic fact, which seems almost unable to perk through to them, is that we do *not* want more regulations. Our problem has been regulations prohibiting our experimenting with and using ASCII—and other modern techniques for information exchange. We want to have the rule prohibiting ASCII deleted—we are not looking for regulations to permit it.

We want to be de-regulated, not re-regulated.

Many of us remember just four years ago when the FCC decided that deregulation for all their services would be a good thing. The regulations were getting so profuse and confusing that it took a battery of lawyers to hack through them. And, since we hams had brought the matter up at a hearing before the FCC in January, 1974, they agreed that they would use amateur radio as a sort of pilot project of deregulation. Well, the pilot light went out somewhere and the FCC fell back into its old habit of generating rules instead of erasing them.

RADAR ZAPPING

How many of you are aware that every time the police zap you with their radar to check your speed, they are irradiating you with a dose of microwaves which is 5,000 times that permitted to leak from a microwave oven? It is no wonder that many policemen have been having eye and ear troubles which they attribute to their mobile radar units.

Now, you may not care whether you are zapped or not, but would you want your wife and unborn child to get repeated doses of microwaves? We are just beginning to discover how sensitive the fetus is to microwave irradiation, to X-rays, etc. There are a growing number of scientists who are convinced that such unnecessary radiation should be prohibited. One dose might not cause anything discernible . . . nor two . . . but how many times do we get dosed with radar waves? I don't know about you, but I rarely am able to drive 20 miles in New Hampshire without one or two exposures to radar waves. This gives me a cumulative dose of hundreds of exposures, and, as far as we know, these things are cumulative.

With any encouragement, I would found a Church of the Pure Body and one of the basic religious rights I would demand would be a freedom from being irradiated by radar waves. I would print up pads of confession sheets for members of my Church to have with them. When their radar detectors indicate that they have been irradiated against their will and against their religious principles, they would stop and get the signature of the radar officer attesting that he had indeed violated their religious beliefs and had, against their will, irradiated them and their families.

Whether such violations of my belief in a Pure Body could be upheld in court or not, I don't know. But I do know that if enough people want to protest irradiation, they can raise hell with the system.

VTR: TIME-SAVER

At first, I used the video tape recorder as a way of saving programs which I had been on . . . and as a way to keep from missing shows or movies which were shown while I was away at a ham or computer show, at a club meeting, or perhaps visiting an advertiser. Now I record almost all shows before watching them.

Perhaps you've noticed that the stations sell an incredible number of commercials to pay for those blockbuster movies. As you get on into the movie, you are stopped more and more often for larger and larger bundles of commercials. They run them so often that there is no way to go to the bathroom that much, or even to restock on snacks, so the only thing left is to watch the seemingly endless string of commercials. When watching a recorded movie, all I have to do is fast-forward the tape past the commercials and watch the film almost without interruption.

It didn't take very long before I got so used to avoiding the commercials that I hated to watch a movie directly . . . so now I record all of them. I find that it saves me about half an hour of time on a two-hour movie. That's more time for hamming or computerizing . . . and I still get to see the movie.

JULY WINNER

Our July $100 bonus check goes to Karl Thurber W8FX/4, whose article "Enjoy All Five Bands" was voted most popular according to our Reader Service card ballots.

73 Magazine is published monthly by 73, Inc., Peterborough NH 03458. Subscription rates in the U.S. and Canada are $18 for one year, and $36 for three years. Outside the U.S. and Canada, write for rates. Second class postage paid at Peterborough NH 03458 and at additional mailing offices. Publication No. 700420. Phone: 603-924-3873. INCLUDE OLD ADDRESS AND ZIP CODE WITH ADDRESS CHANGE NOTIFICATION. Microfilm edition—University Microfilm, Ann Arbor MI 48106.

But guess who's working on UHF SSB? Good old FCC. See IEEE *Spectrum*, July, 1978. And who is looking on this proposal with horror? General Electric. They are still in there fighting (but for FM this time). Maybe they'll win this one.

Jack Althouse K6NY
Escondido CA

SIBILANCE

I must say that the August "Never Say Die" may well be your best and eventually most fruitful editorial insofar as goes improving amateur voice communications and perhaps the entire commercial radiophone medium! It now seems clear that we were prematurely sold a bill of goods in SSB.

As a radioman in Alaska in the 1950s, I shared spectrum data with two visiting FCC frequency coordinators, Messrs. North and Krebs, to help them formulate recommendations on frequency changes in Alaska.

Mr. Krebs, now retired and perhaps still living in Silver Spring MD, had attended a symposium where the synchronous detection of DSB was demonstrated. Most enthusiastic over what he saw and heard, Mr. Krebs mailed us a set of technical papers on DSB which since have been lost. It is hoped his attention might be obtained through your editorial. Perhaps a ham in Silver Spring could locate Mr. Krebs and the technical material on DSB.

As an old hand of 25 years in the Alaskan commercial AM phone networks between canneries, it is most galling today to hear these same persons who used AM striving on SSB for accuracy by constantly repeating important figures and descriptions because of the transparent deficiencies of SSB.

If nothing else, DSB should greatly improve speech and, hopefully, elevate individual voices so that all of us do not sound as if we were born with identical vocal cords, devoid of the sibilance required to clarify speech. Twenty meters would be an ideal area to experiment with synchronous detection of DSB. Let's get cracking!

F. W. Anderson W7AR
Seattle WA

MISSIONARY TACTICS

Wayne, you are fast becoming a world traveler, but I think you should tour the U.S. a little more in order to completely understand the attitude of the African black bloc as far as amateur radio is concerned.

While the dark continent thinks of ham radio as a white man's hobby, with negative feelings about the whole matter, there are those blacks in the United States who view the situation in pretty much the same way. And this view has blown itself across the ocean and displayed itself among African nations.

Having done research on black hams in America, it is quite interesting to learn just how few there are. The reason for this is that when white hams learn the operator is black, he has no particular desire to "buddy-buddy" with him or carry on a QSO. Therefore, potential black hams who could also contribute to the cause of amateur radio feel left out of the mainstream of another event. Do not for one moment think the African nations are not aware of such prejudices in amateur radio in this country.

I once lived in Chicago and actually witnessed these accounts. If Chicago has over 100 black hams, I would be certainly surprised. Rockford, Illinois, has only one active black ham (a city of 147,000 people). While we were doing a local area survey, it was discovered that only a minute percentage of black hams were what we term "gung-ho" active.

Wayne, before we go trying to convince the Africans how great ham radio is, we'd better practice some of those missionary tactics you are proposing to ARMA over here. I don't know how one would expect results from WARC next year if all hams do not feel united.

Jack Chancellor W9SON
Rockford IL

THE VILLAIN

Good for you, WØHKF—you took the words right out of my mouth. I could not have said it better. In its way, *73* is a really good magazine, but it could be better if Wayne Green would just lay off the ARRL. I wonder what his real aim or objective is. Is it to destroy the only real voice we have in amateur radio and try to replace it with his—heaven forbid! Wayne reminds me of little two-bit politicians just starting out—all they have to offer is criticism of the incumbent—nothing they do or have ever done is right. Possibly just to draw interest, is Wayne trying to be the villain in professional wrestling? I have been in amateur radio and a solid member of the ARRL for well over 50 years, during which time I have seen many other ham magazines come and go. Most of the time they made the mistake of attacking the ARRL. They try to fool their readers into thinking the ARRL is asleep at the switch and doing nothing for amateur radio. Now, is there anyone better qualified to represent us? Wayne should lay off the ARRL and concentrate on improving his own magazine, or my present subscription will be my last.

Merrill Eidson W5AMK
Temple TX

IMPRESSED

I want to thank you for the hospitality shown by your people toward Karen and me during our visit to *73* in August. That's quite an operation you folks are running.

Our special thanks go to Ms. Doni Jarvis. Despite the fact that we simply dropped in on *73* with no notice, she broke her routine to give us the "twenty-five-cent tour" and made us feel welcome. We appreciate it.

For a long time now you've been raving about the Peterborough area. You certainly weren't kidding. It's probably the nicest area we've *ever* seen. I'm looking into buying some property there—that's how impressed we are.

My new 3-year subscription to *73* should tell you how impressed I am with your magazine.

So, from the snottiest human in the U.S. Army to the "snottiest SOB in the ham radio world"—thanks. Hang in there, and keep giving them hell.

Maj. Larry Palletti KA7ABC
Lt. Karen Palletti KA7AHZ
Sierra Vista AZ

6M GUIDANCE

Perhaps you could help to guide 6 meter FM out of impending trouble by publishing some frequency guidelines for those unfamiliar with the channel increments which have been in use throughout the country for the past 15 years. As you know, Wayne, being one of the "pioneers" yourself, the FM channels were set up in 20 kHz (or 40 kHz for WBFM) increments from the alternate national calling frequency of 52.64 MHz, with the exception of the primary national frequency of 52.525 MHz.

The repeater splits have not really been agreed to. Some have been running 200 kHz, 600 kHz, or 1 MHz. The problem that is occurring stems from a repeater plan using 1 MHz splits starting with 52.01/53.01, 52.03/53.03, etc. Some new-

see page 316

comers to 6 FM have been utilizing this plan, which puts repeater outputs 10 kHz away from established 20 kHz spaced channels. I would therefore suggest 52.02/53.02, 52.04/53.04, etc., as a modification of this plan for compatibility, since, as we have learned from 2 meters, 15 kHz is not ideal spacing for ±5 kHz NBFM, to say nothing of 10 kHz adjacent channels.

John R. Haserick W1GPO
Tolland CT

TEXAS DEFENSE

I read Wayne's report some time ago about "unfriendly" repeaters in Texas. I can't imagine whom he talked to or which repeaters he meant, but please give us another chance some time. Friendly repeaters, hams, and people can be found in and around Austin TX.

Ron Johnson WA5RON
Austin TX

ADVANCED FREQUENCIES

I believe your printing company has made an error in the July, 1978, issue of *73*.

On page 186, in the second column under "FCC," at paragraph 97.7 (the operator's privileges vs. licenses), your table shows that frequencies 3800-3890 kHz are for Extra licensees only. As a holder of an Advanced ticket, I am sure this privilege has not been taken from us!

The last *four* lines of this table should, I believe, be frequency privileges for amateur Extra *and Advanced* licenses.

Fred Collings W2GTN
Avalon NJ

Fred, you're not the only one who picked up the apparent error. However, it appeared exactly that way in the Federal Register. *We're confident that it is a mistake, but with the FCC, you just never know.—J.D.*

RTTY Loop

Marc I. Leavey, M.D. WA3AJR
4006 Winlee Road
Randallstown MD 21133

The winter is coming! With the change in weather should come increased on-the-air time for many of us on RTTY. The essence of receiving an HF RTTY signal has been covered here before, but one assumption was always made—that you started with a perfectly-tuned-in signal. This month we will discuss ways to achieve that goal.

For those of you working AFSK on the VHF bands, once you have acquisition of a signal, the tones are as correct as the transmitting station can make them. For you, there is no problem, so go read Wayne's editorial; the rest of you, stick with me. The goal here will be to tune the demodulated FSK to produce the proper audio tones for optimum converter performance. If you are blessed with perfect pitch, it's easy. Just have the sending station transmit a mark, tune to 2975 Hz, and you're all set. If you are not so blessed, however, it is not quite so easy. Yes, you could use a frequency counter on the output of your receiver to measure the frequency of the tone produced during mark. There are several reasons why this is not practical. To begin with, any static or garbage, anything less than a solid signal, would be difficult to count with the accuracy required for RTTY. Further, few stations routinely send long marks for you to tune on, unless you ask them. And if you ask them, you're already in communication, so why bother! What you need is a way to tell if you have tuned in an actively shifting FSK signal correctly, and maybe even some way of telling if the shift is appropriate.

One of the early solutions to this problem is evident in the design of the W2PAT converter, a circuit first popularized in the 1950s. The output of each detector, mark and space, was fed through a neon bulb, such as an NE-2. This served two functions. First, the conductance characteristics of the bulb shaped the impulse to give a sharp edge to the keying impulse. Just as importantly, the lighting of the bulb gave visual proof that a signal was being decoded. By tuning the FSK signal until the mark and space lamps smoothly flickered back and forth, one was reasonably assured of a properly-tuned-in signal.

Hams being what they are, and the state of the art constantly thrusting forward, a tuning indicator using a 6AF6 "Magic Eye" was described in the late 50s by W1FGL. This simply used the eye tube to pick off and display the decoded pulses, much as the neon lamps had done earlier. Because they were not subject to the abrupt turn-on and turn-off points of the lamps, however, they were more sensitive in tracking a drifting or off-tune signal.

Another major modification to the indicator effort came about when it was realized that the signals available at the filter outputs of most converters could be fed to a conventional oscilloscope's horizontal and vertical inputs. The pattern produced is frequently called the "cross" or " + ", with the mark signal typically represented by the vertical pattern and the space by the horizontal, although there is some individual variation about this. No special oscilloscope is needed for this, and it is very easy to implement. The diagrams show how to connect up a scope and some typical patterns.

Another kind of oscilloscope display, although appearing similar to the above, is quite a bit more complex. This is the "X" display produced by a phase detector. Although popular some years back, the complexity needed to produce a display of two lines, at 45° and 135°, is more than most hams require.

A final kind of razzle-dazzle scope display is an audio spectrum analyzer, as described in 73's new *RTTY Handbook.* This displays the audio spectrum along a horizontal axis, with vertical pips representing each received frequency. Verrrrry interrrrresting!

Of course, one does not have to have an oscilloscope, winking eye, or flashing lights to tune RTTY. Meters are quite serviceable and can be used to receive a signal. Although most hams have a meter in the 60 mA loop, this really cannot be used to tune the signal. This is because the meter does not reflect the input, but rather the output after all processing has taken place. Also, the flickering of the meter, between nearly full scale and zero, is too rapid to be interpreted during normal transmissions. If, however, the output of one of the detectors is inverted so that they are both of the same polarity, they can be applied to a meter directly. This is the technique used in the popular HAL ST-6, designed by Irv Hoff W6FFC. The signal is tuned until the meter peaks and holds steady, indicating maximum output through both filters. The method is elegantly simple and works quite well.

Although this is, admittedly, a brief overview of the tuning and indicator devices in use and available to the amateur RTTYer, I hope it provides some guidance to the ham contemplating adding an indicator to his station. It would seem that, for general use, one of the oldest systems around, the " + " pattern scope, may be one of the easiest to implement and interpret. It requires a minimum of exotic equipment, the converter, and a garden-variety oscilloscope, which most hams have around. Useful information is readily obtained from the display, and no changes are needed for different shifts, assuming the TU filters are changed appropriately.

THANKS TO THE READERSHIP DEPARTMENT

In July, 1978, we passed along the information that K4FRY needed information to run the Kenwood R599/T599 on RTTY. A letter received from Norm Tetreault KX6HC/W1FO passed along the following information:

"For reception, the R599 is in the LSB mode with CW filter switched in. This results in an audio output band of 1230-1770 Hz. I tuned the PLL in my TU to work in this band. An article in the September, 1973, issue of *RTTY Journal* (see below) describes a technique to move the band to about 2200 Hz.

"For transmission, the solution is simplicity itself. Both the R599 and the T599 use the identical vfo. The receiver has a front panel incremental tuning control (RIT), while the transmitter does not. Scrutiny of the receiver and transmitter schematics will show that both have an identical voltage regulator assembly (AVR). In the transmitter, point 'RT3' is unused. In the receiver, it is connected to the RIT pot. Connecting a resistor from RT3 (on the transmitter AVR) to ground causes the vfo to shift in frequency. A value of 39k causes about a 200 Hz shift. I installed a 22k right at the RT3 point and brought the lead out on a blank pin of the cable connector in the rear of the transmitter." Norm drove the modification with TTL logic, but there is no reason that a reed relay or similar circuit could not be used if your system is not TTL-based. A 50k pot or so is used in series with the 22k resistor to "fine tune" the shift to 170 Hz.

A review of the *RTTY Journal* article, entitled "Using Kenwood R599 Receiver for RTTY," by Bill Craig WB4FPK dem-

Continued on page 30

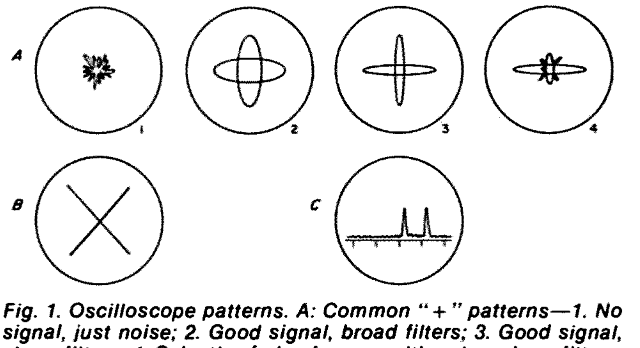

Fig. 1. Oscilloscope patterns. A: Common " + " patterns—1. No signal, just noise; 2. Good signal, broad filters; 3. Good signal, sharp filters; 4. Selective fade of space with noise, sharp filters. B: Cross pattern of phase detector. C: Spectrum analyzer display.

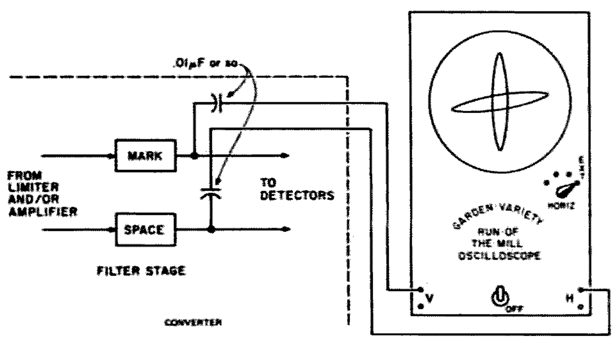

Fig. 2. Diagramatic representation of how to hook up a garden-variety, run-of-the-mill scope to a converter.

Looking West

Bill Pasternak WA6ITF
24854-C Newhall Ave.
Newhall CA 91321

With love in his eyes, he calls them "my kids." True, most of them are children, but there are a good number who are well past childhood. Whether two or sixty-two, they are all "his kids" and are held together by a common bond. They all suffer from a ravaging disease called muscular dystrophy. Many of the younger ones will never reach adulthood unless a miracle of medical science takes place—unless a cure is found for this "killer." It's Labor Day, 1978, and on the TV screen is the "clown." Possibly the greatest humanitarian this country has ever known stands before you in hope of raising enough money so that research into the cause of MD can continue, so that doctors can find a way to cure "his kids." It's the annual Labor Day MDA Telethon, and the host is a rare human being named Jerry Lewis.

About two years ago, I had the honor of briefly meeting Jerry in the lobby of the Sahara Hotel in Las Vegas. I was attending SAROC, and Mr. Lewis was the headline attraction at the hotel's "Congo Room." It was a very brief encounter, but as a result the idea hit me that there might be some way that this nation's 300,000 amateurs could take part in his next telethon. So, while in Las Vegas, Bill Orenstein KH6IAF and myself spoke with a person from the Telethon and made our suggestion.

Shortly after arriving back in L.A., we were contacted by the local MDA people. A meeting was arranged at the North Hollywood Holiday Inn between the MDA people and members of the local amateur community. We sat and discussed different ways in which amateur radio operators could involve themselves in the Telethon, and one thing was soon obvious. While the MDA needed our bodies, as individuals and collectively as clubs to solicit funds for them, they did not need our repeaters or HF SSB kW stations. They did not need that form of "communication." What they needed was for people like you and me to give of ourselves and to convince our friends and neighbors to give as well.

Ever try to sell such an idea to a group of hams? To tell them they, not their radios, were wanted? That though the event itself was necessary, they could do little with their radios? It was an impossible sales job, and soon the idea died due to lack of support from the local amateur radio community. As a local CB club president came on camera and handed the local emcee a check for $14,140 which his club had collected from local CBers, I again remembered our attempt two years ago to involve amateur radio in this worthwhile effort.

The rest of the afternoon, I was bothered by something. Why could "CB" be so successful in these ventures while amateur radio never seems to quite pull it off? Sure, we handle disaster communication better than CB could ever hope to. We seem to handle any type of communications effort with more proficiency, so why is it that in cases such as this CB has it all over us? Simply stated, it's that the MDA Telethon is not a communications effort in the same sense of the word "communications" as we amateurs know it. But communication is more than just speaking into a microphone or pounding brass in order to be heard by another amateur halfway around the world. There is another more important meaning—the ability of one human to interrelate with another.

In the case of Jerry's kids, the best way in which we can communicate is in the same way as that of the Los Angeles CB community and millions of other non-radio-oriented Americans: by pledging a few of our hard-earned dollars and then trying to convince our friends to do the same. There is no need for two meter handhelds or high power SSB stations. All we need is a little love in our hearts to become part of Jerry's "Love Network," a television network made up of 213 TV stations and millions of human beings like you and me who care about our fellow man.

I would like to suggest that local radio clubs who are interested in getting amateur radio involved in the MDA campaign contact either the local MDA people or the TV station which carried this year's Telethon. Don't try to tell them what a great communications vehicle you are. They don't need your local repeater or club station. What they need is you. The local fund-raising personnel from MDA will know how to direct you in fund-raising endeavors, and you can then modify things to suit your own talents. Some ideas I came up with included radio equipment auctions, where the proceeds are donated to MDA in the name of your club, or T-hunts where there is an entrance fee which becomes your club's donation. Also, don't go into such a project seeking glory for yourself or the amateur service. To do so would be defeating the purpose of the whole thing. If you involve yourself and/or your club with MDA or any other worthwhile charity, there must be only one motive: love. If your devotion is real, recognition will come your way. You won't have to go looking for it.

THE SIMPLEX AUTOPATCH REVISITED

In the many years I have been writing Looking West, no one topic has ever brought the response that our reporting on John Walker's simplex autopatch has generated. The magazine had barely hit the newsstands when the letters started to roll in—and they have yet to stop. Most of them requested specific information as to how to build one, information I do not possess. I have tried to at least answer all requests and have forwarded same to John. Hopefully, he will soon have a technical article prepared; if all goes well, you should see it soon in *73*.

In the meantime, I would like to request that any information requests on any topic be accompanied by an SASE; I also would like to thank all those who were thoughtful enough to enclose one. They're not for me—rather, I forward them along with information requests to the source from which such information must originate. With postal costs continually on the upswing, an SASE is one way to ensure getting an answer to your questions.

One piece of information that our postal person brought was that John is not the only person who has successfully developed a working simplex autopatch. In his note, Bob Nickels WAØOHO, owner of WRØAEA, let us know that he has had such a system in operation for some time and that "it works beautifully." Bob noted that he is involved in patent filings and did not detail the overall system, but he did note with some pride that his idea did not develop in "Silicon Gulch." So, thanks to Bob's works, Nebraska has one heck of a technological advancement as part of its area amateur operation. Kudos to people like John and Bob who consider the future a challenge and help take amateur radio and overall technology another step forward.

ANSWERING THE CRITICS DEPARTMENT

Bob's letter also took us to task a bit for limiting our coverage to the southwestern United States, with only occasional attention paid to happenings outside this area. I can't and won't deny that this is the case. As I wrote to Bob, and to others who have brought up this matter with me, it's simply a matter of economics. Unlike reporters who work for large national news gathering services or TV networks, I have no expense account. I do not work for *73*, but rather function as an independent Associate Editor. Therefore, I must rely on input supplied from areas which are out of the reach of one or two tanks of gas. In other words, it is you who read Looking West who are my prime source of input for future columns. There is no way that I can come to you, so I must rely on you to come to me via the U.S. mail. I have said it before, but I'll say it again. If there is something which you feel is newsworthy, something you feel would be of interest to your fellow amateurs, something you feel would benefit all of us, send it to me. Send it directly to my home address and please enclose a phone number so that I can get back to you if I need more details. Also, don't get alarmed if you write me in mid-November and don't see your information in the December column. There is a sixty-day-plus lead time.

T-HUNTING AND DEALING WITH JAMMERS DEPARTMENT

The latest item to come into the search for those who would destroy the ability of this area's amateurs to communicate is known as the Doppler scan DF unit. This was first described in the June, 1978, *QST*, and a number of units were built and modified for even better performance by a number of local amateurs, including Paul W6AOP and Don WA6MHN. These two people have become L.A.'s resident experts on the unit. Not a day seems to go by when I don't overhear one or the other describing another improvement to the original design. Many such units are under construction or are in service already. It's interesting to note that as more of these units enter operation, the overall level of malicious interference drops. Whether it's directly related to the emergence of such units or mere coincidence is anyone's guess, but the fact remains that the overall interference level drops as a given system sets up to T-hunt with these units.

Paul Wirt W6AOP, who once

Continued on page 30

DX

Chuck Stuart N5KC
5115 Menefee Drive
Dallas TX 75227

DX PROFILE

If you regularly work the low end of the 20 meter phone band, then you have probably heard the booming signal of Don Winfield K5DUT, the Dirty Ugly Texan from Cowtown, Texas. Cowtown is a small rural village 30 miles west of Dallas, sometimes called Ft. Worth.

Don's interest in amateur radio began in 1956 when, as a teenager, he picked up a local ham breaking in over the music on a small crystal set he had built. When Don heard the local give his address, he jumped on his bicycle and rode over for a visit. From that visit came an intense interest in amateur radio, and a new Novice license soon resulted. His first rig, built on an old apple crate, was a 6L6 running 20 Watts on 80 meter CW. Hardly an omen of what was to come, it took Don a month to work out of Texas.

Don's interests in amateur radio over the years have been many and varied ranging from rag chewing to RTTY. He is currently on RTTY with a home-brew display system that will also copy and display CW at speeds up to 150 wpm. He is also active on 450 with fast scan TV and on the HF bands with high speed (60 to 100 wpm) CW with his video display and keyboard.

Don only became interested in DX about five years ago when he also began developing an interest in the mysteries and powers of the cubical quad antenna. He first began DXing on 40/80 with simple wire antennas, but soon found himself on the low end of 20 with a multi-element triband beam. It was while he was sitting in a pileup one day calling and calling without results that he realized there had to be a better way.

He had heard that quads made good DX antennas, particularly at lower heights, so he decided to try one. Don soon replaced the multi-element triband beam with a two-element quad, and he says the difference was immediately apparent. Figuring that if a little was good, then more was better, the two-element quad was soon replaced with a four-element model. After a period of testing that included a four-frame expanded quad on 145 MHz, the four-element quad was replaced with the present six-element "Cowtown Monster Quad" shown in the photo. Don has written several articles describing this "Monster Quad," and many copies have been built and erected. Don not only has used this antenna to work some 300 countries, but also has obtained Single Band WAZ with it, as well.

Don also has several interests outside of amateur radio. His latest interest, and one that has taken up most of his time, is experimental aircraft and aerobatic flying. He says two meters is great from 10,000 feet, but the wind noise in an open cockpit is terrible.

Other interests include microprocessors (he is building a microcomputer) and playing the stock market. The stock market is the only form of gambling that is legal in Texas.

Don has held an amateur Extra Class license for several years as well as a Second Class Radio Telephone license which is required in his present employment. He is also single, which is probably a requirement for his involvement in so many interests.

During his spare time, Don is putting together a magazine article describing the unique elevator system he uses to raise and lower his quad for tuning and adjustments. Look for it in a future issue of your favorite ham publication.

Next time you hear K5DUT on 20, give him a call and ask him to tell you about cubical quad antennas, if you have an hour or so to spare, that is.

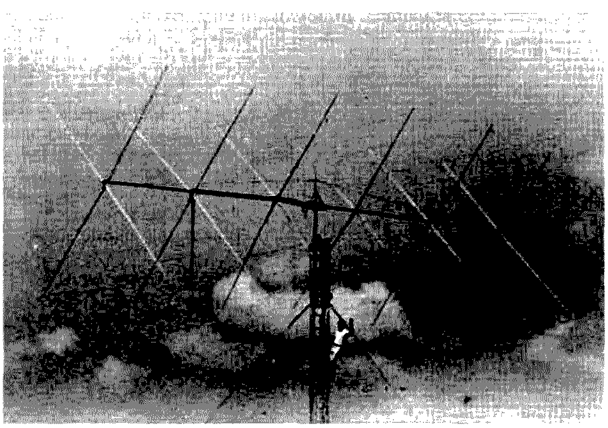

K5DUT and the original "Cowtown Monster Quad." Notice the unique system used for raising and lowering the quad.

NEEDED LISTS

"Needed Lists" are always interesting because you can compare them with what you need and see how you stand. They also show the difference in what is considered "rare DX" in different parts of the world. Caribbean island stations, for instance, are considered very rare DX in Japan, while HS and S2 are considered backyard DX. The following list was compiled by the VE "Canad-X" and shows how things look from a Canadian point of view.

1. 8Z4—Neutral Zone
2. VP8—South Sandwich (see text)
3. YI—Iraq
4. BY—China
5. 3Y—Bouvet
6. SY—Mt. Athos
7. VS9K—Kamaran
8. Spratly
9. VU—Laccadives
10. XZ—Burma
11. 7J1RL
12. Geyser Reef
13. ZA—Albania
14. Abu-Ail
15. FR7—Juan de Nova
16. 7O—South Yemen
17. A51—Bhutan
18. FB8W—Crozet
19. XU—Cambodia
20. STØ—Southern Sudan
21. VU—Andamans
22. A7—Qatar
23. VK9—Cocos/Keeling
24. VKØ—Heard Island

DX NOTEBOOK

South Sandwich—LU3ZY

This one showed during May and was worked by a number of Europeans. LU1DZ has confirmed that it is a legitimate operation and says there will be more to come. A permanent station will be set up in the South Sandwich group sponsored by The Groupo de Argentina Radio Club, which will also handle the QSLs. Watch for this one toward the end of the year.

Dodecanese—SV1JG

If you happened to work this one during the last couple of months, then you snagged a rare Dodecanese contact. If you haven't worked him yet, check 14200 after 1500Z and again after 0400Z. QSL to Box 564, Athens, Greece.

Ecuador—HC5EE

Rick was back in Michigan last August and hoped to be able to pick up some SSTV gear to take back to Ecuador. Check the regular SSTV frequencies to see if he found any.

Southern Sudan—ST8RK

Hans is back in the Southern Sudan and will be there for a couple more years. Beginning November 1st, the ARRL will accept STØ cards for DXCC credit retroactive to May 7, 1972. STØRK QSLs to DL7FT.

United Nations Building—4U1UN

This is another one that will be accepted for DXCC credit beginning November 1st. Hans de Henseler is the regular operator and the best time to look for a contact is during the noon lunch hour there in NYC. Max states that for the present time they cannot keep schedules and only those on the staff are allowed to operate the station. QSL to the United Nations Staff Recreation Council, Amateur Radio Club, United Nations, Box 20, New York, New York 10017.

South Georgia—VP8PL

Commercial duties take up most of his operating, but this one can still be found around 14220 in the evenings.

Serrana Bank—KS4

A group of W9s including W9UCW, WA9EYY, K9RA, K1PBW, and HKØBKX plan to activate this one in January. The plan is for a four-day operation. More on this one next month.

Burma—XZ2

Although there hasn't been any legitimate operation out of Burma in quite a while, some are still trying. Tomaz-Plotr Rogowaki SP5AUC is reported to be headed there for a job in the Polish embassy. He expects to be there for several years and will be requesting permission to operate. While the chances are slim, he plans to take a transceiver along just in case.

Rwanda—9X5NH

This one is often found on 14265 at 0330Z working a list through DL8OA. He is still trying to fill out his WAS and needs both North and South Dakota. If you need Rwanda for a new one, just mention Dakota and you are sure to get attention.

Franz Josef Land—UK1PAA

It is time for the regular rotation of the crew manning this rare Russian outpost. It is hoped that the new crew will

Continued on page 30

New Products

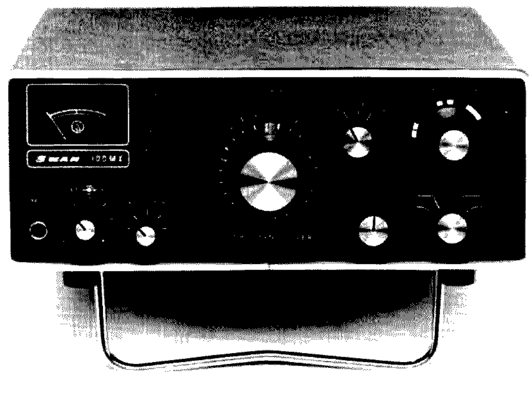

Swan's 100 MX.

FAST SCAN ATV TRANSMITTER/CONVERTER

PC Electronics has put their ATV modules into a single attractive enclosure for those who are more interested in operating than building. All that is needed with the TC-1 is a Technician or higher-class license, a TV set tuned to channel 2 or 3, a 450 MHz antenna, and a video source such as a closed circuit TV camera, computer video, or tape recorder.

The TC-1 ATV transmitter/converter contains a sensitive tunable 420-450-MHz-to-channel-2-or-3 converter. No modification to your TV set is necessary to receive fast scan ATV, because the same standards as broadcast are used. DX with good antennas up at least 35 feet and 10 Watts of video is about the same as you get on 2 meter FM simplex with 25 Watts.

The transmitter section runs 10 Watts peak output on either 439.25, 434.0, or other specially ordered ATV frequencies. With this unit, computer alphanumerics, graphics, and color can be transmitted, as the modulator has a bandwidth of 8 MHz. Play Pong, Star Trek, etc., over the air. Talk back on two meter FM. Also included is 4.5 MHz subcarrier sound with enough gain and compression to allow walking around the shack, camera in hand, with the microphone up to 25 feet away.

For the answers to any ATV questions or for their catalog of modules for do-it-yourselfers and cameras, send an SASE to *PC Electronics, 2522 Paxson, Arcadia CA 91006.*

NEW SSB MOBILE TRANSCEIVER FROM SWAN

A new 100-Watt minimum PEP single sideband mobile transceiver has been introduced by Swan Electronics, a subsidiary of Cubic Corporation.

The 100 MX mobile transceiver is completely solid state and incorporates state-of-the-art design and styling.

It features a highly reliable, extremely stable permeability tuned oscillator (PTO) with 1 kHz readout resolution, built-in noise blanker and VOX, semi-break-in continuous wave (CW) with sidetone, receiver incremental tuning (RIT) control, and 25-kHz built-in calibrator and preselector for transmit and receive.

Weighing 13 pounds, the 100 MX mobile transceiver measures only 3.75" H x 11.75" D x 9.75" W.

Modes of operation include USB, LSB, and CW.

Frequency ranges for the new unit are: 80 meters (3.5-4.0 MHz), 40 meters (7.0-7.5 MHz), 20 meters (14.0-14.5 MHz), 15 meters (21.0-21.5 MHz), and 10 meters (28.5-29.0 MHz).

Extended frequency coverage in 500-kHz segments of the 10 meter band (28.0-28.5; 29.0-29.5; 29.5-30.0) is achieved by replacing the standard crystal with an optional crystal for the desired segment. No realignment is required.

The receiver sensitivity is better than 0.35 uV at 50 Ohms for 10 dB signal plus noise-to-noise ratio for all bands. Audio output is four Watts into a four-Ohm load. Audio bandpass response is 300 to 3000 Hertz.

Provisions for an external speaker or headphones are on the rear panel, and a gimbal-type mobile mount is included as standard equipment.

For additional information, contact: Chuck Inskeep, director of marketing, *Swan Electronics, 305 Airport Road, Oceanside CA 92054; telephone: (714)-757-7525.*

CSC INTRODUCES $19.95 LOGIC PROBE KIT

Continental Specialties Corporation is setting a lot of troubleshooting trends with the sleek, versatile logic probes already part of The Logical Force™ line of digital troubleshooting hardware. The newest of these logic probes is the LPK-1 Logic Probe Kit.

Features of this new probe include separately-driven high, low, and pulse indicator LEDs; .3 megohm input impedance; input overload protection; pulse stretching and indication for pulses as fast as 300 nanoseconds; reverse voltage protection; and a 0°-50° C. operating range.

Complete and easy-to-follow illustrated assembly instructions are included, as well as an owner's manual describing operation of the probe.

For further information, contact *Continental Specialties Corporation, 70 Fulton Terrace, New Haven CT 06509; (203)-624-3103.*

NEW DIGITAL AC AMMETER IS FIELD-SCALABLE

The new Slimline ac ammeter can be easily field-calibrated to operate with any standard 5-Ampere secondary current transformer. The wide-range coarse and fine calibration controls will handle all standard transformer ratios, so these meters can be kept on the shelf and calibrated when they are put into service.

A built-in calibration source eliminates the need for external calibration standards or voltage sources. The installer simply adjusts the unit for the ratio of the current transformer.

Continued on page 227

PC Electronics' new ATV transmitter/converter.

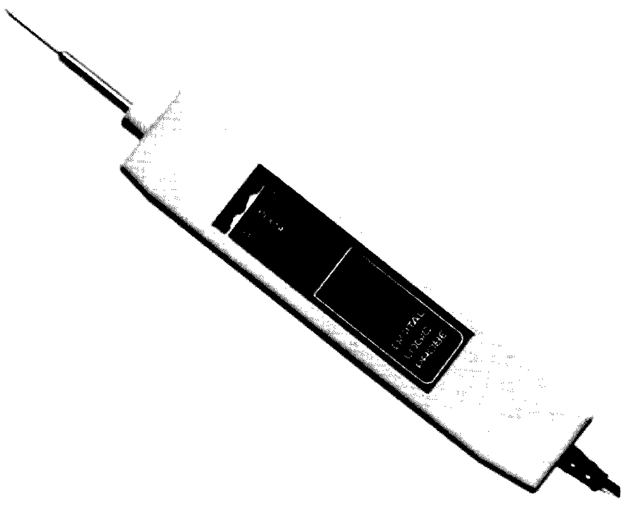

CSC's LPK-1 logic probe.

CONTESTS

Editor:
Robert Baker WB2GFE
15 Windsor Dr.
Atco NJ 08004

MARC SILVER JUBILEE CELEBRATION
Starts: 0000 GMT November 4
Ends: 2400 GMT November 5

Sponsored by the Mountain Amateur Radio Club, Cumberland MD, to commemorate the club's Silver Jubilee. Stations may be worked only once regardless of band or mode. Repeater contacts are not valid.

EXCHANGE:

RS(T) and state or country.

FREQUENCIES:

3540, 3910, 7040, 7240, 14040, 14295, 21110, 21360, 28110, 28600.

AWARDS:

A special multi-colored QSL card for contact with W3YMW, the club station. Silver Jubilee Certificates will be awarded to any amateur who contacts five members of MARC. Mailing deadline is Dec. 31. Include a large SASE for QSL cards or certificates. Entries should be mailed to: John P. Fanelli, Jr. WA3WSW, 609 Piedmont Ave., Cumberland MD 21502.

ARRL SWEEPSTAKES
CW
Starts: 2100 GMT Saturday, November 4
Ends: 0300 GMT Sunday, November 5
Phone
Starts: 2100 GMT Saturday, November 18
Ends: 0300 GMT Sunday, November 19

Sweepstakes is sponsored by the ARRL and is open to all amateurs in the US, US possessions, and Canada. No more than 24 hours of operation are permitted during the 30-hour contest period. Time spent listening counts as operating time and off periods may not be less than 15 minutes. Times on and off as well as QSO times must be entered in the log. Each station may be worked only once, regardless of band.

CLASSES:

All entries will be classified as either single- or multiple-operator stations. Single-operator stations will be further classified by input power: Class A = 200 Watts dc or less, Class B = above 200 Watts. All ARRL-affiliated clubs may also participate in the club competition.

EXCHANGE:

Number, precedence, your call, CK, and ARRL section. Send A for precedence if power is 200 Watts dc or less, otherwise send B. For CK, send the last 2 digits of the year you were first licensed.

SCORING:

Score 2 points for each completed QSO. Final score is sum of QSO points multiplied by the total number of ARRL sections plus VE8 (max. 75).

AWARDS:

Certificates will be awarded to the highest-scoring Class A entry and the highest-scoring Class B entry in each section, provided there are at least 3 single-operator entries or the score is 10,000 points or more. Certificates will also be awarded for high-scoring Novices and Technicians. Multi-operator entries are not eligible for certificate awards and will be listed separately in the results.

FORMS:

It is suggested that contest forms be obtained from the ARRL, 225 Main St., Newington CT 06111. All entries with 200 or more QSOs must have a cross-check sheet to check for duplicate QSOs. Each log must show date, QSO time, times on/off, exchanges sent and received, band and mode.

Note: These rules were taken from last year's contest.

INTERNATIONAL OK DX CONTEST
Contest Period:
0000 to 2400 GMT
Saturday, November 11

The participating stations work stations of other countries according to the official DXCC Countries List. Contacts between stations of the same country count only as a multiplier, but 0 points. All bands from 160 to 10 meters, CW and phone may be used. (OK stations are only licensed to operate CW on 160 meters.) Cross-band as well as cross-mode contacts are not valid.

EXCHANGE:

Exchanges consist of a 4- or 5-digit number indicating the RS(T) and ITU zone.

SCORING:

A station may be worked once only on each band. A complete exchange of code counts one point, but three points are awarded for a complete contact with a Czechoslovak station (except as noted above for stations in the same country). The multiplier is the sum of the ITU zones from all bands. Final score is then the sum total of contact points times the multiplier.

CATEGORIES:

A — Single operator, all bands; B — single operator, one band; C — multi-operator, all bands. Any station operated by a single person obtaining assistance, such as in keeping the log, monitoring other bands, tuning the transmitter, etc., is considered as a multi-operator station. Club stations may work in category C only.

AWARDS:

A performance list of participants will be worked out by the contest committee for each country. A certificate will be awarded to the top-scoring operators in each country and each category. The "100 OK" award may be issued to stations for contacts with 100 Czechoslovak stations, and the "S6S" award (and/or endorsements for individual bands) may be issued to a station for the contacts with all continents. Both awards will be issued upon a written application in the log. No QSL cards are required for either award.

LOGS:

A separate log must be kept for each band and must contain date and time in GMT, station worked, exchange sent and received, points (0, 1 or 3), and ITU zone (with the first QSO for that zone only). The log must contain in its heading the category of the station (A, B, or C), name and callsign, address, and band or bands. Also, indicate the sum of contacts, QSO points, multipliers, and the total score of the participating station. Each log must be accompanied by the following declaration:

I hereby state that my station was operated in accordance with the rules of the contest as well as all regulations established for amateur radio in my country, and that my report is correct and true to the best of my belief.

Logs must be sent to: The Central Radio Club, Post Box

CALENDAR

Nov 1	**YL/AP Phone**
Nov 3-4	**Trilliums QSO Party**
Nov 4-5	**ARRL Sweepstakes — CW**
	RSGB 7 MHz CW
	MARC Silver Jubilee Celebration
Nov 11	**OK DX Contest**
Nov 11-12	**IPA Contest**
	Delaware QSO Party
	Missouri QSO Party
Nov 18-19	**ARRL Sweepstakes — Phone**
	All Austria Contest
	Wellesley ARS Anniversary QSO Party
*** Nov 25-26**	**CQ Worldwide DX — CW**
Dec 2-3	**ARRL 160 Meter Contest**
	Connecticut QSO Party
	International Island DX Contest
	TOPS CW Contest
	VU2 DX Contest
Dec 3	**Flatland Farmer 10-X QSO Party**
Dec 9-10	**ARRL 10 Meter Contest**
Dec 16-17	**SOWP Christmas QSO Party**

*** = described in last issue**

A QUICK REMINDER !

Don't forget to send all 1979 contest information *directly to me* as soon as possible for announcement in this column. I should have the information at least three months prior to the event to ensure insertion in the calendar. Also, how about sending abbreviated results or any award information you would like published—as space permits.

HAM OF THE YEAR AWARD

Nominations for the award are due in to *73 Magazine* by November 15, 1978, and are to be 500 words or less, giving the details of the reason for the nomination. See editorial in the September *73* for details.

69, Prague 1, Czechoslovakia — postmarked no later than December 31. A list and map of ITU zones is available for 2 IRCs from the same address.

DELAWARE QSO PARTY
Saturday, November 11
0001 to 0600 and
1600 to 2359 GMT
Sunday, November 12
0001 to 0600 and
1600 to 2359 GMT

Sponsored by the Delaware ARC, the contest is open to all amateurs. Stations may be worked once per band per mode for QSO points.

EXCHANGE:

QSO number, RS(T), and QTH-county for DEL; ARRL section or country for others.

SCORING:

DEL stations score one point per phone QSO, 2 points per CW QSO, and multiply total by number of ARRL sections and countries worked. Others score 5 points per DEL QSO and multiply by the number of counties worked per mode per band (counties = Kent, New Castle, and Sussex).

FREQUENCIES:

CW — 3560, 7060, 14060, 21060, 28160.

Phone — 3900, 7275, 14325, 21425, 28650.

Novice — 3710, 7120, 21120, 28160.

ENTRIES AND AWARDS:

Appropriate awards are given to the top scorers and a special certificate is given to all stations working all three Delaware counties if requested. Logs with earliest postmark will determine award winners in event of tie! Mailing deadline is Dec. 15 to: Sandy Cuccia WB3ENF, 7 Sorrel Dr., Wilmington DE 19803. Include an SASE for results or W-DEL certificate.

IPA CONTEST
Saturday, November 11
0800 to 1000 GMT,
1400 to 1700 GMT,
and
1800 to 2000 GMT
Sunday, November 12
0800 to 1000 GMT,
1400 to 1700 GMT,
and
1800 to 2000 GMT

Sponsored by the International Police Association Radio Club — German Section (IPARC), the contest is designed to enable participators to work the Sherlock Holmes Award (SHA). The contest is open to all radio amateurs and SWLs. Members may work anyone; nonmembers may only work members. General call is "CQ IPA." Cross-band and cross-mode contacts are not allowed. All contacts must be on CW or SSB.

EXCHANGE:

Non-members send RS(T) and serial number. Members send IPA, RS(T), and serial number.

SCORING:

Every completed QSO counts 2 points on 80/40 meters, 4 points on 20/15/10 meters. Stations may be worked once per band. Multiplier is number of IPA countries per amateur band. Final score is QSO points times multiplier. An IPA country is counted for multiplier and QSO only if an IPA station in that country has been worked. Contacts with DXCC countries which are not listed in the IPARC membership list count 1 point but do not count as a multiplier.

FREQUENCIES (as allowed):

SSB — 3650, 7075, 14295, 21295, 28650.

CW — 3575, 7025, 14075, 21075, 28075.

AWARDS AND ENTRIES:

Certificates to winners and three highest scores. Any amateur fulfilling the conditions of the SHA50, SHA100, or SHA200 during the contest may apply with application sheet. Approval of 2 licensed hams is not necessary for contest application. SHA rules, IPARC membership list, SHA application sheet, contest log sheet, and contest score or certificates are available from Vince Gambina WB4QJO, 7606 Kingsbury Road, Alexandria VA 22310 — include an SASE with 2 stamps or 2 IRCs, please! Contest entries must be postmarked no later than December 31 and sent to: Adolf Vogel DL3SZ, Ritter-von-Eyb-Strasse 2, D-8800 Ansbach, Germany.

MISSOURI QSO PARTY
Starts: 1800 GMT Saturday, November 11
Ends: 2300 GMT Sunday, November 12

The 15th annual QSO party is sponsored by the St. Louis Amateur Radio Club in an effort to activate some of the hard-to-get Missouri counties. The same station may be worked once per band and mode. Missouri mobiles will count separately from each different county.

EXCHANGE:

QSO number, RS(T), and QTH-county for MO stations; state, province, or country for others. MO mobiles start with #1 from each county activated.

FREQUENCIES:

3540, 3910, 7040, 7240, 14040, 14270, 21110, 21360, 28110, 28600, 50-50.5.

SCORING:

Score 1 point per QSO; MO stations multiply contact points times number of states, provinces, and countries; others multiply by number of MO counties (115 max.). MO mobiles total separate score

Continued on page 88

THE 73 MAGAZINE 10 METER AWARDS

The return of vigorous solar activity means that 10 meters is once again a band to be reckoned with. Ol' Sol's 11-year cycle of sunspot production is about to hit a peak, with the result that QRP 10 meter DX is possible.

Now's the perfect time to convert that old CB rig to 10 (or buy a brand new one from Bristol or Standard) and join the fun. We've had many articles showing you just how easy a CB-to-10 conversion really is. To give you an added incentive, 73 is offering two nifty Certificates of Achievement for 10 meter channelized communications.

For domestic types, there is the 10-40 Award. This one should be pretty easy—just work 40 of the 50 states. The DX Decade Award goes to DXers who work 10 or more foreign countries with a channelized 10 meter rig. We have endorsement stickers, too—the whole bit.

To give everyone an equal shot at award #1, only contacts made October 1, 1978, or after will be valid.

Well, don't just sit there. Get out your soldering iron, order some crystals, and put that CB rig on 10. This is going to be fun, so don't miss out!

RULES

1) All contacts must be made in the 10 meter amateur band using channelized AM equipment. Both converted Citizens Band equipment and commercially-produced units (such as those available from Bristol Electronics and Standard Communications) may be used.

2) To be eligible for award credit, all contacts must be made October 1, 1978, or after.

3) The 10-40 Award is available to applicants showing proof of contact with stations in at least 40 of the 50 United States. A special endorsement sticker will be available to those working all 50 states.

4) The DX Decade Award is available to applicants showing proof of contact with at least 10 foreign countries. Endorsement stickers will be awarded for 25, 50, 75, and 100 countries.

5) A log of stations worked, with the date, time, and type of equipment used for each contact, must be submitted when applying for each award or endorsement.

6) Each application for an award or endorsement must be accompanied by a signed statement that all claimed contacts are valid. No QSL cards need be sent, but they must be in the possession of the applicant.

7) To cover costs, a fee of $5.00 must accompany each application for the 10-40 or DX Decade Award. The fee for endorsement stickers will be $2.00 each.

8) All award applications should be mailed to: Chuck Stuart N5KC, 5115 Menefee Drive, Dallas TX 75227.

RESULTS

RESULTS OF THE 1ST ANNUAL 7-LAND QSO PARTY, 1978

Top Twenty

1.	WB7QEL—Wash.	11.	W7TYN—Mont.
2.	W7GHT—Idaho	12.	VE3KK—Ont.
3.	W7JYW—Mont.	13.	WB7STO—Mont.
4.	WB7EZO—Ariz.	14.	WB0JYF—Iowa
5.	W7YS—Ariz.	15.	W7IEU—Wash.
6.	N7SU—Idaho	16.	WB7WKP—Wash.
7.	W7WMO—Wash.	17.	WB7BFK—Wash.
8.	K7MM—Idaho	18.	W3ARK—Penn.
9.	W7HI—Nev.	19.	JR1UCQ—Japan
10.	WA7NXL—Ariz.	20.	WA4LWO—N.C.

Top CW Entry — W7TYN, Montana
Top SSB Entry — W7YS, Arizona
Top Mixed Entry — WB7QEL, Washington
Highest Score, Worldwide — WB7QEL, Washington
Highest Score, Canada — VE3KK, Ontario
Highest Score, Foreign — JR1UCQ, Japan

RTTY Loop

from page 16

onstrates a rather elegant solution to the problem of an "oddball" bandwidth. As stated above, the original center frequency is near 1500 Hz. This must be increased to around 2200 Hz if "standard" RTTY tones are to be used. Kenwood uses a crystal bfo in the R599, with each crystal series resonated by a 22 pF capacitor and trimmed by a parallel trimmer. Recalling that the same vfo is used in both the transmitter and receiver, it stands to reason that some technique must be used to offset reception on CW to produce a sidetone. What they do is short out that series capacitor! That lowers the frequency of the crystal by about 700 Hz (nice number) and makes for a nice tone in the ears. What's good for the goose, as the saying goes, and the LSB crystal can be similarly attacked. A simple SPST switch, connected to short out the series capacitor on the LSB bfo crystal, will lower it by about 700 Hz and change the center frequency to 2200 Hz (sound familiar?). Like I said, elegant. Flip the switch open, and you're back in LSB. Take it out when you sell, and who's the wiser? They should all be that simple.

Test equipment and other goodies are on tap for the future, with more reader input and writer output. Maybe more microprocessor stuff, too; who knows?

Looking West

from page 18

headed the Mt. Wilson Repeater Association's "Jammer Hunting Effort" and is an expert T-hunter in his own right, was one of the first people to successfully build one of these units, debug it, and put it into operation. He is very excited about the way the Doppler scan system performs (in relation to more traditional T-hunting methods). In cases of unexpected interference, such a unit can be a real blessing since it does not lend itself to removal and reinstallation and therefore is usually left installed in a vehicle ready for operation. Also, since its direction readout is automatic, even "short-term" malicious interference, such as an obscenity or two during someone else's QSO, can be T-hunted with accuracy. Trying to T-hunt such would be difficult at best (and impossible in most cases) using the normal beam or loop technique. With the Doppler scan you merely note your indicator panel and the direction of your vehicle versus true (or magnetic) north, and compute the direction in your head. Readings are continuous, so you get position plots as you drive along. It's then a matter of plotting a number of "readings" to get a fairly accurate area fix.

This leads us to one very important question: "What do you do with him when you find him?" Let us set up a hypothetical case. "WR whatever" has been harassed for some time by someone who insists on wiping out as many stations as he can cover up with his unidentified carrier. The users have been instructed to ignore the interference, but as users will, whenever the interference starts, so do the discussions of it on the repeater—thus adding more fuel to the fire and inflating our jammer's ego. Finally, after months of work, the interference source is T-hunted down and positively identified. What next? Well, this is a hypothetical case, remember. So, let's assume that the nearest FCC office has been contacted and given the information. Some time elapses and there has been no action (as often has been reported to me by amateurs from various parts of the country). Remember, the FCC is a very busy bureaucratic organization with little funding. Amateur radio is getting less and less important to them as time goes on. They operate on a basis of priorities, and while amateur radio is very important to us, I suspect that it's kind of low on their list. So, in desperation, other government agencies are contacted—but none can or will help. Now, to complicate matters, our source of interference realizes that he has been discovered, so he blatantly identifies exactly who and where he is and dares anyone to stop him from jamming. Now, that's as extreme a situation as can possibly develop. The jamming of "WR whatever" continues, though the source, unfortunately an amateur himself, is well known to all. Attempts have been made by the repeater's owner and other amateurs to "reason" with our pet menace—all to no avail. For some reason he hates "WR whatever" and is intent on driving it off the air. If you were facing such a situation, how would you handle it?

I am ending this discussion at this point and posing the above question to you. Without resorting to acts of violence, how would you resolve this situation? Next month I will present my view, and in months to come we will devote space to ideas which you furnish.

THE WALTONS AND AMATEUR RADIO

I was surprised the other evening when I picked up the mail for SCRA/SMA-144 at the Culver City Post Office. Among the many normal requests for repeater channel pairs and repeater lists was one rather interesting letter. It was from a local educator named Glen Woodmansee. He is the Los Angeles city schoolteacher assigned to educate the three children who play "Jim-Bob," "Erin," and "Elizabeth" on "The Waltons." In real life, that is. Anyhow, as a result of exposure to the world of amateur radio, these children have developed an interest in getting their licenses. Hence the reason for the letter, which reads as follows:

> Gentlemen:
>
> The children on "The Waltons" television show go to school on the studio lot; a teacher is assigned by the L.A. School Board to teach them.
>
> I am their teacher and I try to encourage their interests, although the Los Angeles schools don't have much money for such special school situations. My students have become interested in learning amateur radio in real life after being introduced to it in "The Waltons" scripts.
>
> I have no budget for such projects, and thought perhaps the members of your club might be able to help.
>
> Could your newsletter run the following?
>
> Sincerely,
> Glen Woodmansee
>
> "Walton's Mountain School needs your old amateur radio gear. The young people who play the parts of Jim-Bob, Erin, and Elizabeth Walton on 'The Waltons' television show are studying amateur radio in their school on the studio lot, but have no equipment. Your donations to the school, which is administered by the Los Angeles School system, are tax-deductible for the full value of the equipment. Contact their teacher, Glen Woodmansee, at 843-6000, ext. 1403, 1402, or 1567; or write Lorimar Walton School, 4000 Warner Blvd., Burbank CA 91522.
>
> "Also needed: Heathkit's Programmed Instruction Course for the amateur radio license, to borrow for a day. Thanks!"

DX

from page 20

contain some amateurs and that UK1PAA will again be activated.

San Felix—CE0XX

Although permission for this effort by K1MM and N4WW has been received, some thought has been given to avoiding the CQWW DX Contest and scheduling the operation for later in the year. If CE0XX doesn't appear during the contest, then the dates will have been moved back a bit.

Comoro Islands—D68AD

Robin reports that he now has 160 meter equipment and is listening for stateside. Robin is often on 80 CW 0300Z to 0330Z looking for stateside contacts.

Somali

The situation here continues to improve after a long DX dry spell. Several DXers in the area have applied for a 601 license now that political tensions in the area seem to be easing somewhat. Watch the low end of the 20 meter phone band for this one.

Peter Island

This one is beginning to shape up into a real possibility for early next year. The operator will be Willy DeRoos, a Belgian, who is the only person ever to navigate the Northwest Passage single-handedly. Willy is taking along a Kenwood TS-500 and a three-element beam and plans to be there for about a year signing 3Y0BZ.

Ueno Island

This one would appear as a possibility for another new one. It is located in the far South Pacific and is sometimes hard to find on the map. A scientific group is scheduled to head that way sometime in the next year

Continued on page 46

John L. Webster VP2DN
University of the West Indies
St. Augustine
Trinidad, West Indies

Electro Sculpture

—be a radio Rodin

What do you – the average ham, electronics experimenter, or repairman – do with dud or defective components? Throw them in the dustbin? If your answer is yes, pause a while and look at the photographs in this article. With a little creativity and the junk collector's urge, both of which are essential prerequisites to being a good ham, you can put these components to an interesting use and give them a second life. A life that may in many ways prove to be more interesting than the former one.

Actually, if you get the XYL hooked on this one and forget to keep the shack locked, then you may find your parts stock being rapidly and mysteriously depleted. You may even fire up the trusty old rig one evening to be met by a barrage of sparks . . . close examination of the charred remains may reveal several of those beautifully striped resistors and brilliantly colored capacitors have taken up permanent residence elsewhere. But not to worry! Here again you can fall back on the old adage, "Prevention is better than cure." Before you bait the line for the XYL, spend a few dollars on some of those "Barrel Kits" offered by firms like Poly Paks, Inc., at very reasonable prices. It's also a good opportunity to stock up on usable parts.

Poly Paks guarantees a 50% yield of functional, or part functional, devices, and, in my experiences, I have been very satisfied, with the guarantee being met and usually exceeded in most cases. Well, assuming that you have either accumulated a good collection of duds previously, or have purchased several Barrel Kits, you are ready for action. Take a close look at the photos and then get started.

The three musicians (not Musketeers!) illustrated here were made entirely from defective electronic components soldered together to produce the desired shapes. Almost anything may be

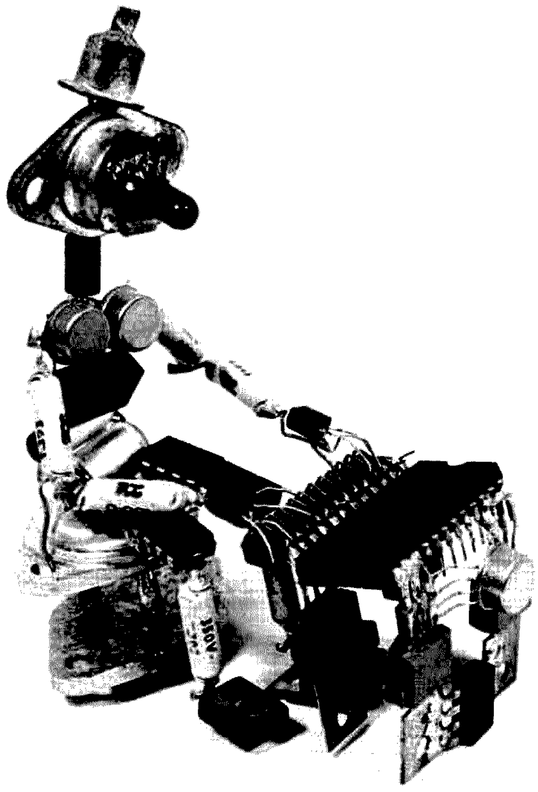

The Organist. Note use of DIP ICs and TO-220 transistors to form the organ.

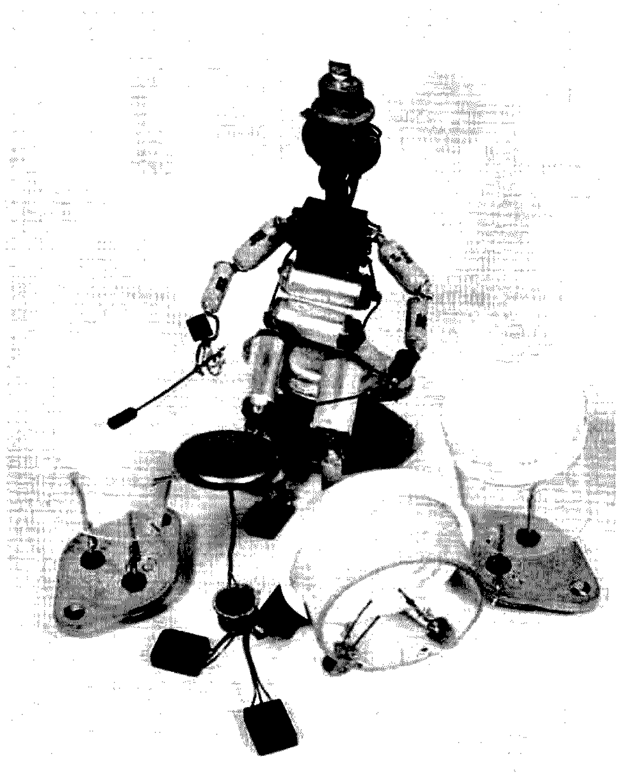

The Drummer. Note use of TO-92 transistors to form hands and fingers. Drumsticks are diodes, cymbal is TO-3 case top, and drums are pill bottles.

The Guitarist/Vocalist. Note use of LED for nose and dipped tantalums for eyes. Guitar is made from TO-3 transistor, TO-220 transistor, and DIP ICs. Microphone is germanium transistor.

sculpted in this way, provided a pinch of creativity is added.

Previous experience has shown when sculpting figures that:

(a) Tiny dipped tantalum electrolytics, usually blue or green in color, make excellent eyes.

(b) LEDs are perfect for noses – Rudolph the red-nosed . . . ?

(c) TO-92 transistors are ideal for hands, with the leads representing fingers (only three though, maybe Martians).

Unique greeting cards may also be made by gluing components onto sturdy cards in the desired pattern. Such a project may be given a finishing touch by including a functional crystal radio complete with earphone, which is revealed on opening the card. I once made such a card for the XYL's birthday just after she became interested in amateur radio, but I do not have an illustration of it available. The same principle may be utilized to produce pictures to decorate the walls of your shack.

Those of you interested in the game of chess may create a rather original game, using "tired" thermionic valves as the chessmen. What a way to fire up those "soft" 807s you have hidden away in the garage! Also, it may be the only way to illustrate to your grandchildren what a thermionic valve looked like.

These ideas have been presented here to get you moving, and I hope the accompanying photographs will fire your imagination, encourage you not to dump your defective components, and start you soldering. ■

Ralph M. Hirsch K1RH
172 Newton Road
Woodbridge CT 06525

The SUMSUE Method

—determining code speeds . . . accurately

Want to know how fast you sent that last QSO? Did you ever wonder how to adjust your keyer for an exact speed for CW practice? Here is a simple precise method that requires only an ordinary timepiece with a sweep second hand. No counters, no scopes, nothing fancy; just a clock and a curve.

What do we mean by CW speed, anyway? As far as ham radio is concerned, it is the number of five-letter words, in plain English text, that can be transmitted in one minute. We must also include certain mandatory spacing between characters, words, and even between the dots and dashes in the in-

A		B	C	D	E	F
A	.-	5	781	805	793	3965
B	-...	9	128	162	145	1305
C	-.-.	11	293	320	306.5	3371.5
D	-..	7	411	365	388	2716
E	.	1	1305	1231	1268	1268
F	..-.	9	288	228	258	2322
G	--.	9	139	161	150	1350
H	....	7	585	514	549.5	3846.5
I	..	3	677	718	697.5	2092.5
J	.---	15	23	10	16.5	247.5
K	-.-	9	42	52	47	423
L	.-..	9	360	403	381.5	3433.5
M	--	7	262	225	243.5	1704.5
N	-.	5	728	719	723.5	3617.5
O	---	11	821	794	807.5	8882.5
P	.--.	11	215	229	222	2442
Q	--.-	13	14	20	17	221
R	.-.	7	664	603	633.5	4434.5
S	...	5	646	659	652.5	3262.5
T	-	3	902	959	930.5	2791.5
U	..-	7	277	310	293.5	2054.5
V	...-	9	100	93	96.5	868.5
W	.--	8	149	203	176	1584
X	-..-	11	30	20	25	275
Y	-.--	13	151	188	169.5	2203.5
Z	--..	11	9	9	9	99
TOTAL						61781

Fig. 1. A = Character and code composition; B = Number of elements in character including element spacing; C = Distribution based on 10,000 letters of literary text (Ohaver); D = Distribution based on 10,000 letters of literary text (Meaker); E = Average distribution per 10,000 letters of literary text; F = Number of elements per 10,000 letters.

dividual characters. Unfortunately, not many of us have a vocabulary consisting of words with exactly five letters, so we must find some norm that will allow establishment of a standard. By definition, the dot is the basic element of a character upon which all other parts of the individual characters and the word structure are based. Alone, it cannot be called a baud, because it is really only half a baud. So, rather than confuse the issue, let's talk in terms of "elements," with the dot having a value of 1, the space between dots and dashes within the character also having a value of 1, the dash 3, the spacing between characters 3, and the spacing between words 7.

Okay, so how do we find out how long a "word" is? A mathematical analysis of the 26 letters of the English alphabet (Fig. 1, column B) shows the average length of a character to be 8.3 elements. Now, it would seem that if we simply multiply the average character length of 8.3 times 5 (41.5), then add 3 elements for each of the 4 character spaces (12), plus 7 elements for the word space since it must be included in our time frame, we end up with a word length of: 41.5 + 12 + 7 = 60.5 elements.

Right? Yes, for 5-letter random code groups, but wrong for plain language. Hams speak in more or less ordinary English. Sure, we throw in lots of abbreviations, and perhaps more "Q", "X", and "Y" letters (such as XYL, for instance) than appear in English literary text, but nobody has compiled character distribution tables in "hamese," so we are forced to take the word of the experts for distribution of characters within 10,000 letters of standard English literary text. But even they don't agree, as you can see in Fig. 1, columns C and D, so we averaged them out and came up with the distribution in column E, plus the element count in column F. Now we find that the average letter is about 6.18 elements, rather than 8.3. Substituting in the above formula, our word length is now: 31 + 12 + 7 = 50 elements.

All we have to do is find a word that has exactly 50 elements in it, and we are in business. For years the word PARIS has been the standard. It contains 43 elements in character elements and character spacing, but it does require a rather accurate 7 element spacing between words, and it must be sent more than once. It is simpler to send PARISE, which contains exactly 50 elements whether sent alone or in strings. The standard word can be any which will add up to exactly 50 elements. I have chosen the word SUMSUE rather than PARISE, as it is easy to transmit and has a nice rhythm. However, to gauge your speed with only one SUMSUE is difficult. You have more accuracy and a better average when you send several, so I have plotted a curve, Fig. 2, which gives exact speeds based on a string of 5 SUMSUEs. To determine your speed for a specific keying device setting, send five SUMSUEs with no extra spacing between words, that is, one long word, and carefully note the time required in seconds. Then locate this time on the horizontal scale of Fig. 2, come up until you intersect the curve, move to the left, and read the words per minute (wpm) on the vertical scale. For example: If it takes 15 seconds to send 5 SUMSUEs, your speed is exactly 20 wpm. If you wish to set your device to a given speed, pick that speed on the vertical scale, move to the right to intersect the curve, then move downward to find how many seconds it should take to send 5 SUMSUEs. If you wished to send at 13 wpm, speed up or slow down your device until you can send 5 SUMSUEs in 23 seconds and your speed will be precisely 13 wpm. Experiments with standard English text, actually counted after setting a keyer by the SUMSUE method, proved the system works.

So the next time you are asked, "How fast are you sending?", you can say with confidence what you know your speed to be. You can also impress your fellow hams who have not read this article. But remember, for the curve to be accurate, you must have the proper weighting of your dot-dash ratio of 1:3 and your dot-element spacing must also be 1:1. ■

Character	Elements
S	5
(CS)	3
U	7
(CS)	3
M	7
(CS)	3
S	5
(CS)	3
U	7
(CS)	3
E	1
(CS)	3
Total	50

CS = Character Space. Note: The 7 element word space is represented by the 1 element "E" and the CS preceding and following it.

Plot Points For Curve

Wpm	Time in seconds to send 5 SUMSUEs
5	60
7.5	40
10	30
13	23
15	20
18	16.5
20	15
25	12
30	10
35	8.5
40	7.5
45	6.5
50	6

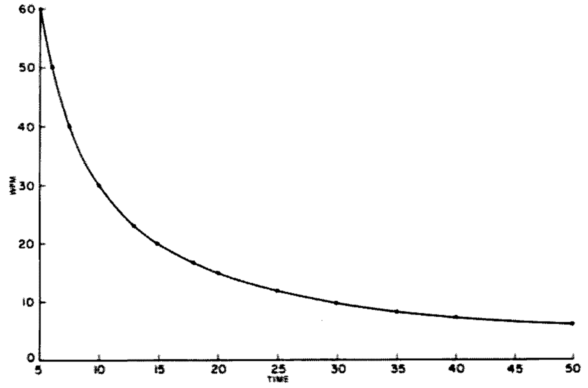

Fig. 2.

The UART Gear Shifter

—for multi-speed RTTY

James B. Wilson, Jr. KB8CE
5886 DeMorrow Road
Stevensville MI 49127

I'm one of those amateurs who enjoy shortwave listening. I like to listen to shortwave broadcasts, news, and feature stories. Recently, however, my SWLing took on a new twist. I have been monitoring RTTY press transmissions.

Once I was hooked on receiving press RTTY transmissions, it wasn't long before I discovered that most of the stations weren't using the standard amateur speeds or shifts. I took care of the frequency shift problem by modifying my terminal unit for 425 Hz shift. This covers most of the press transmissions, with a few still using 850 Hz shift. My next problem was the speed. I looked into gears and found that it got kind of sticky trying to change gears for each new station! A Model 28 can be modified for a mechanical gear shift. However, the funds at my QTH indicated that a Model 28 was out of the question at the present time. I'm still saving for one! The only solution then was this thing called a UART.

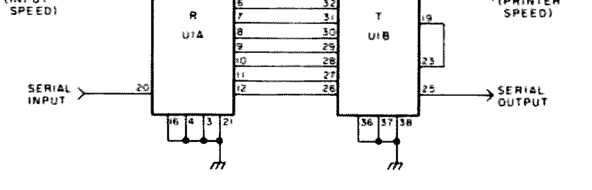

Fig. 1. AY-5-1013 UART.

When I decided to go with the UART, I started gathering all available information on this device. I found out some very interesting things. Firstly, UART stands for Universal Asynchronous Receiver/Transmitter. It seems that this UART takes the serial input data, in this case from the terminal unit, and converts it to parallel data. This parallel data is then applied to the transmitter section, where it is converted back into serial data and then applied to the printer. The speed change occurs due to the clock rates. Both the receiver and transmitter have to be clocked by an external oscillator. The receiver is clocked at the incoming signal speed. The transmitter is then clocked at the *desired* output speed. This particular speed converter

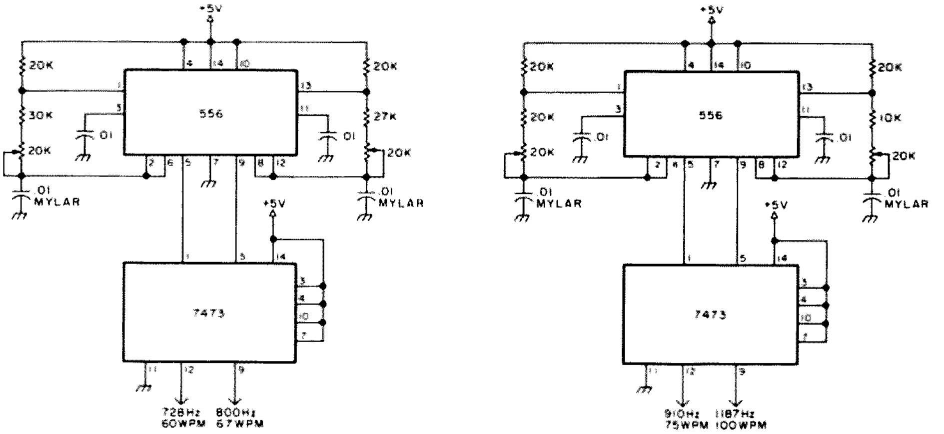

Fig. 2. Clocks. All resistors ½ W.

has no provision for converting the speed down. That would require storage of data between the receiver and transmitter. If the receiver was taking in data at a speed of 100 wpm and the transmitter was reading it out at 60 wpm, there would soon be a pileup of data between the two. In the case of press transmissions, the input data would be at a constant speed. This would mean that an extremely large memory would be required to implement a down converter. If a Teletype™ keyboard is the input, as in some previously published articles, the memory could be much less, as the input data would not be at a constant 100 wpm.

Having thought all this through, my next step was to gear my Model 15 for the highest speed possible (at this time 75 wpm, although I have located some 100 wpm gears), and to build a speed converter using a UART. I wanted the speed converter to be a stand-alone unit, mostly because I didn't want to modify any existing gear and also because I had some extra rack space to fill! Making it a stand-alone unit meant that a power supply, Teletype loop, and input interface from the ST-5 loop would have to be included as well as the UART circuitry.

Fig. 1 shows the actual UART circuitry. Not much to it, is there? I'm using an AY-5-1013 UART, as it was available at a reasonable price. U1A represents the receiver section and U1B the transmitter. The connections 5 through 12 on the receiver and pins 26 through 33 on the transmitter are the parallel data lines. This one is shown connected for 8 bits of data. Since Baudot code uses 5 bits of data, it is only necessary to connect pins 8 through 12 to pins 26 through 30. I have mine connected as shown for a possible change to ASCII.

If you are interested in the whys and wherefores of the other pin connections, I shall refer you to the references at the end of this article or, better yet, to the UART data sheet. The UART shown in Fig. 1 is connected for one stop bit, five data bits per character (Baudot), and no parity bit.

The clocks for the UART, shown in Fig. 2, were of particular concern to me. Originally I wanted to use a crystal-controlled clock. Nothing but the best for my project! But when I started to look for parts, I found them very difficult to obtain, if not downright impossible. A colleague convinced me that the NE555 timer was very stable and could be used in this application. So I decided to try the NE556 dual timer chip for my clock. I must report completely satisfactory results with these chips. They were very easy to design and set up. I added 7473 dual JK flip-flops as a buffer and to make the square waves symmetrical. However, this may not have been necessary. The frequencies shown are the frequencies at the output of the JK flip-flops. On initial setup of the speed converter, I used a frequency counter to set the frequency and have not had to adjust it since, even after a 600-mile move and two months in cold storage! So I would say that the NE556 timers have worked exceptionally well.

The switching arrangement is shown in Fig. 3. It is fairly self-explanatory: one switch to set up the receive or input speed, and one to set up the transmitter or output speed. It is only necessary to set the transmitter speed once, as the printer is only geared for one speed. In an updated version, the transmitter or printer speed switch could be eliminated and its speed hard-wired.

The frequencies for the clocks were calculated using the formula: freq. = baud rate × 16. The factor of 16 comes from the UART itself. The baud rates for 60 wpm = 45.5, 67 wpm = 50.0, 75 wpm = 56.9, and for 100 wpm = 74.2.

The input is designed to interface with a standard 60 mA loop, in my case directly from the ST-5. It uses an optoisolator, in my case a GE 4N35 which I found at my local supply store, much to my surprise. Most any optoisolator should work in this configuration. The optoisolator takes the high voltage current loop and converts it down to TTL levels so that the signal will be compatible with the UART. Getting the RTTY signal down to TTL levels has proven to be quite useful. I have already added a TTL RY generator to the speed converter; it was extremely easy since I only needed to patch it into the input of the UART. This would be true for a lot of the other interesting RTTY projects that have been published. The circuitry for the input interface is quite simple and straightforward, as you can see from Fig. 4.

The output interface is shown in Fig. 5. It uses a 7437 as an output buffer for the UART. This is required because the UART output can only stand one TTL load on it or it will

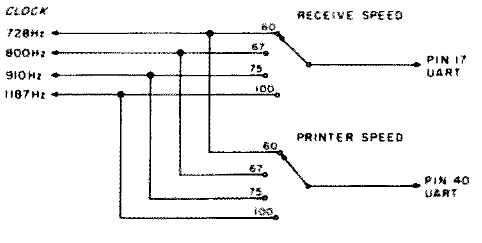

Fig. 3. Switching.

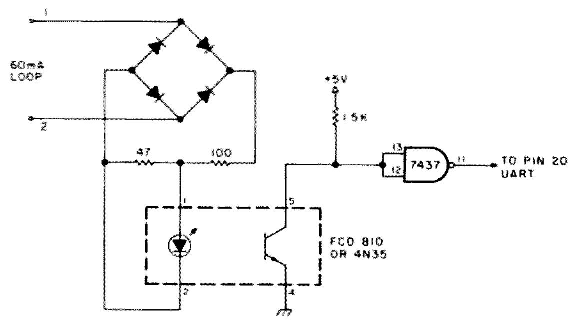

Fig. 4. Input interface. All resistors ½ W.

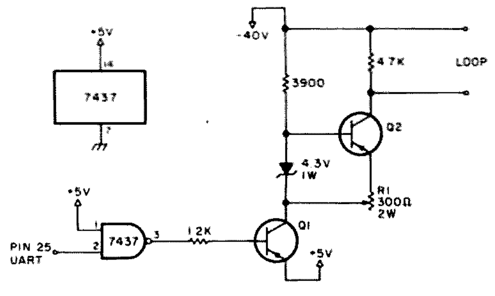

Fig. 5. Output interface.

cease to function. The loop keying transistors, Q1 and Q2, are 2N2528s. These are some TO-3 case transistors I found in my junk box and they work quite well; they do require a sufficient heat sink. I used the chassis as a heat sink in this project. Other suitable transistors are 2N174s, 2N277s, 2N251s, and 2N1501s.

The unusual thing about this output interface is that it uses only a 40-volt supply. I did this to take advantage of the power supply transformer I already had in the unit to power the TTL components and the UART. To get away with using a 40-volt loop supply, I used a special transistor keying circuit and wired the printer magnets in parallel. Wiring the printer magnets in parallel meant that the loop current would have to go up to 120 mA. There are several advantages to be gained by this. When you place the printer magnets in parallel, the total inductance is cut by one-fourth! Let me explain. The magnets are originally in series. This means that the total inductance is the sum of both inductances. When we place them in parallel, the total inductance is reduced to half of one inductor's inductance, if both magnets are equal. This gives us a better keying waveshape on the loop. It also allows us to use a smaller, more convenient power supply. See reference 1(b) for a very interesting discussion of this circuit.

The power supply, shown in Fig. 6, is relatively straightforward. I try to make power supplies as simple as possible, primarily because it seems they are always the one to give me trouble. The UART requires -12 V dc and +5 V dc. These are both supplied by IC regulators. I use the hefty K series here, which may be just a little bit of overkill. The 40-volt loop supply comes off a capacitor which charges to the peak of the incoming voltage. In practice, the output loop voltage does drop somewhat, but this has not been a problem with this particular unit. If there was a larger current drain on this supply, then it would be necessary to use a voltage doubler or separate transformer.

This unit was constructed using perfboard and point-to-point wiring. As I usually construct only one each of my projects, it has been much more convenient to use perfboard. It is also a lot easier to modify the unit when getting the bugs out, or when adding on or improving. The layout is not critical and any convenient method is acceptable.

Operation of the unit is relatively simple. On installation, check all power supply voltages to be sure they are correct. I did have a little trouble with the -12 V dc regulator; it oscillated! The addition of the 50 uF capacitor on the output terminal took care of that. Next you will want to connect your terminal unit's output loop to the input of the speed converter, and the printer to the speed converter's loop.

Wire an ammeter in series with the printer magnets. At this time you may also want to wire your printer magnets in parallel. This is what I have done to take full advantage of the low-voltage aspects of this particular loop keyer. I have used the keyer with the magnets in series and it did work; however, it is recommended that you take the time to wire your magnets in parallel for optimum performance. Set your terminal unit to standby and turn on the speed converter. The loop should have current flowing at this time. Now adjust the 300-Ohm potentiometer, R1, for a loop current of 120 mA. If your magnets are still wired in series, set the loop current to 60 mA. No other adjustments are necessary, although you may need to do some fine adjustments to the timer frequencies for optimum reception at the particular speed.

That's all there is to it. Just set the printer speed to the speed your printer is geared for, ideally 100 wpm, and the receiver speed to the speed of the incoming RTTY signal. Then you can sit back and watch UPI, Tass, Ceteka, Reuters, or any other press service. It's a great way to get the news! ■

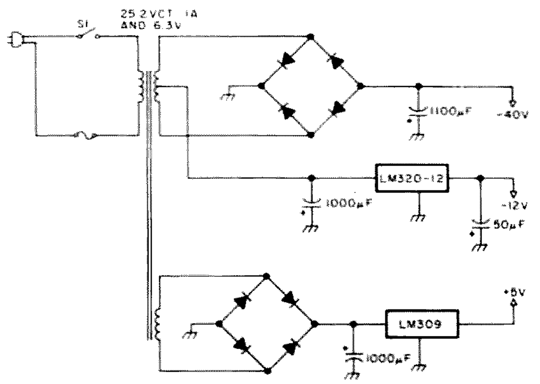

Fig. 6. Power supply.

References

1. *The New RTTY Handbook*, 73, Inc., 1977. (a) "TU2 Terminal Unit," pp. 29-33; (b) "Watching Waveforms," pp. 39-41; (c) "UART Speed Changer," pp. 153-155; (d) "Speed Converter and Processor Using the UART and FIFO ICs," pp. 113-116.
2. *RTTY Journal*. (a) "UART," I.M. Hoff and H.L. Nurse, April, 1974; (b) "Using the UART," I. M. Hoff, H. L. Nurse, P. Satterlee, Jr., May, 1974; (c) "The Mainline UT-2," I. M. Hoff, Feb., 1975; (d) "The Mainline UT-4," I. M. Hoff, Mar., 1975.
3. ARRL Specialized Communications Manual.
4. Data Sheet, AY-5-1013/AY-5-1013A, General Instrument Corporation, March, 1974.

Silence Groaning Refrigerators

—check your house wiring

William Vissers K4KI
1245 S. Orlando Ave.
Cocoa Beach FL 32931

Finding and fixing one poor connection in our house wiring sure solved a lot of problems for me. A dangerous potential fire hazard was eliminated. Heavy QRM disappeared. We won't have to buy a new refrigerator, which means a few extra bucks in the ham budget. Our TV has less "hash" on it, which makes the XYL happy. And finally, I learned to never doubt Ohm's Law; it might be trying to tell you something important. It all started a few weeks ago.

Like most wives of radio hams, my XYL, Dorothy, knows I'm never enthralled when I know that some appliance is getting ready to give up the ghost. So when she told me at dinner a few weeks ago that the refrigerator "sorta groaned" when it started up, I made a mental note that a few refrig in the near future could probably kill dreams of a two meter synthesized rig, as our budget couldn't hack both items this year. She also mentioned that another light bulb had burned out in her sewing table lamp. I muttered something about "Yeah, everything seems to be conking out lately."

A few nights later, Dot said, "That light bulb burned out again; maybe you should look at the socket or something." An examination of the socket and plug seemed to indicate everything was okay, and so I sort of forgot about it.

Well, about a week later, I was told that the bulb had burned out again, and my wife casually said, "When I was sewing this afternoon, it seemed like the light got brighter when the refrigerator came on, and it burned out a few minutes later. I put in a new bulb and it's okay now." I said, "Dear, you probably mean that the bulb got dimmer instead of brighter when the refrig came on, don't you? I think that's the way Ohm's Law works." My XYL has a great respect for Ohm's Law, and she said something about maybe the bulb did get dimmer like I said, but I could see she had a rather puzzled look on her face.

The very next day, my wife, with a look that implied, "Well, you may know about Ohm's Law, but I know what I saw," said, "I watched that bulb today and it got brighter and then burned out when the icebox came on. And I know the refrigerator was on because I got a glass of milk, and I could hear the motor running. And it sure groaned when it started up."

The burned-out bulb was still in the lamp, sure enough, but where was the high voltage coming from that was apparently blowing the bulbs? Didn't Ohm's Law teach that if a load was applied to a circuit, the IR drop in the line would cause the voltage at the load to drop? And a

drop in voltage sure wasn't going to burn out any lamps.

Suddenly, although the light didn't dawn because the bulb was burned out, my brain jumped into gear. Like almost all houses nowadays, we are on a 115/230-volt three-wire, grounded neutral system. Hadn't I once learned about unbalanced loads and a neutral wire? In some unexplainable fashion, the brain cells said something like this: "How about a resistance in the neutral line?" And no kidding, almost like a calculator with a fresh battery, the old brain started visualizing a few numbers representing Amperes racing around the house wiring.

I couldn't wait for the refrigerator to come on by itself. A new bulb was found. I turned the lamp on and told the XYL to turn the refrig to full cold. She did, and I could hear it groan when it started up. And the bulb really glowed a lot brighter, particularly when the icebox started up. I yelled, "Turn the refrig back down," and as she did and it went off, the light bulb went down to normal brilliancy. Eureka!! The problem was solved, at least from a theory standpoint. There had to be a resistance of some sort in the neutral line. But by now my brain had really warmed up and didn't want to stop. It whispered, "bad connection, bad connection; arcing wires; arcing wires cause noise; noise causes QRM." Could this be true?

For months, I'd been bothered by at times truly excessive QRM that sounded like power line noise. Often it would be 20 dB over. But, living in Florida, just a block from the ocean with power lines in front of and behind the house, you expect line noise and QRM. At times during humid weather when the spray deposits salt on the pole insulators, you can actually see the corona at night and also often hear the soft accompanying hiss. What you generally do then is wait for a good rainstorm to wash the salt from the insulators, and quickly try to work some DX before the salt builds up again.

By now I could hardly wait. It didn't take long to make voltage load and no load checks in our house wiring system. Sure enough, up in the attic crawl space was a junction box. The neutral wires were so loose that the connector could be wiggled when I pulled on the cable. The wires were black and the insulation was charred where the poor connection had generated heat. It could easily have turned into a serious fire.

The first thing to do was kill the main power circuit breaker and go back up with a flashlight and some tools. *Never work on a hot circuit!* A good cleaning up and tightening job on all of the wires and connectors showed two others that seemed marginal. When I was through, I came down out of the attic and again enlisted the aid of my trusty wife. We made sure the refrigerator was turned off before turning the main power back on. Everything seemed normal. The lamp burned with normal brilliancy. So now when my wife turned the refrig back on, the lamp output stayed the same. And, better yet, the refrigerator came on with a soft purr—no groaning when it started up. My XYL looked at me as if I were a combination of Edison and Einstein. She almost yelled, "Hey, the icebox seems to work fine again; maybe we won't have to buy a new one!" The dreams of a two meter rig got back into focus again. Good old refrigerator!

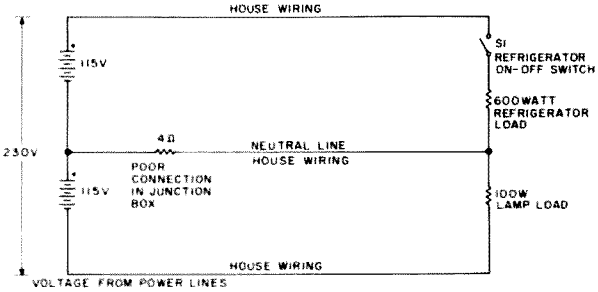

Fig. 1.

Well, now to see how the QRM situation was. I turned on the FT-101-B. At first I thought it had gone dead, it seemed so quiet. Noise was way down, and, although there was some QRM, it sure was a lot quieter than it had been for months. Fixing that one bad connection sure cured a lot of different problems.

After this experience, I talked to some other hams and also to a couple of electricians. It seems that mine wasn't just an isolated hazard, and house fires are often caused by any variety of loose connections. So tighten up and be on the safe side. I was specifically told that oxidation of wires with age combined with cold flow of the metal can cause originally tight connections to go bad. Any heat developed at a poor joint will soften up the metal and speed up the metal flow. It's a vicious cycle. Aluminum wire, because of its relative softness, is generally the worst offender.

A knowledgeable amateur can easily check for loose connections, but in case of any problem, a licensed electrician will do a professional job for you.

Finally, as the behavior of the light bulb seemed so strange when the problem was first discovered, I am presenting a simple three-wire circuit in Fig. 1 to illustrate what happened. Batteries are shown as voltage sources and loads are approximately those that were encountered. The poor connection is shown as four Ohms in the junction box. Analysis of the circuit shows that when the 100 Watt bulb was in the circuit by itself, the voltage across it was 112 volts. But now when the 600-Watt load representing the refrigerator came on when switch S1 was closed, the voltage across the lamp jumped up to 129 volts. And the voltage across the refrigerator input would drop to 101 volts. As the starting current on an ice box is higher than the running current, it's no wonder it groaned. It was lucky that it started at all.

It is realized that the four-Ohm bad connection would vary in resistance, and even a momentary increase in its resistance could cause an even higher voltage across the lamp and an even lower voltage across the refrigerator input. In fact, the worst possible case would occur if a momentary open occurred in the four-Ohm circuit. The voltage across the lamp would skyrocket to 197 volts. And just imagine what such a surge would do to a small appliance or TV if it happened to be on the line. That is why a poor connection can be a real hazard in many ways. If your lights seem to flicker a bit too much when various appliances come on or off, make a few checks. The house and equipment you save from fire or other damage may be your own. ■

Bargain Preamp

—multiple uses for this one

Lou Dezettel W5REZ
3740 Mt. Rainier Drive, NE
Albuquerque NM 87111

Here is the world's best deal in an audio preamp. It has high input impedance for crystal and other high-impedance mikes. It has low output impedance so it will feed into just about any following amplifier, or even through a long shielded cable to an amplifier. It uses a minimum of parts and a bargain op amp IC.

The circuit (Fig. 1) is based on the popular 741 op amp, the µA741. While this number is a Fairchild origination, there are now many manufacturers and it is also part of the HEP line by Motorola, available almost anywhere. The one used in this preamp was purchased on sale from Radio Shack, marked 741C, for only 39¢. The HEP equivalent is Motorola number C6052G, and it performed identically to the Radio Shack special. I tried the RCA CA3160, but it oscillated in this circuit until I added the 150 pF capacitor across the 1-megohm feedback resistor. The RCA CA3160 is a premium-grade op amp meeting military specifications which is cheap enough for this application. The 741 used is in a round TO-99 case and fits a round 8-pin socket. They are also available in an 8-pin mini-DIP form.

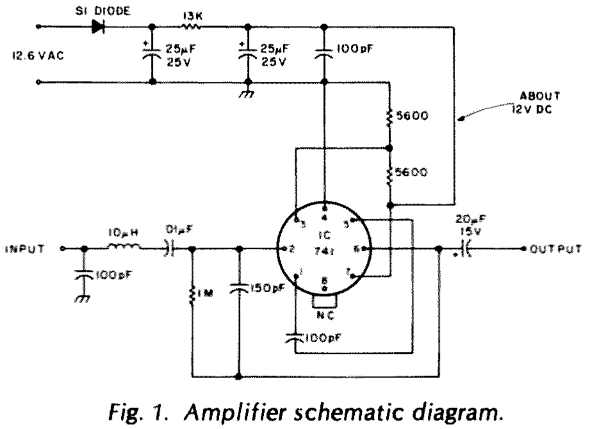

Fig. 1. Amplifier schematic diagram.

The use of the 741 was ideal for my application because it works so well into a low-impedance load. I am replacing a carbon mike used in an RCA Carfone converted to a 2 meter base station. The input impedance to the converted RCA rig is 1,000 Ohms. I could have removed that part of the circuit and fed a preamp directly into the grid of the first audio stage, but I wanted to retain the carbon mike jack and circuit for a secondary mike input because plans call for the use of the crystal mike in a different mobile rig.

Measured frequency response of this circuit is 750 Hertz to 9 kHz at the 3 dB down points. This response is the same whether working into an infinite load or 1,000 Ohms, but gain measurements do differ with load. Voltage gain is 150 (43.4 dB) into a 1,000 Ohm load, but somewhat less into an infinite load. The gain of the amplifier is affected by the feedback resistor between terminals 2 and 6 on the IC. The lower the resistor value, the lower the gain. Without any feedback resistor, the gain can be as high as 100,000, which is obviously more than one needs or can handle without instability.

The 150 pF capacitor across the 1-megohm resistor stabilizes the IC against self-oscillation when using the CA3160, and may be omitted for other 741-type ICs. With the capacitor, the

CA3160 replaces the 741 directly. The only apparent adverse effect is that it extends the frequency response to well over 100 kHz. There is no apparent effect on performance as, obviously, any response above about 5 kHz is lost in the associated circuitry of the equipment with which this preamp is used. On-the-air reports indicate that the voice is clean and crisp, with no distortion.

Because the preamp was designed for use on a 2 meter rig, the input rfc is only a 10 μH (Miller #4612) choke. For lower frequency use, a 1 mH rfc is recommended. Also, a carbon 2,000 Ohm resistor might be just as good, but it was not tried.

The rectifier diode may be any silicon diode except small-signal types. The lowest voltage- and current-rated axial-lead diode will do. Other values of electrolytic capacitors than those listed may be used as long as the capacitance values are reasonably high and the voltage rating exceeds the voltage source by a factor of two.

An ac tap across one of the tubes in the rig is the source of the 12.6 V ac. This was convenient. If 9 to 12 V dc is available from other points of the associated circuit, use it. Omit the rectifier diode, but retain the filter to reduce hum.

Current drain is less than .5 mA. A 9 V battery could be used instead of the ac source, and filtering could be left out. The battery would last a long time.

All small parts, including those of the rectifier-filter system, fit easily on a 2" × 1½" PC board.

The PC board is not an etched-copper board, but a "PC-style" board using Circuitstik stick-on wiring elements. The system consists of pre-made circuit elements such as for transistors, ICs, multi-element connections, wire strips, etc. These have adhesive backs and a protective backing over that. Their board is glass epoxy with perforated holes in a grid with .1" spacing. The hole spacing matches that of the circuit elements. A circuit is made by stripping

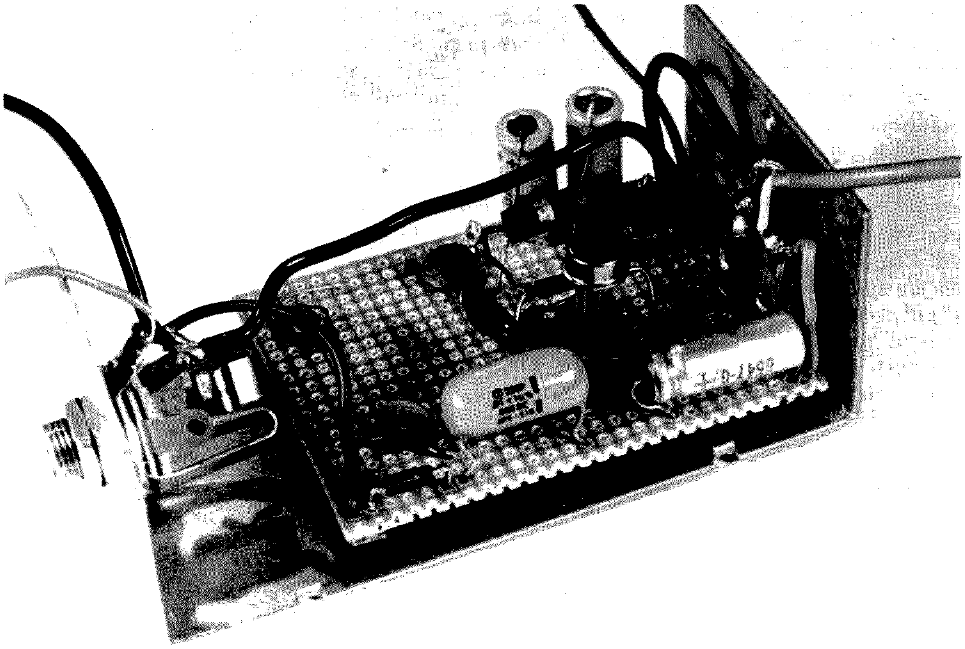

Completed amplifier with cover off 4" × 2" × 1½" aluminum case. The glass-epoxy board measures only 2" × 1½".

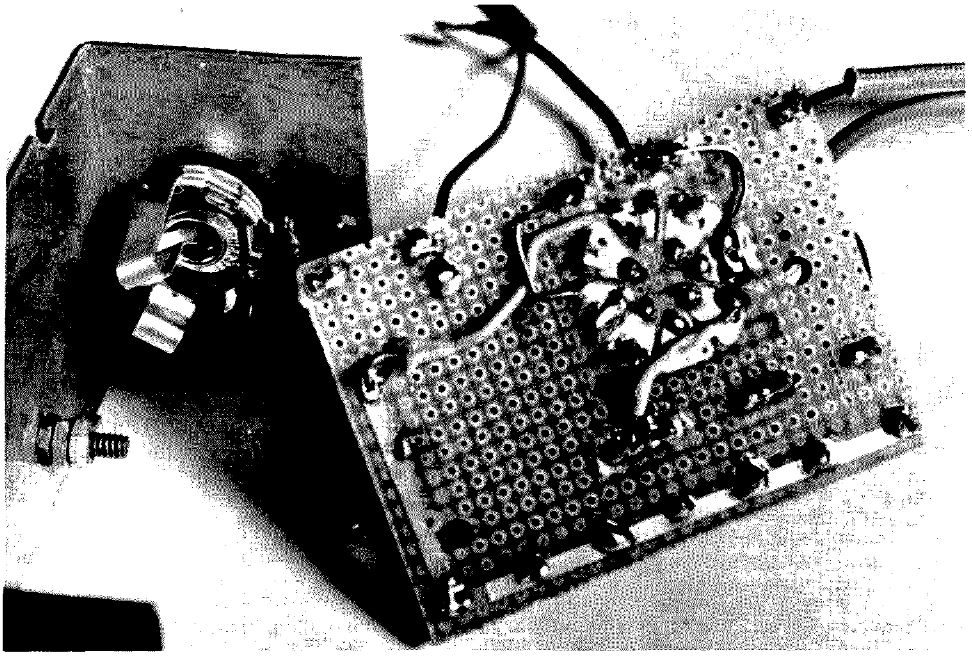

Bottom side of perfboard. The .1"-spaced holes match the Circuitstik wiring elements. It looks and works like etched circuitry, but the wiring elements are stick-on and eliminate etching.

Amplifier Parts List

- 1 741 IC
- 1 Silicon diode, HEP R0050 or equivalent
- 3 100 pF capacitors
- 1 150 pF capacitor
- 1 .01 uF capacitor
- 1 20 uF, 15V dc electrolytic
- 2 25 uF, 25 V dc electrolytic
- 2 5600 Ohm, 1/4 W resistors
- 1 13k Ohm, 1/4 W resistor
- 1 1 megohm, 1/4 W resistor
- 1 10 uH rfc
- 1 8-pin IC socket

Mike jack, PC board, and parts based on your choice.

the protective backing from the circuit pieces and applying the circuits to the board. The same circuit planning and layout as for printed circuitry is required, but the need to etch copper from a copperclad board is eliminated. Circuitstik is available at most large electronic supply stores. Of course, the usual etched-type printed circuit may be used, or even point-to-point wiring. For the latter, you may require a larger board and case.

Parts are mounted to one side of the board in the same manner as with any PC board. The leads are soldered on the other side to the metal circuits, which are solder plated for easier soldering. A few jumper wires are located on the bottom side for convenience. Layout of parts is not critical, but it is pretty hard not to follow a straightforward layout from input to output. The three-circuit jack shown in the photo matches the plug on the mike for PTT relay operation.

Two 6-32 screws hold the board to the bottom of the case. Two nuts, or spacers, should be used to support the board above the case bottom to clear the solder hills.

Shielded wire should be used between the output and the input of the associated circuitry, if the distance is more than about six inches.

While the 4" × 2" × 1½" aluminum case into which this amplifier was built is not essential, it does provide good shielding against rf pickup. If the amplifier is made part of its associated circuitry, it may be necessary to add some form of shielding. ■

DX

from page 30

or two, maybe. An amateur could be in that group, maybe. File this one under futures.

Bouvet

Norwegians are planning to activate this one during January. Be prepared!!

Clipperton Island

The group that staged the very successful Clipperton Island DXpedition last March has put together a booklet of the trip. The booklet is softbound and runs 120 pages. It has 80 pictures of the operation, two in color, and the text is in both English and French. The cost of the booklet is $10, which helps to defray the costs of the operation. Order from: Clipperton DX Club, 28 Rue de Savigny, BTA, 91390 Morsang sur Orge, France.

Sable Island—VE1MTA

This one showed early in August signing VGW211. After a week or so of operation and much speculation that Slim was vacationing in Canada, the call was changed to VE1MTA. The operator is Larry and QSLs go to VE1MTA, Upper Air Station, Sable Island, PO Box 40, Elmdale, NS, B0N 1M0 Canada.

CONSUMER REPORTS

Some of the CDR T2-X "Tailtwister" rotors manufactured in 1977 have a problem with the braking system. Those rotors with 1977 stamped on both the carton and the rotor have the old style powdered steel brake wedge and should be modified. Contact Gregg Dodson, the service manager at CDR, for information. The address is: CDR, Fuquay-Varina, North Carolina 27526.

NOVICE CORNER

The very first thing a newcomer to the DX science should do is send some self-addressed stamped envelopes to his district QSL Bureau. For many DX stations, this is the only available QSL route. Although long and slow, sometimes taking two years or more, "QSL via bureau" is a must in many instances. Envelopes should be 5" x 7½" with your call clearly written in the upper left corner in letters about ½" high. Place a single 15¢ stamp in the upper right corner, place the envelopes in another envelope, and mail them to the bureau.

Although it varies from bureau to bureau, you should receive an envelope back about every four to six weeks. The bureaus are staffed entirely by volunteers and sorting is done on a spare-time basis. If your bureau is in your area, volunteer to help. Extra hands are always needed and you get your own cards quicker.

Bureaus identified by a * sell stamped envelopes or postage credits. Send them an SASE for more information.

**First Call Area:* Hampden County Radio Association, Box 216, Forest Park Station, Springfield MA 01108.

**Second Call Area:* North Jersey DX Association, PO Box 8160, Haledon NJ 07508.

**Third Call Area:* Jesse Bieberman, RD 1, Box 66, Malvern PA 19355.

Fourth Call Area (W4, K4, N4): National Capitol DX Assn., Box DX, Boyce VA 22620.

Fourth Call Area (AA4, A4, WA4, WB4, WD4, WN4): Sterling Park ARC, PO Box 599, Sterling Park VA 22170.

**Fifth Call Area:* ARRL W5 QSL Bureau, Box 1690, Sherman TX 75090.

**Sixth Call Area:* ARRL Sixth District QSL Bureau, PO Box 1460, Sun Valley CA 91352.

Seventh Call Area: Willamette Valley DX Club, PO Box 555, Portland OR 97207.

Eighth Call Area: Columbus Amateur Radio Assn., Radio Room, 280 East Broad Street, Columbus OH 43215.

Ninth Call Area: Northern Illinois DX Assn., Box 519, Elmhurst IL 60126.

**Zero Call Area:* WØ QSL Bureau, Aksar-Ben Radio Club, PO Box 291, Omaha NE 68101.

**Puerto Rico:* Radio Club de Puerto Rico, PO Box 1061, San Juan PR 00902.

U.S. Virgin Islands: Graciano Belardo KV4CF, PO Box 572, Christiansted, St. Croix VI 00820.

**Panama Canal Zone:* KZ5 QSL Bureau, Box 407, Balboa CZ.

**Hawaiian Islands:* John Oka KH6DQ, PO Box 101, Aiea, Oahu HI 96701.

Alaska: Alaska QSL Bureau, 4304 Garfield, Anchorage AK 99503.

SWL: Leroy Waite, 39 Hannum, Ballston Spa NY 12020.

Canada: ARRL Central QSL Bureau, PO Box 663, Halifax, NS, Canada B3J 2T3.

Remember, stateside stations may send their QSL cards via the bureaus outside the U.S. plus Hawaii and Alaska, but do not send cards via the bureaus located in the U.S. They are for DX cards only.

BITS AND PIECES

In the book on the Clipperton Island DXpedition, Oliver Cado F6ARC has this to say concerning 80 meter operation: "Although the traffic with America on this band was without incident, the same cannot be said for Europe. There was too much impatience and lack of discipline." Jacky Billaud F6BBJ had this to say on the same subject: "... our expedition was European, so we wished to make as many contacts as possible rather than make the easier contacts with North America... We were lucky indeed... But here again, indiscipline with European stations was a nuisance and our frequency was overloaded with words that should never be heard on amateur wave bands..." Now, contrast those statements made by two who were there and have first-hand knowledge of American operating habits with Minute 56 from a recent ARRL Board Meeting: "56). On motion of Mr. Zak, seconded by Mr. Eaton, after discussion, *unanimously* VOTED that the board express its continuing concern over harshful operating tactics and procedures and improper language being heard with disturbing frequency on amateur bands, particularly during rare DXpeditions, and directs the General Manager to undertake suitable educational programs through channels available to the League so that the International image of Amateur Radio is not tarnished and so our stature at international Radio Conferences will be enhanced."

It has been reported that one high official of the ARRL was so upset over the activities during the Clipperton effort that he wanted to cancel all DXCC credit for the operation. Sure, during the heat of battle, especially with an operation like Clipperton or Iraq, things sometimes tend to get out of hand and tempers come to the boiling point. But the American DXer should not be held solely accountable for the actions of a very small minority. Tempers flare on traffic nets and two meter repeaters as well. It is just unfortunate that when one DXer makes an ass of himself, the whole world can hear him. We would do well to keep that in mind...

The ARRL rejected a recommendation by the DX Advisory

Continued on page 217

Murphy's Masterpiece

—the lost weekend

Kenneth S. Widelitz WA6PPZ
10405 Louisiana #8
Los Angeles CA 90025

I'd run into Murphy before. Almost every ham has. In my past experiences with Murphy, he has always struck quickly with a single debilitating blow. Aggravating, maddening, depressing, but always challenging, Murphy had always wreaked his havoc on me and moved right on to others. But for one long weekend in July, 1976, Murphy worked his masterpiece, temporarily destroying my spirit as well as a long-planned Bicentennial QSO Party camping trip to Nevada. It is only now, many months later, that I can finally bring myself to relate this saga of seemingly eternal torment.

Can it be that I hear the voice of an uninitiated asking "Who is Murphy?" Murphy (he has many first names, most of which are unprintable) is the ephemeral executor of Murphy's Law. Murphy's Law takes many forms and it has numerous corollaries. The basic law is "Anything that can go wrong will."

Murphy, as executor of that law, is the culprit that does the dirty work. I can't tell you what he looks like, because I've never seen him in action. No one has. But he always leaves evidence of his visits.

This is a long story and a little background information is necessary. In May, 1976, I moved out of a large apartment complex and into a considerably smaller 10-unit building. The landlady was taken by the XYL and virtually "adopted" her as a granddaughter on first sight. In fact, after she showed us the available apartment, she kissed the XYL goodbye and said, "I hope you take the place." I saw the opportunity to take advantage of their relationship and get permission to put up an antenna on the roof so I could get back on the low bands. When I moved into the large apartment complex, I had traded my low-band gear in on a two meter unit, but I didn't enjoy two meters. I yearned to get back on CW and into some contests. Although she was at first hesitant, after showing her pictures of the proposed antenna, I got a positive response from my new landlady and proceeded to examine the transceiver market.

I decided on a Kenwood TS-520 because it had built-in ac and dc power supplies. It would be the perfect rig to take along on a camping trip and set up in some rare county for a contest. Contest, did I say? That light bulb that hovers above my head like a halo flashed on — bells rang! The Bicentennial QSO Party was scheduled for July. Even allowing a few weeks for delivery, it appeared that there would be enough time to take advantage of the rig's portable capabilities immediately.

My mind set to work. Where would be the best place to operate from in the Bicentennial Contest? What state does every DX station need to complete its "Worked All States"? Why, that state just across the border — Nevada. "That's it," I shouted. "Nevada!"

"What?" The XYL turned and queried in consternation, "What's Nevada?"

"Margot (the XYL's name is Margot), we're going to take a camping trip to the highest point accessible by car in Nevada," I said. We had been on numerous camping trips before and had all the required gear. The XYL, while enjoying the comforts of home, often had proved to be a surprisingly good camper. I must admit that when we camp, we don't exactly rough it. We always find a campground with toilets, preferably with hot water and showers. We always sleep in a tent. And none of that prefab food. We always bring a full ice chest containing thick steaks, chicken breasts, etc.

I had never involved the XYL in one of my amateur radio projects before. She had always made other plans on "contest weekends." However, I told her I needed some help on this one and she agreed to go along.

I explained to her about how the new rig should be in just in time for the *big* contest, the Bicentennial Contest, at that. There would only be *one* Bicentennial Contest, and I wasn't going to miss it. In fact, I was going to be on top of it all, the highest point in Nevada, the most-wanted state. The XYL shrugged her shoulders and simply said, "That's nice."

I ordered the rig from a mail-order house in the Midwest in mid-June. Then I turned my attention to the antenna problem. Looking through the want ads in the back of *QST*, I found a Joystick™ for sale very cheap. A Joystick antenna is a copper pole about 7 feet long and ½ inch in diameter. It "folds down" to 2 3-foot lengths, perfect for travel. It comes with a Joymatch™, a

tuning device, and will load up on 80 through 10 meters. The Joystick would be perfect for a field trip. I could operate every band and not have to worry about having to find trees to string up a longwire.

From the Automobile Club's literature, I found the highest campground in Nevada. Lee's Canyon, at 8300 feet, sounded pretty good. The site was picked.

As July approached, I began to wonder if I would be able to make the trip. Despite frequent calls to the mail-order house, the rig had not arrived. The Bicentennial Contest weekend was rapidly approaching. Then, on the Wednesday before the Friday we were planning to leave, the rig arrived. I opened the carton, hooked the rig up to the Joystick and made a quick contact just so I knew that it worked.

I then set about the task of modifying the dc power cable connector so I could run the rig out of the tent but off the car's battery. I had explored the possibility of renting a generator, but dismissed it as being too expensive, too bulky, and a potential target for Murphy. I had forgotten about voltage drops and those kinds of considerations, and was shocked when the guy behind the counter at Henry Radio told me I would need #8 wire and that it would run around $15 for the cable alone. It was quite a job securely soldering #8 cable to a very small pin on the power connector. It was considerably easier hooking the other end of the cable to some large-sized battery clips stolen from a jumper cable.

Putting together the cable and loading the car with the camping equipment took me right up to 11:30 pm Friday evening, our time of departure. My plan was to drive all night, arriving at the campground at dawn's early light. That would give me first choice at a prime site and allow time for a few hours' sleep in addition to setting up the rig and tent.

After checking a second time that I had everything and that it was securely packed, I hopped in the "Beady Eye." The "Beady Eye" is the XYL's solid, dependable and reliable 1970 grey Monte Carlo with a peeling black vinyl roof. The "Beady Eye" derives its name from its license plate, "976 BDI." The "Beady Eye" had taken us 8500 miles on a cross-country camping trip the summer before. While a rock had been kicked up and had cracked the windshield, and despite driving for one 36-hour stretch, the "Beady Eye" performed magnificently.

This night, however, when I switched on the ignition, a strange thing happened. The radio and the windshield wipers wouldn't work. It seemed to me it was pretty obvious what was the matter. A fuse had blown. It took us a few minutes to find a gas station that was open. I pulled in, found an attendant, stopped the car, and told him the problem. He suggested I pull the car nearer the station where the light was better so he could take a look. I started the car and all of a sudden the radio came on. I turned the windshield wiper switch and they started swishing across the windshield. "Well, that's Murphy's Law," I casually remarked to the gas station attendant. He shrugged his shoulders and we headed out on the freeway, barely 20 minutes behind schedule.

Lee's Canyon is located about 40 miles north and 20 miles west of Las Vegas. We rolled into Vegas at about 5:00 in the morning. There wasn't even the hint of sunrise on the horizon so we decided to gamble a little, grab some breakfast, and then be off.

The XYL and myself aren't what you would exactly call big gamblers. We each sat down at the blackjack table with $20. Five minutes later we each got up with $0. We had never both lost 10 straight hands before. Nevertheless, I wasn't exactly shocked.

We had some breakfast and got on the road again, heading north out of Vegas. We reached the Lee's Canyon cutoff just as the sun came over the mountains. About 10 minutes after making the turn, I smelled some gasoline. I had bought two 5-gallon gas containers because I knew I would have to run the car while running the rig off the car battery so as not to let it completely discharge. I figured that the extra 10 gallons, plus having filled up in Vegas, would easily cover idling the car for an hour or so every other hour during the contest.

When I smelled the gas, my first thought was that the top on one of the containers was not as secure as it should be. I pulled over to the side of the road, opened the trunk, and found that, sure enough, just a little gas had spilled. Not even enough to damage any of the camping gear. I repacked the gas containers to make sure that a further leak would do minimal damage and started to get back into the car. As I was slipping behind the wheel, I heard a loud sound, not at all unlike a balloon popping. That sound was immediately followed by a strong, consistent hiss. Steam started pouring out from under the hood. Margot and I quickly jumped out of the car and opened the hood, only to see the steam whistling out a dime-sized hole in the radiator hose.

To say that we were in the middle of nowhere would be entirely accurate. We looked at each other forlornly. "Oh, no! We're in the middle of nowhere. What are we going to do?" moaned Margot. I was pretty upset myself, to tell you the truth. We hadn't seen a car since we made the turn on the cutoff, some 10 miles back. Then that light bulb went off again.

"Here I come to save the day," I sang in Mighty-Mouse fashion. "I'm an amateur radio operator, Margot. I'll just fire up the rig and call for help. No problem!"

"My hero," crooned Margot as she held her hands to her fluttering heart.

I pulled the card table out of the trunk and started setting up my station by the side of the road in the middle of the desert. Fifteen minutes later I was ready. I plugged the coaxial connector into the back of the rig, stuck the battery clips on the car battery, and flipped the big switch. The rig was getting power, but all I heard was the receiver's hiss. It was like I had no antenna. I started to unscrew the coaxial connector. Just as I got the shield off, all of a sudden the rig came to life. I felt about two inches tall. In my haste in preparing the connector, I had done a poor soldering job. In being rolled up, the foot-long coaxial connector between the rig and the Joymatch had shorted. I wasn't going to be able to save the day. Beyond that, even when help came, how was I ever going to get on the air? I didn't have a soldering iron in the tool chest, let alone ac to use it. I was more concerned with that problem than with "being rescued" from the middle of nowhere.

After realizing that amateur radio was not going to help, I took a closer look at the hole in the radiator hose. Fortunately, it was only about 3 inches from the end of the hose. I pulled out a knife and cut the hose off just to the side of the hole. With a little bit of stretching, the remaining hose was just long enough. Now the only problem was that there was no water in the radiator. About that time, the first car that we had seen in an hour rolled by. It was a fellow in a pickup truck heading to work on a construction project in Lee's Canyon. He had some water in the truck. He also told me that there was a youth camp with an adequate

workbench up the road. He thought they had a soldering iron there. That was good news, indeed.

Just before the youth camp was a ranger station where I filled up the radiator and rechecked the success of my hose operation. Then we went looking for the youth camp. The fellow in charge of the youth camp was friendly and immediately agreed to allow me to use the workshop so I could fix the shorted cable. Five minutes later, that was done. Our attention then turned to finding the best location. At the youth camp we found out that Lee's Canyon is a ski area and that the ski lift operated during the day. That made me very happy. I imagined myself operating from the top of the mountain by stealing power from the ski lift. The XYL was less optimistic. "I'm not going to camp up there if they don't have bathrooms," she flatly stated.

By this time, it was about 9:00 in the morning. The ski lift was supposed to start operating at 10:00. We decided we would drive to the base of the ski lift and ask the operator, when he arrived, if there were bathroom facilities at the top of the lift. On the way up to the ski lift, the car overheated again. I opened the hood and found that I had forgotten to put the radiator cap back on, so it was back down to the ranger station for more water, and then back up to the ski lift.

Margot wasn't exactly disappointed when the ski lift operator told us there were no bathrooms at the top. She really didn't want to spend the night at the top of the mountain.

We headed into the campground and found a good location. As soon as the tent was erected, I was up in the trees. No sooner was I up in the trees than I was the center of attention of a dozen very young, very wondering eyes. I somehow got the feeling they were waiting for me to fall. Margot's constant exhortations of "be careful" kindled the little group's excitement. It had been many years since I had climbed trees to put up antennas. Although somewhat scraped and cut up, I got the Joystick hung over one of the top limbs of a pretty good-sized tree. I finally got the station set up and then it was time to make a quick test QSO, and catch some sleep.

With many little kids crowded into the tent, I began to tune up. It was immediately obvious that I had problems. This time it appeared to be a short in the cable between the keyer and the rig. In coiling the cable for the trip, it, too, had shorted. So now it was back to the youth camp and another repair job. By the time I finished, it was the middle of the afternoon and I began to realize that there wasn't going to be much of a chance for a nap. I decided I'd just get in a quick QSO to check the installation, and then try to relax a little bit.

Tuning up was not exactly a breeze. I had only tuned the rig up once before. Now I was tuning up using the dc supply for the first time and with a different antenna. Needless to say, now, many months later, I can virtually tune up the rig blindfolded. That was not the case with the then new rig. Tuning that thing up under those conditions (with six little kids hanging all over me and asking all kinds of questions) started to get my dander up. The 349 signal report I got from Iowa didn't cheer me up at all. In fact, I was getting pretty depressed. After that report, I finally realized that I was, in fact, *in* the canyon portion of Lee's Canyon. Walls a thousand feet high surrounded me on three sides. I may have been at 8300 feet, but the summit of the ski area was 9300.

By this time, it was getting to be 4:00 in the afternoon. The contest was scheduled to start at 5:00 local time. I hadn't had a chance to sleep and I hadn't eaten since Vegas. So I started a charcoal fire while the XYL seasoned the steak. I had a chance to relax for the first time during the day.

Just as the smell of the barbequing 2-inch thick sirloin steak began to remind me how long it had been since I had eaten, the skies opened and it began to rain. No, it was doing more than raining, it was pouring, teeming, etc. The charcoal fire went out within 5 minutes.

The contest began. The tent started leaking. An hour went by and I had managed only six contacts. On the drive up, I was sure I would get 1776 QSOs operating in Nevada. I was tired, hungry, and totally disgusted. The XYL pulled a bottle of wine out of the ice chest and the contest was over. We decided we'd leave the first thing in the morning and spent the evening commiserating over my bad luck.

It stopped raining some time during the night and we quickly broke camp at dawn. I was out of the contest. The weekend was totally ruined. Little did I know that Murphy was not finished with me yet.

After two minutes on the road, the temperature light lit up bright red. It was like that for the entire next hour back to Vegas. The XYL was virtually panic-stricken. Even the "Beady Eye" breathed a sigh of relief when we pulled into a gas station in Vegas. It just so happened that the gas station was across the street from the Holiday Casino, one of the "more casual" places on the Strip.

The mechanic told us that the overheating on the way back had been caused by a problem with the fan. He said it would take a little over an hour to fix. Margot had had enough blackjack at breakfast the previous morning, but I hadn't. I sat down at a table and, after a few hands, settled into one of the greatest streaks that I've ever had in Vegas. As I said, I'm no big gambler. My betting strategy at blackjack is to leave up half of my winnings until I lose, then I go back to my base bet of $2.00. You figure you have to lose your biggest bet.

As I said, things went quite well at the tables. I pulled 8s to my 13s and tens when I split aces. I guess I had about $200 on the line when I finally lost. In any event, I figured I had won about $300 which certainly would cover the cost of the trip, including the car repairs.

I really don't know much about radio, but what I know about radio is considerably more than I know about cars. I won't begin to describe what the mechanic told me was wrong because I really didn't understand then and don't remember now. The bottom line was that the bill came to $175. Easy come, easy go.

At least we were back on the road. That was short-lived. We pulled into a gas station in Barstow, the midway point between Vegas and Los Angeles, for gas. When the attendant opened the radiator to check the water, he found there was nothing there. Evidently, the problem with the fan had not caused the overheating. Rather, it was a hole in the water pump. It looked for a while like we would be stuck in Barstow for the day, but somehow the mechanic there came up with a temporary solution. At least it was good enough to get the "Beady Eye" hobbling home.

Well, that was Murphy's Masterpiece. He struck often that weekend, and in every vulnerable spot. No, you say. You *did* win some money in Vegas. Yes, I say. But the total of my automobile repair bills from Vegas, Barstow, and back home just coincidentally equalled the entire amount that I had won. Coincidence? No, just Murphy's way of letting me know that my winning at blackjack was not a victory over Murphy. ■

Dave Waterman W7FGD
PO Box 179
Kelso WA 98626

How About Some Ham Shack Safety?

—don't be a statistic

I am a professional fire-fighter. I have seen the death and destruction that a fire can bring. I've seen dead bodies and the charred ruins of homes.

In your wildest imagination, can you conceive of a man breaking into your home and taking every single possession that you own? Probably not. But a fire can. Can you imagine a person coming into your home and murdering every member of your family, including the family pets? Again, probably not. But a fire can. It happens all the time.

My purpose in writing this article is to point out some dangerous practices and recommend some things that you can do to protect yourself, your family, and your ham shack.

I have been a ham for over twenty years, and in that time, I have done some crazy things. Things that I shouldn't have or wouldn't have done if I had just stopped to think. We all do dumb things sometimes. Sometimes in our anxiety to finish a linear or string up an antenna, we don't stop to consider the dangers that are lurking there. It's such a bother to have to turn off the power while you reach into the high-voltage compartment to get that screwdriver that you dropped there. It's so easy to just throw that dipole antenna up and over the top of your power lines coming into your home. Sometimes these things are so very easy to do; we just don't think about the possible consequences.

Fire—Who, Me?

On the average, there are $11 billion in wasted resources, 300,000 people injured, and 12,000 lives lost each year to fire.[1] A large part of this is caused by carelessness, especially the smoker's carelessness.

But that's alright, because it will never happen to you—right? We all see pictures in the paper of bad fires and we read the stories about them, but it's all so impersonal and far away. Right?

I can well imagine that the 12,000 people who died last year felt exactly the same way. It would never happen to them. The same goes for the 12,000 who will perish this year. And the year after. It can happen to you.

As I said, the smoker's carelessness is a big cause of fires. So is defective heating and electrical devices. Firefighters constantly find pennies in fuse boxes and 30 Ampere fuses where 15 Ampere fuses belong. We find trash and flammable liquids stored near furnaces, overloaded electrical circuits, gas water heaters improperly vented, and clothing placed against baseboard or wall heaters. All these can and do start fires.

Hmmmm . . . how does that power cord on your ten-year-old VTVM look? Frayed cords can easily start fires. They start the kind of fires that sit and smolder in a rug or along the back of furniture. As they smolder they produce carbon monoxide and other toxic gases. These gases are the real killers in fires. Most people die in fires from these poison gases, without ever seeing the flames. They are dead long before the flames ever get to them, totally unaware of their presence. Well, if this is the case, what is there to do?

Fire Protection

Cheer up! There is one definite and positive thing you can do for your home or ham shack to protect you from the danger of these poison gases, smoke, and fire in general. Purchase a smoke detector.

A smoke detector is the cheapest and best insurance against fire that you can buy. It's a silent sentinel, on duty 24 hours a day, guarding you and your family from the ravages of fire. Detectors are now available almost everywhere. They can be obtained wired for 110-volt house power, as is usually used in new home construction, or battery-operated for existing buildings. There are several different types and over 50 different brands, but you can't go wrong as long as you get one that is capable of detecting gases and smoke.

Just what does this device do? It gives a loud warning the first instant it detects a sign of ionized particles, by-products of combustion, or heat and smoke. It gives you an early warning that you have a fire. It gives you time to get out of your home. It's worth every penny it costs and I personally know several families who owe their lives to a smoke detector.

The value of the device is obvious. The cost is minimal. I would urge you to get one and install it on the ceiling or high on the wall of the hallway that leads to your bedroom. Or just outside the bedroom itself. With this type of protection, you can rest assured that if a fire should break out in your home, you will have the earliest warning that is possible.

What To Do in a Burning Building

There are three general rules to follow if you find yourself in a burning building. The first is get *out!* If you see, smell, or hear any hint of fire, evacuate your family immediately, but don't attempt a rescue through a wall of flames or thick smoke. Call the fire department as soon as possible. Don't attempt to extinguish a fire unless it is confined to a small area and your extinguishing equipment is equal to the task.

Secondly, before opening a door when you suspect fire in another part of a building, feel the inside of the door with the palm of your hand. If it's hot, don't open it. Summon aid, if possible, and go to a window and await rescue. If smoke is pouring into the room under the door, stuff bedding or clothing into the crack.

Lastly, if you *must* go through smoke, keep low. Gases, smoke, and air heated by the fire rise, and the safest area is at the floor. Cover your mouth and nose with a damp cloth if possible. Don't assume that clean air in a fire situation is safe to breathe. It could contain carbon monoxide, which, before it kills you, affects your judgment, hampering your escape.

Also, if your clothing should ignite, roll over and over on the ground or floor. Running will just fan the flames. Teach this proper procedure to your family.[2]

The Awesome Power of the Lowly Electron

One of the first things that the military teach their electronic repairmen is to remove all rings and wristwatches when they work on equipment. Boy, is that ever a good idea. It only takes one time to experience the thrill of having your hand become a better path to ground than the ones designed into the radio before you begin to appreciate such procedures. And that can be lethal. Every now and then I hear of a ham or a CBer who has electrocuted himself while working on equipment; it's very, very sad. And needless. Please don't let that happen to you.

I'll never forget the time we were called out on a rainy cold winter night because a 110,000-volt feeder line to our city had broken. As we approached the scene, the entire area was lit with a weird and eerie light. The feeder had broken in the middle, and the hot end was dancing a deadly dance of sheer power. Pink and white sparks were thrown everywhere as the wire writhed like a snake in its death throes. The main circuit breakers had failed to open and for twenty minutes we watched the unearthly scene until the power company finally arrived to cut the power. The next day I returned to the area and found holes, two and three feet in diameter and equally deep, burnt into the ground. The power that electricity has is awesome.

This power was brought home to me in a very personal way the day I melted my 75 meter dipole on the power lines feeding my home. I was aware of the danger of the lines, but I had taken precautions and had engineered my dipole so that I could raise it, carefully, over the top of the power feedline. (In retrospect, I can say don't ever do this!) All was going well until a support rope slipped out of my fingers and the whole thing came down on top of the power lines. There was a loud pop, a torrent of sparks, and suddenly the wire had been melted in two. A close examination of the number twelve copperweld showed that the ends of the wire had truly melted. The ends were beaded into little balls. Copper melts at around 2,000° F.

The majority of house drops in the country are three-wire drops. If you look at them closely, you will see that they consist of two insulated wires (the hot ones) and a multistrand

cable (ground). However, that ground is not an earth ground! Induction can generate much current in that bare cable. Whenever you are doing antenna work, please pay attention to your power lines and be aware of the potential that is there. Don't ever connect an antenna to a power pole, and don't run antennas over the top of power lines. Watch out for tower guys, too. Don't leave an antenna connected to equipment while you are working on it.

While we are on the subject of antennas, let me tell you about another dangerous thing I did once. I had always wanted a good DX antenna to get into South America on 40 meters (I still do). One day I designed a three-element inverted vee wire beam which was to be strung over the apex of the roof. (This was before I ever became a firefighter, but still is no excuse.) I constructed it and placed it in service. Not only did the copper wires lay along the roof, but the ends extended down to the ground where any child, dog, etc., could accidentally come into contact with them. This was an extremely dangerous and foolish thing to do. No amount of DX is worth that kind of risk. I came to my senses and removed it the next day. I never calculated where the voltage and current peaks were, but I know that if I hadn't set the house on fire, I would surely have given someone a bad rf burn. Even wires extending through limbs of trees can be a fire danger in dry weather (besides skyrocketing your swr).

Please take care with open wire feeders, too. Use lots of standoff insulators and check the feedline periodically to make sure it hasn't sagged against the side of the house.

In the ham shack, common sense should prevail. It always seems that the quick little time-saving things that you do are the things that can lead to trouble. Like the time I adjusted the neutralizing capacitor of my 500-Watt rig without removing the case. I simply reached my screwdriver through the high-voltage housing to the capacitor. I didn't want to take the time to remove the case. And I learned the hard way. The screwdriver touched the side of the high-voltage cage (even though I was trying to be careful) and B+ went to ground. That lesson only cost me a fuse. I was lucky!

There are some things that really help as far as safety goes around the ham shack. Three-prong plugs (with a chassis ground) are great. A rubber mat on the floor of your work area helps to insure that you aren't going to end up a giant path to ground, from your fingers to your toes. A master power switch, one that will kill all power in the ham shack, and one that all members of the family are aware of, is a good thing to have. And a fire extinguisher isn't a bad idea, either. Let's quickly talk about fire extinguishers.

Fire Extinguishers For the Home

Fires are classified in four different categories—A, B, C, and D. Class A fires are fires in ordinary combustibles; wood, paper, and electrical wire insulation also falls into this category. Class B fires are in flammable liquids, gases, and grease. Class C fires are in energized electrical equipment. And Class D fires are those that involve combustible metals—magnesium, sodium, potassium, and zirconium.

Fire extinguishers are rated with a number and a letter designation which indicates which types of fires they are effective for. The letter indicates which type or class of fire, and the number indicates the relative effectiveness.[3] If you are shopping for an extinguisher, a 2½-lb. dry chemical with a tri-class rating (A, B, and C) is a good choice for a ham shack, your kitchen, or your car.

A tri-class extinguisher such as this would be effective in putting out fires in all three of its classes.

One thing to be aware of is that even though a Class C fire is electrical in nature, it is essentially a Class A fire involving energized electrical wiring; once the power is turned off, you have a Class A fire entirely. Please don't ever put water on an electrical fire while there is still power hooked up, lest you go to meet the Creator far in advance of His having planned for your arrival.

The Shocking Power of Lightning

Having been born in the midwest, I can well appreciate the thunder and lightning storms that abound in that region. We only get maybe one good lightning storm a year out here on the west coast. But that doesn't mean you shouldn't be prepared for it when it comes.

Two years ago, a brand new house was almost destroyed during a lightning storm in our area. Lightning struck the power lines coming into the home and every electric power-consuming device inside was destroyed—all appliances, radios, clocks—everything was damaged. The house wiring was completely gone and a portion of the house itself had to be rebuilt. Lightning is nothing to fool with.

You should be able to disconnect and ground all antennas quickly. And by grounding I don't mean some dinky little wire. You should have the biggest ground strap that you can find. And it should run, in the shortest length possible, to the best cold water or ground connection that you can manage. When that storm comes, quickly turn everything off, disconnect and ground all antennas, pull all the plugs, and join the family (they will probably want you around).

In Summary

I have confessed to you some very stupid things that I have done. Laugh at them, as I do myself (with a shudder), but please remember them. Remember also the rules for getting out of a burning building:

- Don't go through thick flames or smoke.
- Feel all doors, and if hot, don't open them.
- If you *must* go through smoke, keep low.

Remember, too, that a smoke detector is the best insurance for the lives of you and your family that you can buy. They are saving lives and property all over the nation.

With the use of common sense, a high esteem for the destructive power of electricity in all forms, and a wary eye on housekeeping and electronic service practices, you will, I trust, live a long and full life. I hope never to have to see you in a professional capacity. Good luck and safe hamming! ■

References

1. *America Burning*, The Report of the National Commission on Fire Prevention and Control, p. 111.
2. *America Burning*, "Fire Dos and Don'ts," p. 115.
3. National Fire Codes, Vol. #8, "Portable & Manual Fire Control Equipment," p. 10-6.

Head 'Em Off at the (High) Pass

—improved filter design

Paul Zander WB6GNM
86 Pine Lane
Los Altos CA 94022

A while ago, I had some TVI (television interference) due to front-end overload on the TV set. It should have been a simple matter to connect a high-pass filter to the TV, but things did not work out that way.

First, I went to the local radio parts store to buy a filter. The increased activity of CB had increased the demand for filters beyond the dealer's ability to keep them in stock and they were not available. The next shipment was not expected for three weeks. I didn't want to wait that long.

When I got home, I opened my copy of *The Radio Amateur's Handbook* to the section of high-pass filters. I whipped-up a filter following the circuit I found, and put it on the TV. The interference was substantially reduced, but not eliminated.

I reasoned that if a simple filter was good, a more complicated filter should be better. I added more sections to the filter, but the interference remained the same. I tried various formulas for calculating the coil and capacitor values and built several more filters. They all worked the same. I then spent a lot of time looking elsewhere for the cause of the TVI. Finally, I removed the filters from the TV and took them into Hewlett-Packard, where I work, and measured the filter characteristics. I found the cause for the difficulty and designed an improved filter.

The key to this problem is that there are two modes in which signals can travel down the feedline of a TV set. One of these is the

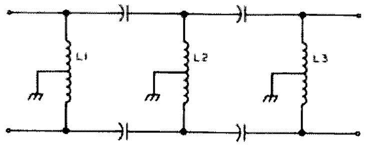

Fig. 1. Handbook *high-pass filter schematic.*

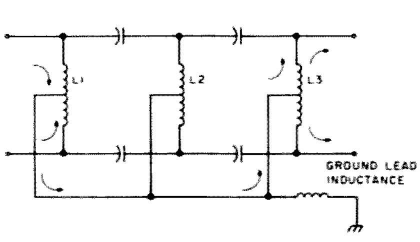

Fig. 2. Handbook *high-pass filter schematic with non-ideal ground connection.*

A

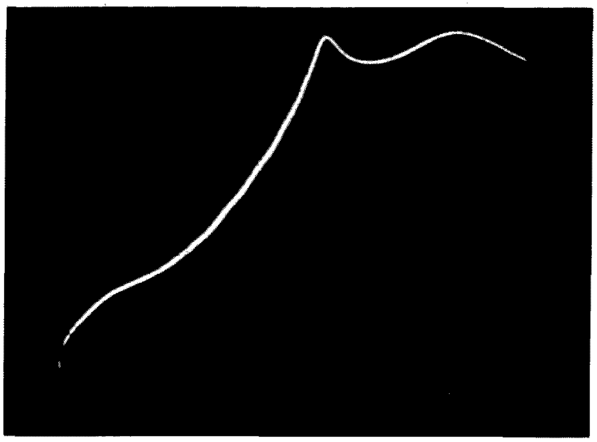

B

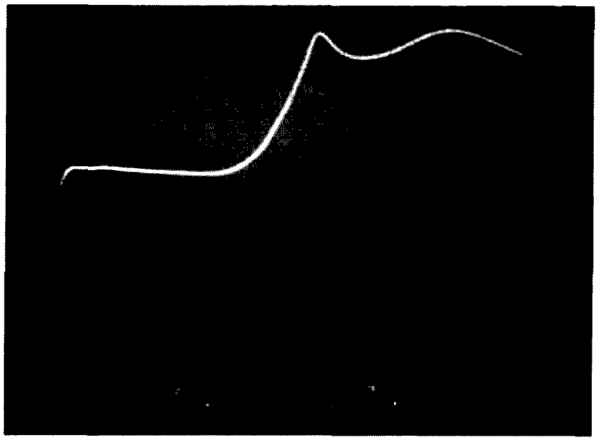

Fig. 3. Unbalanced-mode response of filter in Fig. 1. Measured with Hewlett-Packard 8553 Spectrum Analyzer and 8443 Tracking Generator. (a) Good ground; 1-inch ground lead. (b) 4-inch ground lead. (c) No ground. Vertical axis: 10 dB/division. Horizontal axis: frequency (0-100 MHz).

C

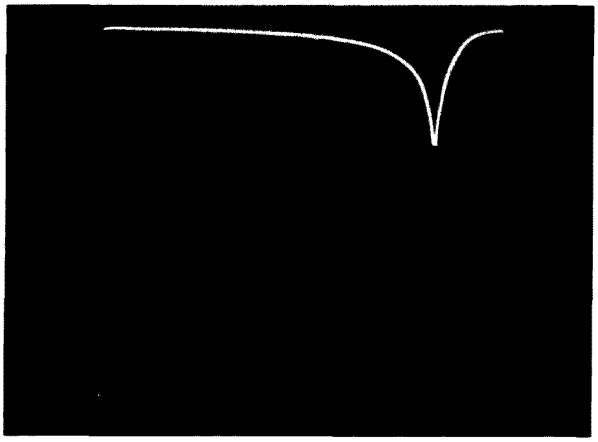

balanced mode, and the other is the unbalanced mode. Each mode reacts differently with the high-pass filter.

In the balanced mode, the currents on each side of the feedline are of equal magnitude and opposite phase. At any instant in time, a current traveling down one side of the feedline is *matched* by a current traveling up the other side of the feedline. The filter in Fig. 1 consists of capacitors in series with each side of the feedline (which impede low frequency signals), and inductors between the two sides (which tend to short out low frequency signals). At the TV frequencies, the capacitors have low reactance, and the inductors have high reactance. The TV signals can pass through the filter with little or no loss. If the signals are truly balanced, *and* the filter construction is perfectly symmetrical, the grounded center taps of the coils will have no effect.

On the other hand, in the unbalanced mode, the currents on each side of the feedline are in phase, so that a current traveling down one side of the feedline is matched by an equal current traveling down the other side. The inductors between the two sides of the feedline have no filtering action because the same signal is already on both sides of the line. The filtering action is now dependent on the grounded center-taps of the inductors to short out low frequency signals. The reason that the unbalanced signals are of importance is that signals from the amateur transmitter tend to be picked up by the TV feedline in the unbalanced mode.

Now, how can a filter be connected to the TV set? Recent-model TV sets are much more compact than their predecessors. There is little or no extra room to put a filter inside. Furthermore, the tuner input terminals are usually the antenna terminals on the back of these sets. The only practical thing to do is to put the filter outside.

A ground connection to this filter might be made by attaching a wire from the filter to a mounting screw on the back of the TV. In this situation, the schematic in Fig. 2 is more accurate than Fig. 1. The center-taps of the coils, L1, L2, and L3, are connected together at the filter. This connection between the coils is then connected to the TV chassis ground through the inductance of the wire ground lead. If this ground lead is of any length, its inductance will be important when compared with the coils in the filter. If the ground lead inductance is too high, signals will flow through L1 to its center-tap, then to the center-tap of L3, and finally out of the filter. This is demonstrated by the three unbalanced-mode attenuation curves in Fig. 3. In Fig. 3(a), the filter has a solid ground connection and low frequency signals are attenuated up to 70 dB. In Fig. 3(b), the ground lead is only 1 inch long, and the filter provides only 30 dB attenuated up to 70 dB. In Fig. 3(c), there is no ground connection to the filter, and the filter is totally useless for unbalanced sig-

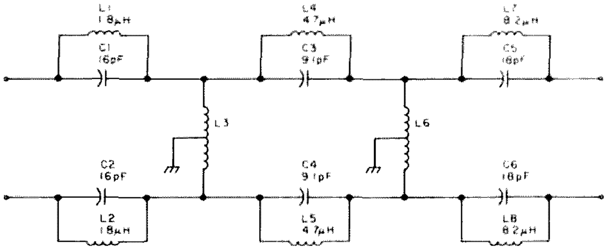

Fig. 4. Improved high-pass filter. L3 and L6 consist of 12 turns of number 24 close-spaced on a ¼-inch diameter plastic rod.

nals. With a less than perfect ground, it makes little difference how many sections are in the filter; the signal can still sneak from the center-tap of the input coil to the center-tap of the output coil and bypass everything in the middle.

Since getting a better ground connection in the real world is not always easy, I have designed a filter that is less sensitive to the filter ground connection. My filter is shown in Fig. 4. Here, L1-C1 and L2-C2 form trap circuits tuned to 10 meters. Similarly L4-C3 and L5-C4 are tuned to 15 meters and L7-C5 and L8-C6 are tuned to 20 meters. Signals that might be able to sneak from the center-tap of L3 to the center-tap of L6 will still have to go through the high impedance of the resonant traps at the input or output of the filter. The proof of this is shown in Fig. 5. With a good ground connection, this new filter performs somewhat better than the design in Fig. 1. With a 1-inch ground lead, the response is almost identical to the response with a good ground, Fig. 5(a). If the ground lead is lengthened to 4 inches, Fig. 5(b), the filter is still useful against 20- and 10-meter transmissions. As previously discussed, keep in mind that most of the desired TV signals are in the balanced mode and are not affected by the filter ground lead. Therefore, the 60-MHz notch in Fig. 5(b) will not adversely affect TV reception.

Although I used a computer to optimize the component values of my filter, the final design is quite tolerant to variations in parts values and location. I used commercially wound coils except for L3 and L6. The other coils could also be hand wound on any reasonable size coil form in your junk box. It's desirable to use a grid-dip meter to make sure that the traps are resonant somewhere near the right band. L3 and L6 should resonate with 18 pF near 50 MHz.

A word of caution is in order: Some TV sets have one side of the power line connected directly to the chassis. If your set falls in this category, connect a .001 uF capacitor of suitable voltage rating between the chassis and the filter ground lead. Be careful that nothing connected directly to the chassis is exposed to the touch.

After I had gone through all of this, a TV manufacturer sent a Drake TV-300-HP-F filter for one of my neighbors. Naturally, I had to see how it was built and how it worked. The schematic is shown in Fig. 6. The resistors shown apparently serve to prevent a static charge from building up on the TV antenna, and are not important to the normal operation of the filter. It is interesting to observe that their coils need to be intentionally deformed in the process of tuning the filter at the factory. When the case is directly grounded, the Drake filter gives 30 to 40 dB attenuation from 50 to 52 MHz, and up to 70 dB on the lower bands. Like the filter in Fig. 1, it is extremely sensitive to the length of the ground lead, and is useless against unbalanced-mode signals when it's not grounded. Ironically, the instructions supplied with the Drake filter discouraged grounding the filter to the TV chassis!

I hope my experience will help you cure your TVI problems. I would like to thank my wife for her time and effort in helping solve mine. ■

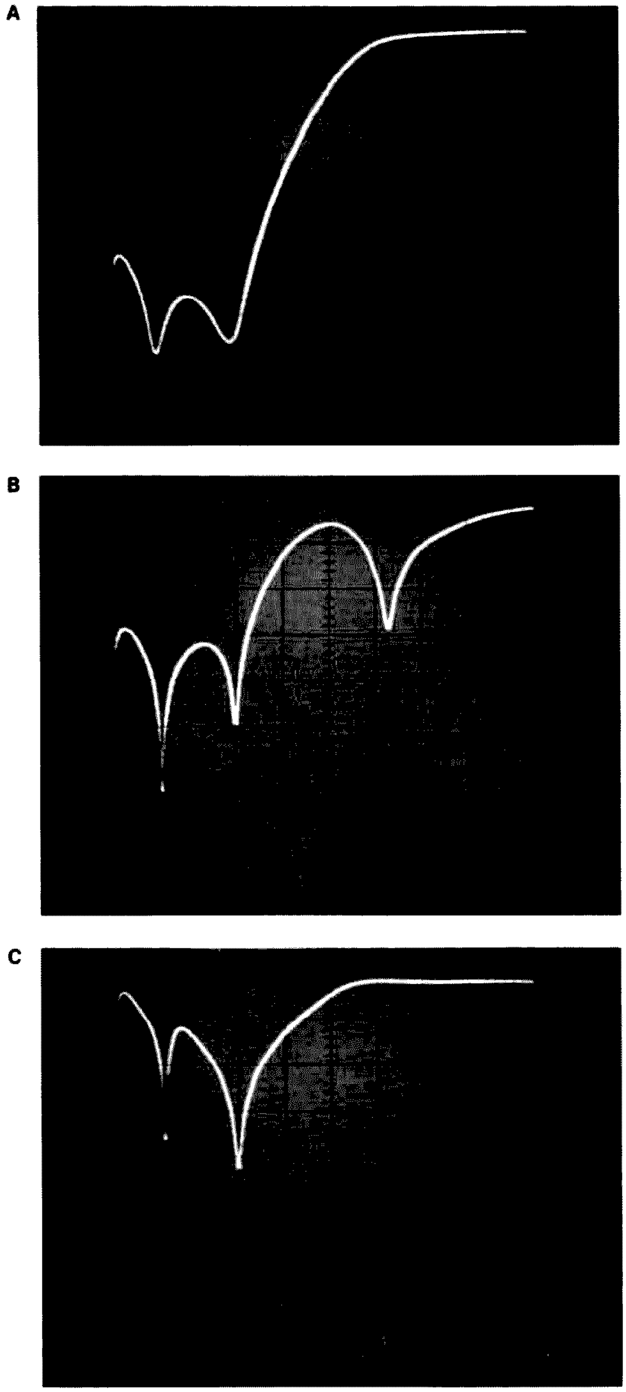

Fig. 5. Unbalanced-mode response of filter in Fig. 4. Same test setup as Fig. 3. (a) Good ground. (b) 1-inch ground lead. (c) No ground.

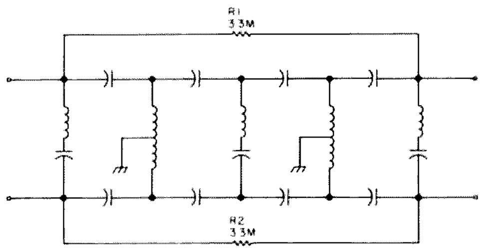

Fig. 6. Drake TV-300-HP-F high-pass filter.

555 Basics—And More!

—get to know this versatile IC

David Keeler WB4CEO
5204 Ferndale Avenue
Mobile AL 36618

There have been many articles recently in *73 Magazine* and other ham radio magazines, as well as other electronics-related literature, about integrated circuits. It seems to me that one of the cheapest and most useful ICs has not received nearly enough coverage. This device is suited for many applications as a general purpose timer. A few of these will be covered in this article.

The device to which I am referring is, of course, the 555 timer IC (it does have a big brother—the 556 dual timer, which is nothing more than two 555s in one package). The 555 usually sells for about 50¢ while the 556 sells for prices ranging from about 89¢ to over two dollars. Naturally, it is cheaper if you order them from some of the discount mail-order houses, rather than buy them at a local supply house.

In this article, we will take a look at some of the practical uses for the 555, plus the basics on how it works and how to apply this to some of your future construction projects. First, let's see how it works.

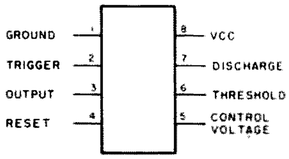

Fig. 1. 555 timer pin configuration.

The Basics

The 555 timer is an eight-pin DIP package IC (see Fig. 1). Pin 1 is always connected to ground and pin 8 goes to the Vcc. The 555 will accept any voltage from a low of 4.5 V dc to a high of 16 V dc. It works fine on 5 volts, even though this is close to the lower rating. It also works with no problems on a 6-, 9-, or 12-volt battery. And you can switch from one to the other as you wish because the timing period is independent of the supply voltage.

Pin 2 is the trigger pin. As the name implies, this pin is used to set (or trigger) the IC. Anything below ⅓ of the Vcc qualifies as a low and is read by the chip as a trigger pulse. When using the IC, it is a good idea to tie this pin to Vcc through a resistor of about 1500 Ohms. The IC can be triggered by anything from your finger to stray rf if this pin is left floating.

Pin 3 is the output. The name speaks for itself. It is normally low and goes high during the timing period. The output can be used to drive other ICs or a low-current relay.

Pin 4 is the reset pin. This pin should be tied to Vcc if it is not used, which it often isn't. Its main purpose is to reset the IC to its static state before the timing period is over.

Pin 5 is the control voltage. It can be used to alter the output. For our general timing purposes, however, it is a good idea to simply tie this pin to ground through a .01 uF capacitor. If you fail to do this, the timer may not function properly.

Pins 6 and 7 determine the length of the timing period when tied to external resistors and a capacitor. More will be explained about the specific uses of these pins in the sections following.

Monostable Operation

There are basically two ways to use the IC as a timer: either monostable or astable. First, we will look at its use as a monostable.

Fig. 2 shows the proper way to wire the IC when using it as a monostable. Again, we will take it pin by pin.

As always, pin 1 goes to ground and pin 8 goes to Vcc. Pin 5 goes to ground through a .01 uF capacitor (any approximate value will do). Pins 2 and 4 are held normally high by two 1.2k Ohm resistors. The two normally-open momentary-contact push-buttons provide a means for grounding when desired. An indicator lamp is connected between ground and pin 3. Pins 6 and 7 are tied together. They go to ground through a capacitor and through a resistor to Vcc. Now we are ready to go!

The IC is in its standby state. The output (pin 3) is low, so the lamp connected to it is off. Pins 2 and 4 have a high on them. Pin 7 (and pin 6, since the two are connected) is held low by a transistor inside the timer, thus keeping the capacitor discharged.

Now push-button 1 is depressed, grounding pin 2. As soon as the voltage on pin 2 goes below ⅓ Vcc, the IC sets a flip-flop inside it. This both removes the ground from pin 7 and drives the output high. The timing cycle has begun.

How long the cycle lasts, and thus how long the output stays high, is determined by the values of C1 and R1. Now that the short to ground is removed from pin 7, the capacitor begins charging through R1. It continues until it reaches ⅔ Vcc on the chip. When this point is reached on the threshold pin (pin 6), the flip-flop resets and drives the output low again. It also grounds the capacitor and we are right back where we started again. The IC is in the standby state and ready for another trigger pulse.

As I mentioned before, the timing period is independent of the supply voltage. This is due to the fact that the period is determined by how long it takes the capacitor to charge to ⅔ Vcc. The higher the voltage, the faster the capacitor charges, but the further it has to go to reach the ⅔ level. Conversely, the lower the voltage, the slower it charges, but it doesn't take as long to reach ⅔ Vcc. Simple, isn't it?

The reset pin serves an interesting purpose. After the IC has been triggered and the capacitor is charging, the flip-flop may be reset instantly to its standby state by applying a low to pin 4. This can be very useful if you want to stop in the middle of a timing period rather than wait for the IC to reset itself (especially if you are timing hours and not milliseconds).

Before you can use the 555 timer, you must know how to determine the length of the timing period. The formula for the monostable (Fig. 2) is as follows:

$$T = R1 \times C1 \times 1.1$$

where T is in seconds, R is in megohms, and C is in microfarads.

For example, if you use a 1 megohm resistor and a 2 microfarad capacitor, the timing period will be: 1 x 2 x 1.1 = 2.2 seconds. Remember, this formula is only good for monostable operation.

Now we have seen how the 555 operates in the monostable mode. Perhaps even more useful is the astable mode, which will be discussed next.

Astable Operation

Referring to Fig. 3, we see that there is another common way to make use of the 555. When wired as shown, it is set to operate in the astable mode. This is a free-running situation in which the IC automatically retriggers itself. This can be useful for supplying a series of pulses equally spaced, or for turning on something for a given period of time and then turning it back off for a different given period of time. Here, once again, is a pin-by-pin detail (Fig. 3).

Pins 1, 5, and 8 are connected in the usual manner. Pin 2 is tied to pin six (automatic retriggering) and pin 4 (reset) is tied directly to Vcc. The output goes wherever you want. In this example, it is tied to a lamp. Here is how the circuit works:

We start off with Vcc disconnected. As soon as we put power to the chip, the internal transistor grounds the capacitor as before in the monostable. But the trigger pin (pin 2) is tied to the top of the capacitor. So, as soon as the discharge pin (pin 7) goes low, the trigger senses it through R2 and sets the flip-flop. This removes the low from the capacitor and it begins to charge through both R1 and R2. It continues to charge until the voltage on the capacitor reaches ⅔ Vcc. Then the flip-flop is reset and the voltage on pin 7 goes low. However, the capacitor is not immediately discharged since there is a resistor between it and pin 7. The voltage slowly goes lower until it reaches ⅓ Vcc. As you remember, this is low enough to trigger the IC via pin 2, which also ties to the top of the capacitor. The IC is set again and the capacitor begins to charge. So, as you can see, the voltage on the capacitor goes back and forth between a high of ⅔ Vcc and a low of ⅓ Vcc (after the initial charge from zero).

As you might expect, there is a formula for computing the length of the timing cycles in astable mode, too. Here it is: Output high = 0.693 x (R1 + R2) x C. Output low = 0.693 x (R2) x C. Again, the

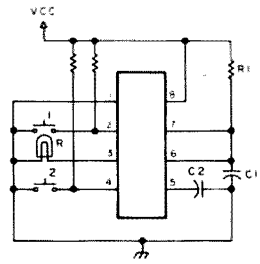

Fig. 2. Monostable operation.

output-high and -low times are in seconds, R is in megohms, and C is in microfarads.

As the formula points out, the capacitor must *charge* through both resistors while it only has to *discharge* through R2. For example, let's use the following values: R1 = 10 megohms, R2 = 4 megohms, and C = 2 microfarads.

The output-high time would be: 0.693 (10 + 4) 2 = 19.4 seconds, while the output-low time would be: 0.693 (4) 2 = 5.5 seconds. Again, the timing period is independent of supply voltage.

Audio Oscillator

Another excellent use for the 555 is as an audio oscillator. Although the 7400 TTL IC does this just as well for less than half the price (usually), it may be desirable to use the 555 instead in some cases. Remember, the 555 does not require five volts to operate as the 7400 does. Also, it is half the size.

Basically, the audio oscillator (Fig. 4) is nothing but operation in an

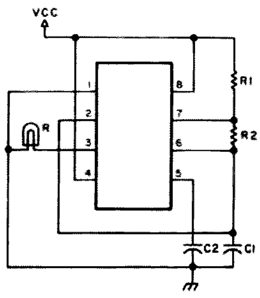

Fig. 3. Astable operation.

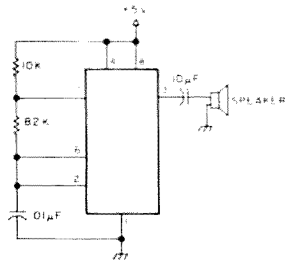

Fig. 4. 555 used as an audio oscillator.

astable mode with values that make the 555 turn on and off at an audio rate. Notice the values for frequency components R1, R2, and C1. Using the formula listed in the astable section, we see that the

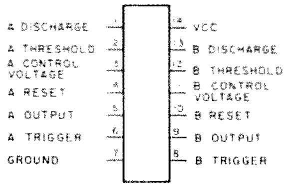

Fig. 5. 556 timer pin configuration.

output-high time is 0.693 x .092 x .01 = 0.0006 seconds, while the output-low time is: 0.693 x .082 x .01 = 0.0005 seconds. This gives us an audio rate of about 900 Hz. Since the high and low times are not exactly the same, some distortion will occur, but it is not bad. It's fine for a simple monitor, and you can always clean it up with a simple low-pass filter.

Notice that some differences exist between this and the other astable. The output goes to a speaker through a 10 uF capacitor. The output is nothing more than a series of highs and lows operating at an audio rate. It makes a fine little audio oscillator and it covers all audio frequencies with no problems. You can always change the frequency on this particular circuit by changing the 10k Ohm resistor for a pot of comparable value.

The 556

The 556 is nothing more than two 555s in a single fourteen-pin DIP package (Fig. 5). They are completely independent of each other as far as triggering, reset, output, and all other functions are concerned. The only things that they have in common are Vcc and ground.

Usually, the 556 costs much more than two 555s. This makes it cheaper to use the 555. But there are some advantages to the 556. Here are a few of the more important ones:

1. The 556 will take up less space on your circuit board and will require only one socket.

2. Since the power connections are common to both timers, you don't have to make separate power runs on your board. Also, both can be cut off by removing one power connection.

3. The two timers in the 556 are, of course, in the same chip. This makes the electrical qualities almost exactly the same. Naturally, each 555 is a little different. The 556 solves the problem.

So, considering the preceding factors, make your own decision. Both the 555 and the 556 are readily available to the hobby builder.

Conclusion

In conclusion, it seems accurate to say that the 555 is one of the best chips available today for general purpose timer applications. Books have been written on the various uses of the 555, but this article gives the basic ones that you are most likely to use. Hopefully, the reader will be able to use the guidelines in this article to formulate projects of his own. ■

Thomas M. Tronzo WB1AHL
100 Quarry Street, Apt. 14
Quincy MA 02169

Educate Yourself

—an almost painless method

Ever since I got my ham license in 1976, I had been looking for a simple way to learn solid state electronics. You see, I learned radio and electronics in the 1960s while in college and high school. I had little experience with transistors.

When I came back to the electronics hobby in 1974, solid state had taken charge. With only my knowledge of tube-type circuits, I developed a dislike for anything made of silicon. But I soon realized that I would have to learn semiconductor technology. The question was how to go about it.

I decided to look into correspondence courses. Many are excellent; most are expensive. Also, you may find that the course includes training and equipment that you don't need or want.

The Heath Continuing Education Series is different in several respects. The individual volumes of the series can be purchased separately, if you desire. The individual volumes include *DC Electronics, AC Electronics, Semiconductor Devices,* and *Electronic Circuits.* Also available is a two-volume advanced course, *Digital Techniques,* and in the works are several hobby computer courses. All courses include text, records, final exam, and components for the experiments. The Experimenter/Trainer is optional and is needed for the experiments.

Since I have a good background in dc and ac electronics, I bought only the *Semiconductor Devices* volume, at $39.95, and the *Electronics Circuits* volume, at $49.95. I also picked up the ET-3100 Experimenter/Trainer, which is reviewed at the end of this article.

Each chapter is introduced by a record or optional cassettes. Chapters are subdivided into sections, and after each section is a short exam. The sections can be completed in 20 to 30 minutes, so I found it easy to study for a short time and return later without becoming lost. The section exams quickly reveal any weak points before you move on. At the end of each chapter is a longer review guide and exam.

As I progressed, the chapters took longer to complete. More applications are given and experiments are more complex. Memorization is not really necessary; once you understand the basic concepts, you can always refer back to the text.

I started into the *Semiconductor Devices* course. As each new device is introduced, its construction, packaging, theory of operation, and applications are explained.

The first chapter was a little boring. The theory of hole and electron current is explained. Semiconductor junctions are discussed in detail. These are the fundamentals and a necessary evil.

The text picks up momentum as you move on to diodes. Testing is demonstrated. In Chapter 3, I finally learned how to design a zener diode voltage regulator. And, most important, I found how to calculate the component values.

The chapter on "special diodes" discusses PIN diodes, tunnel diodes, varactors, IMPATT, Gunn, and hot-carrier diodes. Of these devices, the varactor and tunnel diodes are covered in detail. The other gadgets are discussed sufficiently so that now I can understand how the Gunnplexer operates. And I know why PIN diodes are used in my UHF transceiver.

Bipolar transistors are covered in two chapters. One chapter discusses basic operation, biasing, circuit configurations, and testing. The next chapter presents characteristics, operating frequencies, and maximum ratings. Highlights of these two chapters include testing of transistors, determining whether a transistor is a PNP or NPN type, creating characteristic curves, and calculating input impedance. Two experiments are performed. A lot of information is presented, but not quite enough to start designing circuits. This will come much later.

The next chapter is devoted to field-effect transistors. Junction FETs and insulated-gate FETs (MOSFETs) are covered in detail. Experiments are performed for each. Characteristics, circuit configurations, and safety precautions are explained. Depletion-mode and enhancement-mode MOSFETs and applications of each are presented. This chapter was very easy to absorb after two chapters of bipolar transistors.

Thyristors also fill an entire chapter. In case you're wondering, thyristors are a family that's made up of SCRs, triacs, diacs, and unijunction transistors. These are mostly used in power control, switching, and generation of waveforms. Several experiments are provided.

Chapter 9 is an introduction to ICs, and believe me, it's only an introduction. There is just enough information given to familiarize the reader with the construction, packaging, and magnitude of uses for integrated circuits. A

bird's-eye view of digital and linear ICs and applications of each winds up the chapter.

The final chapter is a presentation of optoelectronic devices, beginning with a discussion of the physics of light. Photoconductive and photovoltaic devices are explained. Photodiodes and phototransistors are covered in great detail. LEDs round out the chapter. Two experiments are performed.

This also concludes the *Semiconductor Devices* volume. At this time, a progress report is in order. I now know how all of the important semiconductor devices are used, and how to choose, test, and handle them. I also have some idea of the framework of circuitry that the devices fit into. But it is now time to move on to the *Electronics Circuits* course.

The *Electronics Circuits* course is clearly the best of the group. This is where all of the previous tidbits of information are tied together for useful applications. The same format is used as before, with records, self-tests, summaries, and experiments. However, this course is on a higher level than *Semiconductor Devices* and requires more effort. The seven chapters average about a hundred pages each. The sections are longer. The experiments are more elaborate, too, and 110 components are provided for them. A calibrated scope is needed for some experiments, and this is mentioned in the catalog. I used an Eico 460, which lacks time calibration. I could display the waveforms but not make the measurements, and this bugged me. However, it was more of an annoyance than a real handicap.

The first two chapters are on amplifiers. Chapter 1 explains the basic theory of amplifiers: biasing, classes of operation, applications. The theory is totally explained with no reference to vacuum-tube counterparts. This is a welcome change from most texts. Then, Chapter 2 details just about every type of amplifier you'll ever run into: i-f, rf, audio, video, differential, wideband, dc, and others.

Just to pause for a moment: Most hams with at least a Tech license know something about amplifiers. But did you ever wonder, for example, why a volume control is placed where it is? Or how to design a bass or treble control? This chapter explains some of those finer points.

Not very many math formulas are given, but a lot of guidelines are presented to put circuit values "in the ball park." I learned how various load impedances affect amplifier operation. I also discovered that voltage amplifiers always drive high-impedance loads, such as another amplifier, and power amplifiers usually drive low-impedance loads.

Push-pull amplifiers and their kissing cousins, the complementary and quasi-complementary configurations, are covered in much detail. An experiment is performed that makes use of these amplifiers.

The last sections of Chapter 2 discuss i-f and rf amplifiers and frequency multipliers. This section should be very useful to anyone working with receiving and transmitting circuitry. Subtopics include neutralization, bandwidth, coupling, automatic gain control, stagger tuning, and ceramic filters.

A total of four experiments are performed in the first two chapters.

Chapter 3 covers operational amplifiers. Op amps used to be too complex for most applications, since so many components are involved. Not so today. Now that entire op amps are packaged in IC form, they are as cheap as a single transistor. Uses of this device include analog circuits (adders, integrators, multipliers), oscillators, and differential amplifiers.

A novel use of the op amp is as an active filter. Essentially, the active filter is an RC-network-tuned op amp that behaves like a sharp-tuned LC circuit. Now the big deal is that at low frequencies, resistors can replace bulky inductors with no loss in selectivity. Thus, modern RTTY demodulators can be built without those 88 mH toroids, and with a lot fewer parts.

Four experiments are done in this chapter.

Back to the text. Power supplies take up a full 120 pages—the longest chapter in the entire course. Capacitor, RC, and LC smoothing filters are discussed to great length. Voltage multipliers and elementary regulator circuits are described. The more exotic circuits presented and detailed are the regulators—the emitter-follower, feedback, and op amp regulator. Most important, two experiments are provided for all this good stuff. This chapter winds up with a discussion of shunt regulators, IC regulators, protective circuits, and an analysis of actual TV and oscilloscope power supplies.

Chapter 5 is all about oscillators. Tank circuits are treated in detail and transformer oscillators are touched upon. Those LC oscillators most of you guys memorized for the exam—well, they're all here. And now you find out how the Hartley, Clapp, Colpitts, and Pierce circuits work. One special circuit presented is the Wien-bridge oscillator. Other topics well covered are crystals, tuning of oscillators, and RC networks. Four experiments are performed on oscillators.

Chapter 6 is on pulse circuits. This stuff gets really heavy. The first section treats sine waves and goes on to explain how sine waves can be combined to form any other waveform. Then you move on to waveshaping circuits, diode clippers, transistor clippers, and clamping circuits. The rectangular wave generators covered are the astable multivibrator, monostable multivibrator, bistable multivibrator, and Schmitt trigger.

The 555 IC timer is covered in great detail. This is the cheapest and one of the most versatile pulse generators available.

Ramp generators—widely used in TV and oscilloscope sweep circuits and lately in digital voltmeters—are described. Both the op amp and sawtooth types are detailed.

Pulse circuits are rapidly growing in importance and application. As digital technology advances, timing devices will replace analog-type circuits. There are three experiments on pulse circuits.

The very last chapter is on modulation. AM waves and sidebands are discussed at the start. An explanation of percent modulation and AM transmitters follows. Four modulator circuits are covered: emitter, base, collector, and differential.

Receiver circuits are analyzed. The trf receiver is touched on. But a lot of time is spent on superhet mixer and converter circuits. The AM section concludes with an analysis of SSB and the diode balanced modulator.

FM is the subject of the last section of this chapter. Text includes varactor modulators, receivers, slope detectors, discrim-

inators, and ratio detectors.

One experiment on AM is provided in this last chapter.

Well, class is over. Here are my own thoughts: I now have a lot more confidence when working with almost any circuit or project. When I see a project in a magazine, I can freely substitute components now that I know which ones are critical. Maybe I can even improve on the circuit. Soon, I hope to be designing projects of my own. This has brought me a long way, but I have also realized how much I have to learn.

In closing, the Heath series is *not* kid's stuff. The course requires diligent study. It took me about a month to complete each volume, working for around an hour every night. If you're a real hotshot on semiconductors, you might try just the *Electronic Circuits* volume.

On the other hand, if you're *really* out of it, start out with *AC Electronics* or even *DC Electronics*.

The Heath Experimenter/Trainer

The Heathkit Model ET-3100 Experimenter/Trainer is intended for use with the Continuing Education Series. Although it is intended for performing the experiments, many features make the ET-3100 useful long after the course is completed.

First, there are the power supplies. The dc supplies are true (+) and (−) supplies, independently variable from 1.2 to 15 volts. From no load to full load, the regulation is 1%. Full load is 100 mA from each dc supply. The ac supply is fixed at 15 and 30 volts rms, with maximum load at 200 mA.

The signal generator is variable from 20 Hz to 20,000 Hz in two ranges. Sine and square wave outputs are available. A large breadboarding socket and panel-mounted 1k and 100k pots are included.

Assembly of the unit is not too difficult. Nearly all of the components mount on the large printed circuit board, which doubles as the front panel. There are a few minor annoyances during assembly: The breadboarding socket is fitted with ninety-six metal inserts, all of which are installed by the builder. Changing the fuse could be a career in itself, since it is hidden within the case in a separate compartment. During initial testing, the case halves had to be separated, and the case leads are not very long. Total assembly time for me was just under six hours. A VOM is required for testing.

The ET-3100 lived up to its specifications with no defects noted. The (+) and (−) dc supplies were loaded to 111 mA and 119 mA before loss of regulation occurred.

General impressions: The ET-3100 at first appears toy-like, but its low profile reduces fatigue and is less tiring than other breadboard circuits. Nonskid feet prevent the unit from sliding around the bench. Plenty of hookup wire is provided for the experiments. Hookups are much easier than with the once-popular spring clips. The (+) and (−) power supplies are ideal for linear ICs. One feature lacking that would be handy is a built-in voltmeter. That would free my VOM for other uses. However, it is not a hardship.

All in all, the kit is worth the $59.95 if you're any kind of an experimenter. It sure beats wrestling with several dozen wild alligator clips. ■

Peter A. Stark K2OAW
Box 209
Mt. Kisco NY 10549

Novel RTTY Autostart

—*we could write a book . . .*

Over the years, UARTs and other digital circuits have been used more and more for RTTY circuitry. But here is a new application for UART—a digital autostart. For those not familiar with RTTY or radioteletype, an autostart circuit is one which automatically turns on the motor of a teleprinter when RTTY signals are received. This means that you can leave your receiver tuned to a RTTY frequency continuously, and the teleprinter will automatically copy all RTTY activity on the frequency, even in your absence.

Most autostart circuits detect the presence of a carrier on frequency; they can easily be fooled by CW signals if they happen to be on just the right frequency. They will also turn on if a signal is too weak to be fully copyable, or if the transmission is sent too fast or too slow for the teleprinter to copy. But the circuit described here doesn't have these faults.

Actually, this circuit can do several things in addition to its autostart ability, with slight modifications. It can convert the speed up or down. It can block out certain types of scrambled characters so they do not get printed. It can also be modified to automatically convert itself to copying just the mark or just the space, rather than both.

The heart of the circuit is the UART, or Universal Asynchronous Receiver-Transmitter. Though it has appeared in a number of amateur projects, here is a simple explanation of what it does. The UART is a 40-pin integrated circuit made in various forms by a number of IC manufacturers. Each manufacturer has his own number for it; some of the more commonly available ones are the S1883 by American Microsystems (AMI), the AY-5-1012 by General Instruments, the COM 2502 by Standard Microsystems, the 6402 and 6403 by Intersil and Harris, and the TR1602 by Western Digital. Most of these are interchangeable except for some minor differences in power supply requirements and voltage levels. As shown in Fig. 1, the typical UART has two parts, the receiver and the transmitter.

When RTTY data is sent over the air, it consists of two distinct voltage levels called a mark and a space; each character consists of a particular combination of these levels, preceded by a start pulse and followed by a stop pulse. Since voltages cannot be sent over the air, they are converted into two different frequencies in the transmitter; these two audio frequencies or tones are sent over the air, received by the station receiver, and converted back into two voltage or current levels by the terminal unit or TU. As sent, each character consists of a start pulse, five data bits each of which could be either a mark or space, and then a slightly longer stop pulse. These are sent in order, one after the other, and this process of sending the data bits sequentially is called *serial* data.

In the UART receiver, these serial bits of data are grabbed by flip-flops as they arrive and converted into a *parallel* signal, where all five of the data bits exit the UART at the same time over five different IC pins. (The UART is a universal device intended for other applications than just RTTY, and it can handle up to eight bits per character, so that it actually has eight parallel output pins rather than just five.)

When RTTY signals are sent out over the air, the exact spacing between bits is critical, since the transmitting teleprinter and the receiving teleprinter must operate at exactly the same speed. The most common amateur speed is 60 words per minute; in this

mode, each bit of the transmission lasts exactly 22 milliseconds. In order to time these bits properly, the UART requires an external pulse signal from a clock oscillator, and this sets the speed. This signal must provide exactly 16 pulses during each bit of the RTTY signal; in our case, it requires 16 pulses within 22 milliseconds, which works out to a frequency of 727 pulses per second.

In addition to receiving the data, the UART receiver circuitry checks for some simple errors, such as the absence of the proper start pulse for the required duration or the absence of the correct stop pulse. If the start pulse is wrong, then the UART simply ignores the following character. If the stop pulse is wrong, then the UART receives the character but provides an output on one of its pins to indicate that the stop pulse was wrong.

The transmitter portion of the UART is the exact opposite of the receiver portion. Starting with a parallel signal input and an external clock signal to set the output speed, it generates a serial output which includes first the start pulse, then the five data bits, and finally the stop pulse. For 60 wpm transmission, the clock again has to be at 727 Hz. The receiver and transmitter portions of the UART are independent and can be used separately or together at the same time.

Being a universal device, the UART has several modes of operation. First, it can handle codes of 5, 6, 7, or 8 bits. By just changing a few pin connections, it can handle 8-bit ASCII coding of the type used in computer equipment, 5-bit Baudot code of the type used in amateur RTTY, and other codes as well. It can also generate and receive an extra bit, called the *parity* bit, which is used to detect errors in the transmission. Moreover, the receiver and transmitter can operate at different speeds so that it can receive at one speed and transmit at another. Not bad for an IC which typically costs between $6 and $15, depending on source!

Fig. 2 shows the block diagram of an autostart system based on the UART. The serial input to the UART is taken from the terminal unit or TU; as mentioned earlier, this is the converter which takes in audio tones from the station receiver and converts them into on/off keying signals for the teleprinter. The UART receiver converts these serial pulses into parallel data which is immediately fed over to the transmitter portion of the UART, which converts the signal right back into serial form. At first glance, it looks as though the output of the circuit is just a delayed form of the original.

Actually, in the simplest case, this is true. But if the input signal is distorted, then the output of the UART is a cleaned-up version which has been regenerated. Typically, the RTTY signal coming over the air may have some *bias distortion*. This is a distortion of the on/off pulses in such a way that they are not all equally long, with the result that the teleprinter may have trouble deciphering the correct letters. As long as the bias distortion is not so great that it succeeds in confusing the UART as well, it will be received by the UART receiver, converted into parallel, and then regenerated by the UART transmitter with no bias distortion whatsoever.

In the block diagram of Fig. 2, both the receiver and the transmitter are driven by the same 727 Hz oscillator; thus both are set up for 60 words per minute transmission. This oscillator is a simple circuit using a 555 timer IC, two resistors, and two capacitors. By simply building one more pulse oscillator such as this one, you can feed the receiver and transmitter from each and have the UART receiver operate at a different speed from the transmitter. A multi-function speed converter can be built if you build three or four such oscillators, one for each RTTY speed you intend to use, and then use two SP4T switches to select one of the four for the receiver and another for the transmitter. A simple DPDT switch added to this will allow flipping the two speeds so that you can reverse the speed conversion for receiving and transmitting over the air. For example, you could set your teleprinter permanently for 100 wpm; to use 60 wpm over the air, you would speed up received signals from 60 to 100 to fit your printer. In transmitting to the other station, you would slow down the 100 wpm signal from your keyboard to 60 wpm over the air. The correct oscillator frequencies are 727.27 Hz for 60 wpm, 812.12 Hz for 67 wpm, 909.09 Hz for 75 wpm, and 1192.25 Hz for 100 wpm. An electronic speed converter such as this is a great improvement over the traditional solution—having a gearbox on your teleprinter for changing speed.

In addition to regenerating the signal and allowing the speed to be changed,

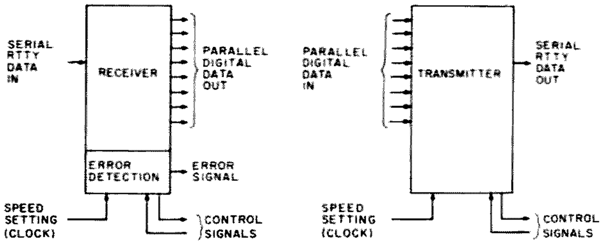

Fig. 1. UART block diagram.

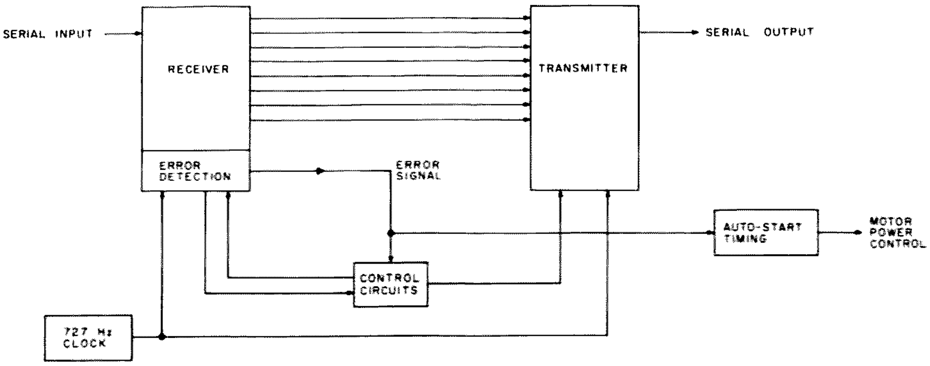

Fig. 2. System block diagram.

the UART receiver can be used to clean up received copy and detect valid signals. This is done by using the error-checking capability of the UART. The receiver has three error output signals—the parity error, the overrun error, and the framing error, on pins 13, 15, and 14 respectively. The parity bit is an extra bit that may be added by the transmitter depending on the particular bit pattern used by the character being sent; the receiver then checks that parity bit to make sure it is correct. If the parity bit is wrong, that indicates that one of the bits in the character has been changed—an error, which causes the parity error output to go positive. This is not very useful in amateur RTTY, since the Baudot code used does not include parity checking. (However, here is a great idea: If the station on the other end is using a UART to transmit, he could wire it up so as to add a parity bit at the end of each of his characters. Such a signal would still be perfectly copyable by standard teleprinters, but those users having a UART in their receiving setups would be able to check parity. I am not sure whether current FCC regulations would permit the parity bit, but it should not bother the FCC monitoring stations since they could still copy on their standard machines without change.)

The second error output is the overrun error, which is also not of much use in typical applications as it simply means something is wrong in the control circuits connected to the UART.

The framing error output, on the other hand, is useful. This signal comes on when the stop bit, which is supposed to be at the end of each character, is missing or wrong. The UART actually checks each and every character—be it letter, number, or punctuation mark—for the proper stop pulse. If the stop pulse is wrong, the framing error output on pin 14 changes from its normal 0 volts to approximately +5 volts and stays at the higher voltage until the next correct stop pulse on the following character.

The framing error output can be used in several ways. First, it can be used to turn off the UART transmitter so that it does not regenerate the scrambled character. In this way, only those characters received with the correct stop pulse would actually get through the UART. This can be good or bad, depending on how the character got garbled. Very sharp pulse-type noise such as ignition noise might affect only a very small portion of a character, with the result that the stop pulse might be wrong and yet the rest of the character could be okay. On the other hand, the stop pulse may be correct and yet the rest of the character could be wrong. With atmospheric noise or fading, you have the other situation: If the stop pulse is wrong, it is quite likely that the entire character is wrong. As one of its features, this autostart has the capability to blank out (not print) those characters having the wrong stop pulse.

Finally, the framing error output is used to turn the teleprinter motor on and off, through appropriate timing and control circuitry. When receiving a clean, undistorted RTTY signal, the UART will never generate a framing error output. In this case, after a short delay, we turn on the teleprinter motor. When receiving a bad signal, on the other hand, the framing error output will periodically come on. In the presence of noise, CW, or RTTY signals of the wrong

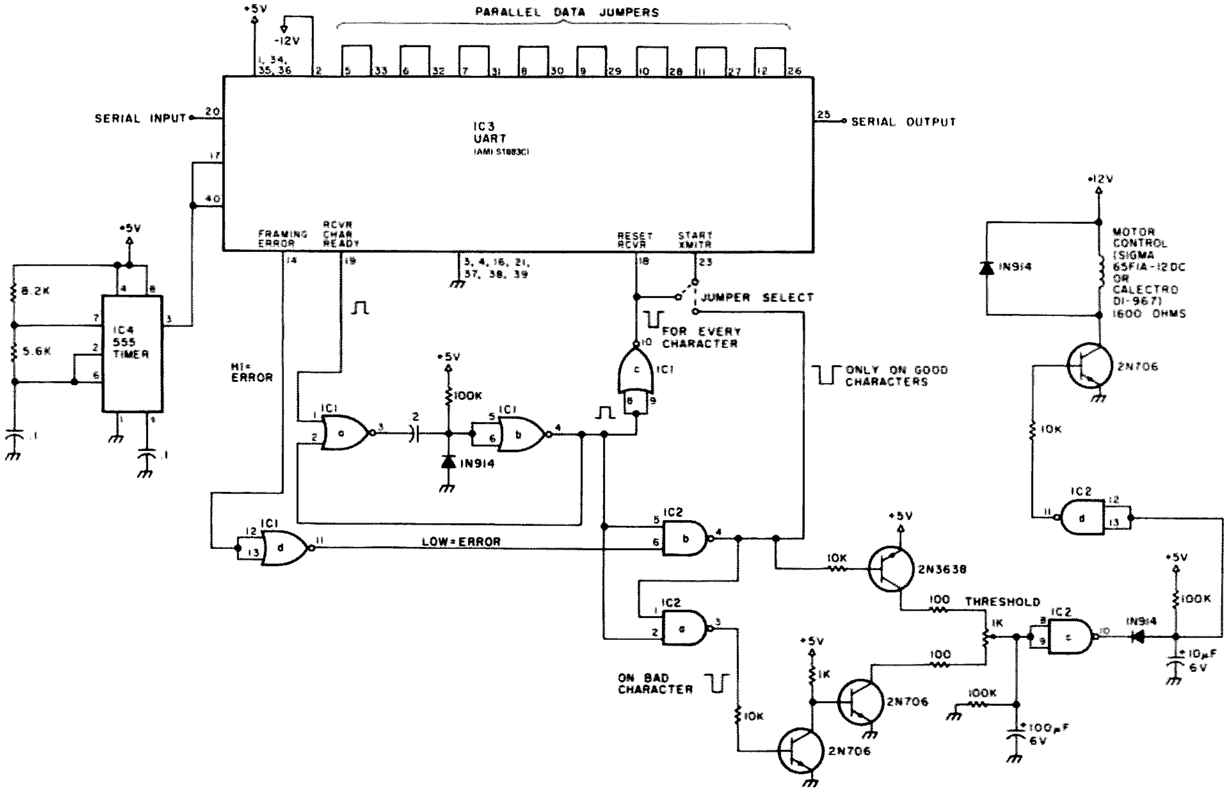

Fig. 3. Complete autostart diagram. IC1—4001 quad 2-input CMOS NOR. IC2—4011 quad 2-input CMOS NAND. Both ICs—ground pin 7, +5 V to pin 14.

speed, the framing error will continuously pulse on and off at random. If this happens, the timing and control circuits turn off the motor. The autostart timing circuit has a potentiometer which can be set to any threshold you wish. For example, it can be set so that out of any five characters received, at least three or four must have the correct stop pulse. In this way, it is possible to set the autostart so that it will be completely immune to CW or other interference and will copy only good signals.

There is another interesting possibility here, which I will mention to indicate how it may be done, but which I have not actually tested. In the autostart timing circuits, there is a capacitor whose voltage indicates how good the copy is. On bad signals or noise, its voltage will be near 0 volts; on good copy, it will read near +5 volts. Suppose you had two antennas, two receivers, and two TUs, each driving its own UART autostart circuit. Simply by comparing the voltages across the two capacitors, you could tell which receiver was getting a better copy and switch that signal to the printer. With two different antennas—perhaps one horizontal, the other vertical—you would get the effects of diversity receiving, since fading at the two might be different and at any given time one or the other antenna might provide a signal while the other is dead. Another possibility is to have one antenna and receiver, but three different TUs arranged so that one copies both marks and spaces, one copies only marks, and one only spaces. By comparing the voltages across this one capacitor in all three UART circuits, automatic switching between the TUs could produce the best copy. An even more complex circuit could compare the parallel outputs of the three UARTs and print only those characters that two out of the three UARTs agree on. But enough of this diversion—it's beyond the scope of this article. Perhaps next year . . .

Back to the autostart. Fig. 3 shows the complete diagram. Up at the top, we have the UART. The serial input is on pin 20 and the serial output is on pin 25. These are TTL-compatible outputs and connection to your own TU depends on the model, so it is not shown. *Do not connect into the loop supply.* Multiple power supply and ground connections are required as shown, and the parallel data jumpers are also shown at the top. For Baudot, only the jumpers connected to pins 8 through 12 are required, but in case you decide at some later time to use this for ASCII, you might as well connect all eight jumpers. In any case, it is not nice to leave inputs on MOS ICs unconnected because of the possibility of static damage, so these connections are important from a safety point of view.

A 555 timer, IC4, provides the 727 Hz pulses for UART timing. The values of resistors and the capacitor connected to pins 7, 2, and 6 are those which will cause operation near 727 Hz. For precise frequency adjustment, the 5.6k resistor could be replaced by a 10k pot. In my case, I simply tried several different combinations until I got one that hit 727 Hz exactly. This clock signal is connected to pin 17, which is the clock input for the UART receiver, and pin 40, for the UART transmitter. For multi-speed operation, pins 17 and 40 could be disconnected from each other and each driven from its own oscillator.

Each time the UART receiver gets a new character on its serial input, it provides a narrow pulse on pin 19. This pulse is stretched to about 20 milliseconds by the one-shot made up of IC1a and IC1b. (IC1 and IC2 are CMOS gates and cannot be replaced by TTL without major changes, as the timing circuits connected to IC1b and IC2d would have to be changed completely.) The output of IC1b is a longer positive pulse which is inverted into a negative pulse and sent to UART pin 18, which resets the receiver so that it can accept the next character.

As each character is received, the framing error output on UART pin 14 goes low if the stop pulse is received correctly, and goes high if it is not. This is inverted by IC1d and gated with the positive pulse appearing for each character in IC2b. The output on pin 4 of IC2b is a negative pulse which appears only on good characters, that is, on characters which have been received with the correct stop pulse. This resulting pulse can be applied back to pin 23 of the UART, which starts the transmitter. A jumper connected to pin 23 allows one of two options. If the jumper is connected to pin 18, then all characters received by the UART will be sent out through the serial output, regardless of whether they are correct. On the other hand, if the jumper goes down to IC2b, then only correctly received characters would be output. In my system, this jumper is permanently connected to IC2b, but you might prefer an SPDT switch at this point. If so, connect a 100k resistor from pin 23 to ground to prevent static damage to the UART as the switch is changing.

see page 317

As mentioned before, the output of IC2b is a negative pulse which comes at the end of each correctly-received character. This is gated with the pulse coming from IC1b, which is a positive pulse appearing for every character. The result, at the output of IC2a, is a negative pulse which appears only on *bad* characters, that is, characters with the wrong stop pulse.

When a good character is received, the negative pulse turns on the 2N3638 PNP transistor, which goes on and feeds some current through the 100-Ohm resistor and the threshold pot into the 100-uF capacitor. Since the pulse only lasts about 20 milliseconds, the capacitor gets a shot of current which causes its voltage to rise slightly.

When a bad character is received, the negative pulse from IC2a turns on the second 2N706 transistor, which discharges the 100-uF capacitor through the 100-Ohm resistor and the threshold pot. Again, since the pulse only lasts a short time, the capacitor is not fully discharged; instead, its voltage just falls by a slight amount. How much the capacitor charges and discharges depends on the setting of the threshold pot. On the top end, it would charge rapidly from just a few good characters, while

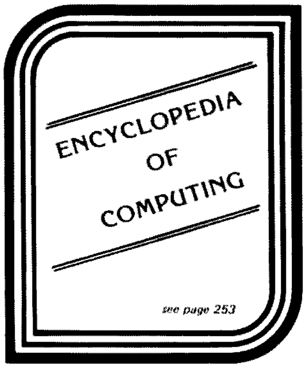

many bad characters would be required to discharge it. Adjusted to the bottom end, the pot would have the opposite effect—many good characters would be required to charge the capacitor, while just one or two bad ones would discharge it again. In the middle of the pot is a range of useful settings which allows a certain proportion of bad characters amidst the good, but not too many. In the absence of any characters at all, the 100k resistor directly across the capacitor would discharge it in about 15 seconds (or less if the preceding copy had been bad, so that the capacitor was not fully charged to begin with). Thus the voltage across this capacitor indicates how good the copy is.

The capacitor voltage is monitored by IC2c and applied, through a simple time delay, to IC2d, which drives a keying transistor to control a low power relay. The purpose of the timing circuit between IC2c and IC2d is to prevent the power from going on and off too fast on marginal copy. Once the motor is on, it will stay on for a few more seconds even if the signal immediately gets bad. (But the bad characters will not be printed if the jumper on pin 23 of the UART is connected to IC2b.)

The keying relay should be a low power model such as the Sigma 65F1A-12DC or Calectro D1-967, both of which have a 1600-Ohm coil, so that there is not too much of a load on the CMOS circuitry. Relays with lower resistance coils could be used if the 2N706 driver transistor is replaced with a Darlington transistor.

In operation, the autostart circuit seems to work reasonably well. On the low bands, where noise is a problem, it works best when combined with a standard tone-activated autostart. It then reduces the probability of falsely turning on the printer motor in the presence of noise or CW. On VHF, where noise is not so much of a problem, it is much more valuable, especially since often phase-locked-loop or other simple TU decoders are used, which are not readily usable with conventional autostart circuits; in that case, the UART autostart is extremely useful.

If better adjustment is desired, the 1k threshold pot may be replaced by two separate pots in the range of 1k to 10k each, allowing independent adjustment of the charging and discharging currents to the 100 uF capacitor. It is then possible to set the threshold for any ratio of good to bad characters and any time delay for turn-on.

I have my threshold control set so that one bad character out of every five is okay, but two bad ones out of every five turns off the motor. This seems to be an acceptable compromise. All in all, it is an interesting circuit, and it has many possibilities for expansion, some of which I hope to try soon. ■

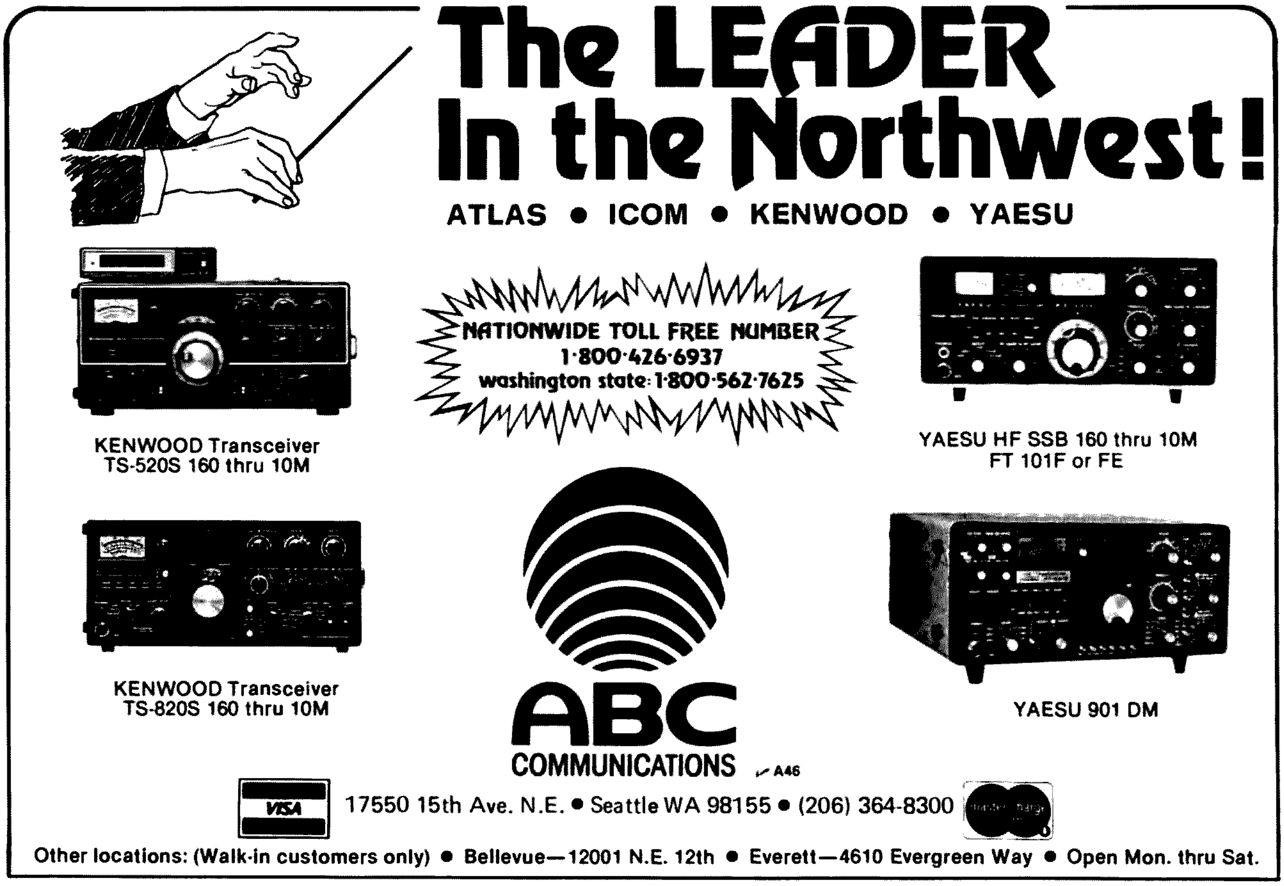

Reader Service—see page 323.

The Easiest Offset Ever

—a treat for 2

Marion D. Kitchens K4GOK
7100 Mercury Ave.
Haymarket VA 22069

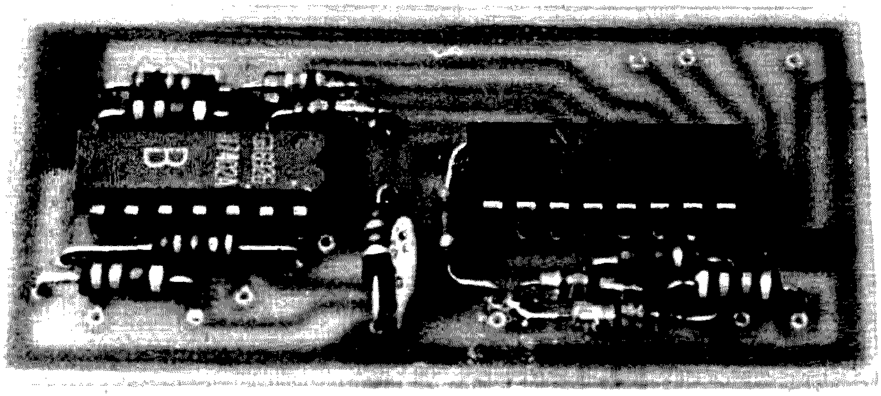

Assembled circuit board—standard TTL version.

This simple digital circuit automatically provides the proper 600-kHz offset frequency for use on standard 146-MHz and 147-MHz 2 meter FM repeaters. 600 kHz is subtracted for 146-MHz repeaters and 600 kHz is added for 147-MHz repeaters. Normal repeater, simplex, or inverted operation is obtained by positioning a single switch. Simplex frequencies are automatically obtained on the standard 146-MHz and 147-MHz simplex frequencies, independent of the Repeater-Simplex-Inverted switch position. These functions occur automati-

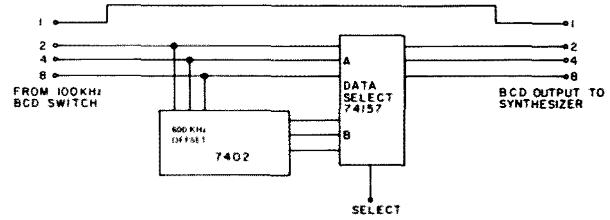

Fig. 1. Functional block diagram.

cally, requiring only selection of the receive frequency and operation of the PTT switch.

The circuit requires only one set of BCD switches, so synthesizers employing two sets of BCD switches can be set to two of your favorite repeater frequencies and then switched from one to the other by simply flipping the synthesizer receive switch from one set of BCD switches to the other. Likewise, the user can dial in a frequency, say 146.52 MHz, on one set of BCD switches, while transmitting on 146.37/.97 with the other set of BCD switches. Operation on either 146.52 MHz simplex or on 146.37/.97 MHz repeater is obtained by flipping the synthesizer receive switch to the desired frequency. This is fast, easy, and convenient operation as compared with the usual switching that must be done with most synthesizers.

The circuit presented here will operate with synthesizers that use standard BCD frequency-control switches and have TTL-compatible programmable dividers. The circuit is very simple, requiring only two IC chips and associated resistors and diodes. Two circuit variations are presented: one using standard TTL chips and one using the low-power 74L00 chips. Both variations use the same circuit board with only resistor value changes.

Circuit

This 600-kHz offset circuit is based on a similar circuit by Paul Quinn WB4PHO.* WB4PHO's article was the first place that I had seen the required digital logic so simply implemented. He presents a very simple solution to what could have become a very complicated problem.

The 600-kHz offset circuit operates on the 100-kHz information from the synthesizer BCD switches. The circuit is connected between the BCD switches and the synthesizer programmable dividers. Fig. 1

*P. Quinn WB4PHO, "Automatic 600-kHz Up/Down Repeater-Mode For Two-Meter Synthesizers," *Ham Radio*, January, 1977, page 40.

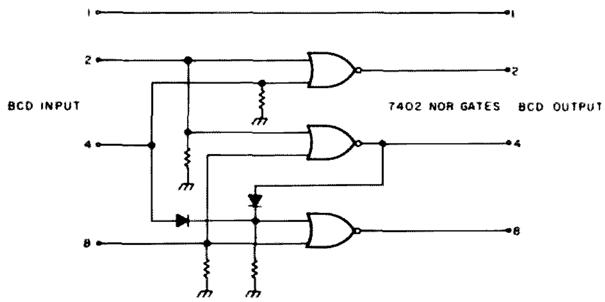

Fig. 2. 600-kHz offset logic diagram.

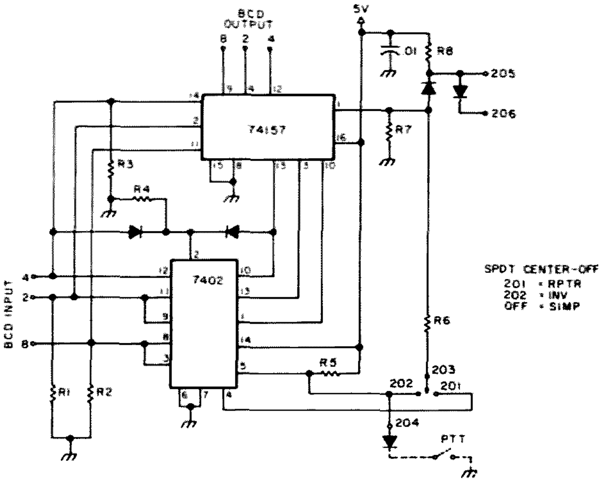

Fig. 3. 600-kHz offset schematic diagram.

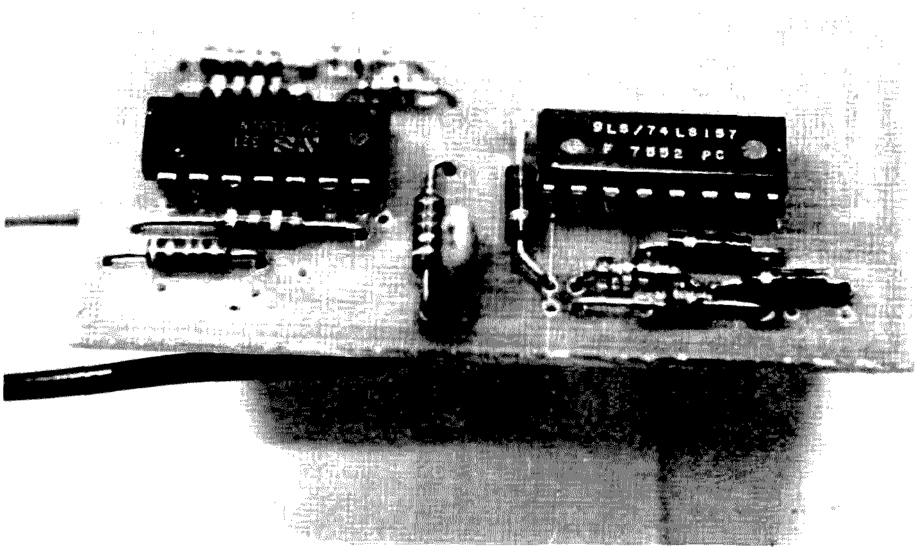

Assembled circuit board—low-power version (74L00 series).

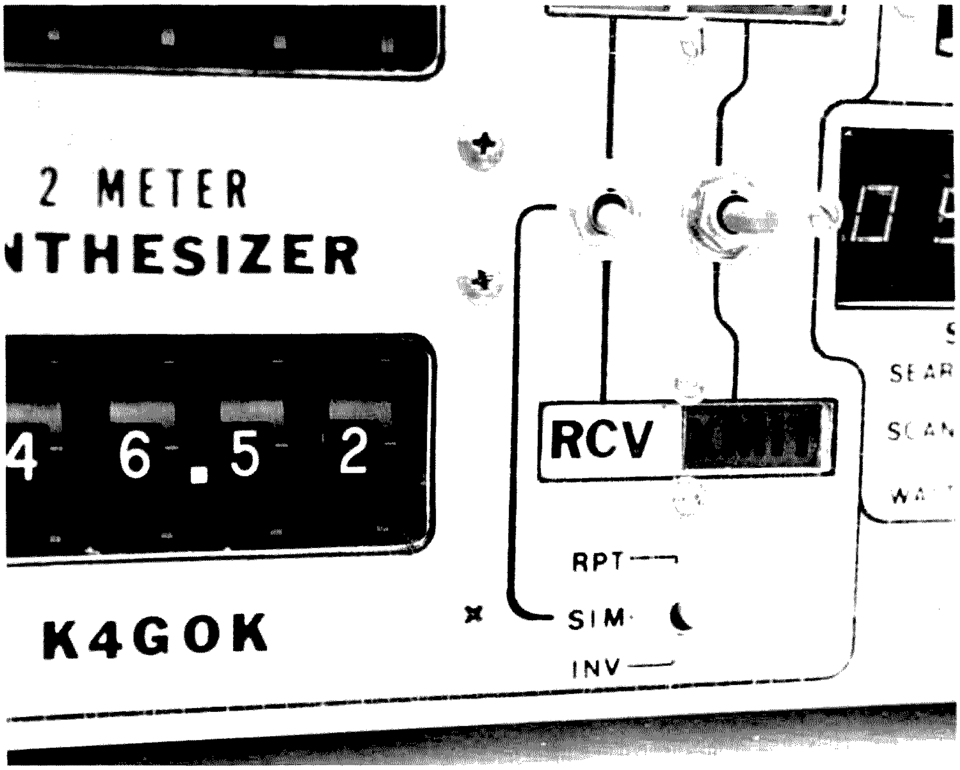

Close-up of RPT-SIM-INV switch installation.

	Receive Frequency	100-kHz BCD Switch Output DCBA	7402 Output DCBA	Resulting Transmit Frequency
	147.0X	0 0 0 0	0 1 1 0	147.6X
147 MHz	147.1X	0 0 0 1	0 1 1 1	147.7X
Repeaters	147.2X	0 0 1 0	1 0 0 0	147.8X
	147.3X	0 0 1 1	1 0 0 1	147.9X
Simplex	146/7.4X	0 1 0 0	0 1 0 0	146/7.4X
	146/7.5X	0 1 0 1	0 1 0 1	146/7.5X
	146.6X	0 1 1 0	0 0 0 0	146.0X
146 MHz	146.7X	0 1 1 1	0 0 0 1	146.1X
Repeaters	146.8X	1 0 0 0	0 0 1 0	146.2X
	146.9X	1 0 0 1	0 0 1 1	146.3X

Table 1. 7402 circuit input/output logic. X indicates any number 0-9.

shows a functional block diagram. The 100-kHz information is applied both to the 74157 data selector and to the 7402 600-kHz offset logic. The 74157 performs as a 4PDT switch (only 3 poles are actually used in this application). When the 74157 SELECT line is low, its output is equal to its A input, in this case the BCD switch information. When the SELECT line is high, the 74157 output is equal to its B input, which is the BCD information ±600 kHz.

The actual addition and subtraction of 600 kHz takes place in the 7402 and its associated diodes. The logic diagram is shown in Fig. 2. Notice that only the 2, 4, and 8 bits of the BCD information are used. The 1 bit is simply fed through. The truth table for this portion of the circuit is shown in Table 1. The table shows input frequencies and circuit BCD input and the resulting BCD output and frequencies. Note that for normal repeater operation, proper frequencies are obtained. A 146.97 MHz input (for receive) yields a 146.37 MHz output (for transmit); a 147.15 MHz (for receive) yields a 147.75 MHz output (for transmit). All input frequencies from 146.40 to 146.59 MHz and 147.40 to 147.59 MHz result in simplex operation, i.e., the input frequency equals the output frequency.

Since the circuit operates only on the information in the 100-kHz BCD switch, it cannot distinguish between 146 and 147 MHz frequencies. A 146.31 MHz input will then result in a 146.91 MHz output. This feature, when combined with the proper PTT switching logic, allows inverted operation. When the Repeater-Simplex-Inverted switch is in the Repeater position, the PTT switch causes the 74157 to provide the BCD-switch information to the synthesizer for receive and to provide

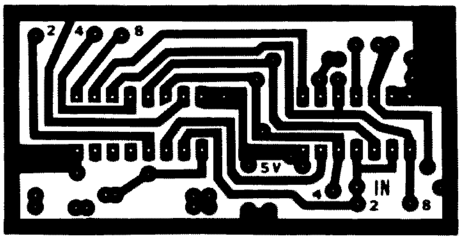

Fig. 4. 600-kHz offset circuit PC board.

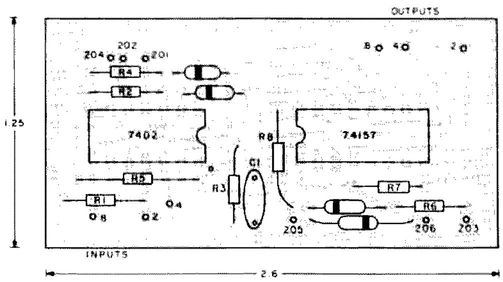

Fig. 5. 600-kHz offset circuit parts location.

the 7402 output information for transmit. When the switch is in the Inverted position, the PTT logic is simply inverted to invert the above condition. When in the Simplex position, the BCD-switch information is fed through the 74157 independent of the PTT switch. Note that for the standard simplex frequencies (146.40 to 146.59 and 147.40 to 147.59), simplex operation occurs independent of the position of the Repeater-Simplex-Inverted switch, because the BCD-switch information and the 7402 output information are the same for these frequencies. The complete schematic diagram is shown in Fig. 3.

Construction

Construction is straightforward through the use of either the printed circuit board shown in Fig. 4 or with vectorboard or other means the builder may have available. Layout is not critical. Fig. 5 shows the parts location for the PC board. The synthesizer XMIT select switch (for selecting between the two BCD switch sets) must be replaced with a DPDT center-off switch and wired as shown in Fig. 6. This switch is set in its center (off) position for operation of the 600-kHz offset circuit. The 600-kHz circuit is disabled, and normal synthesizer operation is obtained with the switch in either of its other two positions.

Disconnect the 2, 4, and 8 leads between the 100-kHz BCD switches and the synthesizer programmable dividers and rewire according to Fig. 7. Then wire the Repeater-Simplex-Inverted switch, and the unit is ready to be tested. Power should be from a 5.0-volt regulated source. Circuit operation should be checked before on-the-air operation is tried. Make sure that the proper BCD information exists at the circuit output for all conditions of input frequencies, PTT-switch position, and Repeater-Simplex-Inverted switch positions.

If improper operation is experienced, check to see that the input pull-down resistors do pull the gate inputs to 0.8 volts or less. Also check to see that the BCD frequency switch output is capable of driving the gate inputs to about 1.5 volts. The standard TTL version requires about 10 mA total current at 1.5 volts input to the gates under worst-case conditions. The low-power version (74L00 series) requires about 2 mA at 1.5 volts. Table 2 shows the component values for both the standard TTL and the low-power versions.

Other Offsets

Offsets other than 600 kHz may be of interest to some readers. Fig. 8 shows a concept for a selectable offset circuit. The desired offset is selected by the BCD switch and is subtracted (for 146-MHz repeater frequencies) or added (for 147-MHz frequencies) by the 74181 arithmetic logic chip. The 7400 chip provides the control logic for transmit-receive and repeater-simplex-inverted operations. This concept is presented for the experimenter or home brewer who wishes to pursue it; it is a "paper design" at this time and has not been tested.

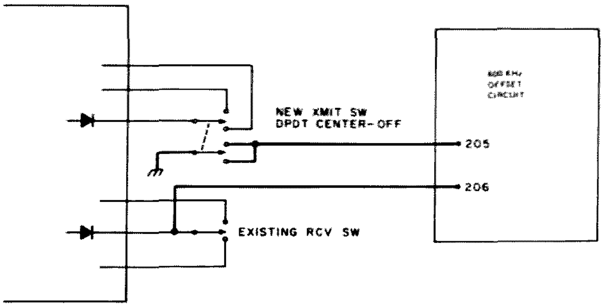

Fig. 6. Synthesizer switch wiring. Replace the transmit switch and add wiring shown in heavy lines.

Acknowledgement

I would like to express my indebtedness to Paul Quinn WB4PHO, whose article in *Ham Radio* provided the basis for this circuit. ■

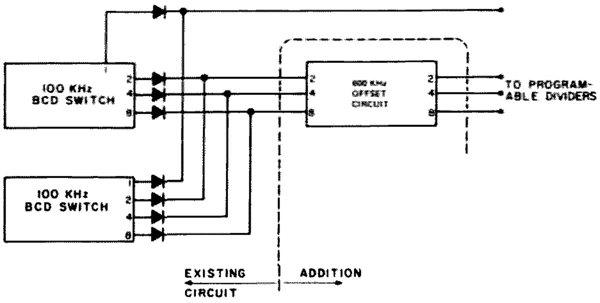

Fig. 7. Connection to synthesizer is between the BCD switches and the programmable dividers.

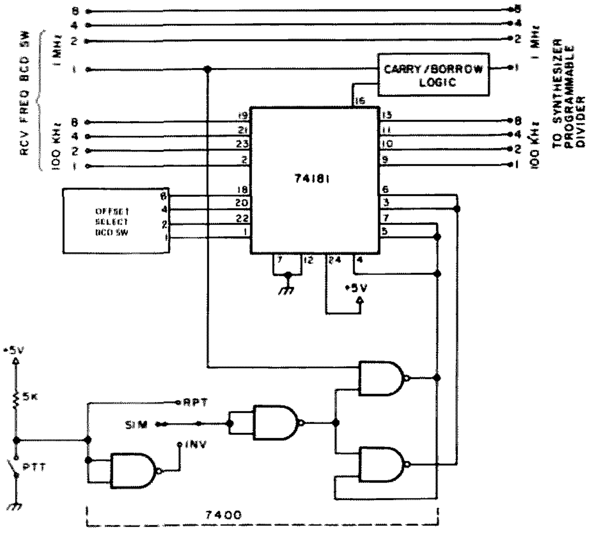

Fig. 8. Selectable offset circuit.

Component	Description	
	Standard TTL	Low Power
U1	7402	74L02
U2	74157	74L157
R1	330 Ω	2.2k
R2	330 Ω	2.2k
R3	560 Ω	2.2k
R4	1k	4.7k
R5	1.8k	2.2k
R6	470 Ω	1k
R7	1k	2.2k
R8	1k	2.2k
C1	.01 uF	.01 uF

All diodes are 1N34 or similar.

Table 2. Component values.

Ron Richards WB2QEL
30 Evelyn Drive
Commack NY 11725

The Chip Switch

—a digital troubleshooting triumph

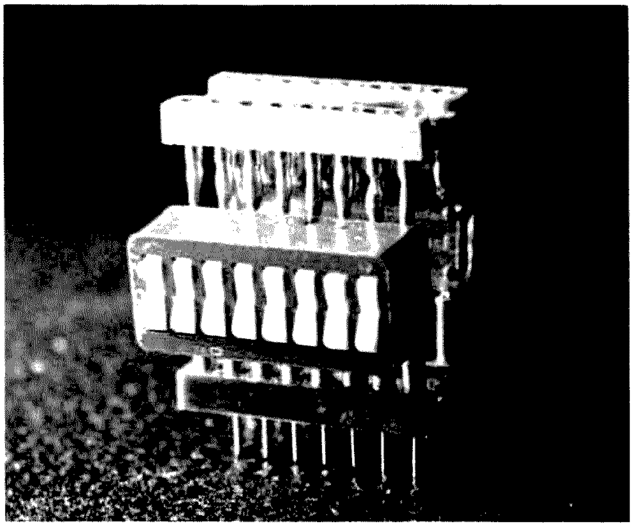

Photo 1.

Often, while troubleshooting or debugging a digital circuit, one finds it necessary to isolate one or several leads of an IC in order to examine the pins in question. Usually, the chip is removed from the socket, the desired pins are bent away from the package, and the device is replaced in the socket. This technique may work once or twice on the same chip, but, unfortunately, it may result in a broken pin. If the part is an expensive one, this can be catastrophic.

For this reason, the "chip switch" was developed. Fabricated from readily available components, this tool will be a valuable addition to every digital workbench. It allows the experimenter to isolate any number of pins on an IC and, with the use of a DIP clip, patch any input to these isolated pins.

The chip switch is composed of a 16-pin header, two 8-position DIP switches, and a 16-pin socket. Photo 1 shows the typical construction. Each DIP switch is prepared by carefully bending the leads outward from the body of the switch, making them vertical when the switch is oriented in the position used. The lower contact row of each switch is soldered to the header. Finally, the DIP socket is positioned along the top contact row of each switch and then soldered in place.

Photo 2 shows the chip switch in actual use. It is ideal for changing parallel load bits to counters right in-circuit, or testing driver outputs with and without loads attached. When all the switch positions are on, the inserted IC will function as normal; by placing the desired position off, the associated pin is now open.

A few comments about parts selection should be made. First, the DIP switches are readily available, manufactured by AMP or Grayhill, and offered by several surplus houses. The 16-pin socket should be one with machined contact pins to assure a good solid mechanical assembly with the switches; the leaf-style socket contacts are too weak. The 16-pin header, normally used for wire-wrap panel installation of discrete components, is also comprised of the machined contacts and is available through parts distributors, manufactured by Augat or Robinson-Nugent.

After just a few minutes of assembly time, the chip switch will prove itself to be an outstanding little device that will make you wonder how you could have gotten along without it! ■

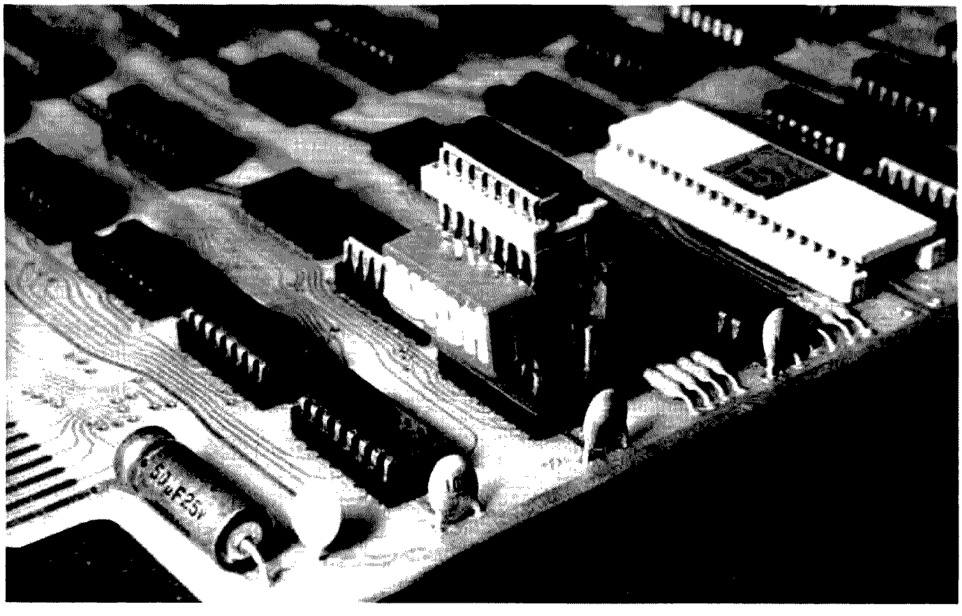

Photo 2.

STUART ELECTRONICS
S38
578 KENNEBY RD.
AKRON, OHIO 44305
(216) 798-9431

40-80-160 METERS
TOWER TUNER
RESONATES YOUR TOWER

Now you can easily use your entire tower and present beam system as a complete low angle radiator on 40, 80 and 160 meters. It is common knowledge that a dipole or inverted-vee must be at least ½ wave length high (120 feet on 80 meters!) in order for it to be a low angle radiator. But your existing tower, if fed with the Stuart Electronics TOWER TUNER, can be made to be an optimum low angle radiator on 40, 80 and 160 meters. The Stuart TOWER TUNER can be installed and easily adjusted to a low swr on any tower no matter what the size or type. Tower can be grounded or not. Radials not necessary. No more haywire appearance of dipoles and I-V's. Even your wife will love it. The Stuart TOWER TUNER takes up virtually no extra space but greatly outperforms dipoles and I-V's at the same height plus it is easily adjustable from ground level. Start making better contacts on the 40, 80 and 160 meter bands with an antenna system that really gets out. The Stuart TOWER TUNER will handle 500 watts output.

The STUART TOWER/TUNER is a modern RF matching device designed to match virtually any antenna/tower system to 50 ohm coax and will present a 50 ohm load to the transmitter.

The Stuart Tower/Tuner is currently available in two models.

1. 40 and 80 meter model (#4080)
2. 80 and 160 meter model (#8160)

Each system comes complete with the following:

1. **TOWER TURNER MATCHING DEVICE:** This device matches nominal 50 ohm coax to the lower portion of a vertical tower, pole or other object of similar shape. RF radiation is then emitted from and received by, the entire tower-beam/quad system. The device is housed in an all aluminum box which has been sealed by mechanical means as well as a chemical sealer to provide a weatherproof enclosure. The box is then painted "communications gray" with an epoxy based paint to give a truly attractive and mar-resistant finish. All tuning shafts are rubber sealed to present an effective moisture barrier.

   All outside connections are made through technically correct hardware which is sealed by the best sealant available.

2. **MATCHING DEVICE HARDWARE:** An aluminum, horizontal support member which supports the Stuart Tower/Tuner Matching Device: and a heavily insulated stainless steel wire. The horizontal support member is made of aluminum to minimize corrosion as well as to enhance the already tidy looks of the Stuart Tower/Tuner. The Stuart Tower/Tuner matching device extends outward from the tower

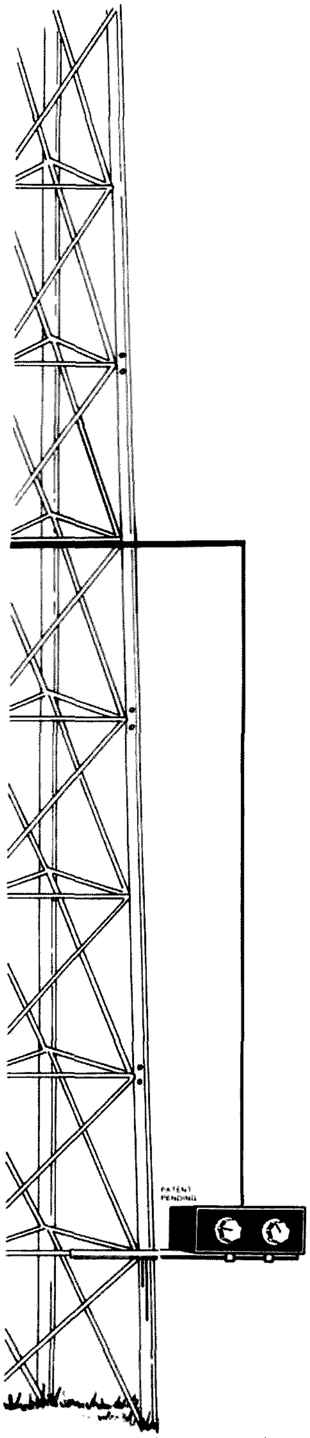

approximately 34 inches. The wire extends about 12 feet along the side of the tower.
In addition, all hardware necessary to mount the Stuart Tower/Tuner on almost any standard tower is supplied. The hardware supplied is either stainless steel or cadmium plated steel depending on the usage.

The hardware provided will accommodate mounting on either vertical or horizontal members of the tower.

NOTE: RF voltages are present on the above mentioned wire anytime this system is in use. This device should be installed with this in mind. Precautions similar to those taken with all antennas should be followed (e.g., don't grab the wire while transmitting, etc.).

The Stuart Tower/Tuner has been tested on towers from 35 to 100 feet in height supporting both beams and quads. Rotor cables and existing coaxial lines have not interfered with performance, but it is suggested that these lines should be led out of the tower at ground level.

Telescoping towers, i.e., those which extend vertically by extending successive sections of tower are completely acceptable for use with the Stuart Tower/Tuner. No modifications need be made when using this type of tower.

The system will work with grounded or ungrounded antenna towers. Normally, guy wires will not interfere with performance of the Stuart Tower/Tuner. It is suggested, however, that as with any antenna system, the guys be broken up with insulators to prevent any resonance condition.

In our testing, The Stuart Tower/Tuner has not ever required the use of a radial system at the base of the tower to give both a good SWR and excellent signal reports. However, as with any vertical antenna system, some improvement can be expected when using a counterpoise arrangement.

Tuning of the system is a simple, direct procedure.

After the apparatus is installed per the enclosed directions:

1. Install forward and reverse reading wattmeter or SWR meter of any kind between transmitter and Stuart Tower/Tuner.
2. Load transmitter at desired frequency to about 10 watts output (or enough to get reading on wattmeter).
3. Adjust tuner per directions (similar to any antenna tuner) for zero or lowest reflected reading or SWR.

Unit is now tuned to the desired frequency and the adjustments are completely repeatable.

In most cases, one setting of the tuning knobs will cover either 80 CW, 75 phone or the entire 40 meter band or the entire 160 meter band depending on which model you have with an SWR of less than 2:1.

WARRANTY

The Stuart Electronics Tower/Tuner is guaranteed for a period of one year from date of purchase. If anything goes wrong with the unit within that time, simply return the matching device to us prepaid with proof of purchase. We will take whatever steps are necessary to restore your Tower/Tuner to new specs and return it to you prepaid.

This warranty does not cover damage purposely inflicted or which results in damage or distortion of the outer cover or controls or due to using power in excess of the rated amount.

30 DAY RETURN PRIVILEGE

If the Stuart Electronic Tower/Tuner does not live up to our claim or your expectations, simply return the unit to us:

1. Within 30 days
2. Prepaid to us — preferably by United Parcel Service.
3. Not damaged, not disassembled, etc.

PLEASE NOTE: Disassembly of the Stuart Tower/Tuner not only ruins the weatherguard seal we worked so hard to give you . . . it also VOIDS this warranty and your 30 day return privilege. **RETURN THE UNIT INTACT.**

The Stuart Tower Tuner price has been reduced to $99.95 for a limited time only. Save $30 off the regular price of $129.95. Offer expires Dec. 31, 1978. Don't miss out on this fantastic offer. Order yours today.

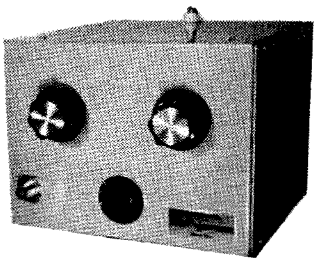

Fig. 1 Stuart Electronics 500W Tower Tuner

Name ____________________ Call ____________________

Street ____

City ______________ State ______________ Zip________

I would like to pay for this purchase by:

☐ Total Amount Enclosed

☐ No money enclosed, C.O.D.

☐ M.C. ☐ VISA # ____________ Exp. ____________

Automatic Repeater Offsets

—it's all so logical

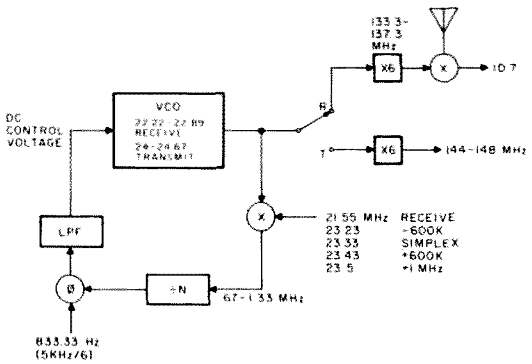

Fig. 1. Synthesizer block diagram (HW-2036).

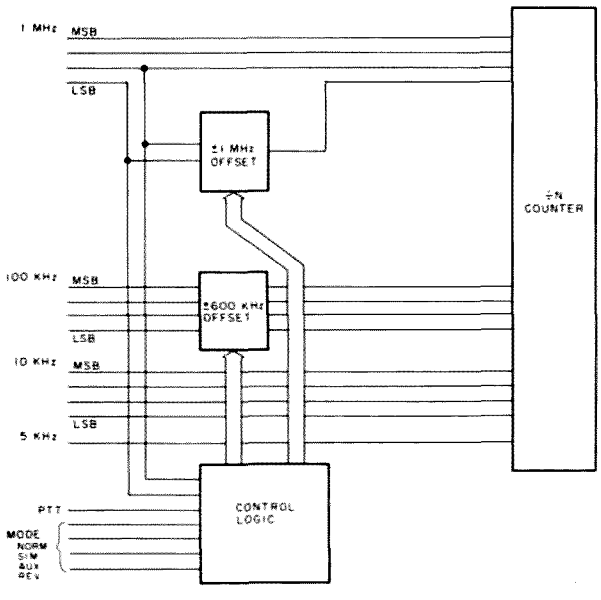

Fig. 2. Block diagram of offset circuit for 2 meters.

Bruce McNair N2YK/WB2NYK
12 Marion Avenue
Howell NJ 07731

If you either own or are contemplating adding a synthesizer to your 2 meter or 220 MHz rig, you must consider the method used to generate the frequency offset required for repeater operation. Many commercially-available transceivers and synthesizers generate this offset in a manner that does not allow for easy operating. The 2 meter offset circuit described below was originally designed to cure these problems in my HW-2036, although it could be used with most other synthesizers. After designing this circuit and talking with friends who are 220 MHz enthusiasts, the corresponding 220 MHz offset generator was an obvious alternative.

First, consider the offsets required for 2 meter operation. Depending on whether the repeater frequency is above or below 147 MHz, most repeaters require a transmitter offset of plus or minus 600 kHz from the receive frequency. There are also repeaters which use a plus or minus 1 MHz offset, and finally, simplex operation is possible from 145 to 148 MHz with zero offset.

The first thing you notice when you operate the HW-2036, or many of the other commercial rigs used on 2 meters, is that the mode switch is labeled "+600", "−600", "SIM", and "AUX". If you like to tune the band (as I do), you will find it necessary to continually switch between +600 and −600 kHz offsets as you tune from 146 to 147 MHz repeaters. This may seem to be a minor problem, but if *all* 146 MHz repeaters were using −600 kHz offsets while all 147 MHz repeaters used +600 kHz offsets, the offset could be switched with the changing of the "MHz" switch. This is the "Normal" operation in rigs such as the TS700.

While you're improving on the operation of your synthesizer, it would be convenient to be able to operate "Reverse." That is, if I were tuning 146.91 MHz receive and 146.31 trans-

mit, reverse operation would cause the rig to receive on 146.31 MHz and transmit on 146.91. There are a few instances when this capability would be helpful: (1) when the repeater is down—to talk to someone who is only crystalled up for the repeater frequency; (2) to check to see whether it is possible to switch from the repeater to a simplex frequency. As the HW-2036 (and many other rigs) was designed, to operate reverse it is necessary to offset the lever switches by 600 kHz and change from a + to a − (or vice versa) 600 kHz mode. Did you ever try to count 6 clicks on a lever switch while driving down a bumpy road, without missing too much of a transmission (or having an accident)? The design below allows you to make this change automatically by changing the mode switch one position—virtually instantaneously.

The third area for improvement is in generating ±1 MHz offsets. Many rigs offer two switch positions which select one of the two offsets. Of course, any repeater transmitting above 147 MHz will be listening below 147 MHz, and vice versa. It would be nice to generate this offset automatically and to allow reverse operation.

The final area for improvement is concerned with operation below 146 MHz. Of course, there is no repeater operation allowed from 145 to 146 MHz, but FM emission is allowed when operating simplex in this uncrowded portion of the 2 meter band. Any repeater offset circuit design would not be complete unless 145 MHz transmissions were automatically made simplex.

These then are the inconveniences associated with many 2 meter synthesized rigs in current use. Fig. 1 shows how transmit offset is generated in the HW-2036 so we can see how to change it.

Operation of Current System

For each offset used in the HW-2036, a different crystal tuned to f_{offset} is used to mix down the voltage-controlled oscillator (vco) to a range that the programmable counter can divide. If I were designing this synthesizer from the start, this would mean 5 crystals and 5 sets of discrete components to select the crystal. At an approximate cost of $10 per offset, this would work out to about $50. As it turns out, 2 will be required in either case, and 1 is supplied by the user, but still 2 extra crystals and associated components are included in the design (i.e., $20).

Now consider GLB's alternative. You have two sets of thumbwheel switches. Either can set the transmit and/or receive frequency. Reverse operation is very easy; just interchange the purpose of each switch. Any repeater offset is possible (but *are* there enough repeaters in operation with odd offsets to use this justification?). The disadvantage of this approach is that to go from one repeater to another, *both* sets of thumbwheel switches must be changed. Incidentally, GLB uses the two crystal oscillators to provide transmit and receive mixing in the loop as Heathkit does, to lower the frequency the divide-by-N counter must divide. Still, the extra thumbwheel switches cost something—probably $8 for reasonable quality switches.

The Alternative Method

The approach that I decided upon was less expensive than either of the above. This should be especially desirable if you are building your own synthesizer. The required fre-

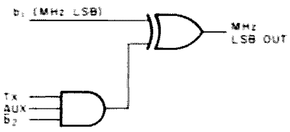

Fig. 3. ±1 MHz offset circuit.

$$
\begin{array}{rl}
0110 & (6) \\
+\,1010 & (-6) \\
\hline
(1)0000 & = 0
\end{array}
$$

carry into 5th bit (ignored)

Fig. 4. Adding 6 and −6.

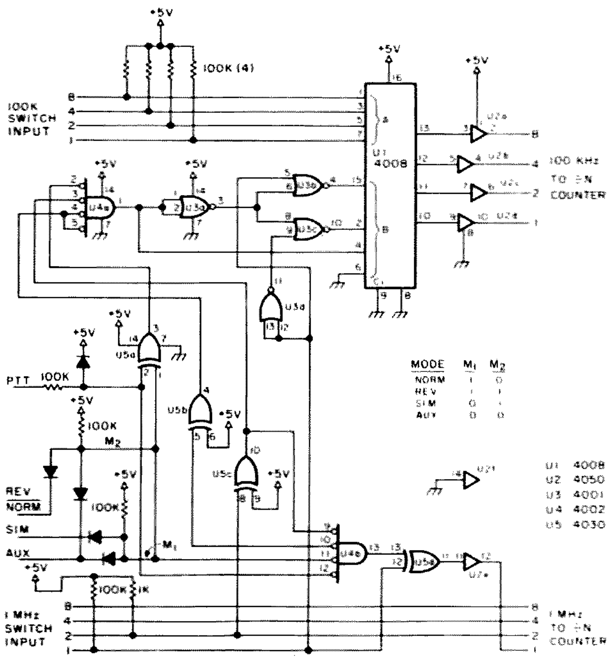

Fig. 5. 2 meter offset circuit.

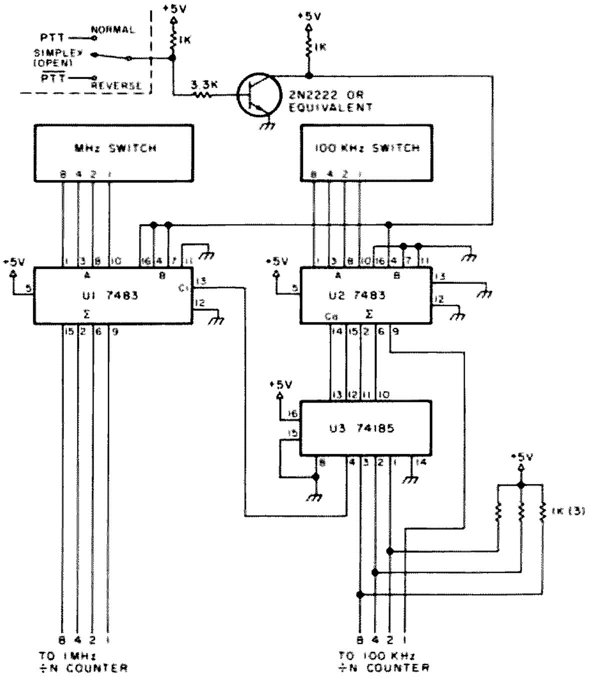

Fig. 6. 220 MHz offset circuit.

Frequency	Mode	Offset Receive	Offset Transmit
145-145.995	any	0	0 (simplex only)
146.146.995	Norm	0	-600 kHz
	Simp	0	0
	Rev	-600 kHz	0
	Aux	0	+1 MHz
147-147.995	Norm	0	+600 kHz
	Sim	0	0
	Rev	+600 kHz	0
	Aux	0	−1 MHz

Table 1.

quency offset is generated automatically by arithmetically modifying the digital input to the divide-by-N counter. When operating in the 146 MHz segment of 2 meters with a −600 kHz offset repeater, the circuit described will subtract 600 kHz from the frequency set by the BCD switches in the transmit mode. Listed in Table 2 is the offset to be used to modify the frequency selected for each band segment and mode of operation.

Now look at the block diagram of a circuit required to perform the necessary arithmetic operations. See Fig. 2. As you can see, the 10 kHz and 5 kHz lines are never changed (i.e., 146.165, 146.865) and the 100 kHz and 1 MHz lines are changed independently of each other. If you consider the states of the 1 MHz lines for 145, 146, and 147 MHz, you will see in Table 2 that b_2, the second least significant bit, tells you whether or not operation is below 146 MHz.

When $b_2 = 0$, the set frequency is from 145-145.995 MHz and there should be no offset. If $b_2 = 1$, then b_1 tells you whether 146 or 147 is selected. In fact, this is the way to generate 1 MHz offset as drawn in Fig. 3. The operation is as follows. If AUX is selected *and* the rig is transmitting *and* operation is above 146 MHz, then the least significant bit (LSB) of the MHz digit is "exclusive ORed" with 1—this has the effect of changing a 1 to a 0 and vice versa. In other words, 146 becomes 147 and 147 becomes 146, causing the 1 MHz offset on transmit. If AUX is *not* selected *or* if the rig is receiving *or* if operation is below 146 MHz, then the MHz digit is not changed. Notice that in either case, the other digits are unchanged.

Next consider the ±600 kHz offset. Note that in Table 1, for various conditions, values of ±6 have to be added to the 100 kHz input. Adding +6 is easy using a 4-bit adder chip. The input from the BCD switches is applied to one input while the binary equivalent of 6, that is 0110, is applied to the other input. Subtraction of 6 is just as easy, but it is necessary to calculate the equivalent of −6 and *add*. This is the binary code 1010. To verify this fact, add 6 (0110) to −6 (1010). The result is, in fact, zero, as shown in Fig. 4.

The Hardware

All that remains is to design the steering logic to apply the correct code to the adder to generate the proper offset.

I won't go into all the details of how this circuit is designed, but the 2 meter synthesizer offset generator is shown in Fig. 5.

Now it is time to interconnect everything and talk about the hardware used. For this project, I

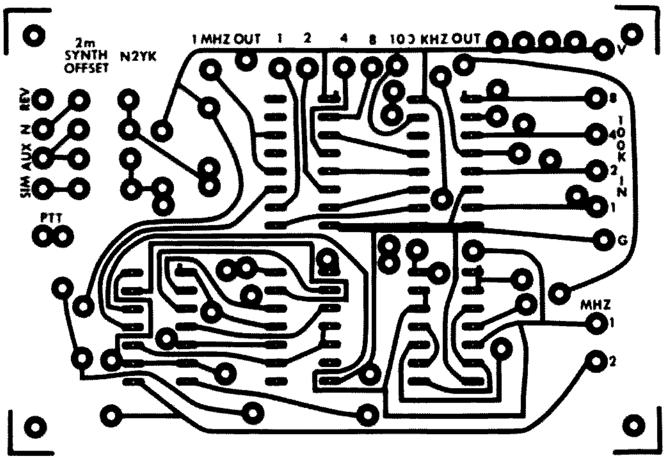

Fig. 7. PC layout for 2 meter offset circuit.

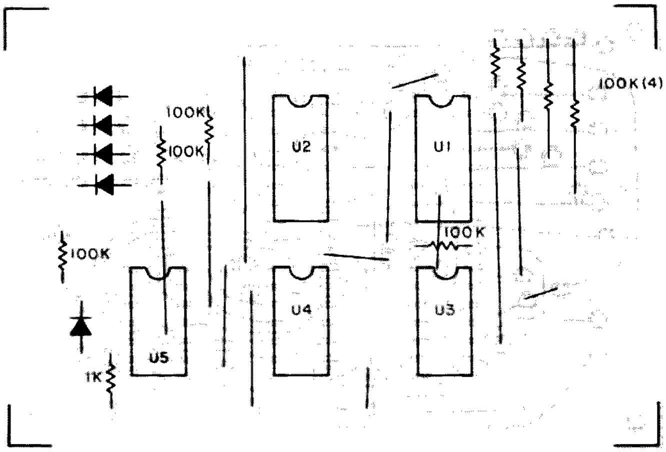

Fig. 8. Parts placement for 2 meter offset circuit.

used CMOS throughout for a number of reasons which are listed below.

- Power consumption is nearly zero. In fact, more power is used in the pull-up resistors than in the ICs.
- A 4-input NOR gate is required. CMOS 4002s are easy to get; the TTL equivalent is not.
- TTL would probably require separate power supply regulation unless you could steal a few hundred mA.
- The current prices of CMOS vs. TTL are almost comparable.

The one disadvantage of CMOS is that the 4008 adder used cannot drive TTL divide-by-N counters in the rig's synthesizer. One package is required for the 4050 that must be used. This could be eliminated, of course, if your synthesizer uses CMOS dividers.

Some explanation is in order for the mode switch. When I installed this circuit in an HW-2036, there was an existing switch labeled "−600, SIM, +600, AUX" which, on transmit, enabled the proper crystal in the offset crystal oscillator. In my HW-2036, the transmitter is now operated with the simplex always used. The mode switch is now labeled "AUX, SIM, NORM, REV" and switches a ground connection to the proper input of the offset generator board. If you follow the connections through the 4 diodes in the mode switch circuitry, you will see that the signals m_1 and m_2 take on the values shown in the table in Fig. 5.

220 MHz Circuit

After I got the circuit above installed in my 2 meter rig, it became apparent that the same idea could be used on other bands. Fortunately, the repeater offset situation is a little more reasonable on 220. A transmitter offset of −1.6 MHz appears to be the standard. Still, it would be nice to operate "normal," "simplex," and "reverse" as above. All that is necessary is to subtract 1.6 MHz from the BCD switch settings as required. The most convenient method for accomplishing this function is (1) subtract 2 from the MHz switch, (2) add 4 to the 100 kHz switch, and (3) keep track of whether it is necessary to "carry" information from one digit to the next. TTL adders (7483s) are used to perform the additions while a 74185 binary-to-BCD converter is used to keep track of carry information. It is necessary to build this circuit with TTL devices because of the 74185—there is no readily-available CMOS equivalent. The schematic of this circuit is shown in Fig. 6.

Construction

Since only dc signals are present within both of these offset generators, layout is generally not critical. Both have been built on a piece of perforated board and have been working fine for a few months. If you would rather construct the circuits on a PC board, board layouts are shown in Figs. 7 and 9, while parts placements are shown in Figs. 8 and 10. Both circuit boards as well as parts kits are available from the author. Send an SASE for details.

Installation

Both offset circuits are easily installed in the rig. You must first cut the lines from the BCD switches to the divide-by-N counters, but only in the digits that get changed. For the 2 meter version, all the 100 kHz lines are cut, but only the least significant bit (LSB) for the MHz digit. For the 220 MHz version, all lines are cut for the MHz and 100 kHz digits. Next, the proper switch lines are connected to the inputs of the offset generator. The outputs of the offset generator are now used as the inputs to the divide-by-N counters. Mode switch information is applied to the proper inputs from a new mode switch or from a modified existing switch. Finally, the push-to-talk line (which goes to ground on transmit) is connected to the proper input. If everything goes as planned, at this point you should be ready to get on the air.

Band segment	MHz code (b_8,b_4,b_2,b_1)
145	0 1 0 1
146	0 1 1 0
147	0 1 1 1

Table 2.

Conclusion

If you decide to build this circuit, I hope you find automatic repeater offset as handy as I have. If there are any questions concerning operation, installation, or modification for different rigs (or bands), I will be happy to answer any letter including an SASE. ■

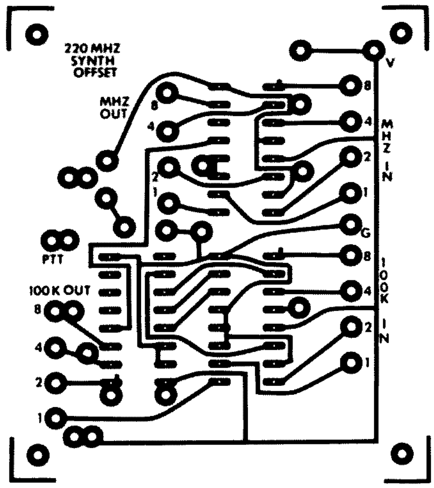

Fig. 9. PC layout for 220 MHz synthesizer offset adapter.

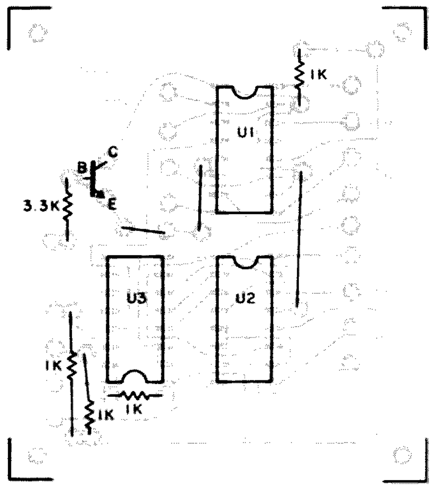

Fig. 10. Parts placement for 220 MHz synthesizer offset adapter.

Hans-Peter Baumeister DF1SP/W2
118D Windsorshire Dr.
Rochester NY 14624

CB to 10

—part XIII: the Lafayette Telsat SSB-75

This rig makes a very versatile all-mode mobile transceiver when converted to 10 meters. The price has come down remarkably from its original offering. Its basic specifications are: 23 channels, all modes (USB, LSB, AM), minimum 12 W PEP output, an i-f crystal filter, and ±600-Hz fine-tune capability. The rig has 10 crystals, which are divided into two groups for frequency synthesis: a group of six crystals in the 24-MHz range with 50-kHz spacing, and a group of 4 crystals from 14.910 MHz to 14.950 MHz. After checking the block diagrams for the different modes, I decided to replace the 24-MHz crystals. Also, the 14.950-MHz crystal should be replaced by a 14.940-MHz crystal in order to get even 10-kHz spacing from channel to channel (originally 10-10-20-10 kHz). Every crystal of the first group yields four channels on 10 meters.

The formula $f_x = f_{op} + 11.275\ \text{MHz} - 14.910\ \text{MHz}$, where f_{op} = required operating frequency in MHz, gives the frequency for the crystals in the 24-MHz range. Remember: Each of these crystals gives four operating frequencies.

Example: The frequency 28.500 MHz shall be on channel one. Which crystal is necessary? $f_x = 28.500\ \text{MHz} + 11.275\ \text{MHz} - 14.910\ \text{MHz} = 24.865\ \text{MHz}$. This crystal replaces X205 as shown in the parts location diagram, Fig. 1. This crystal is in action from channel 1 to 4 on the selector switch. X206 responds to channels 5-8; X207 to channels 9-12; X208 to 13-16; X209 to 17-20; and X210 supplies 21, 22, no operation, and 23.

If you want all 23 channels in an uninterrupted order, all you do is add 40 kHz to the previous crystal's frequency.

Example: For 28.500 to 28.730-MHz coverage, you'll need:

X205: 24.865 MHz
X206: 24.905 MHz
X207: 24.945 MHz
X208: 24.985 MHz
X209: 25.025 MHz
X210: 25.065 MHz

No operation is possible on 28.720 MHz (between channel 22 and 23) because of the switching arrangement.

If you want to listen occasionally to OSCAR 7, just use a 25.835-MHz crystal for X210. Thus, channel 23 receives the 29.502-MHz beacon, and channels 21 and 22 receive 29.480 MHz and 29.470 MHz, respectively, in the CW subband.

If you prefer the *73 Magazine* band plan (channel 1 at 28.965 MHz), you need to replace only the following crystals:

X205: 25.330 MHz
X206: 25.380 MHz
X207: 25.430 MHz
X208: 25.480 MHz
X209: 25.530 MHz
X210: 25.580 MHz

Crystal X204 remains unchanged, so delete step 1 in the following instructions. This set of crystals gives you the first 23 channels of the *73* band plan.

Some portions of the transceiver must be realigned, but the only components that must be changed are the crystals. A satisfactory alignment can

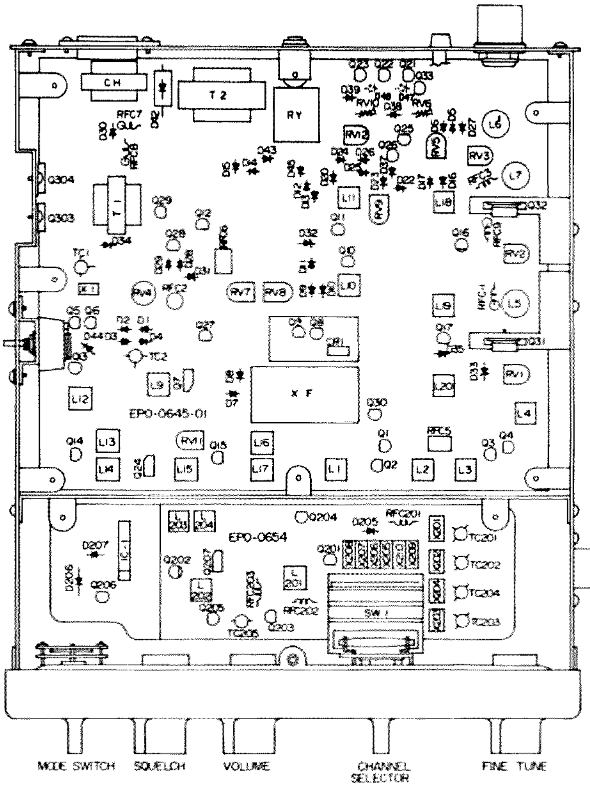

Fig. 1. Telsat SSB-75 parts location diagram.

be achieved using only a wattmeter and a 10 meter transceiver. You should have no problems if you follow these instructions.

1. Replace X204 with 14.940-MHz crystal.
2. Replace X205 through X210 as required.
3. Set mode switch to USB.
4. Plug in the microphone and turn the rig on. Turn the squelch fully counterclockwise.
5. Connect a 10 meter antenna through the wattmeter.
6. Provide a strong signal on one of the planned operating frequencies.
7. If you hear the signal already, rotate L201 clockwise until the signal disappears, and then counterclockwise until the signal returns. Continue one-half turn counterclockwise past the point of return of the signal. Go to step 9 if you were able to complete this step. If not, continue with step 8.
8. If you don't hear the signal, rotate L201 counterclockwise until you hear it, or check the frequency and strength of your reference signal. Go back to step 7.
9. Reduce the 10 meter reference signal amplitude until you barely hear it.
10. Adjust L202, L203, and L204 for best reception. Reduce reference signal level as required.
11. Adjust L18 and L19 for best reception.
12. Repeat steps 10 and 11.
13. Set mode switch to AM.
14. Press microphone push-to-talk button and adjust L2, L3, L4, L5, L7, and L6 for maximum indication on the wattmeter.
15. Repeat step 14 until power output is between 4 and 8 Watts.
16. Set mode switch to LSB.
17. Increase reference signal level until a weak signal is received. A slight frequency correction might be necessary.
18. Adjust L12 through L17 for best reference signal reception.
19. Remove reference signal and repeat steps 11 and 18 for maximum noise.

That's it! If you find it complicated—try it. It's really no problem.

The retuning was successful if there is practically no difference in noise received when you switch back and forth between USB and LSB and power output is nearly constant whether on upper or lower sideband. Better results might be obtained, however, if you have access to sophisticated test equipment.

The time required for the conversion/alignment is less than one hour.

Originally, the fine tuning control varied only the receive frequency. Soldering wire a to wire b (Fig. 2) provides fine tuning for transmit, as well.

I found this conversion very handy for strictly mobile use. For portable or fixed use, however, replacement of X201 through X204 with a 14.910-to-15.010 MHz vfo is feasible and certainly worthwhile. This will provide a 100-kHz-wide segment for each of crystals X205 through X210.

You will be surprised how often you get a DX contact with only 10 W PEP. Talking with W6s and W7s while driving around in upstate New York is "normal," and a contact with South America, the Caribbean, or even South Africa is not a rarity. Good DX! ■

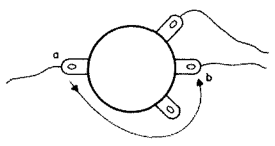

Fig. 2. Fine-tuning potentiometer.

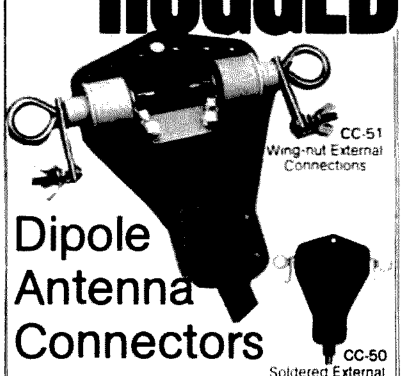

CONTESTS

from page 28

from each county activated.

AWARDS:

Certificates to top scores in each state, province, country, top 10 MO entries, and top 3 MO mobiles.

ENTRIES:

Mailing deadline for logs is December 15. Address all entries to: St. Louis ARC — KØLIR, 842 Tuxedo Blvd., Webster Groves MO 63119. Include an SASE for results.

WELLESLEY AMATEUR RADIO SOCIETY 27th ANNIVERSARY QSO PARTY

Special events station W1TKZ will be in operation for 42 hours beginning 0100 GMT November 18 and ending 1900 GMT November 19. A commemorative certificate will be awarded to those stations exchanging RS(T) and ARRL section or country with W1TKZ on phone or CW. Phone sweepstakes contest exchanges are also valid and welcomed. In order to qualify, stations must submit a completed QSL card and long SASE to Wellesley Amateur Radio Society, 324 Washington St., Wellesley Hills MA 02181 before December 31. W1TKZ will be operating on the following frequencies: phone — 3950, 7250, 14310, 21400, 28600, 146.52; CW — 3720, 7120, 21120, 28120.

ALL AUSTRIAN CONTEST
Starts: 1900 GMT
November 18
Ends: 0600 GMT
November 19

The contest is open to all amateurs; power input must be in accordance with licensing regulations. All contacts must be on 160 meters, on CW only. Foreign stations use the call "CQ OE," Austrian stations will use the call "CQ TEST." The authorized suballocations for Austria are: 1.823-1.838, 1.854-1.873, 1.873-1.900 MHz.

EXCHANGE:

RST and QSO number starting with 001. Each exchange must be confirmed by repeating the exchange code.

SCORING:

Every completely logged QSO (date, time in GMT, frequency in MHz, call of station, exchanges given and received) counts one point. Club stations OE1XMA, OE3XMS, and OE5XAM count 10 points per QSO. Multipliers are 2 points for every Austrian "Bundesland" (OE 1-9), and one point for every prefix. Multiply QSO points times multipliers for final score. Every station can be contacted only once. If a station is contacted twice, the second QSO must be clearly marked as a duplicate and does not count.

ENTRIES:

Logs must be postmarked no later than December 15 and sent to: Austrian Military Radio Section — AMRS, "AOEC 1978," c/o Dr. Ronald Eisenwagner OE5REB, Fliegerhorst Vogler, A-4063 Horsching, Austria.

INTERNATIONAL ISLAND DX CONTEST
Starts: 0001 GMT
December 2
Ends: 2400 GMT
December 3

Sponsored by the Whidbey Island amateurs with a special multiplier for QRP stations running less than 100 Watts. It is important to note that not all Islands will qualify as IDX contacts. It is necessary for every contestant to have a copy of the (IDX) Island DX List on hand in order that QSO points and multiplier credit can easily be tabulated. Enclose an SASE or 3 IRCs and write Bill Gosney WB7BFK, 2665 N. 1250 East, Oak Harbor, Whidbey Island WA 98277 for the IDX list and contest summary sheets.

Classes or operation include single- and multi-operator with single transmitters only. Mode categories include CW, phone, and mixed entries. Stations can be worked only once during the contest regardless of band or mode.

EXCHANGE:

Stations not on the IDX list give RS(T) and DXCC country. All stations on the IDX list give RS(T) and name of IDX island.

FREQUENCIES:

1805, 3555, 3715, 7055, 7115, 14055, 14155, 21055, 21155, 28055, 28155, 1825, 3815, 3895, 7215, 7285, 14215, 14285, 21315, 21385, 28515, 28585.

POINTS:

Score 10 points for each valid contact with an island listed on the IDX list which is not in your own DXCC country, 1 point for DX station contacts not on the IDX list. Count 1 multiplier point for each island shown on the IDX listing. An IDX island may be worked only once on each band for multiplier credit. Power multipliers are as follows: 500 Watts input or

Continued on page 283

Reader Service—see page 323.

Eric Shalkhauser W9CI
527 Spring Creek Road
Washington IL 61571

The History of Ham Radio

—part VII

Reprinted from QCC News, a publication of the Chicago Area Chapter of the QCWA.

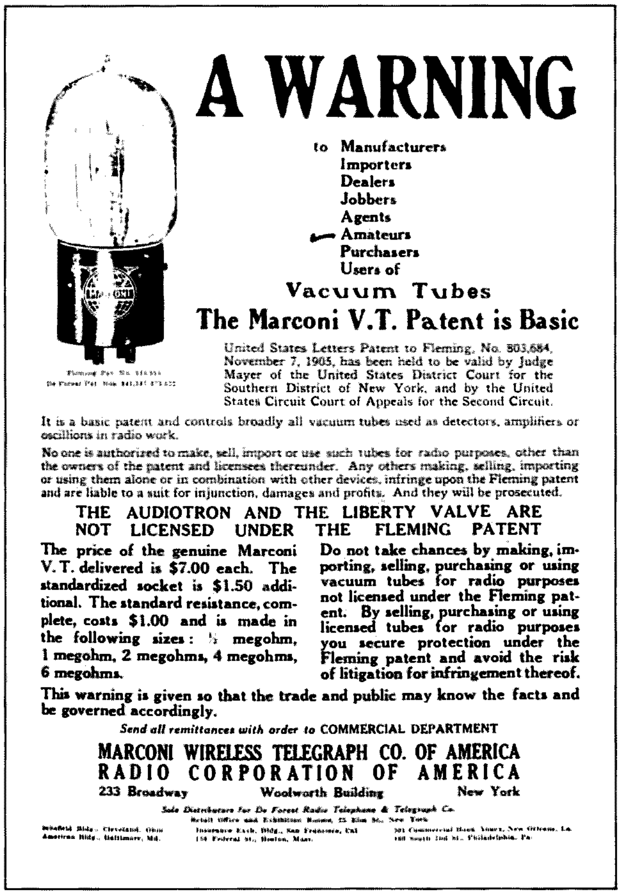

In the early 1920s, what effect did the emergence of radio broadcasting have on the amateur radio operator? Could it have been that he was directly responsible for the great popularity of this new entertainment field? Was amateur radio in some measure the instigator?

Amateur Radio Broadcasting

In 1919, Frank Conrad 8XK, one of our enthusiastic wireless amateur pioneers living in Pittsburgh, used his amateur station to entertain nearby listeners with musical renditions. He used an ordinary telephone mouthpiece as a microphone. This same station, with several modifications, went on the air as KDKA on November 2, 1920, known as the Westinghouse Pioneer Broadcaster.

Early Broadcasting

History records that, as far back as 1910 and 1911, there were voice-modulated signals heard via wireless. These emanated from early experiments with the quenched arc-gap transmitters. Dr. Lee DeForest, the well-known inventor of the triode, had a voice-modulated vacuum tube circuit in operation in his laboratory in these early years.

With wireless broadcasting ushering in a complete new mode of living for millions, the old system of dots and dashes had to give ground to modulation of the ether waves by voice and music. Normal amateur communication now had company, as the general public suddenly took a fancy to this mysterious phenomenon. Such desirable services as weather and market reports, now via wireless, became an essential part of the daily menu for listeners, especially the farmers and the country folks. A new and exciting national pastime was ushered into being.

In the fall of 1920, station KDKA announced the first nationwide election returns of the Harding-Cox presidential contest. The immediate result of the over-the-air broadcast was hundreds of requests, directed to the Department of Commerce, for broadcasting station licenses. There could be no doubt that the entertainment factor suddenly stemming from dozens of stations would take over the airwaves. Experimenters, many companies, private organizations, and even individuals vied with each other to jump in and broadcast something, just to be heard.

Licensing

In the very beginning, the Commerce Department made available three general types of license permits. These were: 9XAF—experimental, designated by an X prefix; 9YAN—institutional and

training school, a Y prefix; 9ZHB—clubs and private organizations, a Z prefix.

The assigned frequency depended somewhat on the type of program the station intended to put on the air. The department issued such licenses for only three-month periods at a time. As the number of requests to broadcast mushroomed, all licenses to broadcast had more extended periods and were designated with either a W or a K prefix.

Amateur Radio Operators as Broadcast Listeners

There was no doubt that this newly discovered scientific wonder of broadcasting via radio had the amateur wireless operator deeply involved. He was found in the forefront of all the activity. With his innate knowledge of radio's mystery, he formed the nucleus of the listening public. He was in great demand to supply the information and, what then became necessary, the receiving devices to the nonamateur public. There soon appeared the first one-tube "music box," equipped with a pair of earphones or just a single earpiece. Where distance from the transmitter was short, many early listeners used ordinary crystal detectors. The music box became an addition to the household, often replacing the phonograph and/or the piano for the evening's entertainment. Concerts, lectures, recitals, and news were there to enjoy as these events took place. Naturally, these sudden changes thrust upon an unsuspecting public brought about an almost revolutionary altered standard of living.

Major problems in the overall radio field developed because of the wavelength allocations for hundreds of domestic stations which were clamoring for space in the ether spectrum.

Toward the end of 1921, the Department of Commerce was compelled to appoint a committee to try to devise a new code of on-the-air ethics. This was an attempt to correct a situation brought about by radio phone, something which could not have been foreseen in the original established laws of 1912.

Now two important matters came up for consideration: (1) regulating amateur broadcasting, and (2) solving interference problems between amateur transmissions, commercial broadcasting, and the novice listener.

In January, 1922, Herbert Hoover, Secretary of the Commerce Department, introduced proposed radio legislation requiring all transmitting stations used for broadcasting news, concerts, lectures, and similar programs to employ limited commercial license operators at the controls and to adjust wavelengths to 360 meters, with 485 meters to be used for issuing crop reports and weather forecasts.

Although the regulations issued by the Commerce Department were only temporary, they did cause concern among radio amateurs. They felt that some of their legitimate services were being curtailed, whereas the department always recognized the great national asset of amateur activities. With the phenomenal growth of broadcasting, however, it became necessary to regulate operations before the situation got completely out of hand. It was reasoned that, as long as the general public interest was being served, broadcasting had to continue, but not merely to satisfy someone's personal amusement desire. Coupled with miserable plate supplies, some stations severely cluttered up the airwaves. Under these conditions, the amateur 200 meter band became so overloaded that amateurs were finally asked by Secretary Hoover to collaborate and collectively

RCA

RADIO CORPORATION OF AMERICA

JOINT

PROGRAM

WEEK ENDING SATURDAY, JUNE 2nd

455 WJZ METERS

and

405 WJY METERS

Radio Broadcast Central

Issued by
Information Bureau
Radio Corporation
of America
Room 1840
233 Broadway
New York City

(Daylight Saving Time)

RADIO CORPORATION OF AMERICA

STATION "WJZ"

BROADCAST CENTRAL,
AEOLIAN HALL, N. Y. CITY
455 Meters

Saturday, May 19th

3:00—Soprano Solo by Helen E. Smith
Selected Program
3:15—"Book Review," by Grace Isabel Colbron
3:30—Piano Solo by Ida Kreshefski
Four Old Dutch Songs
................*arr. by Joseph Hoffman*
"Nocturne, C Minor"................*Chopin*
"Le Coucou"................*Daquin*
3:45—Soprano Solo by Helen E. Smith
Selected Program
4:00—Piano Solo by Ida Kreshefski
"Scotch Poem"................*McDowell*
"Military Polonaise"................*Chopin*
4:15—Soprano Solo by Miss H. Rennyson
"The Star'................*Rogers*
"At Dawning"................*Cadman*
"One Fleeting Hour"................*Lee*
"Love Is a Bubble"................*Allitsen*
4:30—Violin Solo by Miss Ruby McDonald
Selected Program
4:45—Soprano Solo by Miss Helen Rennyson
"Bitterness of Love"................*Dunn*
"Believe Me if All Those Endearing Young Charms"................
"Sonny Boy"................*Curran*
5:00—Violin Solo by Miss Ruby McDonald
6:00—Uncle Wiggley's Bedtime Stories
7:30—Soprano Solo by Mme. Jaillet
7:45—Fashion Talk by Harper's Bazar
8:00—Joint recital by Mme. Cecil Arden, Mezzo-Soprano, of the Metropolitan Opera, and Miss Carolyn Beebe, pianist, of the New York Chamber of Music Society.
9:00—Army Night Program
"Invincible Fidelity" (March)..*Fratternach*
"Isle of Beauty" (Overture)......*Bernard*
"The Commodore Polka"........*Chambers*
Cornet Solo by Staff Sergeant Herbert F. Davis
"Vera" (Waltz)................*Lithgow*
"Robin Hood" (Selection)......*De Koven*
"Salute to Dixie" (March)....*Fratternach*
(All numbers not otherwise noted by the Band of the 62nd Artillery, A. A.)

come up with suggestions of their own for regulating the traffic in their own bailiwick. The understanding was clear to all. Between the telegraph and the phone, one necessarily must be subservient to the other. There was grave fear that the parting of the ways for amateur operation was imminent.

The First National Radio Conference

When the First National Radio Conference was called in Washington on February 27 to March 2, 1922, there was common agreement among all concerned in the final report that was issued: no more phone broadcasts by amateurs.

Although this verdict set certain amateur stations somewhat aback, they did come away from the sessions with a recommended wave assignment extended to a range between 150 and 275 meters. At the conference, an amateur was henceforth defined as follows:

> "An amateur is one who operates a radio station transmitting or receiving or both without pay or commercial gain, merely for personal interest or in connection with an organization of like interest."

Amateur Phone Vs. CW

How did all this change affect the amateur who had used the ether as his own domain for so many years? There was no way in which he could escape this "invasion" of his accustomed privacy. An unavoidable controversy soon developed among the CW and the phone hams. Without customary cooperation, it was recognized that the ether waves were loaded with interference of a new kind. How could the relation between the amateur phone operator and the dot and dash proponent avoid a serious break in the internal ranks, a situation which was evidenced in some *QST* correspondence between the older dyed-in-the-wool amateurs and the newcomers?

Added to this internal trouble of radio phone vs. code men, wireless had to come to grips with yet another problem, namely, citizen radio as distinquished from amateur radio. Would you believe that *QST* used its front cover page to designate its monthly magazine as follows: devoted exclusively to *citizen* radio (August, 1922); and the following month it came up with: devoted exclusively to *amateur* radio (September, 1922)? Typical amateur radio stood at the crossroads for a time.

To minimize chaotic interference, all phone broadcasts, those operating on virtually the same wavelength as the code stations, soon discovered that they were jamming each other unmercifully. What was pleasure turned into bedlam. All early courtesies of the ether waves, which had become recognized, were discarded and forgotten. To the technician who operated on phone, the code man was visualized as an ignorant brass-pounder. Among the old-time CW amateurs, it was suggested that the phone man join a radio club or visit another station and observe what was going on among us "amateurs."

The Need for Order

By the fall of 1921, the radio telephone had heavy competition. There was the commercial broadcaster, the amateur broadcaster, the code man, and the many thousand helpless novice listeners. The various problems that developed were rapidly becoming more serious to amateur radio. Also apparent to everyone was the sudden upheaval in the transgression of existing legislation to control transmitters. For a number of years, no consideration had been given toward initiating revisions in the old 1912 law.

At the conclusion of the conference, all amateurs were informed that, effective immediately, a silent period must be observed from 8:00 to 10:30 pm daily and during Sunday morning church services. The First National Radio Conference placed commercial broadcasting into the 310 to 435 meter range. The amateur was not only assured his existence, but also came out ahead in the assigned wave-band territory in which he could operate. He was asked to so divide his newly designated territory to the satisfaction of all concerned.

The radio conference in Washington was well attended by all parties affected and served to allay a number of conflicts. The regulations proposed were only recommendations to be observed between many interests. All realized that this was no binding law, albeit it was a hope that all would cooperate. In an attempt to approve wavelengths, however, the allocations came to naught because the military interests still dominated the deliberations and a tentative international agreement drawn up was promptly repudiated.

Proliferation of Broadcasting Stations

By April, 1922, there were 60 large and powerful broadcasting stations operating on the air, with approximately 500 applications for broadcast licenses pending. Such proliferation of signals emanating from so many stations in the assigned operating spectra, with no binding assigned frequencies, proved chaotic. More hearings were scheduled by the secretary, but, since recommendations did not carry legality, there could be no enforcement, so agreements were not respected.

The amateurs at the conference heard plenty of discussions about giving up spark transmitters altogether in order to alleviate interference. CW had come into its own in many stations. Just one paramount drawback, however, slowed the changeovers. The cost of the higher-power tubes for conversion necessary to compete with the power output of the spark was still a factor. New power supplies required a new approach to deliver a signal. Such costs put a decided crimp into the ham's pocketbook. The time was not ripe for abolishing one system for the other, as much as this was desirable. Patent litigations among the larger companies and corporations hindered many developments in equipment and accessory components, especially in the vacuum tube area, where competition for manufacturing rights was especially keen.

By now, there were approximately 14,000 licensed amateurs in the United States. The American Radio Relay League made a request at one of the regional conventions to lend a helping hand to the many broadcast listeners, who, like the farmer, his family, the grocer, and the banker, had no knowledge of adjusting even the simplest receiver. The receivers available on the limited market in many instances were still so primitive and crudely constructed that selectivity was impossible to attain, making elimination of in-

GEOGRAPHICAL LIST OF BROADCASTING STATIONS
Aug. 11, 1922
(See Alphabetical List for details)

City	Stations
Alabama	
Birmingham	WIAG, WSY
Mobile	WEAP
Arizona	
Phoenix	KDYW, KFAD
Tucson	KDZA
Arkansas	
Fort Smith	WCAC, WGAR
Little Rock	WCAV, WEAX, WSV
Pine Bluff	WOK
California	
Altadena	KGO
Bakersfield	KDZB, KYI
Berkeley	KQI, KRE
Del Monte	KLN
El Monte	KUY
Eureka	KNI
Fresno	KDZH, KMJ
Glendale	KFAC
Hanford	KFBD
Hollywood	KFAR
Long Beach	KSS
Los Altos	KLP
Los Angeles	KDZD, KDZF, KDZP, KFI, KHJ, KJC, KJS, KNN, KNR, KNV, KNX, KOG, KUS, KWH, KXS, KYJ, KZI
Modesto	KOQ, KXD
Oakland	KLS, KLX, KZM, KZY, KLB
Pomona	KGF
Reedley	KMC
Sacramento	KVQ
San Diego	KDPT, KDYM, KDYO, KFBC, KON, KYF
San Francisco	KDN, KDZG, KDZW, KDZX, KPO, KSL, KDO, KYY
San Jose	KFAQ, KQW
San Luis Obispo	KFBE
Santa Ana	KFAW
Stockton	KJQ, KWG
Sunnyvale	KJJ
Venice	KFAV
Colorado	
Boulder	KFAJ
Colorado Springs	KHD
Denver	KDZQ, KFAF, KLZ, KOA
Connecticut	
Greenwich	WAAQ
Hartford	WDAK
New Haven	WCJ, WGAH
Delaware	
Wilmington	WHAV
District of Columbia	
Washington	WDM, WEAS, WHAQ, WIAY, WIL, WJH, WMU, WPM
Florida	
Jacksonville	WCAN, WDAL
Miami	WFAW, WIAZ
Pensacola	WGAN
Tampa	WDAE, WEAT, WHAW
Georgia	
Atlanta	WDAW, WSB
College Park	WDAJ
Decatur	WAAS
Macon	WGAK
Savannah	WGAV, WHAO
Hawaii	
Honolulu	KDYX, KGU
Idaho	
Boise	KFAU
Lewiston	KFBA
Moscow	KFAN
Illinois	
Chicago	KYW, WAAF, WBU, WDAP, WGAS, WGU
Decatur	WBAO, WCAP, WHAP
Peoria	WBAE, WFAP, WJAN
Quincy	WCAW, WCAZ
Rockford	WIAB, WJAH
Springfield	WDAC
Tuscola	WDZ
Urbana	WRM
Indiana	
Anderson	WEAW
Fort Wayne	WFAS
Huntington	WHAY
Indianapolis	WLK, WOH
Marion	WIAQ
Muncie	WJAF
Richmond	WOZ
South Bend	WBAQ, WGAZ
Terre Haute	WEAQ
West Lafayette	WBAA
Iowa	
Ames	WOI
Burlington	WIAS
Cedar Rapids	WJAM, WKAA
Centerville	WDAX
Davenport	WHAI, WOC
Des Moines	WGF
Fort Dodge	WEAB
Iowa City	WHAA
Le Mars	WIAU
Newton	WIAH
Shenandoah	WOAJ
Sioux City	WEAU, WHAR
Vinton	WIAE
Waterloo	WEAZ, WHAC
Kansas	
Anthony	WBL
Atwood	WEAD
El Dorado	WAH
Emporia	WAAZ
Independence	WFAY
Lindsborg	WDAD
Manhattan	WTG
Salina	WFAD
Topeka	WJAQ
Wichita	WAAP, WEAH, WEY, WHAN, WKAF
Kentucky	
Louisville	WHAS
Paducah	WIAR
Louisiana	
New Orleans	WAAB, WAAC, WBAM, WCAG, WGV, WIAF, WWL
Shreveport	WAAG, WDAN, WGAQ
Maine	
Auburn	WMB

Copyright 1922, by Lefax, Phila., Pa.

GEOGRAPHICAL LIST OF BROADCASTING STATIONS
Aug. 11, 1922
(See Alphabetical List for details)

City	Stations
Portland	WJAL
Sanford	WFAR
Maryland	
Baltimore	WCAO, WEAR, WKC
Massachusetts	
Boston	WAAJ, WFAU
Holyoke	WHAX
Medford Hillside	WGI
New Bedford	WDAU
Springfield	WBZ, WIAP
Worcester	WCN, WDAS, WDAT
Michigan	
Bay City	WTP
Dearborn	WWI
Detroit	KOP, WCX, WWJ
East Lansing	WHW
Flint	WEAA
Lansing	WHAL
Saginaw	WIAW
Minnesota	
Duluth	WJAP
Hutchinson	WFAN
Minneapolis	WAAL, WBAD, WBAH, WCAS, WCE, WLB
Northfield	WCAL
St. Cloud	WFAM
St. Paul	WAAH
Mississippi	
Corinth	WHAU
Missouri	
Cameron	WFAQ
Columbia	WAAN
Jefferson City	WOS
Joplin	WHAH, WJAC
Kansas City	WDAF, WHB, WOQ, WPE
Marshall	WJAT
St. Joseph	WEAK
St. Louis	KSD, WAAE, WCK, WEB, WEW
Springfield	WIAI
Tarkio	WIAT
Montana	
Butte	KFAP, KFBF
Great Falls	KDYS
Havre	KFBB
Nebraska	
Lincoln	WFAV, WOAT, WIAX, WJAB, WKAC
Norfolk	WJAG
Omaha	WAAW, WDV, WIAK, WOU
Bushville	WEAV
University Place	WCAJ
Nevada	
Reno	KDZK, KFAS
New Jersey	
Atlantic City	WHAR
Camden	WRP
Moorestown	WBAF
Newark	WAAM, WBS, WJZ, WOR
North Plainfield	WEAM
Ocean City	WIAD
Paterson	WBAN
Roselle Park	WDY
New Mexico	
Roswell	KNJ
State College	KOB
New York	
Albany	WNJ
Binghamton	WFAX, WIAV
Buffalo	WGR, WWT
Canton	WCAD
Ithaca	WEAI
Newburgh	WCAB
New York City	WBAY, WDT, WEAF, WJX, WWZ
Poughkeepsie	WFAF
Ridgewood	WHN
Rochester	WHAM, WHQ
Schenectady	WGY, WRL
Syracuse	WBAB, WDAI, WFAB
Tarrytown	WRW
Troy	WHAZ
Utica	WSL
Waterford	WFAG
North Carolina	
Asheville	WPAJ
Charlotte	WBT
North Dakota	
Fargo	WDAY
Ohio	
Akron	WOE
Athens	WAAV
Canton	WWB
Cincinnati	WAAD, WHAG, WIZ, WLW, WMH
Cleveland	KDPM, WHK
Columbus	WBAV, WCAH, WEAO
Dayton	WFO, WJAJ
Defiance	WCAQ
Granville	WJD
Hamilton	WBAU, WRK
Marietta	WBAW
New Lebanon	WPG
Norwood	WIAL
Portsmouth	WDAB
Stockdale	WJAK
Toledo	WBAJ, WHU, WJK
Wooster	WGAU
Youngstown	WAAY, WMC
Zanesville	WPL
Oklahoma	
Muskogee	WDAV
Oklahoma City	WKY
Tulsa	WEH, WGAF
Yale	WHAT
Oregon	
Eugene	KDZJ, KFAT
Hood River	KQP
Klamath Falls	KDYU
Marshfield	KFBH
Portland	KDYQ, KFAB, KOG, KGN, KGW, KQY, KYG
Pennsylvania	
Allentown	WIAN
Altoona	WGAW
Bridgeport	WBAG
Brownsville	WDAQ
Clearfield	WPI
Crafton	WAAX
East Pittsburgh	KDKA
Erie	WJT, WSX
Harrisburg	WBAK
Lancaster	WGAL
McKeesport	WIK
Philadelphia	WCAU, WDAR, WFI, WGL, WIP, WOO, WPJ
Pittsburgh	KQV, WCAE, WHAF, WJAS
Villanova	WCAM
Wilkes-Barre	WBAX
Porto Rico	
Ensenada	WGAD
Rhode Island	
E. Providence	WKAD
Edgewood	WEAG

Copyright 1922, by Lefax, Phila., Pa.

GEOGRAPHICAL LIST OF BROADCASTING STATIONS
(See Alphabetical List for details)

City	Stations
Providence	WEAN, WJAR
South Carolina	
Charleston	WFAZ
Orangeburg	WGAM
South Dakota	
Rapid City	WCAT
Sioux Falls	WFAT
Vermillion	WEAJ
Yankton	WJAU
Tennessee	
Memphis	WKN, WPO
Nashville	WDAA
Texas	
Amarillo	WDAG
Austin	WCM
Dallas	WDAO, WFAA, WRR
El Paso	WDAH
Fort Worth	WBAP, WPA
Galveston	WHAB, WIAC
Houston	WCAK, WEAY, WEV, WFAL, WGAB
Paris	WTK
Port Arthur	WFAH
San Antonio	WCAR, WJAE
Waco	WJAD, WLAJ
Utah	
Ogden	KDZL
Salt Lake City	KDYL, KDYV, KZN
Vermont	
Burlington	WCAX
Virginia	
Blacksburg	WEAE
Norfolk	WSN
Richmond	WBAZ
Washington	
Aberdeen	KNT
Bellingham	KDZR
Centralia	KDZM
Everett	KDZZ
Lacey	KGY
Pullman	KFAE
Seattle	KDZE, KDZT, KFC, KHQ, KJR, KTW, KZC
Spokane	KFZ, KOE
Tacoma	KFBG, KGB, KMO
Wenatchee	KDZI, KZV
Yakima	KFV, KQT
West Virginia	
Bluefield	WHAJ
Charleston	WAAO
Clarksburg	WHAK
Huntington	WAAR
Morgantown	WHD
Wisconsin	
Madison	WGAY, WHA
Milwaukee	WAAK, WCAY, WHAD, WIAO
Neenah	WIAJ
Superior	WFAC
Waupaca	WIAA
CANADIAN STATIONS	
Alberta	
Edmonton	CJCA
Calgary	CFAC, CHBC, CHCQ
British Columbia	
Nelson	CJCB
Vancouver	CFCB, CFYC, CHCA, CJCE, CKCD
Manitoba	
Winnipeg	CHCF, CJCG, CJNC, CKZC
New Brunswick	
St. John	CJCI, CKCR
Nova Scotia	
Halifax	CFCE, CJCS
Ontario	
Fort Frances	CFPC
Hamilton	CKOC
Iroquois Falls	CFCH
Kitchener	CJCF
London	CHCS, CJGC, CKQC
Ottawa	CHXC
Toronto	CFCA, CFTC, CHCB, CHVC, CJCD, CJCN, CJSC, CKCE
Quebec	
Montreal	CFCF, CHYC, CJBC, CKAC, CKCS
Saskatchewan	
Regina	CKCK

Copyright 1922, by Lefax, Phila., Pa.

This is a geographical list of radio stations that existed around 1922. The list is arranged alphabetically by state and also within each state.

terference out of the question. The uppermost need for simple workable receivers was at hand. Something practical to place into the hands of the folks who would become the vast audience to monitor and judge the future broadcasting programs on the air beckoned. ■

✓ Reader Service—see page 323.

Build An FM Tweaker

—simple deviation meter

Donald T. Morar W3QVZ
3663 Hipsley Mill Road
Woodbine MD 21797

The device described in this article can be used to check the deviation of an FM transmitter. It may determine how far off frequency the transmitter carrier may be, and can also be used as an rf signal source. It can also be used as an audio frequency meter used to set an audio generator to provide a reasonably accurate af input to an FM modulator.

The Circuit

An internal transistor oscillator or an external separate stable signal source may be used to supply energy to a mixer diode, a 1N82 (Fig. 1). A sampling antenna (short rod, etc.) also supplies rf pickup to the mixer diode. The audio heterodyne difference signal is amplified in a 741 op amp. The op amp will clip at about 30 mV input, thereby producing a relatively constant amplitude square wave output. This signal is applied to a diode detector via a meter and associated timing capacitors.

Since the input amplitude is constant, a change in frequency will produce a change in the waveform's average current as indicated by the meter. Three ranges are selected by S_R. Calibration is achieved by applying a known accurate audio signal to the input and trimming the capacitor values to achieve the desired meter deflection.

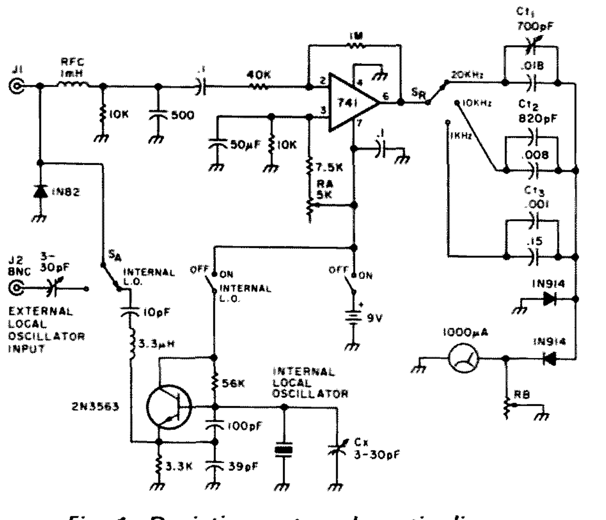

Fig. 1. Deviation meter schematic diagram.

Construction

An aluminum chassis with bottom plate (Bud AC-421 and BPA-1590) is used with cabinet dimensions of 5″ × 9½″ × 3″. A meter switch, crystal socket, external/internal source switch, and linearity control are mounted on the chassis topside, the bottom cover being used for the back of the enclosure. The internal oscillator section is built on a small piece of 2″ × 4¼″ PC board, with the balance of the circuit built on a piece of 5″ × 3″ perfboard. There is a 4″ × 2″ piece of PC board used as a shield between the oscillator and meter section (See photos). Power is provided by a 9-volt transistor radio battery held by a clamp inside the box.

Calibration and Use

Before adjusting the timing capacitors Ct_1-Ct_3, connect a scope to pin 6, the output of the op amp, and apply an audio signal to J1 until noticeable clipping occurs. Then adjust RA until equal clipping levels occur on the observed waveform. One kHz is a good compromise frequency at which to make the measurement. Check at lower and higher frequencies for symmetrical positive and negative peak clipping. Adjust the timing capacitors for all three ranges, being sure that the output of the audio signal source is sufficient to produce clipping, usually

about 30 mV input. The meter deflection should then be reasonably proportional to audio frequency input.

I added RB in parallel with the meter to act as a linearity corrector. It corrects small segments of the meter scale for improved linearity. With RB set at a maximum of 10k, the meter linearity on any range is within 5 percent. By calibrating with a known audio frequency, the range linearity can be improved to about 30 to 60 percent of full scale meter reading. I would set the audio oscillator to 5 kHz, then reduce RB to make the meter read exactly half scale (remember to have the op amp clipping). The resulting linearity between 20 and 70 percent of full scale was improved. If desired, RB may be left out altogether with no great loss of linearity.

A simple check for sufficient input amplitude, whether from an audio oscillator or frequency modulated rf source, is to see whether increasing or decreasing the input amplitude of audio or modulated rf causes an appreciable change in meter deflection. On the 20 kHz range, the meter indication must be multiplied by two. For deviation measurements, rf pickup is provided to J1. A local oscillator (LO) is then provided by an appropriate crystal plugged into the crystal socket or an external LO signal can be applied to J2 with S_A in the external position. When using an external or internal signal source, it is required that a fundamental or harmonic output equal to the transmitter frequency and of sufficient amplitude to provide a detected signal that will cause the op amp to commence clipping be used.

When the transmitter is keyed, the meter will indicate any audio beat difference in frequency between the transmitter and deviation meter LO source. Adjust C_X for a minimum reading. Any hum, noise, or alternator whine will produce a residual reading on the meter. C_X is adjusted through a hole in the chassis bottom plate. If an external LO is used, the frequency is externally adjusted at the source for the lowest meter reading on the deviation meter. Steady tone modulation can be applied to the transmitter and the deviation control adjusted as indicated on the meter. Since the deviation meter circuit responds to average current, the readings obtained with voice will tend to be characteristically lower. This is a function of the ballistics of the meter used, and is also dependent on the waveform characteristics of the particular voice used.

Even though the deviation meter is not accurately peak reading, i.e., will follow instantaneous voice peaks, error can be minimized by adjusting the modulator clipping circuitry found on most transmitters. The modulator clipping circuitry should be adjusted to just commence clipping at the desired (steady-state tone modulation input) deviation meter reading. Several transmitters may be netted by setting the deviation meter LO at the desired frequency, then adjusting the frequency of each transmitter in turn, watching for a minimum deflection of the deviation meter.

As there is sufficient LO energy present at J1, receiver LO adjustment may be effected in the same manner. Another cross-check for calibration of the deviation meter could be made with the use of Bessel nulls ($B = \Delta f/fm$). I performed this with a Heath S13-620 spectrum analyzer. The first Bessel null or zero crossing occurs at a Bessel function value of 2.3. Then, using 4 kHz as a desired deviation, $2.3 = 4.0/fm = 1.739$ kHz.

I then set my audio signal generator very accurately on 1.739 kHz. I have a method of doing this to .01 percent or better accuracy. I then increased the input to the 2 meter FM transmitter modulator, observing the spectral display on the analyzer until the carrier line nulled at the first Bessel crossing. You have now accurately produced 4 kHz deviation and the deviation meter should indicate correspondingly. If no spectrum analyzer is available, one may use a very selective receiver tuned to the center frequency of the carrier or at the center of the 2 meter receiver's i-f. The transmitter deviation is then increased until the carrier nulls. The receiver must have a selectivity position appreciably better than 3 kHz in order to resolve the carrier null. Care must also be exercised to ensure the receiver is indeed tuned to the carrier and not one of the close-in upper or lower sidebands. ■

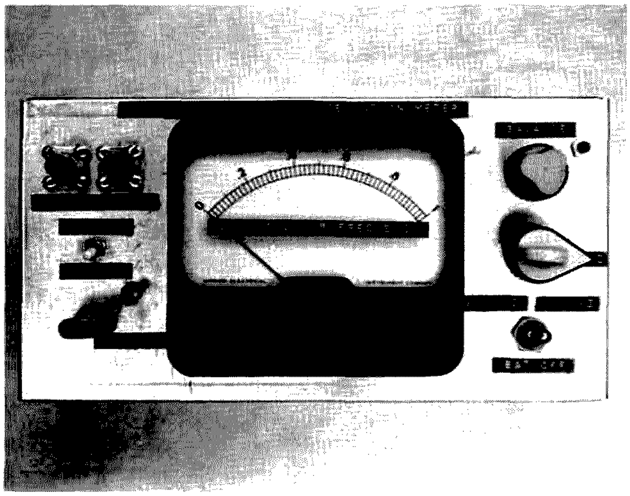

Front panel layout showing controls and functions. Control at upper right (marked Balance) was later changed to Linearity, which it is called in the text.

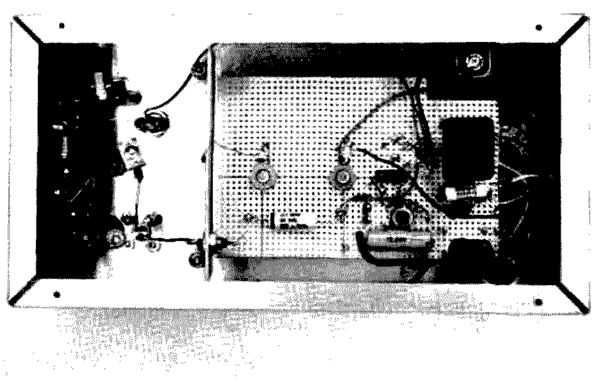

Bottom view of chassis. C_X is seen in center of chassis at far right. It should be adjusted with bottom plate installed.

Another Surplus Treasure

—convert the R-648/ARR-41 receiver

Gary McClellan
Box 2085
La Habra CA 90631

How would you like to have a general-coverage communications receiver that covers from 150 kHz to 25 MHz and features digital tuning for a bargain price?

The R-648/ARR-41 receiver has been showing up in surplus channels lately, and it has these requirements. For about $100 to $175 you get the above features and much more. Here are some other features it has: an oven-controlled crystal calibrator that generates calibration points every 250 kHz, double conversion on nearly all frequencies, switchable selectivity (via Collins mechanical filters), permeability-tuned vfo, modular construction, two rf stages, and so on. It's also easy to convert for home use, a definite boon in my opinion because that is where I do all my listening!

For years, I have been interested in SWLing, and, since few ham band transceivers cover the international shortwave bands, I have been unable to do any SWLing. Reviews in *73 Magazine* of shortwave general-coverage receivers had fired

Nov 1978

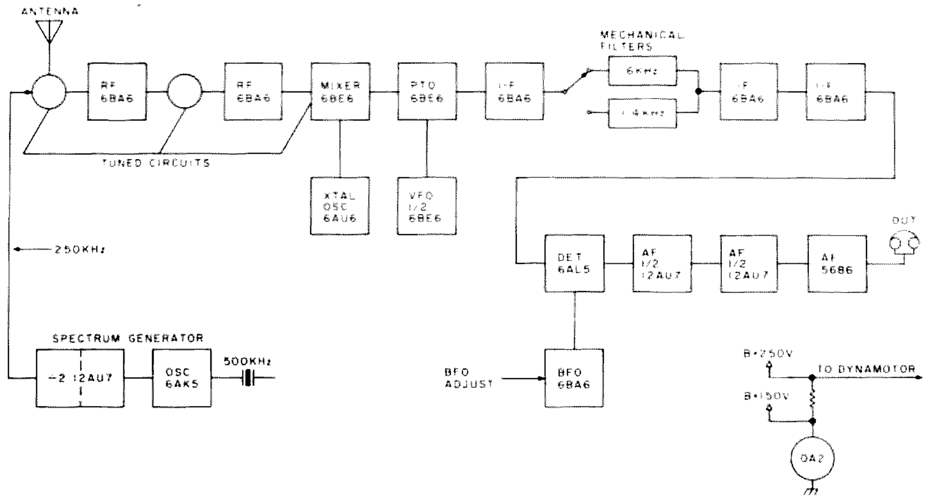

Fig. 1. Block diagram of R-648/ARR-41.

me up enough to seriously look into buying one of these units — that is, until I checked prices. So I put off buying a general-coverage receiver for a while. Then Fair Radio Sales of Lima, Ohio, started advertising the military surplus R-648 radio receiver at a price I could afford to pay. Before long, the postman was delivering a large box, and that is what led up to this article.

Naturally, the first thing I did was unpack the unit and pull the cover off, exposing the works. It's a rather hefty set by today's standards, weighing about 30 pounds, and is about the size of the old BC-348 (remember that?) aircraft receiver. My unit was built for the Navy, apparently around 1961, according to the date codes on the various parts. So it is not too old. This set has a lot of interesting features, such as essentially all parts are contained in six plug-in modules. Each module comes out simply by removing the red painted screws. Even the front end comes out. Loosen a few screws and it lifts out, mechanical tuning section and all. I might add that this set is permeability-tuned like a car radio — there are a bunch of ferrite slugs moving in and out of coils on this set. The front panel can be swung down and unplugged from the receiver, too, a decided asset because my unit had a burned-out power switch. Replacement was easy.

I purchased a schematic diagram of this set from Fair, so I could figure out what I bought and how to convert it for home use. Fig. 1 shows a block diagram of the R-648/ARR-41. Two rf stages amplify the signal from the antenna and drive a mixer stage. If I remember correctly, two rf stages are not used for gain; they isolate the antenna from the local oscillator, preventing rf signals from reaching the antenna. This could give enemy forces a signal to track with. The mixer is driven by a crystal-controlled local oscillator. This is the first signal conversion. The output signal drives a converter stage, which is housed in the permeability-tuned (PTO) vfo section. This section is tuned directly by the "Kilocycles" dial. The crystal oscillator crystals and the proper coils are selected by the "Megacycles" dial, by contrast. The PTO converter accepts signals either from the mixer stage or directly from its rf amplifiers

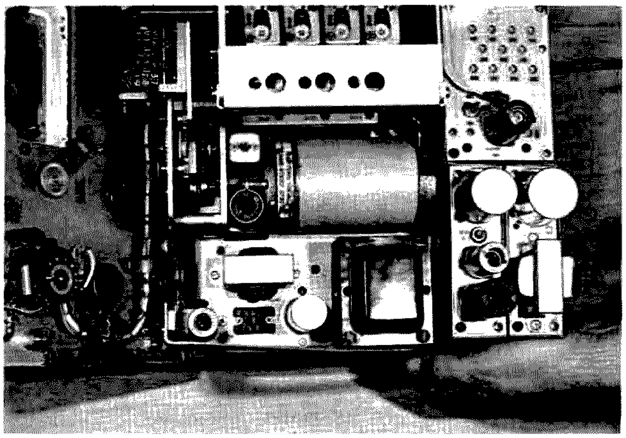

Top view again. Converted power supply is located next to hand in this picture.

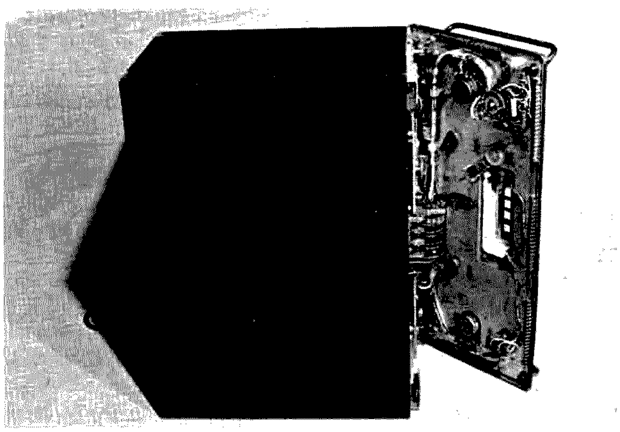

Top view of receiver. Front panel swings out and may be completely removed.

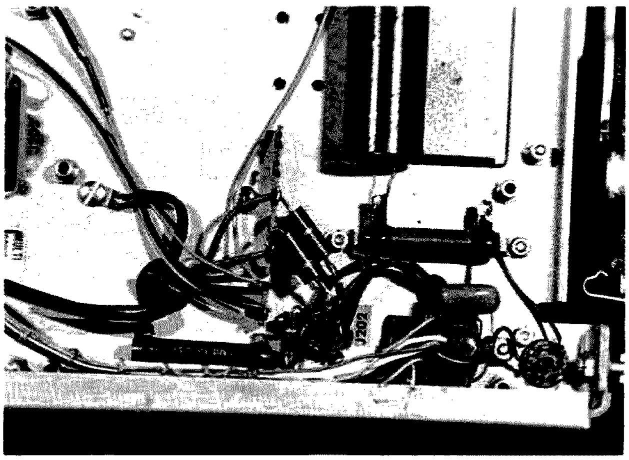

Close-up of power supply components under chassis.

on some bands. I have rather sketchy information on this part of the set, but I would guess the PTO converter runs "straight through" on the 2 to 3 MHz band. The output of the converter then drives 3 stages of i-f. In the middle of these stages, there are two Collins mechanical filters, one 6.0 kHz wide and one 1.4 kHz wide.

The 6 kHz bandwidth is too wide for most communications today, but it works fine for the A3 modulation used for international broadcasters. The 1.4 kHz filter worked okay for SSB, which was surprisingly easy to tune in on a surplus receiver (ever try an ARC-5?), but a sharper filter would be nice. The i-f frequency is 500 kHz, by the way. Following the i-f stages, there is a diode-tuned bfo (no tuning cap on the front panel), a detector, noise limiter, and avc gate. Nothing's really new here. Rounding out the set, there are three stages of audio. Surprisingly, this set suffered from the well-known "headset audio" which surplus receivers seem to be prone to. After I had the set running, I modified it for more output. There is also a crystal calibrator (which they call a "spectrum generator"). It has a 500 kHz crystal in an oven, which is divided by two for the calibration markers.

That's a quick summary of what's inside the R-648 receiver. The next step is to convert it so you can use it.

Once I had an idea of what I'd bought, I decided to clean it up a little. You might want to do the same things I did; they may save you troubleshooting later. First, I removed each of the tubes and tested them. Since all of the tubes are numbered (e.g., 5750 instead of 6BE6), you'll need the chart of Fig. 2 to convert your tubes into ones that can be tested on most tube testers. You'll probably have trouble testing the 5686 — there is no equivalent for it. I had to test mine in an industrial tube tester. As I removed each tube and tested it, my curiousity got the better of me and I removed the modules and lifted the covers. I looked for burned parts and loose hardware. This was time well spent because I found several loose ground lugs. These things take only a few hours to do, and I suggest you do the same. I'm sure they saved me troubleshooting intermittents!

I finished up with the usual stuff — I installed new dial lamps, sprayed pot cleaner on the controls and switches, and lubricated the tuning gears. If you are lucky enough to get a mint unit, you may not have to do all this. But it is easy work.

I looked into converting this unit and devised three ways. You are welcome to pick the one you like. They are arranged in the order of the amount of time they take to do, with the quickest one first.

The first method is hardly a conversion at all. You simply hang an antenna, a pair of 600-Ohm phones, and a 24-volt power source on the receiver. There is one flaw in this conversion; the dynamotor must be in place for it to work. I didn't get the dynamotor, so I couldn't try this method. Then you'll need 24 volts. Either get a 24-volt, 10-Amp power supply or two 12-volt car batteries in series. Connect the negative lead from the power supply/batteries to pins B and E on power jack J-301. Then tie the positive lead to pin D of the same jack. Plug in an antenna and headphones (stereo headphones will do in a pinch). Flip the power switch on, and you should be rewarded with a big squall from the dynamotor. A few moments later, you should get noise in the phones and then the usual SW-type stuff.

The next conversion method will probably follow after you or your wife gets tired of the racket from the dynamotor. You remove the

Type in Receiver	Standard Type Replacement
5654	6AK5
5686	No sub.
5726	6AL5
5749	6BA6
5750	6BE6
5814	12AU7

Fig. 2. This list "decodes" the numbered tubes found in the receiver.

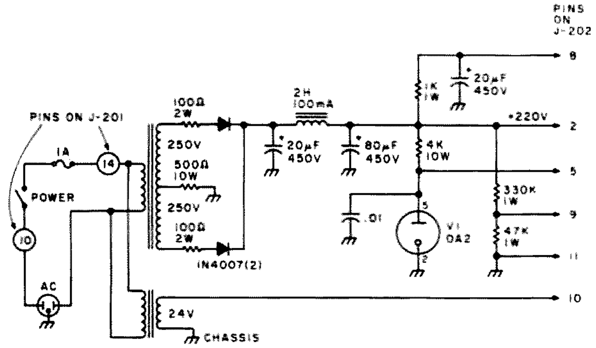

Transformer Requirements

	Minimum*		Suggested (get this one)
B+	250-0-250 volts at 70 mA	=	250-0-250 volts at 100 to 120 mA
Fil.	24 volts at 1.25 Amps	=	24 volts at 2.5 Amps
	or**		or**
	6.3 volts at 4 Amps	=	6.3 volts at 6 Amps

*This is the current the set draws.
**Used in the last conversion method only.

Fig. 3. Power supply schematic. You may have to juggle some resistor values to get the correct output voltages, but get 220 to 250 volts on the main B+ line, and you are all set.

offending dynamotor and replace it with a power supply, naturally. If you choose your parts carefully, you can mount everything in the space left by the dynamotor. Fig. 3 shows the details. The first thing you do is find a 24-volt filament transformer. The filaments draw slightly more than an Amp — about 1.25 Amps, as I recall — so you would use a 2.5-Amp transformer. The B+ supply needs 250 volts at around 70 mA; a standard receiver power transformer would work here. Since power transformers are expensive, you will probably want to scrounge for one. Another prospect is the Fair Radio model 818 transformer. It has a 500 V c-t, 80 mA winding and a 24-volt, 2-Amp winding, and it sells for $10.75. I haven't tried it in this application, but it looks small enough to fit in the dynamotor well and provide all the voltages. I followed this method using the power supply shown, and you can see my handiwork in the photos. All of the parts mount directly on the chassis, as you can see. The 0A2 tube was used as per the original circuit. You might get a 150-volt, 10-Watt zener diode and use it instead.

I found the parts at a local flea market. Someone sold me an old Bogen AM/FM tuner for a dollar, and I ended up with the necessary 500-volt c-t transformer, a filter choke of about 2 henrys, and a set of spare tubes, which is not bad for a dollar. I did have to rewire the filaments for 6.3 volts, though, but the savings was worth it. I did include a 500-Ohm, 10-Watt resistor in the center-tap lead of the transformer. This was done so the receiver would run a little cooler — the B+ fell to 220 volts.

The third modification is

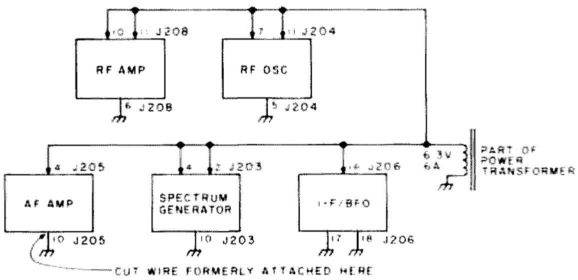

Module	Conversion	Power input
I-f bfo assembly	connect pin 3, V505 to pin 16, P-501	6.3 volts to pin 16, P501 ground pins 17 and 18, P501
Af amplifier assembly	ground pin 9, V1301	6.3 volts to pin 4, P1301 ground to pin 10, P1301
Rf oscillator assembly	no mod	6.3 volts to pin 7 or 11, P601 ground to pin 5, P601
Spectrum generator assembly	1. jumper pins 4 and 2 on P750	
	2. remove R754 (39 Ohm, 2 W)	6.3 volts to pins 4 and 2, P750
	3. ground pin 4 of V750 or pin 9 of V751	ground to pin 10, P750
Rf amplifier assembly	1. ground pin 4, V701	
	2. cut wire on pin 4, V702, then ground this wire	6.3 volts to pins 10 and 11, P701
	3. add jumper to pin 4, V702, and connect to pin 4, V703	ground to pin 6, P701
	4. jumper pins 10 and 11 of P701	

Fig. 4. Wiring data for 6.3-volt filaments.

the most ambitious of all. I used the power supply discussed before, but I rewired all of the filaments. You may not want to do this if you don't care to tinker with the converted receiver; I like to tinker and I like to be able to remove modules without worrying if other tubes' filaments will not be lit if I pull a module. In other words, this is a bit of a job. But, since I made this conversion, I have switched to a solid state audio system (contained within the audio module) and eliminated two 6AL5 tubes, cutting several Amps of current drain off the filament line. This means a cooler-running set and better stability. You can see the solid state module in the photos. The calibrator will be converted next.

Fig. 4 shows a rundown of the filament conversion to 6.3 volts. Modify the modules first and check them out by applying power to the pins listed under "power in." Then turn your attention to the main chassis and bus the pins of each module together using 16-gauge wire. This is about a two-evening job. You will then need a 6.3-volt, 5- to 6-Amp transformer, as the filaments draw about 4 Amps. It's not a job for everyone's tastes, but the flexibility may be worth it.

Now that you have done the conversion, a few improvements may be in order. The first thing you can do is change T1301, the output transformer on the audio amplifier assembly. Get a small output transformer of 14k Ohms to 8 Ohms. A small universal output transformer will do if you select the right taps. Try to mount it in place of the old square transformer if you can, but, in all likelihood, you will have to mount it on its side or make a bracket or devise some other way to make it fit. But, after it's installed, you will be able to drive a speaker to fair volume if you wish.

Another thing you will probably want to do is rewire the fuse holder and power switch on the front panel so that they control the ac power and not the filament line. Cut the leads on the power switch and splice them together. Then do the same with the fuse holder. This is so the dial lamps will continue to light. Run external wires between the fuse and power switch and the two unused connections on P-304/J201 connectors. Then run one side of your power transformer(s) to one connection, and one side of the ac cord to the other unused connection. In my unit, the pins used were 10 and 14. Oh yes, change the fuse to 1 Amp.

How well can you expect the receiver to work? It proved to be very sensitive over the tuning range. Selectivity was okay for SW but a little too broad for the crowded ham bands. Stability was quite good, and SSB stations tended to stay put for a while. In all, a successful conversion!

I will be happy to try to answer your letters, if you enclose an SASE. ■

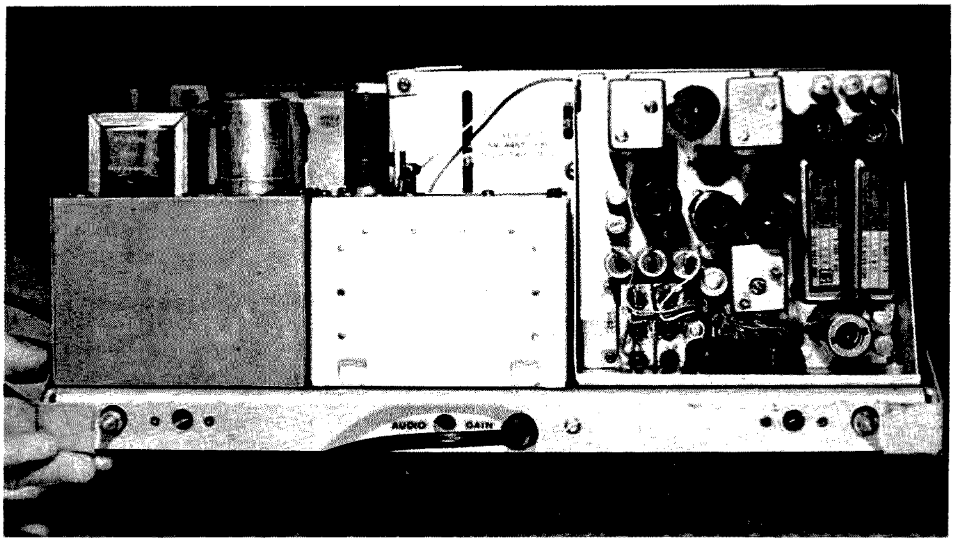

Rear view of receiver.

E. Doren WA6THG/KH6JSA
58 Manaolana Place
Hilo HI 96720

Pffft—Zapped Again!

—front-end protect your test equipment

There is some strange element that runs through my bones which upsets me terribly when my test equipment fails. Isn't it enough that some other problem has arisen to call for the test gear in the first place without finding that you have managed to vaporize the front end of that cherished frequency counter or prescaler (or worse still, that borrowed unit)?

I use a Heath IB-101 counter and its companion IB-102 prescaler and, although the input ratings of this equipment seem to be more than adequate, I find myself invariably zapping the input gates, always at the most inopportune times. The project comes to a screeching halt because I have to fix the test equipment. Of course, as Murphy's Law comes into play, we find it to be Sunday, so everything is closed. Or the salesman says on the phone, "Yeah, come on out . . . we've got plenty on the shelf." And after driving 15 miles across town, our hero discovers the salesman was slightly in error. He doesn't have any in stock. Does this sound familiar? If so, read on . . .

After finding myself in this pickle a few times, the grey matter starts working: "Why do I let these things happen to me?" or "How did I manage to cremate that front end this time?" Usually the answers are very simple. The input voltage rating of the counter or prescaler was exceeded someway, somehow. Once the smoke has cleared and the tears are dried, it no longer matters, because the project has come to a screeching halt.

Well, I gave this some serious thought and then pulled the instruction books out (remember the old adage — when all else fails, read the instructions). The specs on the prescaler show that the input sensitivity is 50 mV from 2 through 100 MHz and 125 mV from 100 through 175 MHz with a maximum input of 3 volts rms (before smoke?).

A little conservative thinking is called for here. If I want to play it really safe, yet still have a sufficient signal into the prescaler or counter for easy operation, I figure a nice happy compromise would be an input of around 300 to 500 millivolts. That should be conservative enough for anyone's book. How, then, do I accomplish this?

I generally find that in using the prescaler or counter, I'm measuring the output frequency of either my Icom 22A on two meters, or the Collins S-Line on the low bands. There are two different power levels and two different frequency ranges, also.

In zapping the front end of the test equipment, my favorite method was to couple the dummy load by way of a clip lead to the input of the counter — very cheap, very dirty, and very dangerous, friends. A little Ohm's law quickly shows that the Icom with ten Watts out develops a smart 22 volts across that 50-Ohm dummy load, and the S-line cranking 100 Watts turns out a walloping 70 volts across that same 50 Ohms. It's a small wonder that the input to the prescaler is smoking.

What was called for was some kind of voltage divider, but, in going back to Ohm's Law again, I discover that a voltage divider using resistors becomes cumbersome and somewhat expensive. Why not use capacitors?

I wanted to use commonly available units and not have to bother with any kind of variables which are expensive and difficult to mount, so I chose common, everyday,

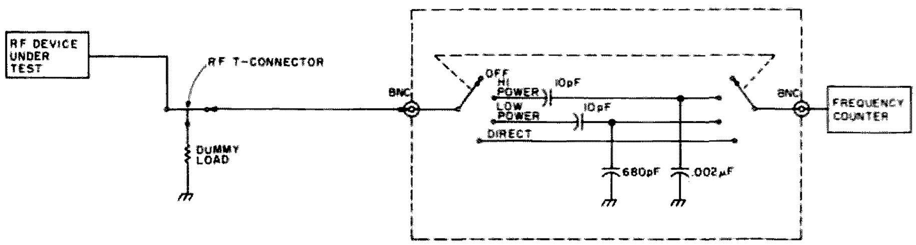

Fig. 1. All capacitors are 1000 volt disc ceramic units.

easily available disc ceramic units. Picking a number out of the air, the first value chosen was 10 pF. The books tell me that the voltage across an individual capacitor in a capacitive voltage divider is inversely proportional to its capacitance. Therefore, if I wanted 300 millivolts with 70 volts applied across the divider, the ratio was 70 divided by 0.3 or 233 to 1. If the first capacitor chosen is 10 pF, then the second capacitor must be 233 times bigger or .002 mF, using commonly available items. For the second divider, using low power of 10 Watts, the same rules apply. 10 Watts is 22 volts across 50 Ohms. Therefore, still sticking to my first 10 pF value, the second capacitor in the low power divider must be 22 divided by 0.3, giving a ratio of 73 to 1. This means the capacitor value has to be 73 times 10 pF or 730 pF. The junk box gave up a 680 pF, which I called close enough for ranch work.

The complete unit is built into a small LMB box using a double-pole double-throw wafer switch. BNC connectors were added for convenience in cabling the unit up between the dummy load and the counter. I added an "off" and a "direct" position, as shown in the diagram. It works exactly the way it's supposed to work, and, since its conception, I have had no more failures with the counter or prescaler. It later occurred to me that the capacitive reactance of two series capacitors across the dummy load could present, at 146 MHz, an swr problem. However, the calculator shows the impedance of the combination to present no more than a 1.44 to 1 swr. At frequencies below 30 MHz, it isn't worth worrying about. It does solve the problem of a convenient, safe, and conservative way of frequency measurement without the worry of test equipment failure. ■

William R. Fletcher, Jr.
2810 Riverview Drive
Fairbanks AK 99701

One Meter—Many Jobs

—an introduction to shunts

While building a power supply, I ran into a problem that I'm sure others have encountered. It involved measuring the output voltage and current of my new power supply. I had only enough room to mount one meter, and besides, I didn't want to pay the high price for two new meters. At today's prices, which run from $7.00 to $9.00 for a nice-looking meter, two meters can raise the cost of a power supply considerably. I'm sure I came up with the same solution others have, but, not having seen an article on it, I thought I would share my idea with you. My solution involves buying just one voltmeter (for the range intended) and converting it to also measure current. This not only saves space, but also money.

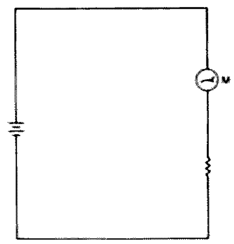

Fig. 1. A milliammeter with a series resistor makes a voltmeter.

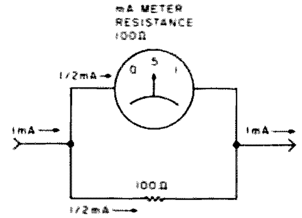

Fig. 2. Current will divide equally between the meter and its shunt.

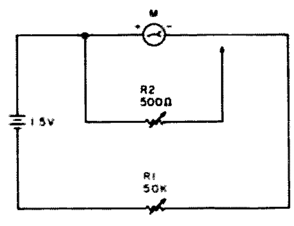

Fig. 3. This circuit can be used to determine the internal resistance of any meter.

Theory

Basically, all dc meters used in radio applications are of the same general type, which is known as the moving coil meter or the D'Arsonval meter. This type of meter can be used as a dc ammeter, milliammeter, microammeter, voltmeter, and, with rectifiers, it can also measure alternating currents and voltages. The meter movement itself is actually a sensitive instrument, usually requiring currents of 1 mA or less for full-scale deflection. You will find that a voltmeter is nothing more than one of these sensitive meters with a current-limiting resistor in series with it (see Fig. 1). Say, for example, that a meter has a full-scale deflection sensitivity of 1 mA, and you want to make it into a voltmeter with a range of 0-10 volts. You will need 1 mA of current flow (for full-scale reading) with 10 volts applied. If you connect the 10 volts directly to the meter, the only thing limiting the current is the internal resistance of the meter, which is usually less than 200 Ohms. If the 1 mA meter had 100 Ohms of resistance with 10 volts applied, the current through the meter would approach 100 mA. Needless to say, this would instantly destroy the meter. To get only 1 mA from 10 volts, you need a series or multiplier resistor to limit the current. From Ohm's Law, R = E/I, you get the value of this resistor, R = 10/.001, or 10,000 Ohms. With this resistor connected in series with the basic 0-1 mA meter, it has become a 0-10 V voltmeter.

If you want to use this same meter to measure current, it already does just that from 0-1 mA. If the coil of a 0-1 mA meter has 100 Ohms of resistance and a 100-Ohm resistor is connected across it (in shunt), half of any current flowing through this parallel circuit will pass through the resistor and half through the meter. (See Fig. 2.) In this case, if 1 mA is flowing in the circuit, ½ mA will flow through the shunt and ½ mA through the meter, giving ½-scale deflection of the meter needle. The meter will now read full scale when 2 mA flows in the circuit. To make the meter read correctly, it would be necessary to replace the 0-1 mA scale with a 0-2 mA scale. To avoid all this work, you could, by using the correct value of shunt resistance, make the scale accurate for 0-10 mA, 0-100 mA, or even 0-1 Amp. This is the basis for this article, only I'll begin with a new voltmeter for the range intended.

Conversion Details

Let's say, for example, that you want to build a power supply with a meter that can measure 0-15 V, 0-150 mA, and 0-1.5 A. First you would buy a 0-15 V voltmeter, and that's half of the problem solved right there. Start by removing from the back of the meter the two screws that hold it together. Once the screws are out, take the movement out of the case. There will still be two wires connecting the case to the movement, and one will have a resistor in series with it. Unsolder this resistor, and replace it with a piece of wire. At this point, put the meter back together, being sure to keep this resistor because it will be used later. At this time, note the value of this resistor. For most 15 V voltmeters, it will be 15,000 Ohms, meaning that the meter takes 1 mA for full-scale deflection (I-E/R = 15 V/15,000 Ohms = .001A).

The following is not absolutely necessary, but I will show you how to determine the internal resistance of a meter and the values of shunt resistors for various current readings. Start by connecting the test circuit in Fig. 3 with both potentiometers set for maximum resistance. Decrease the value of R1 until the meter reading increases to full scale. Now connect R2, and adjust it for a half-scale reading on the meter. Next remove R2 without disturbing its setting, and measure its resistance with a ohmmeter. This value is the internal resistance of the meter; in my case, it was 150

Ohms. Now, if you desire to make this 1 mA meter read 150 mA full scale, the shunt will have to carry 149 mA and the meter 1 mA. Being in parallel, the meter and the shunt will have the same voltage across them. The current in any leg of a parallel circuit is inversely proportional to the resistance. Therefore, 1/149th of 150 Ohms will be required for the shunt, or 1.0067 Ohms. Now the meter's range of 0-15 has been expanded to read 0-150 mA; 15 on the meter equals 150 mA.

If the meter is to be used to measure 1.5 A, then the shunt must be 1/1499th of 150 Ohms, or .10006 Ohms. Now the 15 on the meter equals 1.5 A.

In reality, you can't just go out and buy 1.0067-Ohm and .10006-Ohm resistors. Here is an easy way I get around this. First, find an old ceramic wire-wound resistor with a value of 1-5 Ohms. If your junk box is like mine, you will have several (see Photo A). If not, maybe an amateur friend has one to spare. Take a hammer and chip the ceramic off a little at a time, being careful not to damage the wire. Once you have all the wire, clean it until it shines with sandpaper. Now connect it in the test circuit shown in Fig. 4. Here you will be calibrating your new ammeter to an accurate one, such as in your volt ohmmeter (VOM). Start with the smallest scale you want to calibrate – in the case of 150 mA or 1.5 A, it will be the 150 mA. Choose a battery and resistor combination that will give a close-to-center reading on the 150 mA scale.

Example: With a 1.5-volt battery, use a resistor of 20 Ohms, which will make the VOM read 75 mA. Now, with the VOM reading 75 mA, slide the jumper down the wire until your new meter reads 7.5 (75 mA) or whatever your VOM reads if you didn't use a 20-Ohm resistor. Cut the wire about a half inch beyond this point; this will be the shunt for the 150 mA scale. You can use this shunt for the 1.5 A scale by tapping the correct amount of resistance from it. To do this, you would use the same procedure and wire as before, only change to a smaller load resistor. This will give more current to calibrate the larger scale of 1.5 A.

Example: Use the same test circuit as in Fig. 4, only change the load resistor to a 2-Watt, 5-Ohm resistor. The VOM will now read 300 mA, and you should slide the jumper down the 150 mA shunt wire until the new meter reads 3. Solder a wire at this point, and you will have two shunts in one. In my case, the total length of the shunt came to about a foot. You can either slide some insulation around the shunt wire or do like I did and make a plastic holder for it. Hopefully, if all went well up to this point, you have a dual shunt, the voltmeter resistor you removed, and a converted meter. All that's left to do now is to connect these according to Fig. 5. You can now measure voltage and two different ranges of current, just with a flip of a switch. ■

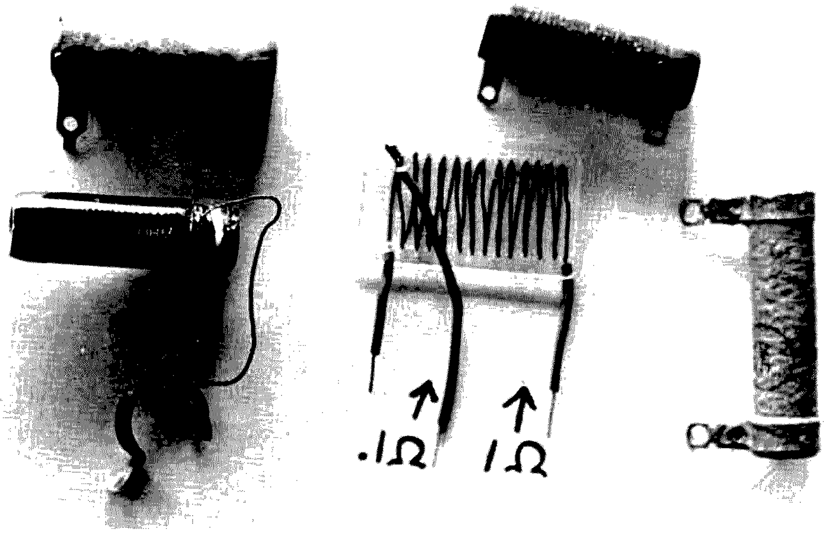

Photo A.

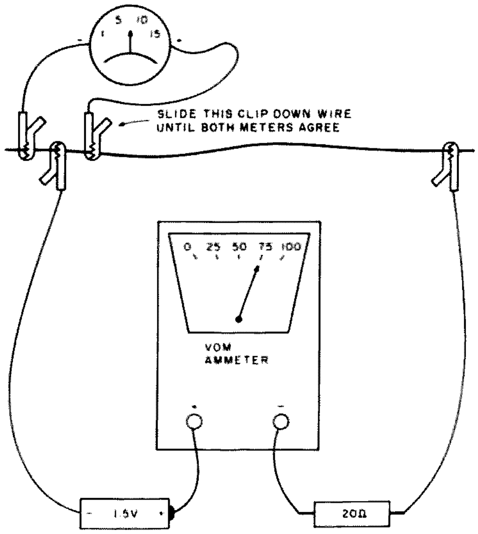

Fig. 4. The circuit used to make the shunts for ammeters.

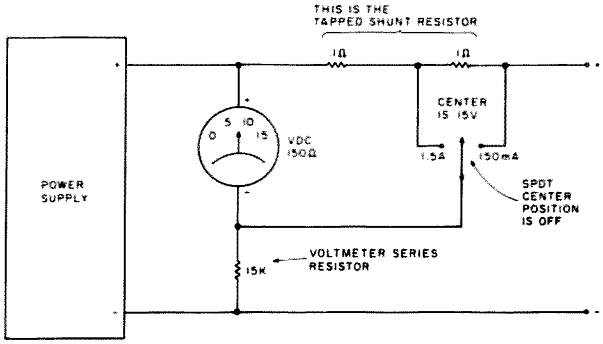

Fig. 5. The meter circuit schematic showing how to use one meter to measure voltage and two ranges of current.

Bob Thornburg WB6JPI
13135 Ventura Blvd.
Studio City CA 91604

Bill Brady WB6HDB
14639 Maryton St.
Norwalk CA 90650

Who Uses All Those Frequencies?

—the competition for radio spectrum

All amateur communication is classified as two-way radio, but this is only a small portion of the types of services that fall under this definition. Most of the services are open to the public for their use simply by showing a need to utilize the specific service (usually by filling out an application form not unlike a 610). There are no tests and no demonstrations of capability or other qualifications as to your ability to properly operate the equipment or understand the rules—simply a statement as to your need for the service. All of the equipment allowed is type-accepted by the FCC and cannot be tampered with or modified. There are approximately 36,000,000 two-way radios on the air, licensed and legal. Of this quantity, amateurs represent about 750,000, so we are small potatoes. CB is about 20 million, which leaves 15 million radios in the other services.

What are these other services? We have all heard of CB, but the other 15 million . . . what are they? Well, there are seven major services, as shown in Table 1, that make up the Safety and Special Services Group.

The actual breakdown of the 36 million radio sets is not easy to derive, but data is available on the licenses. Note that, as with an amateur's, the license issued by the FCC can cover several radio sets and in some cases several hundred sets with a simple license. The actual number of radios per license depends upon the service and the use within the service.

The majority of the two-way services are used for people talking to people: airplane to tower, boat to boat, ship to shore, cement truck to dispatcher, taxicabs, police, tow trucks, fire trucks, ambulances, delivery trucks, AAA, convoys, security, etc. On VHF/UHF, repeaters are common; on HF, intercontinental traffic is common. CW is used on some marine and aeronautical bands.

The frequencies allocated to each of these services is difficult to tabulate, as many bands are shared, particularly between the Public Safety, Industrial, and Land Transportation services. Table 2 is a breakdown of allocated spectrum. Note that Aviation has the largest spectrum allocation, mainly due to their radar bands. Also note that Public Safety, Industrial, and Land Transportation have a large UHF allocation because they share the 470-512 MHz allocation with Broadcast (UHF TV channels 14 to 20).

As can be calculated, CB has the least spectrum

Service	Licenses
Aviation	206,000
Marine	296,000
Public Safety	114,000
Industrial	318,000
Land Transportation	25,000
Citizens	10,532,000
Amateur	339,000

Table 1. Safety and Special Services. Source: "Two-Way Radio Station Count," Communications News, *August, 1977.*

	Below			
Service	**10 GHz**	**1 GHz**	**100 MHz**	**10 MHz**
Aviation	913	43	15.1	5.5
Marine	203.8	7	5.2	2.7
Public Safety	87.9	79.9	9.3	1.1
Industrial	79.1	71.1	7.51	1.31
Land Transportation	68.6	60.6	2.37	-0-
Citizens	.98	.98	.58	-0-
Amateur	756	46.45	7.45	1.0

Table 2. Breakdown of spectrum. Source: Vol. II, Part 2, Frequency Allocations and Radio Treaty Matters; General Rules and Regulations; FCC Rules and Regulations, Sept., 1972, edition through Transmittal Sheet 9.

(below 10,000 MHz) per license and Aviation the most. Below 1,000 MHz, Land Transportation has the most, but below 10 MHz, Aviation once again has more.

CB and Amateur are familiar to you, but what are the others? Aviation and Marine are obvious; they have to do with the communications relating to these fields, but what are the other three services?

Public Safety includes police, fire, local government, highway maintenance, forestry conservation, special emergency, state Guard, and fixed public safety services. Of the 114,000 licenses, 35,000 are police and 26,000 are local government.

Industrial services include business, power, petroleum, manufacturers, forest products, special industrial, industrial radio location, motion picture, relay press, telephone maintenance, and fixed industrial services. Of the 318,000 licenses, 212,000 are business.

Land Transportation services include railroad, taxicab, automobile emergency, buses, trucks, and fixed transportation services. Of the 25,000 licenses, 9,000 are railroads and 4,000 are taxicabs.

CB is the fastest growing service, having doubled several times in the last few years. The principal utilization of CB and the primary reason for this growth is due to the effectivity of mobile communication for the traveler. It would appear to me that the crowding and necessary expansion of spectrum for this service should come from the Land Transportation service, in contrast to the publicly discussed encroachment on the amateur bands. ■

MDS: What Is It?

—and what's in it for you

James Edwards
c/o 73 Magazine

If you've been to a large hotel or motel recently, there's a good chance that, for a few dollars, you had the option of seeing a current movie on your room television set. Although some places have been providing this entertainment via in-house video tape players, most are now receiving signals from a central location using the Multipoint Distribution Service (MDS).

First authorized by the FCC in July of 1970, MDS stations offer a low-cost common carrier service. MDS stations actually transmit over the air the movies and other programs to hotels and apartment complexes. (Beginning to sound interesting?)

Technical Details

MDS stations transmit a standard television signal in an omnidirectional pattern on one of two channels in the band from 2150 to 2162 MHz. "Two gigahertz—that's S-band microwave! I thought that was only good for point-to-point with big dishes, big signals, etc." Well, there's no rule that says microwave *has* to be in one direction. In fact, MDS usually has a 360° omnidirectional transmit antenna located on one of the highest buildings in town. (Next time you're checking out your repeater's antenna, watch for a strange antenna that looks like a piece of sewer pipe with a funnel on top of it. If it has a cable running to it, it's probably the MDS transmit antenna.) The antennas are usually 10-dB gain jobs with 10 Watts running into them. That gives a 100-Watt erp radiated signal. In some cases, the FCC may authorize 100 Watts into the antenna for a 1000-Watt erp signal.

Receive stations are 2-foot or 4-foot dish antennas with a down-converter mounted on the back. A two-foot dish has about 20 dB gain at 2 GHz, so reliable range is about a 20-mile radius from the transmitter. The converter changes the MDS signal to an unused TV channel and feeds it into the hotel or apartment television distribution system.

Programs

Strictly speaking, an MDS facility is a common carrier and has no control or interest in program content. A program syndicator contracts with the MDS owner and the hotels and apartment complexes to provide recent theater movies. These are uncut movies, with no commercials (sometimes "X" or "R" rated). Blacked-out or special sporting events and rock concerts are sometimes broadcast.

One movie per night with a matinee on the weekend is the usual schedule. Movies are repeated on varying nights, so you can expect about 10-15 new shows per month. During the daytime, the system is sometimes used by large multi-branch organizations (banks, schools, etc.) that want to distribute training and sales programs to a number of locations in a metropolitan area. City government and police departments are also daytime users in some areas.

"Star Wars" in Your Living Room?

If your city has an MDS system (check with one of the larger motels) and you can "see" the transmitting antenna, you can probably receive the movies in your home. The signal is a standard NTSC color picture transmitted "inverted"—that is, the picture carrier is above the sound carrier. The picture carrier (for MDS "Channel One") is 2154.75 MHz. High-side injection will re-invert the signal for reception on an unused channel on your set. A simple diode mixer (like a UHF tuner) followed by a low-noise preamp is effective in many cases. Dish antennas are rather expensive, but a UHF TV dish can be converted to receive the higher frequencies. Mounting the converter at the dish and feeding power to it reduces feedline losses to almost zero.

Business Opportunity

You could use the information presented here to provide first-run movies in your home. However, you might want to investigate MDS from a business standpoint. The Multipoint Distribution Service is somewhat of a "monopoly" in a given area and an FCC license could prove very valuable. If your city doesn't have an MDS system, check out the FCC Rules, subpart K, paragraph 21.900. ■

FM Calibration on a Budget

—why pay more?

James C. Chapel W9HDA
2349 Wiggins Avenue
Springfield IL 62704

With the strong trend to FM equipment on the VHF and UHF bands, the need for FM signal generators has grown in recent months. FM transmitter deviation (similar to AM modulation) must be set high enough so that the audio has some punch, but not set so high that the receiver on the other end cannot even detect the audio. The correct alignment of FM receivers is also critical—especially the detector stage. Thus, the deviation of a signal generator or transmitter should be accurately known.

This article covers a simple method of calibrating or checking the calibration of FM signal generators, whether the generator is home brew, such as in this author's article in the January, 1978, issue of *73*, purchased as war surplus, or obtained from the commercial market. It will also show how to directly check the deviation of an existing FM transmitter. The easiest way, if you have the cash, is to hire someone to calibrate your generator or transmitter or even buy a commercial unit already calibrated. If you do not have the cash or would rather put the money into the rig instead of calibration services, this article is for you.

Basics

This calibration method is based on the characteristics of FM signals with various levels of deviation (modulation) applied. Unlike AM, FM has several (and can have dozens of) sidebands removed at fixed intervals from the carrier frequency. If an FM signal consisted of a single 1000 Hz audio frequency modulating the carrier, there would be sidebands at 1000 Hz on each side of the carrier frequency. Sidebands would also occur at 2,000, 3,000, 4,000, and 5,000 Hz, and even higher on both sides of the carrier, depending upon the deviation level. The magnitude of these sidebands and the carrier varies in a definite relationship with the magnitude of the audio signal. In other words, the carrier and all the sideband *amplitudes* vary as the deviation is increased or decreased. Most important is the fact that the carrier magnitude actually goes to zero at certain levels of deviation. By making use of this last fact, a crystal filter, and a mathematical concept called Bessel Functions, it is possible to accurately measure the amount of level of deviation of a signal.

Bessel Functions are very complex multi-dimensional functions which, when graphed, look like a series of ocean waves rolling onto the beach. The important thing is that the functions *define* the sideband, carrier, audio frequency, and deviation relationships. Using these mathematical functions, it has been determined that with a single 1,000 Hz audio signal, the carrier goes to zero at about a deviation of 2.4 kHz. The carrier also goes to zero again at about 5.5 kHz as the audio level is further increased. Fig. 1 shows a carrier with sidebands each spaced 1 kHz (the audio frequency) away from the carrier or adjacent sideband. Similarly, Fig. 2 shows the sidebands and missing carrier at null. Since the point at which the carrier disappears is accurately known by mathematical relationships, it is easy to accurately determine the deviation calibration points.

In order to tell when the carrier has disappeared, it is necessary to use a frequency selective device which allows only the carrier frequency to pass, and eliminates the several sidebands. A single-crystal filter cut to the same frequency as the carrier fre-

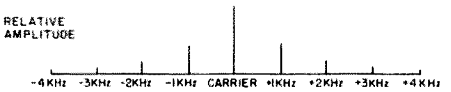

Fig. 1. Carrier and sidebands for 1 kHz single-tone modulation (not at carrier null).

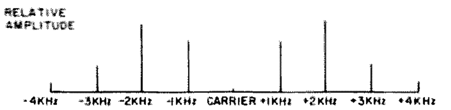

Fig. 2. Carrier and sidebands for 1 kHz single-tone modulation of carrier null.

quency appears in the receiver will accomplish the job. When the signal goes to null or approaches zero, the deviation level at that point is known.

Equipment

In order to accurately measure the deviation, a good receiver, a scope or ac VTVM, and the crystal filter are required. The FM generator under test is applied to the antenna input or i-f input at the proper frequency. The scope or meter is connected to the output of the filter. Fig. 3 shows the crystal filter circuit for a 455 kHz receiver i-f. The filter is connected to the last limiter stage before the detector. In the case of the popular quadrature detector, this must be the pin that is the input to the actual detector portion of the IC. In the case of an older transistorized receiver, it should be the output of the last transistor limiter stage.

Procedure

Allow all equipment to warm up for several minutes—especially if any is of vacuum-tube vintage. Apply the carrier only to the receiver input and tune the generator until a reading is observed on the filter output. Adjust the generator frequency so that the output is maximum and is, therefore, centered on the crystal filter frequency. Apply a 1,000 Hz audio signal by slowly increasing the deviation control on the generator. The crystal filter output should suddenly drop to near zero. This is the first null and, for a 1,000 Hz audio signal, represents a 2.4 kHz deviation. Continuing to increase the deviation will result in a second drop or null, not as sharp or pronounced. This, the second null, represents a 5.5 kHz deviation. A third null occurs at 8.7 kHz. This is the range required for most ham radio equipment today. Two tables are provided to make it easy to calculate any of the three nulls, based on either a fixed known audio frequency or the frequency required to produce a desired deviation (Table 1 and Table 2 respectively).

Examples of Calibration

1. Using the author's home brew FM generator

In order to calibrate this generator, the output must be applied to the 455 kHz i-f strip of a receiver. The crystal filter is then connected to the last limiter stage and the scope to the filter output. The output frequency of the generator is adjusted so that it is exactly centered in the crystal filter. Since the audio frequency of this generator is about 1,000 Hz, Table 1 shows that nulls will occur at 2.4, 5.5, and 8.7 kHz. The deviation level is slowly advanced until each null is observed, and the position of the deviation control is so marked. Once these points have been determined, intermediate points can be estimated.

2. Using a military-type generator (such as the SG-3)

The output of the SG-3 FM generator is applied to the input of a 2-meter receiver. Filter and scope are connected as described earlier. The generator, with no deviation applied, is tuned until output from

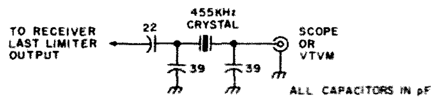

Fig. 3. Crystal filter used to detect carrier null.

the filter is obtained. This adjustment will be very critical, especially on a selective receiver, since the tuning has to be better than 1 kHz. An external audio generator is applied to the signal generator and the switch set to the external audio position. The frequency is set to 2,080 Hz, which provides a 5 kHz deviation on the first null. Increase the deviation until the null is observed. The deviation calibration pot can then be adjusted if required. Other points such as 10 and 15 kHz can be checked by the selection of 4,160 and 6,240 Hz frequencies, respectively, from Table 2. Internal signal generator frequencies could be used, but will result in values which are harder to work with, as shown by Table 1.

3. Using method for FM transmitter calibration

The same approach can be applied to an actual FM transmitter, with it being considered the "FM signal generator." A means of loosely coupling the transmitter to the receiver is required—usually through a dummy load on the transmitter and a whip antenna on the receiver. The receiver, with the crystal filter attached, is tuned to the transmitter frequency, or if the transmitter is variable, it can be adjusted to the receiver frequency. Again, carefully center the transmitter in the receiver bandpass and, thus, the crystal filter window. Apply a known audio frequency to the microphone input of the transmitter. If the audio generator is frequency-adjustable, pick a frequency for a desired deviation, such as 5 kHz, from Table 2. In this case, the audio frequency should be 2080 Hz for the first null indication. Remember that most transmitter audio amplifiers have limited bandpass, usually about 300 to 3,000 Hz. The audio frequency chosen must be in that range.

Increase the applied audio frequency level until the desired null is observed. In the example given,

Null	Deviation (kHz) for known audio frequency
First	2.4 × frequency (kHz)
Second	5.5 × frequency (kHz)
Third	8.7 × frequency (kHz)

Table 1. Determination of deviation based on known audio frequency.

Deviation	Signal generator audio frequency to produce stated deviation at null shown		
	First Null	Second Null	Third Null
1 kHz	416	181	116
2 kHz	838	362	232
3 kHz	1248	543	348
4 kHz	1676	724	464
5 kHz	2080	906	579
6 kHz	2496	1086	696
7 kHz	2912	1267	812
8 kHz	3352	1448	928
9 kHz	3744	1629	1044
10 kHz	4160	1810	1160
15 kHz	6240	2715	1740

Table 2. Determination of frequency to produce desired deviation.

this will represent a deviation of 5 kHz for that particular level of signal applied. To relate this back to the usual microphone input, measure the voltage level at the second or third audio stage (after the level or deviation control) with the fixed audio frequency applied at null. Next replace the audio generator with the regular microphone and give a long "ahhh" at your usual voice level and mike distance. Compare this resulting voltage level with that obtained with the audio generator input. Adjustment of the deviation and/or audio control may be necessary to make the mike output produce the same output level. Alternate the audio generator input at null compared with the mike input until both outputs result in the same level as measured on a scope or VTVM. The transmitter will then be adjusted to produce a deviation of 5 kHz (or whatever is desired) for normal conversation.

Conclusions

The accuracy of this method is far better than that required for most amateur work. The stability and setting of the signal generator are critical since the crystal filter has a sharp cutoff on either side of the resonant frequency. Usually it is easier to work with the first or, at the highest, the second null, since these are much more pronounced. With this simple test procedure, it is readily possible to calibrate FM signal generators or FM transmitters so that the deviation is accurately known instead of only guessed at or adjusted by ear. ■

Reader Service—see page 323.

Howard M. Berlin W3HB
2 Colony Blvd., Apt. 123
Wilmington DE 19802

Build the $80 Wonder

—a deluxe frequency counter/standard

Now that integrated circuit technology has advanced to the point that the construction of a reliable and easy-to-use frequency counter and standard is within the means and budget of most experimenters, I decided to join the crowd and build my own. A review of the amateur literature showed several promising circuits, but most had features that I didn't want or lacked those qualities which I found desirable. However, segments of various circuits were easily modified to meet the following specifications:

- HF range: up to 10 MHz (7 digits) without timebase switching
- UHF range: up to approximately 500 MHz
- Resolution: ±1 Hz up to 10 MHz; ±100 Hz with UHF prescaler
- Sensitivity: 100 mV rms up to 1 MHz; 200 mV rms up to 500 MHz
- Accuracy: better than 5 ppm at 1 MHz
- Frequency standard: switch selectable outputs of 30 kHz (for 2m FM), 10 kHz, 5 kHz, and 1 kHz
- Power: 120 V ac and 12 V dc (for use in automobile)
- Cost: about $80

The Overall Design

As shown in the block diagram of Fig. 1, the overall design of the counter and standard is pretty much typical of the majority of the present day units. The input signal is fed first either to a UHF prescaler (10-500 MHz) or to an input amplifier (up to 10 MHz) which shapes the signal into a train of rectangular pulses. This in turn is fed to the count gate controlled by the timebase. Prior to enabling the count gate, the display counters are reset to zero. At the end of a 1-second period, the LED display is frozen and the cycle is again repeated.

Timebase

Without the funds or the ambition to use a crystal oven, I used a standard TTL crystal-controlled oscillator as the heart of the timebase (Fig. 2). This 6 MHz source is a free-running astable multivibrator made up of two NAND gates, U1A and U1B. The 470Ω resistors bias the gates as a linear amplifier so that the oscillator is self-starting. U1C buffers the oscillator's output from the loading effects of the stages that follow. The trimmer capacitor is used to zero the oscillator against WWVB or WWVH.

The remainder of the timebase consists of cascaded binary counters to divide the 6 MHz oscillator frequency down to 10 Hz, while at the same time providing selectable 30 kHz, 10 kHz, 5 kHz, and 1 kHz outputs for the frequency standard.

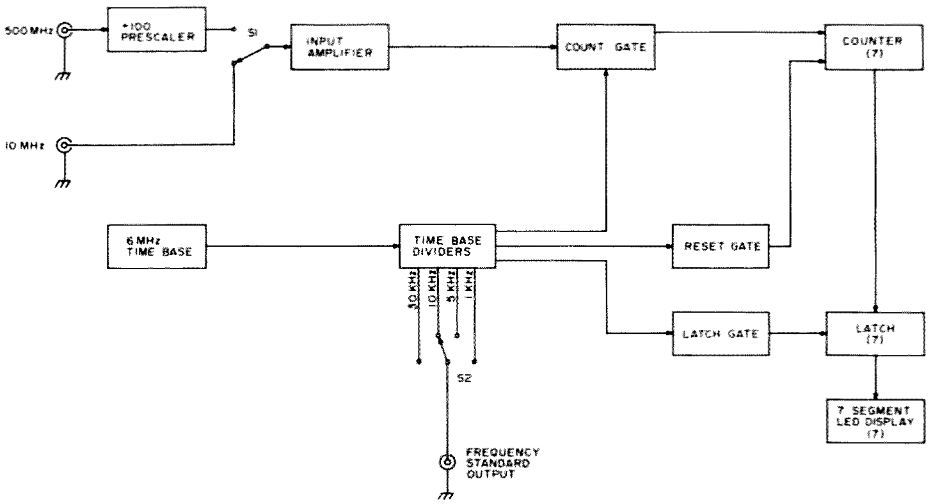

Fig. 1. Overall block diagram.

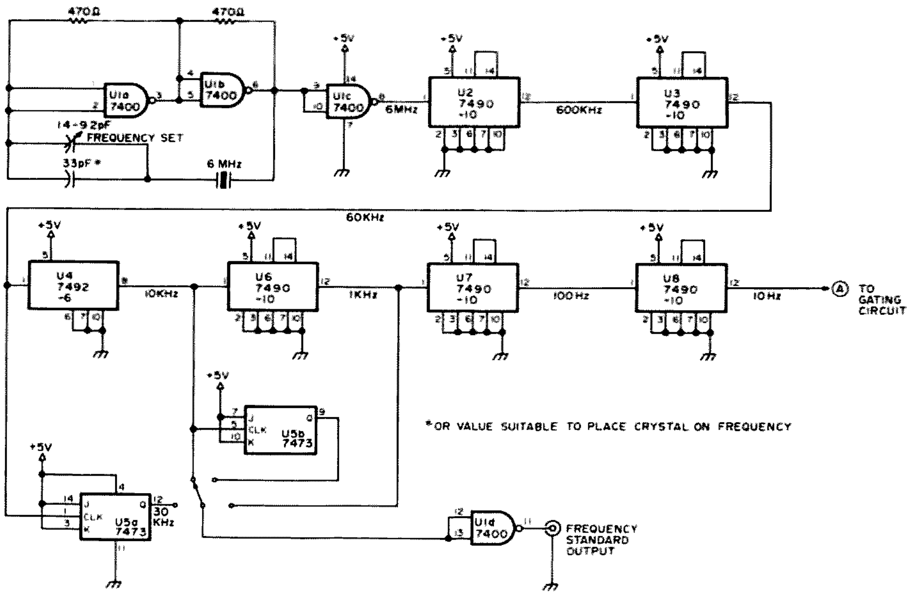

Fig. 2. Crystal-controlled timebase/frequency standard.

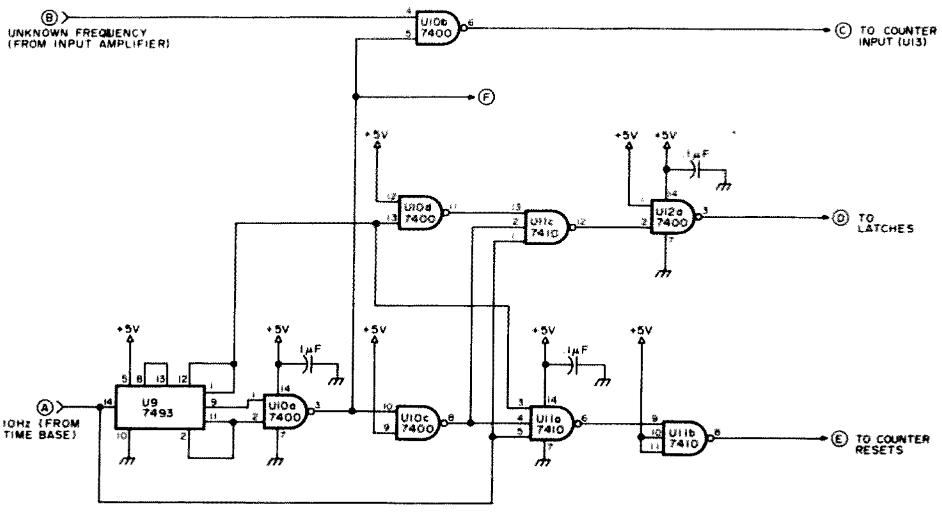

Fig. 3. The gating circuit.

Count/Reset/Latch Gate

The basics for the gating circuit shown in Fig. 3 were described by K1PLP and WA6GVC in the 5th part of their *QST* article.[1] U9 divides the 10 Hz input from the timebase by 12 (in BCD) to control the count gate (U10B), the reset gate (U11B), and the latch gate (U12A).

As illustrated in the timing diagram of Fig. 4, the reset gate (pin 8, U11B) first goes high, then the count gate (pin 4, U10B) is enabled for 1.0 second, allowing the unknown input frequency from the input amplifier to pass through. Finally, the latch gate (pin 8, U12A) is disabled to freeze the display until the next cycle is completed. In the original circuit,[1] the 74LS series of TTL integrated circuits was used. However, to keep the cost down, I used the standard 74 series, finding no difference in the circuit's performance.

Counters/Latch/Display

The counter, latch, and display circuit shown in Fig. 5 is a standard design. There is a 7490 decade (BCD) counter, a 7475 latch (4 bit), a 7447 decoder/driver, and a MAN-7 common anode LED display for each of the seven digits. The inputs to the circuit are from points C, D, and E of the gating circuit of Fig. 3.

To reduce cost and space, I used a 47Ω ½-Watt resistor for the current-limiting resistor for each LED display instead of the more conventional practice of using a 220Ω resistor for each segment (a total of 7 for each display). In some cases, not all of the segments will have exactly the same brightness, but I found this to be hardly noticeable. In addition, the displays are wired so that the leading zeros are blanked, resulting in an easier-to-read display.

Input Amplifier

Several designs were originally tried, but they either lacked sensitivity or didn't work quite right, assuming that I wired them correctly. I finally used the input amplifier shown in Fig. 6, which is somewhat similar to the one used by Radio Shack in their counter.

The input is capacitance coupled to the N-channel FET (Q1), which provides an input impedance of approximately 1 megohm. The 2 kΩ potentiometer is the input sensitivity adjustment. In addition, the input to Q1 is protected from overload by the two 1N914 diodes connected back to back. After some amplification, the signal is "squared up" by the two NAND gates connected as a Schmitt trigger. The resulting TTL level output is then connected to point B in Fig. 3 (pin 4, U10B).

UHF Prescaler

The UHF prescaler section (Fig. 7) is a straightforward design described by K2OAW.[2] It uses a Fairchild 11C90 ECL UHF decade counter having a guaranteed toggle frequency of 520 MHz. The input frequency to be scaled is coupled to the CP input of the device through a diode protection network, similar to that used for the input amplifier of Fig. 6.

A 74196 high-speed decade counter then divides the output signal of the 11C90, giving a total division of 100. Consequently,

7400	U1, 10, 12
7410	U11
7447	U27, 28, 29, 30, 31, 32, 33
7473	U5
7475	U20, 21, 22, 23, 24, 25, 26
7490	U2, 3, 6, 7, 8, 13, 14, 15, 16, 17, 18, 19
7492	U4
74196	U35
11C90	U34
LM309K	U36

Table 1. Required integrated circuits.

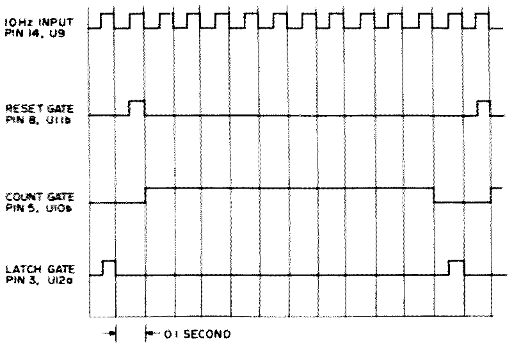

Fig. 4. Gating timing diagrams.

a 146,520,000 Hz input signal will be displayed as 1465200, with a resolution of ±100 Hz. For UHF work, such as setting FM transceivers, I have found that this resolution is accurate enough.

Power Supply

The power supply shown in Fig. 8 uses an LM309K 5-volt regulator IC to power the entire circuit. Using a heat sink for the regulator, the circuit is able to supply 1.5 Amps. On the average, the entire counter circuit will draw approximately 1.3 Amps. In addition, the SPDT switch allows the counter to be powered from a 12 V dc supply, which I have used in my automobile.

Construction

The entire circuit, except for the UHF prescaler, is mounted on vectorboard with 0.1" hole spacings. I used a vector wiring pencil to hand-wire the point-to-point contacts. In addition, sockets were used for all of the TTL ICs and LED displays. If you are ambitious and have the facilities, I would probably try to make my own printed circuit board. However, in either case, the liberal use of bypass capacitors as indicated in the schematic diagrams cannot be overemphasized. As a general rule, 1 bypass capacitor is needed for every 4 ICs. Depending on your particular layout, you may require more. These should be placed with the shortest leads possible at the IC's +5-volt power pin and ground. As an added precaution, place one at each point the power supply connections are made to the board or boards. When making connections between the power supply and the board, or when connecting up several boards such as the LED display, use at least #22 wire.

For the UHF prescaler, a compact arrangement with

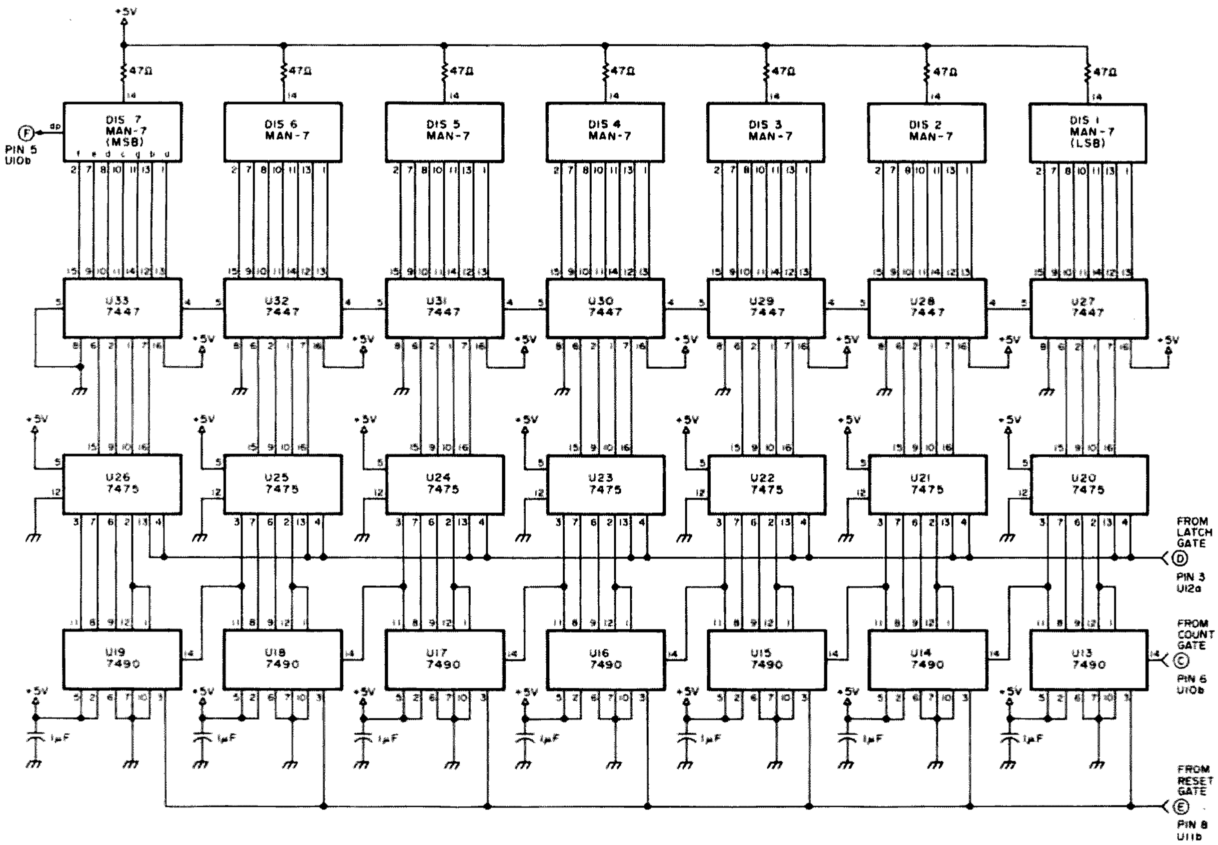

Fig. 5. Counter/latch/decoder/driver/LED display circuit.

short leads and a solid ground system is a must. Consequently, a printed circuit board is required to minimize capacitance effects at UHF. In K2OAW's article, an etched and drilled board is available for $7 from Star-Kits, G.P.O. Box 545, Staten Island NY 10314. In my unit, the prescaler board is mounted inside the enclosure without any additional shielding. For the 11C90 IC, you should not use a socket; however, it is okay for the 74196 IC. The entire circuit was mounted in an LMB cabinet whose style matched perfectly with my Collins S-line. BNC-type jacks were used for the input and output connections and were connected to the circuit boards by RG174 coaxial cable.

There is no off/on light, but as shown in Fig. 5, the left-hand decimal point of the most significant digit (DIS 7) is connected to point F (pin 5, U10B). Consequently, the decimal point blinks every time the count gate is enabled in addition to serving as a crude off/on light.

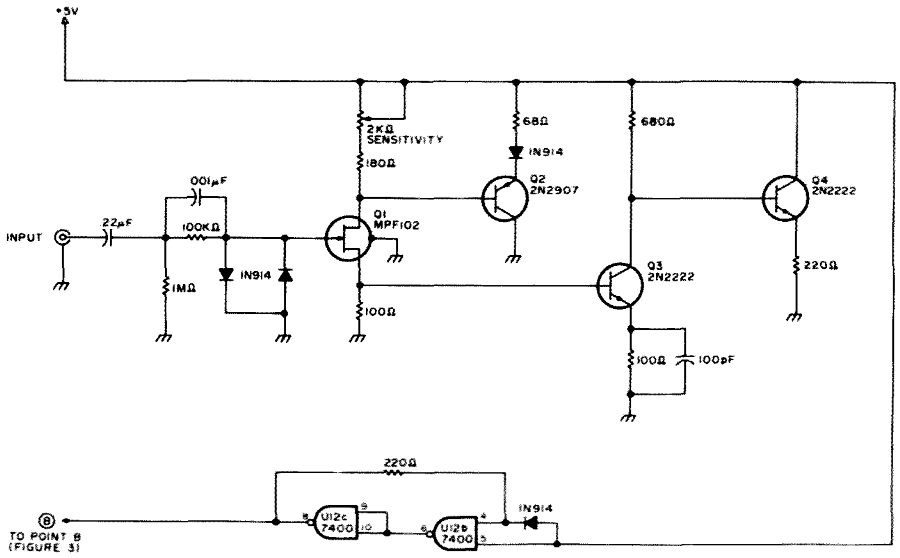

Fig. 6. Input amplifier.

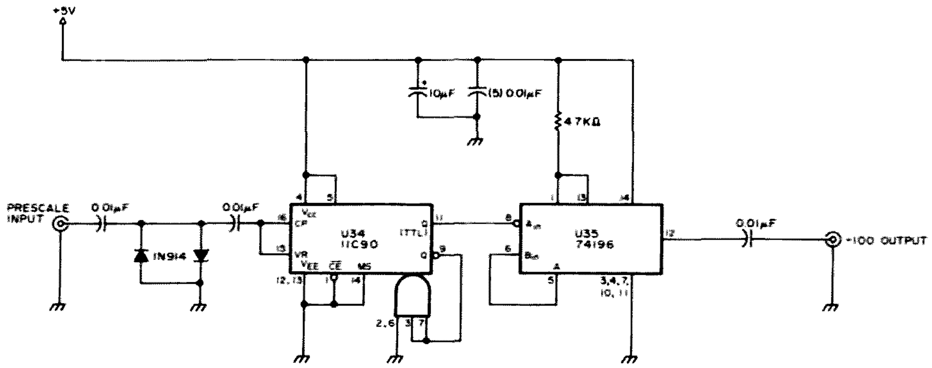

Fig. 7. UHF prescaler.

Operation

Operation of the counter and frequency standard is simple. Just turn the unit on and feed the signal to either the Normal (up to 10 MHz) or the Prescale input and set the input switch for the desired range. For on-the-air frequency measurements, I connected a short collapsible antenna to a BNC male plug.

After calibrating the counter's timebase against WWV, I had the unit checked out at a local calibration laboratory. When the unit was first turned on, the error of the timebase was 0.2 ppm. After running for 4 hours, the error was 0.7 ppm, although at times the error was as great as 1.5 ppm, as compared with a system whose accuracy is 1 part in 10^9. The input sensitivity at 1 MHz was measured with a programmable millivolt source, giving a best reading of 98 mV rms after adjustment of the 2 kΩ potentiometer. Although the counter reads directly down to 1 Hz for frequencies up to 10 MHz, the counter was able to measure a 21 MHz transmitted signal, but with the loss of the most significant digit (i.e., "2"). For the UHF prescaler, it was capable of measuring frequencies as high as 560 MHz. However, care must be taken to not overload the prescaler's input. It was possible to read a 1 W 2m FM signal from a distance of about 15 feet.

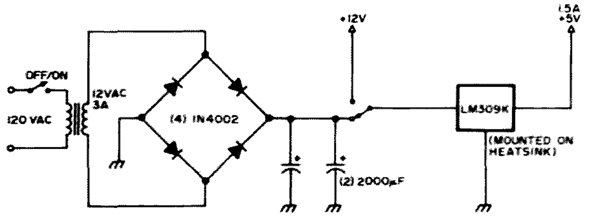

Fig. 8. Power supply for 120 V ac or 12 V dc operation.

As a first attempt to build a frequency counter and standard from scratch, I am very pleased with its performance, not to mention its cost. Using readily-available parts and the commercially-available printed circuit board described, I was able to build the entire unit for $80, which should be within the budget of those desiring such a piece of equipment. With careful shopping and the use of a homemade cabinet, it is possible to build it for even less. ■

References

1. J. Hall K1PLP, and C. Watts WA6GVC, "Learning to Work with Integrated Circuits," Part 5, *QST*, May, 1976, p. 17.

2. P. Stark K2OAW, "500 MHz Scaler," *73*, October, 1976, p. 62.

Bruce McNair N2YK/WB2NYK
12 Marion Ave.
Howell NJ 07731

Add-A-Scanner

—for any synthesized rig

Since getting a synthesized 2 meter rig, I have noticed that having the capability to tune something like 66 repeater and simplex frequencies means that you have one chance in 66 of being tuned to the one on which someone is calling you. If you do have one favorite or prearranged frequency to operate on, it is usually inconvenient to tune to that frequency when you have to set 3 thumbwheel switches. These problems are what originally encouraged me to start cutting wires and modifying my HW-2036. Actually, the circuit to be described could easily be adapted to other types of synthesizers or even crystal-controlled rigs that employ diode crystal switching.

The design evolved through about four stages, each complete in itself. I'll try to describe each in enough detail so that you can stop at whatever point satisfies your requirements.

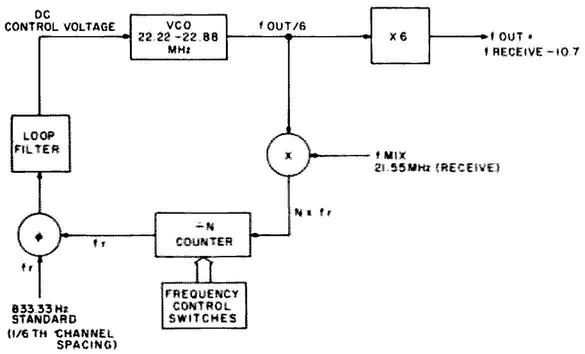

Fig. 1. Typical synthesizer block diagram.

Trade-offs

What I really needed was a scanning circuit for my synthesizer which would alternately tune the frequency indicated on the front panel switches and at least one predetermined frequency. Following are a number of alternatives for each portion of the design. The first shown is the one selected in each case.

1. Scanning
   a. Automatic—would scan when there is no activity and halt on the first busy channel. This approach requires only 2 (cheap) ICs and a handful of discrete components.
   b. Manual—requires only an SPDT front-panel switch. Allows rapid frequency change between 2 channels.
2. Number of scanned channels
   a. 2—front panel, plus one set internally. With more than two, it might be difficult

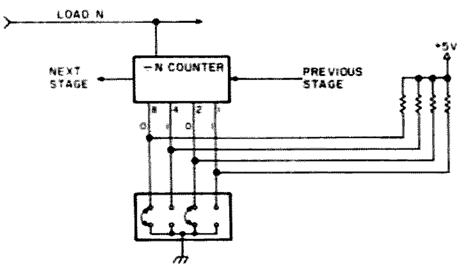

Fig. 2. One stage of ÷N counter.

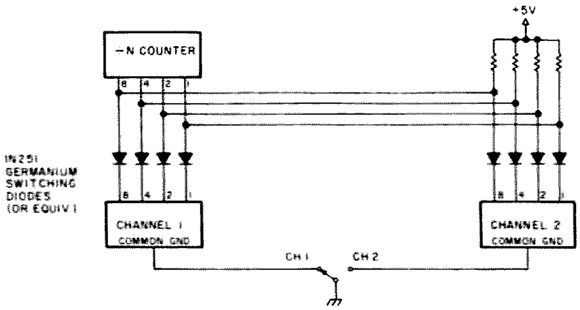

Fig. 3. Alternate channel selection.

to figure out where you are.

b. 3 or 4—with automatic scanning. Only requires one more (cheap) IC and a few more discrete parts.

3. Method of channel entry/programming

a. DIP switches—internal to rig. Allows easy reprogramming.

b. Hardwired diodes—probably the best (i.e., cheapest) if you don't plan on changing frequencies often, or are using more scanned channels.

c. Digital memory—programmed by front panel switches. Easy to reprogram, but relatively costly.

4. Scanning of receive-only or receive and transmit frequency

a. Receive—if both the primary and secondary channels are either simplex or repeater frequencies, then the required offset is generated automatically. If modes are different, it is a simple matter to switch to the correct mode when activity is heard.

b. Receive and transmit—many more components are, in general, required. There are easier ways to generate transmit offset.

Theory of Operation

Before I describe the scanner and how it gets connected to the rig, let me describe what a typical rig's synthesizer would look like. Fig. 1 is a block diagram of the HW-2036 synthesizer in receive mode. This diagram is representative of synthesizers used in amateur rigs for the purposes of this article.

When the loop is locked to the reference frequency, the loop output ($f_{out}/6$) is equal to $f_{mix} + N \times f_{reference}$, where f_{mix} is the mixing frequency, $f_{reference}$ is the crystal controlled reference, and N is the channel number, set by the front panel switches.

The digital number N is the only input to the loop and is the signal which controls the operating frequency. This is done by causing N to vary the division ratio of the ÷N counter.

Fig. 2 shows one stage of the ÷N counter used in the HW-2036. To cause the counter to divide by 5, for example, 5 (0101 in binary) is set by the BCD switch. Actually, the switch only sets the bits which are 0 by pulling those lines to ground. The 1s are pulled up to +5 volts by the resistors.

Implementing the Theory

This suggests a method for setting the second channel. If it were possible to disable the front panel switches from grounding the programming lines and provide an alternate ground path for the required lines, this could be used to program a secondary channel. It is not sufficient to disconnect the common ground connection on the switches because, depending on the channel set on the front panel, some of the programming lines will be shorted together. This can easily be cured by inserting a diode in each line from the ÷N counters, as illustrated in Fig. 3. These diodes will not affect nor-

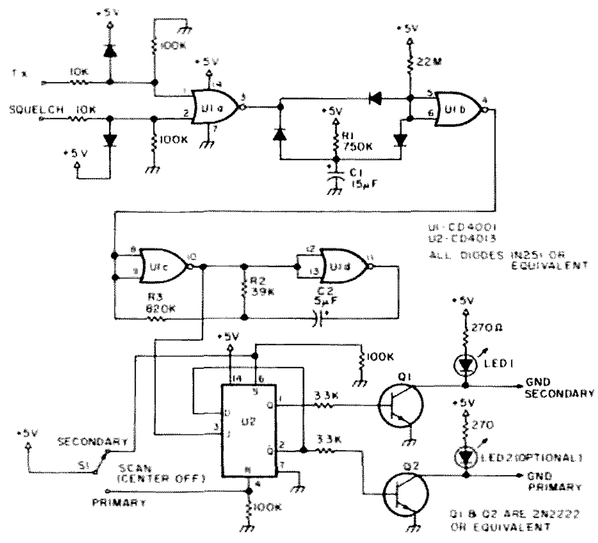

Fig. 4. Automatic scanning circuit.

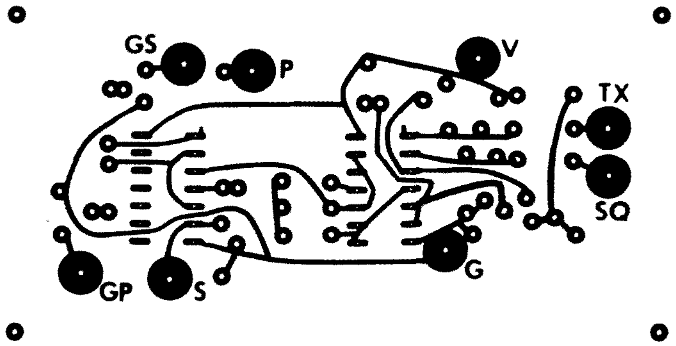

Fig. 5. PC board layout for synthesizer scanning adapter.

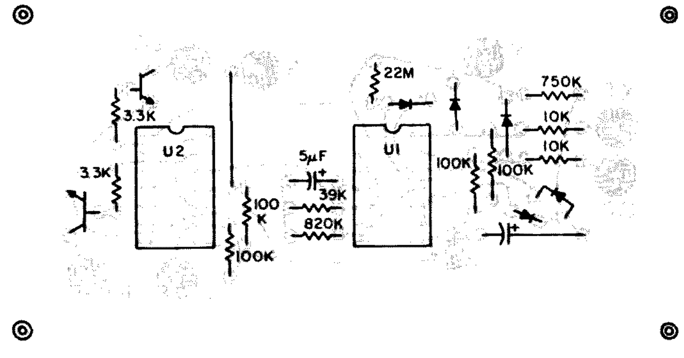

Fig. 6. Parts placement for synthesizer scanning adapter (foil side view).

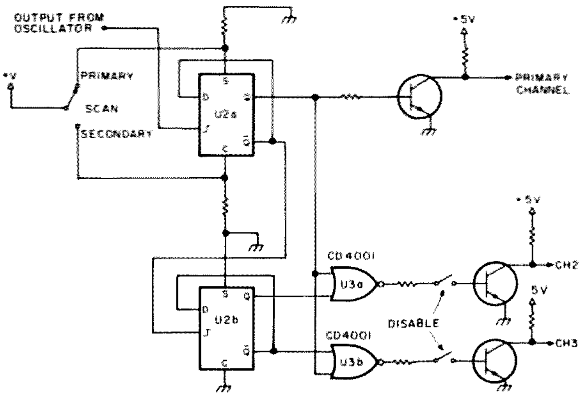

Fig. 7. Three channel scanner.

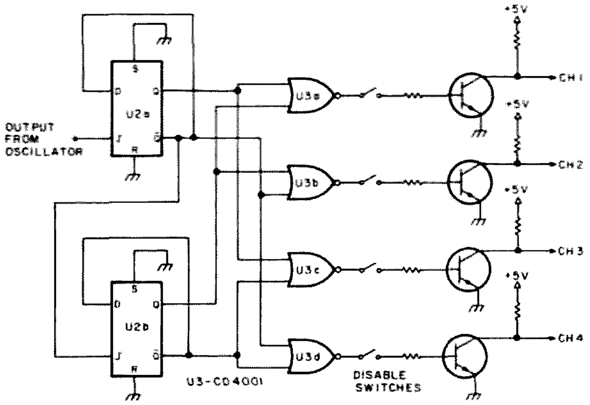

Fig. 8. Four channel scanner.

mal operation of the divider, as long as the logic 0 level does not exceed approximately 0.8 volts. Germanium diodes with a forward drop of 0.3 volts will help guarantee this condition.

This then gives all the information needed to build a manual 2 channel scanner, as shown in Fig. 2.

The switches used to select the secondary channel have many possibilities. The simplest and cheapest is to put diodes only in the lines that are to be 0. This method is, of course, difficult to reprogram. Next, and the one I have used, is to use so-called DIP switches. These are 8 SPST switches in a package the size of a 16-pin IC. Two DIP switches (at a total cost of less than $5) could program MHz, 100s of kHz, 10s of kHz, and 5 kHz with 3 switches left over for other purposes. DIP switches are easily reprogrammed, if you remember how to convert decimal numbers to BCD. The most convenient, and, of course, the most expensive, system is to use a second set of thumbwheel switches. I had no trouble finding room for 2 DIP switches, but would have been hard pressed to fit a second set of thumbwheel switches.

Automatic Scanning

The next thing to consider is how this scanning circuit can be made automatic. The requirements for the scanning circuit are listed below.

1. Scanning is disabled when the receiver squelch is opened—on the channel which caused the squelch to open.

2. Scanning is disabled when the rig is transmitting.

3. The rig should hang onto a channel for some time after scanning is disabled to allow the other side of the communication to start. Five seconds seemed to be a reasonable value.

4. In the absence of the three conditions above, scanning should cause the transceiver to alternately select the programmed channels. The scan rate should be slow enough to allow for synthesizer lock-up time and squelch attack time. 250 ms per channel was chosen so that less than half the time is wasted for lock-up time.

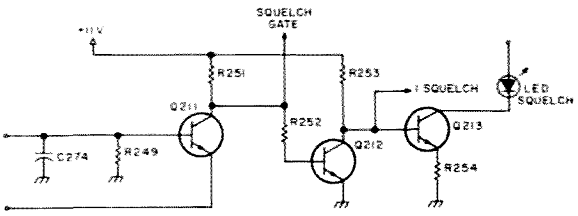

Fig. 9. HW-2036 squelch circuit.

Shown in Fig. 4 is the schematic of the circuit to accomplish automatic scanning. A PC board layout is shown in Fig. 5 with parts placement in Fig. 6. Actually, the PC board is included only for completeness as my scanner was haywired on a piece of perforated board and has been working fine for the past few months. For those who would like to construct this scanner on a PC board but don't have PC facilities, boards and parts kits will be available from the author. Send an SASE for information.

Operation

U1A generates a 0 output if the squelch is open *or* if the rig is transmitting. When U1A goes low, the charge is pulled off C1 to hold the channel for 5 seconds. C1 charges slowly through R1. If either U1A is low or if the voltage across C1 is low, U1B's input is low, producing a high output. This 1 disables the oscillator comprised of U1C, U1D, R2, R3, and C2. R2 and C2 mainly determine the scan rate. The oscillator output, U1C, pin 10, drives a D-type flip-flop which alternates between turning on Q1 and Q2. When Q1, for example, is turned on, LED1 is lit, indicating that the secondary channel is enabled, and ground is provided to the secondary channel switches. I decided to use an LED to indicate only the secondary channel. There is no reason you couldn't use an LED for each channel, if you can remember which is which. A convenient place to mount the LED is in a hole drilled through the back of the S-meter. S1 is an SPDT center-off toggle mounted on the front panel. When switched to either on position, S1 forces the scanner to one of the selected channels by either setting or clearing U2. When switched to the center off position, the flip-flop toggles and, thus, scanning occurs.

This, then, is the entire scanner. Parts cost is very low even if you don't hunt for bargain parts or raid the junk box. Cost should be less than $10.

Options

One option is to increase the number of scanned channels. As it happens, U2 is only half used. The other half, plus one other 20¢ IC

and a few discrete components, gives you a three or four channel scanner. Two variations are shown in Figs. 7 and 8. Note that for the 3 channel scanner, two switches are provided to disable either secondary channel separately. As designed, the scanner will spend twice as much time on the primary channel as either of the secondary ones. The scan sequence will be: primary-secondary 1, primary-secondary 2, etc. In the 3 or 4 channel scanners, an additional CD4001 is used to decode scanning of the various channels.

Installation

Whichever scanning circuit is used, it will be necessary to obtain the required squelch and transmit signals from the transceiver. This will vary from one rig to another, but, as a guide, connections for the HW-2036 are shown in Figs. 9 and 10.

Note that on the scanner schematic the inputs to U1A have been connected through a series resistor with a shunt diode tied to +5 volts. This is because in the HW-2036, and probably most other rigs, the signals to indicate squelch and transmit may, at times, be greater than +5 volts. The input circuit will protect U1 from damage.

As I mentioned at the start of this article, the circuit is also usable on crystal-controlled rigs that employ diode crystal switching. If yours is such a rig, check to see if the schematic looks similar to that shown in Fig. 11. If it is, break the line connected to the indicated crystal (marked with an X) and connect it to the scanner primary and secondary ground lines.

Conclusion

I'll be glad to offer my assistance in figuring out how to install this circuit in different rigs as long as no major redesign of the scanner or rig is necessary! I've already considered some of the commercially available rigs but would appreciate a copy of the schematic and an SASE to return the details.

Thanks to Mike WB2BWJ for his constant, and occasionally useful, criticism during this project, especially as I started to cut up my HW-2036. ■

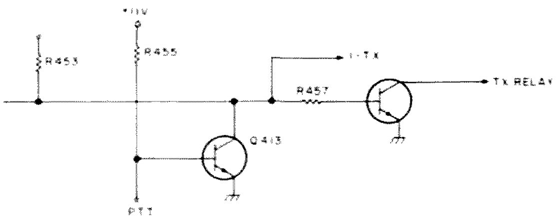

Fig. 10. HW-2036 transmit PTT circuit.

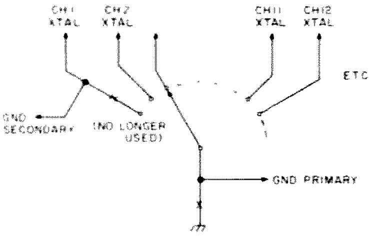

Fig. 11. Installation of scanner in crystal-controlled rig.

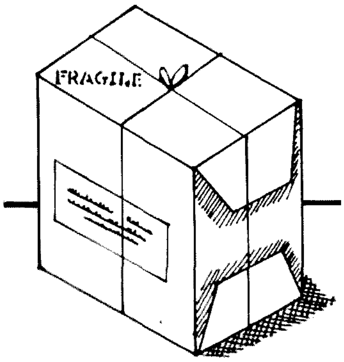

CB to 10

—part XIV: a Realistic PLL rig

Robert F. Grochowsky KØQLC
3553 SW 35th Terr.
Topeka KS 66614

A growing interest in CB-to-10 conversions, combined with a close-out sale at Radio Shack, resulted in the recent purchase of a Realistic TRC-452 40-channel CB. I had earlier obtained a 23-channel Royce set for conversion, but felt the cost for crystals was not justified to obtain only 23 channels. I must admit to a certain amount of blind faith in the TRC-452 purchase, but I figured a rig with only two crystals had to be both easier and cheaper to convert. This was later found to be true on both counts.

Although I had read all the earlier conversion articles in *73 Magazine*, I had not studied them in great detail, except for my passing interest in the Royce. Another review of the articles showed little information on conversion of a phase-locked-loop (PLL) rig. This meant a great deal of studying digital frequency synthesis, and many hours spent in technical discussions with Gene Godsey KØBXJ and others. This article is intended to share the information gathered, and help others converting the PLL-type rigs.

Crystal Control

With crystal prices increasing and integrated circuit prices decreasing, it was only a matter of time before someone came up with a better way to synthesize the necessary frequencies for CB. Crystalplex reduced the crystal count from 46 to 14, but the advent of the phase locked loop reduced the count to just 2 crystals in most of the newer rigs. At first glance, it may seem that these rigs are no longer crystal controlled, but further study shows that they are. Since the reference frequency is derived from a crystal oscillator, the tolerance and precision of the reference frequency and the output frequency will be that of a crystal.

Mixer Circuits

In order to understand PLL circuits, an understanding of mixer circuits is necessary. In the most basic terms, a mixer has two input frequencies and four output frequencies. The frequency we will be interested in is either the sum of the original frequencies or the difference between the original frequencies. It is important to remember that either the sum or difference may be used, and they may be used differently in separate circuits within the rig.

Even the simplest single-conversion receiver in CB will normally use two mixer stages to arrive at the desired intermediate frequency (i-f) of 455 kHz. Two frequencies are mixed to arrive at the sum, and this signal, either 455 kHz above or below the received signal, will be mixed with the received signal to

arrive at 455 kHz.

Dual-conversion receivers use an additional frequency conversion stage for lower noise and less distortion of the received signal. Now we have two i-fs, and we may have additional amplifiers for each i-f. The first i-f is normally around 10 MHz and may be determined by close examination of the schematic.

Phase-Locked-Loop (PLL) Circuits

Most PLL circuits consist of 4 major components: a phase detector, a filter amplifier, a voltage controlled oscillator (vco), and a 1/N divider, plus other supporting components. Fig. 1 shows the diagram of these components as used in the TRC-452.

The phase detector produces a voltage proportional to the phase difference of two input signals. The low-pass filter (filter amp) integrates the output voltage of the phase detector and also filters harmonics of frequency components given to the phase detector. Then it produces a continuous voltage component in proportion to the phase difference. The vfo is an oscillator whose frequency is controlled by the voltage applied to it. The vco frequency is fed back to the phase detector through the 1/N divider. (The constant, N, is given by the channel selector switch.) So, the output frequency from the vco becomes N times the input frequency.

The reference divider has two sections: One is a divide-by-2 circuit which produces 5.12 MHz; the other is a divide-by-1024 circuit which produces 10 kHz which is applied to one input of the phase detector. All PLL circuits studied use 10.24 MHz as the reference frequency. The 5.12-MHz output from the reference divider goes through a filter which selects the harmonic produced at 15.36 MHz. The vco frequency is mixed with this 15.36-MHz signal, goes through IC2 interface, and is then divided to 10 kHz by the 1/N divider. This is applied to the other input of the phase detector. The phase detector detects the difference of these two input signals and produces a voltage which controls the vco frequency. When the phase of the two input signals to the phase detector is the same, this loop is "locked."

As mentioned earlier, the output frequency from the vco is N times the input frequency, 10 kHz. By varying the constant N, the output frequency can be varied one 10-kHz step at a time. The constant N is controlled by the channel selector switch (from 182 to 226).

Another output of the 10.24-MHz reference oscillator, not shown, is used to mix with the first i-f for the receiver. The incoming signal frequency (26.965 MHz for channel 1) is mixed with the vco output frequency (17.18 MHz for channel 1), which will produce 9.785 MHz as the first i-f. This 9.785 MHz is then mixed with the 10.240-MHz output of the reference oscillator to produce the 455 kHz second i-f.

Also not shown is the transmit local oscillator, which is set at 9.785 MHz. This signal is mixed with the vco output frequency to produce the transmit frequency. 17.18 MHz plus 9.785 MHz equals 26.965 MHz, which is the channel 1 frequency.

Now that we are familiar with PLL circuits, let's take a look at this circuit and see what we can change to provide the new operating frequency.

The first impulse is to change the 10.24 MHz crystal. But too many things are dependent on this frequency. We are using a divide-by-1024 to provide the 10-kHz reference to the phase detector, so any change in the reference frequency will adversely affect our divider. We are also using a divide-by-2 to produce the 15.36-MHz harmonic which is mixed with the vco output.

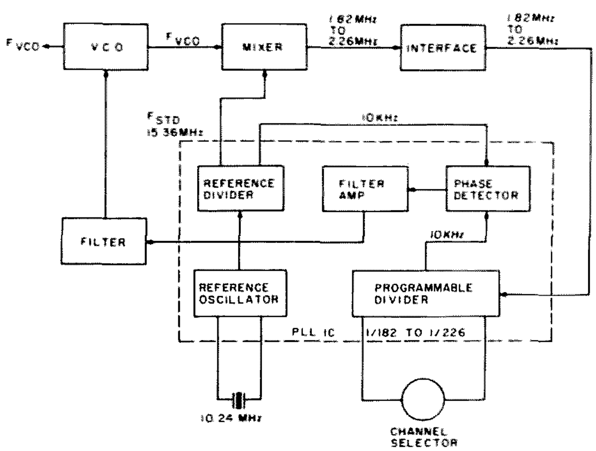

Fig. 1. Block diagram of the PLL components as used in the TRC-452.

By now, things seem pretty complicated. Any change in the 10.24-MHz reference changes the mathematical relationships between quite a few components. There seems to be no easy way to change the frequency of this rig. But further analysis shows that there is an easy way. Let's look at the way the vco changes frequency again.

10.24 MHz is divided by 1024 to produce a 10-kHz input to one side of the phase detector. If the channel selector switch is set to channel 1, which programs the divider to divide by 182, then the result of mixing the vco output with the 15.36-MHz reference *must* be 1.82 MHz to divide to the 10 kHz needed for the other input to the phase detector. The phase detector will detect any frequency difference, high or low, and adjust the vco up or down until the mixed output is exactly 1.82 MHz.

The key to the whole frequency change is tied to the 15.36-MHz reference. We can't change the reference divider, and we don't want to disable the whole reference divider, as we would kill our 10-kHz reference to the phase detector. Let's disconnect the 15.36-MHz reference from the mixer and replace it with a new oscillator set for 16.955 MHz. The vco will now be driven higher by the phase detector until the difference of 1.82 MHz is reached. The new vco output frequency will be 16.955 MHz plus 1.82 MHz, or 18.775 MHz. Mixing 18.775 MHz with the 9.785 MHz in the transmitter gives us a new frequency of 28.560 MHz for channel 1, which is right where we want to be. Mixing 18.775 MHz with the incoming signal of 28.560 MHz also keeps our first receiver i-f at 9.785 MHz, right where it was before. Everything else checks out, and all that we changed was the frequency reference applied to the mixer.

This works well in theory, so let's see how it works in practice. Fig. 2 shows the schematic for a simple crystal oscillator with no tuned circuit. This circuit and others are described in *Solid State Design for the Radio Amateur* (ARRL). This

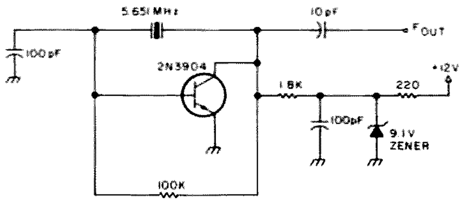

Fig. 2. Oscillator used for fixed-channel operation of the TRC-452. All resistors are ¼ Watt.

oscillator is used for fixed-channel operation. For those who desire tuning capability, a variable crystal oscillator may be used.

Although some would say the oscillator output is dirty, I prefer to think of it as being rich in harmonic content. The circuitry of the TRC-452 is set up to use the third harmonic of 5.12 MHz, so a 5.651-MHz crystal will give a usable harmonic at 16.955 MHz. The combination of C3/L3 on the PLL board will filter all but the desired frequency, but it may be necessary to change the value of C3 to 30 pF to peak the filter at 16.955 MHz.

The first step in conversion is to remove the covers and locate the PLL board. It will then be necessary to remove the PLL board. In the TRC-452, the PLL board and side cover are soldered in place. Locate coupling capacitor C4 on the PLL board. Remove and discard this capacitor. Small shielded cable from the oscillator is now inserted in the C4 hole nearest the edge of the board and soldered in place. Reinsert the PLL board and tack in place. Be sure to connect all pins, as most of these are used in circuits as well as providing mounting stability.

Next, connect the oscillator to a well-regulated supply and apply power to both the oscillator and the rig. A frequency counter should be connected to the output of the 1st local oscillator. At this point, the frequency counter will probably not show any output, but don't be concerned. Set the channel selector for channel 20. Now carefully adjust L2 on the PLL board and set it for the midpoint of the range where oscillation occurs. The frequency counter should indicate 19.115 MHz. Start with channel 1 and check all 40 channels. If the vco circuit, including L2, is functioning properly, we should show frequencies starting with 18.775 MHz for channel 1 and following normal CB channel spacing up through 19.215 for channel 40. If the oscillator drops out on either end, slight readjustment of L2 may be needed.

Now proceed with receiver alignment. Connect a signal generator to the antenna jack and set it for 28.800 MHz with 1-kHz modulation. Turn the channel selector to channel 20. Connect either an audio VTVM or oscilloscope to the external speaker jack. Now adjust L201 for maximum output. Set the channel selector to channel 40 and the signal generator to 29.000 MHz. Adjust the primary of L202 (black vinyl tube) for maximum. Set the channel selector to channel 1 and the signal generator to 28.560 MHz. This time, adjust the secondary of L202 (red vinyl) for maximum. Set up again for channel 20 and adjust L203 for maximum output. This completes the receiver alignment.

Transmitter alignment is the final step in conversion. For this, I deviated slightly from the procedure given in the service manual. Connect either a wattmeter or swr bridge to the antenna jack and connect a dummy load. Again using channel 20, key the microphone and adjust L214 for maximum output. This will bring the final into resonance and prevent damage during extended key-down periods. Now adjust, in order, L208, L209, L210, L211, L212, and again adjust L214. These should all be tuned for maximum output. On the last adjustment of L214, detune slightly to extend the life of the final transistor. To complete transmitter alignment, modulate the transmitter with a 1-kHz signal at a level of 100 millivolts, and adjust VR207 to show 100% modulation on the oscilloscope.

The rig is now set up for 10 meters, and we must give some serious consideration to placement of the oscillator within the rig. Adequate shielding cannot be over-emphasized, and for this reason I chose to mount the oscillator on the top cover of the PLL board. Some angle stock and the rig cover will provide satisfactory shielding from rf. The shielded lead from the oscillator may be run down, and into, the PLL box between the two printed circuit boards. Since the oscillator has its own zener diode for voltage regulation, the power lead may be run to the switched +12 volts on the on/off volume control.

Whether you choose to convert a TRC-452 or some other PLL-type rig, the technique presented here should allow a quick, easy conversion.

If the vco refuses to drive up to the frequency needed, an alternative is to replace the transmitter crystal with one cut for 11.380 MHz, remove coupling capacitor C212 from the receiver, and use a separate oscillator set at 11.835 MHz to feed into the receiver mixer. Transmitter and receiver alignment should proceed as previously outlined.

Well, that's it. Replace the covers and you're set for a lot of activity on 10 meter AM. Or if you're like me, you can start planning for more modifications and accessories. A linear amplifier in the 20- to 25-Watt range would be nice. A variable crystal oscillator (vxo) circuit would allow shifting ±10 kHz to completely cover this segment of the band. The rf gain could be hardwired to allow using the control for the vxo. The PA function can be disabled and the switch used to apply a small amount of signal from the 9.785-MHz oscillator into the receiver to provide a beat frequency for SSB reception. And the list goes on.

Without a doubt, the TRC-452 proved to be both cheap and easy to convert. The crystal was my only expense as the junk box provided all other parts.

One last word of warning—10 meter fever is contagious and quickly spreads! On the day I converted my rig, I used 2 meters to tell KØBXJ to listen for me on 10. This immediately produced 2 hams talking back to me on 10 meter AM. One ham who listened got curious enough to visit me, and about 6 others who listened on 10 gave reports and suggestions on 2 meters. ■

References

"CB to 10" series, *73 Magazine*, May, July, December, 1977; February, August, September, October, 1978.

Realistic TRC-452 Service Manual, Radio Shack.

Solid State Design for the Radio Amateur, ARRL, 1977.

No More Excuses!

—get on RTTY with this simple demodulator

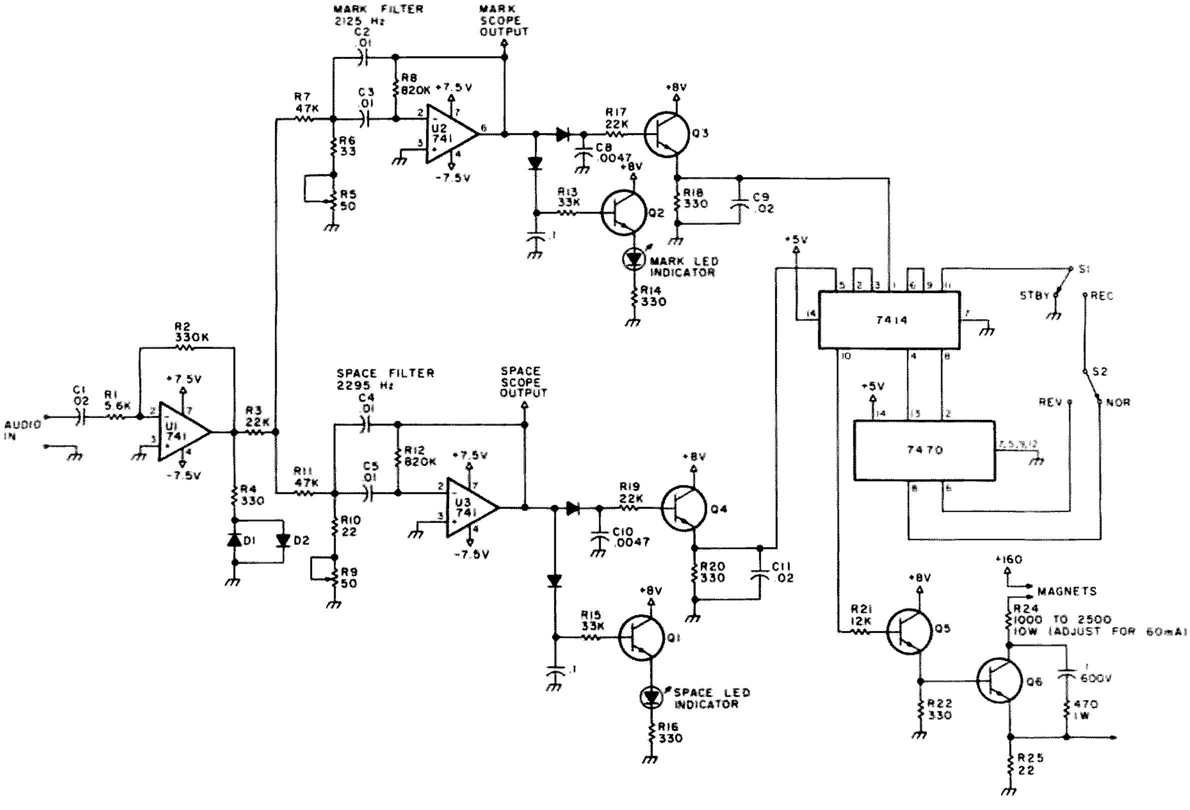

Fig. 1. Active filter RTTY demodulator schematic diagram.

Winford Rister WB4MBL
402 Allicia St.
Albertville AL 35950

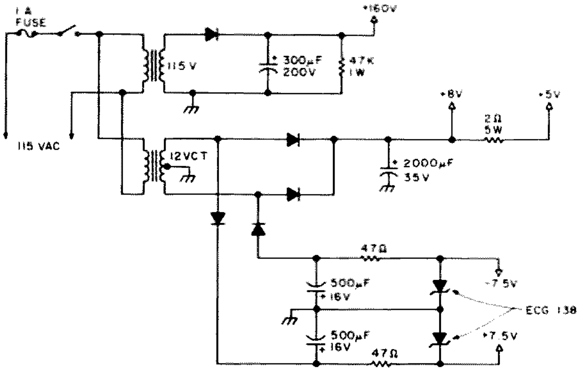

Fig. 2. Power supply schematic diagram.

After spending a lot of time looking for a circuit for a simple, easy-to-build, economical, good-performing RTTY demodulator, I decided to try designing my own. What resulted (besides pulling hair, etc.) was a relatively inexpensive unit which provides excellent copy, is easy to tune, and utilizes active filters. Of course, this is in addition to a swelled head and elated feeling which always arises when a circuit I design works well.

Theory of Operation

See Fig. 1. The main difference between this circuit and others I have read of is the use of active mark and space filters, LED indicators, and TTL switching logic. Circuit operation is very straightforward. The audio is applied to U1, where it is amplified, clipped, and fed to the mark and space filters, consisting of U2 and U3 and the associated RC networks. The filter outputs are shaped and amplified by Q3, Q4, and the Schmitt trigger, D4. The signal is double inverted here—once in obtaining the level detection and once to obtain the correct polarity to the flip-flop, U5. The flip-flop's outputs change state when the mark and space signals alternate. This output is inverted by another section of the Schmitt trigger chip. This prevents the machine from running open under no-signal conditions. (The Q and $\overline{Q}$ outputs are both low under no-signal conditions.)

A reversing switch selects either the Q or $\overline{Q}$ output for normal/reverse copy without having to switch to USB. This is an advantage for transceive operation. From the Schmitt trigger, the switching signal is applied to Q5, the switching follower/driver which drives the loop keyer, Q6.

Construction and Circuit Details

The complete unit, less the power supply, can be built on a 3" by 5" PC board. In the prototype unit, I use three boards: the power supply electronics, the demodulator, and the AFSK oscillator. Inexpensive, individual 8-pin op amps (741s) were used in the prototype unit, but some expense and trouble could be saved by using one of the quad op amp chips such as the LM324, which only requires a single polarity supply voltage.

The value for R4 was chosen experimentally for best performance, as were many of the other components of the unit. The filter circuit is taken from the January 15, 1970 edition of *EDN* magazine. The equations and parameters are listed in Table 1. There are two areas of caution: The feedback resistor R8 or R12 should not exceed 1 megohm because of large offset voltages. The frequency trimming resistors R5 and R9 should be as large as possible because of the attenuating effect they have on the input signal and the resulting possibility of the filter not being able to drive the following stage. R5 and R9 are of the miniature type and can be mounted directly to the PC board.

Q1 and Q2 are the LED drivers. Outputs for scope monitoring are taken directly from the filter outputs. Q3 and Q4 are emitter followers which drive the Schmitt trigger, which drives the flip-flop, which drives the keying follower/driver, which (finally) drives the loop keyer. All transistors are general purpose NPN silicon-type except for the loop keyer.

The output at the top of R22 must be amplified in order to drive an AFSK or FSK unit. I do this by using a separate transistor on the AFSK board.

Except for the loop supply, all the voltages are taken from one 12 V c-t transformer. The ±7.5 volts is taken directly from the filtered output and regulated as shown in Fig. 2. The 8-volt supply is simply the unregulated filtered output. The 5-volt supply is obtained by using series resistance from the 8-volt supply. Regulators for the 5- and 8-volt supplies were not used for economical reasons, and no problems have been encountered with them.

Conclusion

Active filters are the easiest type to tune and use, and, therefore, make this unit very easy to build. Also, the unit is compatible with the UT-4, if desired. As with anything new, it is often difficult to get started on the right foot. This demodulator will allow the newcomer to RTTY an inexpensive means to get his feet wet and still realize the full enjoyment of using a unit that performs well. I wish to give special thanks to Jimmy Straughn K4COV for his encouragement and assistance in writing this article. ■

Mark filter U2		**Space filter U3**	
F	2125 Hz	F	2295 Hz
R7	47k	R11	47k
R8	820k	R12	820k
R5	69	R9	59
C2, C3	.01	C4, C5	.01
B	39 Hz	B	39 Hz
A	8.68	A	8.68
Q	54	Q	59

Table 1. Active filter data, where: F = center frequency; B = 3 dB bandwidth; A = voltage gain of filter at F; Q = F/B; R7,11 = $(2\pi BAC)^{-1}$; R8,12 = $(\pi BC)^{-1}$; and R5,9 = $1/[2\pi c(2F^2/B - BA)]$.

John C. Conner WA4DQN
522 Notre Dame Ave.
Chattanooga TN 37412

The Junk Box Station

—ham ingenuity does it again

Since you ran that photo of my home brew transmitter in the May, 1977, issue of *73*, I was surprised to receive letters of inquiry about it, especially since you printed only my name, city, and state without including my call or address. I don't know if it is due to the large circulation factor of *73* or whether there is actually a considerable number of readers who are interested in what can be home brewed from junk parts. Anyway, assuming the latter to be correct, I thought I would send in a photo of my entire home brew station, which is just about as home brew as a ham like me can make it, from the keyer paddles on.

I can say that I had no trouble finding parts. The transmitter is made mostly from parts from my old black and white TV and the receiver comes mostly from parts salvaged from a bunch of smashed-up or non-working transistor radios I purchased at a flea market for 25¢ apiece.

The transmitter, which uses a 6AU6 vfo, 6W6 driver/multiplier (TV audio output tube), and a pair of 6DQ6s (TV horizontal output tubes) in the class C final, can run up to 160 Watts input (if my little VOM is accurate) and about 120 Watts output, judging from the brilliance of a 100-Watt light bulb used as a dummy antenna.

There was a lot of trial and failure in building this rig. I first tried a solid state vfo, then a tube type with a cathode follower and buffer; finally, I came up with the single 6AU6 in a Colpitts circuit which doubles in its output that gave my desired results and also simplified the design considerably. I have tried to make the transmitter sound as good as the best that is on the air, and with my hand-wound choke in the keying shaping circuit and the fact that I can detect no oscillator pulling or other shift, I believe I have had some success in my efforts.

I made a check of the harmonic output of this station by using another receiver with an S-meter. And by adjusting the rf gain until the meter read as near zero as I could get it on my second harmonic (20m), then flipping the bandswitch and tuning in the fundamental (40m), the meter read close to 70. So, if this means my second harmonic is 70 dB down, then I think the suppression is adequate. I have had no TVI complaints, even in my own house. And

my home brew TV yagi is right under my roof-mounted inverted vee and in the field of its current loop.

I mentioned the word "adequate" above, but with hams like me it is often a fluid expression. I know if I can get my harmonic down 70 dB, then why not 80 or more?

My receiver (the small box on the right in the photo) is an all-transistor dual conversion superhet with cascode FETs in the rf stage and a crystal-controlled first conversion oscillator. It also has a home brew double crystal 350 cps bandpass filter in the second conversion i-f. The receiver is completely self-contained with power supply, speaker, and everything (except the antenna) enclosed in its cabinet. That cabinet, incidentally, is a card index file box I bought at a dime store for $1.49; this was the only ready-made cabinet I bought for this project. The transmitter chassis is made from a galvanized sheet I purchased from the roll at the hardware store, but I forgot where I got the aluminum to make the cover and vfo shield. But this card file box plus the dial on the front of it, and the crystals, pretty much represent my total cost layout for the receiver, discounting, of course, the parts from those 25¢ transistor radios and a few other parts from my junk box.

I work only CW, mainly because I seem to find that that is where most of the experimenters like myself operate. And because of my leanings toward CW, I have made no provisions to broaden the 350+ cps bandwidth of the receiver. Perhaps another reason is that I don't have room to stuff another switch in that little cabinet (which is already straining at its seams), and I fear with a

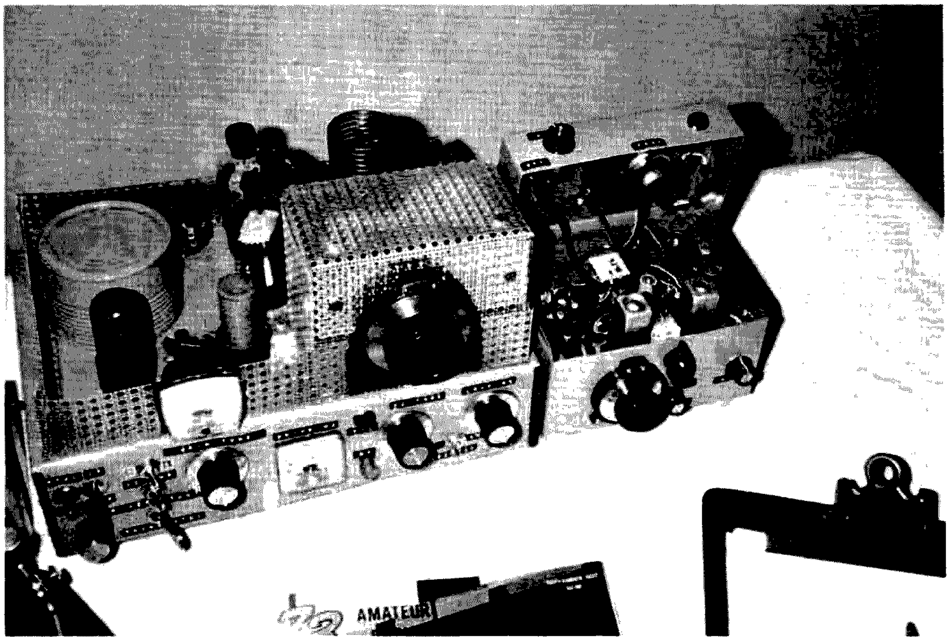

little too much encouragement, it just might let go and scatter about a bushel of parts all over the shack. I realize, of course, that the passband is too narrow for voice, even a little sharp for CW sometimes, and I often get the feeling I am copying code through a tin horn, but it really chops down the QRM.

I have had requests for schematic diagrams of my station, and these requests I have turned down—not that I am ornery, not that ornery—it is just that I doubt if I could draw a schematic of it, for it is so full of trial and error, unknown change, etc. I don't know how, for instance, I could advise the winding of the keying filter choke on a core whose use I did not even know in my old TV or the number of turns I put on it, and I don't cherish the idea of unwinding it just to count them. The rf output circuit is probably overly complex also, and throughout the rig there are clusters of resistors placed in series and/or paralleled to give the right values. In other words, if I could draw up a schematic and attempted to build this station again from it, I have my doubts that it would work.

I recently overheard a conversation in a radio store discussing why in the world anyone would want to spend so much time, worry, and trouble building when the finished product could be purchased from the shelf. I think one of those involved in the conversation pointed a finger at the side of his head and made a circle with it.

Well, I suppose, there are all kinds of us hams. To me, plugging in ready-made gear and talking in an SSB round table would be something I would grow tired of quickly. But putting something on the air that is of my own creation is, to me, 90% of the fun of our hobby; besides, it has been quite an education for me.

Finally, and getting back to the original subject, I hope no one will judge the performance of my station by its appearance. If it sounded like it looks, my General class privileges would have probably been in trouble a long time ago. It is just that good orderliness doesn't seem to be one of my virtues. Besides, it is difficult to make something pretty out of junk parts. And if the lettering shows up on my transmitter in the photo, it will read: "Built from genuine junk parts."

I did, however, try for compactness. Why? I have no idea, unless that seems to be the way they are doing things these days, and that is even a bigger "why" to me. Incidentally, my standard size clipboard is in the photo for size comparison, and I do believe that is the biggest-looking clipboard I ever saw; so, my transmitter is really not all that small.

But my "compact" (utterly congested would be a better description) transmitter and receiver have given years of trouble-free service, thank goodness, and I've received nothing but the best of reports on my signal quality.

So, if this article has given any of you hams who may be potential home brewers any ideas about getting the soldering iron out, good luck to you; be very careful of the high voltage hazards, and if you work 40 meters a lot, you may hear this rig on sometime . . . on CW, of course. ■

Wallace T. Thompson WB5ILK
P.O. Box 26041
El Paso TX 79926

R-X Bridge + Calculator = Vswr

—antenna tuning without QRM

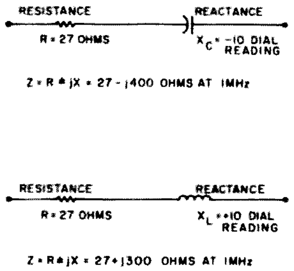

Fig. 1. Series impedance components.

The Palomar R-X bridge[1] is an excellent piece of equipment for amateur station use. It is battery operated, portable, small, handy, accurate when calibrated, and it will give actual impedance and vswr (voltage standing wave ratio) with a little calculation. It is sold as an antenna bridge, but it actually is a more general instrument, being capable of resistance measurements from about 5 to 250 Ohms and reactance values of plus or minus 1200 to 12 Ohms at 1 to 100 MHz. Universal Radio recommends it for Tripole™ owners to check the vswr of their antennas on those frequencies just outside the ham bands where it is not legal for a ham to put a carrier on the air or on the SWL bands. It is also good for everyday use as an impedance bridge and as a double check on your vswr bridge readings. You might be surprised how inaccurate some vswr bridges are found to be.

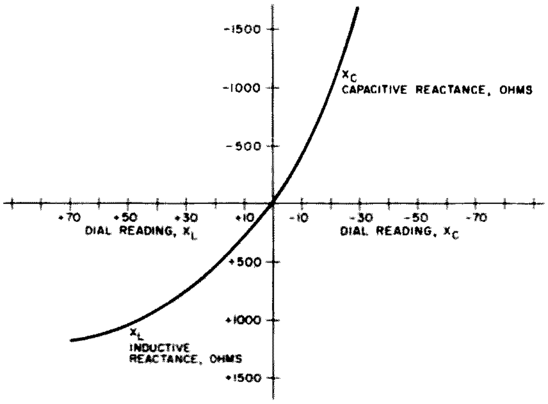

Fig. 2. 1 MHz calibration curve for Palomar bridge.

To get the vswr from a bridge reading of, say, 27 Ohms and -10 pF requires some algebraic calculations. These are not really difficult, but they do become a bit tedious, especially if you are making a point-by-point plot of vswr data. The calculations must be repeated each time a new measurement or adjustment to the antenna is made. You microcomputer buffs will quickly recognize an application for your digital hardware to relate the vswr value to the input data via a short processing program. Most hams, however, do not as yet have a microcomputer, so we seek a less powerful but simpler and lower cost solution. Enter the programmable calculator.

Few of us need to be impressed with the phenomenal progress in hand-held calculators over the last few years. They have improved from simple arithmetic devices to "slide-rule" scientific and programmable units with magnetic card memories. Until recently, programmable calculators have commanded fairly high prices — not as much as the $2000 and up microcomputer installation, but at least in the $200-to-$400 range, which is still a bit high for a casual buy. Recently, a low-cost programmable calculator, the National/Novus 4525, has been sold for less than $40[2] (around $50 with charger and case). So the programmable units seem to have entered the lower cost casual-buy phase. If you have never been involved in programming, would like to start somewhere, and would like a fairly powerful calculator, this unit can give a simple yet good introduction to the procedure of writing special programs to solve repetitive problems. If you are just curious, you can buy both the Palomar bridge and the calculator for less than a hundred dollars and make vswr measurements without putting a signal on the air.

The program given here can process the R-X bridge readings and give you the reactance value, normalized impedance values, reflection coefficient, and vswr value from a Palomar bridge reading in just a few seconds. The two small instruments together make a powerful team. The portability of the R-X bridge allows one to

climb a tower, bridge in hand, and make measurements (a portable receiver is needed, too) directly at the antenna. The vswr may also be measured at the transmitter end of the feedline, as usual. The program itself should also be easily incorporated into some of the more expensive Hewlett-Packard programmable calculators, all of which use the same "reverse Polish" notation and keyboard. For example, the addition of a line 39A, which repeats line 39, allows the same steps to be used on a nonprogrammable HP-35 calculator, deleting, of course, the start and halt steps in the program.

R-X Measurements

The standard instrument for R-X measurements is the Hewlett-Packard 250B R-X meter. This is a large precision instrument which sells for over $3000. It will be found in many engineering laboratories but not many ham stations. The Palomar bridge has less range and accuracy, but, at its $50 cost, it is an ideal instrument for hams. The Palomar bridge indicates in terms of series impedance values, perhaps a bit easier to understand than the parallel values of the HP instrument. For one who wishes to know the actual impedance of an antenna, it gives a reasonably accurate answer, especially when calibrated with known standard resistors and reactances. The Palomar bridge measures resistance and reactance values from 1 to 100 MHz. The impedance reading is that of a series configuration as shown in Fig. 1. The resistance value is easy to comprehend. Resistance means the same thing at high frequencies as it does at dc. In series with the resistance component of a reading is a reactance component. The dial of the Palomar bridge is calibrated for the series reactance readings of zero to ±70 picofarads. Understanding the bridge reading on the capacitive or X_C side (say, -10 on the dial) is relatively easy. The impedance, such as the example in Fig. 1, is a resistance in series with a capacitive reactance of 400 Ohms at 1 MHz or 398 pF. On the inductive or X_L side (say, +10 on the dial), the impedance would be that of a negative 530 pF or 300 Ohms of inductive reactance at 1 MHz. If understanding the fact that a negative capacitance reading gives an inductive reactance value bothers your thinking, then you are a good candidate for using the calculator program which takes all this into account and gives the correct answer each time. The 1 MHz reactance values are given by the calibration curve of Fig. 2. This curve is derived from the design of the bridge, and the equations are the basis of the calculator program. The same curve appears in the Palomar instruction manual.

To determine the reactance value at any frequency, one must divide the value read from the curve of Fig. 2 by the actual frequency of the measurement in MHz. That is, the readings from the curve of Fig. 2 would be divided by 10 if the measurement had been made

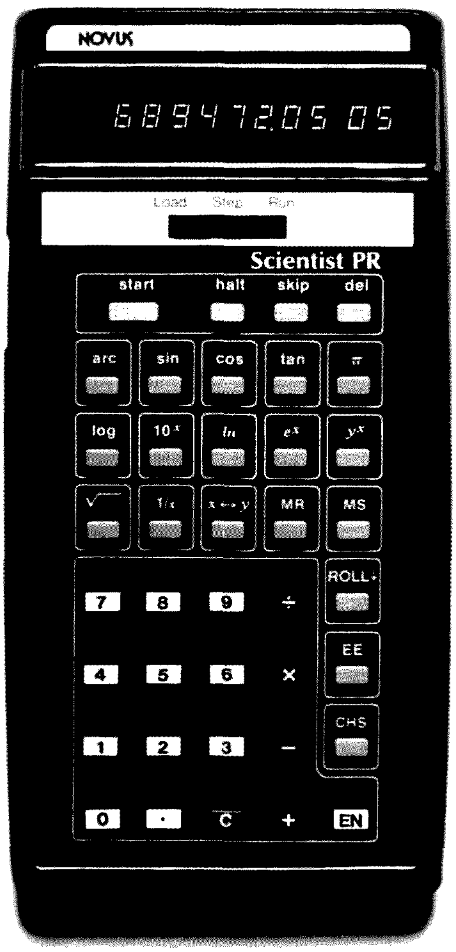

The Novus 4525 programmable calculator.

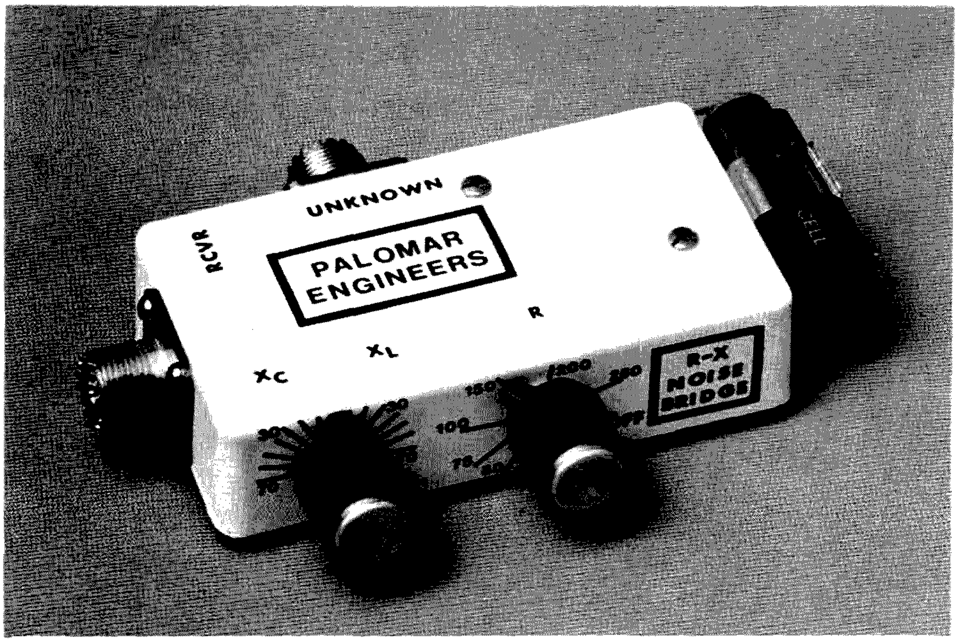

The Palomar R-X bridge.

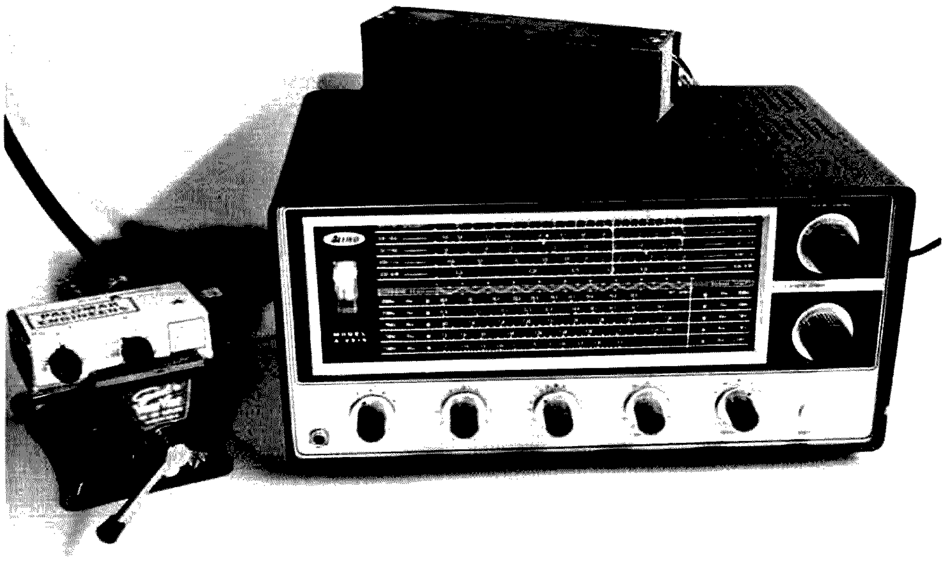

Measuring an impedance with the R-X bridge and a battery-operated receiver.

at 10 MHz. All this takes more time to describe than it does to actually do it. It is a fairly simple procedure to get an actual resistive and reactive value from the readings, aided by the graph.

Calculating the vswr from the bridge reading, on the other hand, is a bit tedious. It is necessary to calculate the normalized impedance values, relative to the transmission line characteristic impedance, the magnitude of the reflection coefficient on the line, and then the actual vswr itself. The same would be true of any impedance bridge, including the aforementioned HP unit. This is really where the calculator program shows its worth. However, since the program is written to speed up the job, it is better to include the steps of actually finding the reactances and eliminate any need to look them up on the graph of Fig. 2. Interpolation errors and errors due to misreading the graph are eliminated, too. So, by entering the dial readings and frequency into the program, the impedance values are given, as is the vswr. For completeness, it will be mentioned that it is also possible to use a Smith chart to get the vswr graphically. It is still tedious, however, and subject to the above errors, especially if you really don't understand a Smith chart very well.

You might think a simple calculator would be unable to properly manipulate the data since, after all, it involves complex numbers in the impedances. The calculator manipulates real numbers only. This turns out to not be a problem in vswr calculation because the vswr may be calculated from the magnitude of the reflection coefficient.

The Program

The instructions in a calculator program are simply the list of those buttons which you push, in the order in which they are to be pushed. The calculator remembers these instructions and executes them automatically in later runs of the program. In a calculator which employs reverse Polish notation, as do the Novus 4525 and HP calculators, there is no equal sign, and you start calculations by use of the EN (enter) button. Much of the program itself is concerned with manipulating and storing the data into positions where it can be used in proper sequence in the equations being solved. These equations are given in Fig. 3, and the program itself is the listing of 90 steps given in Fig. 4.

To load the program into the calculator, put it into "load" mode and key in the program with a dummy variable being used in each of the positions where data will be inserted later. If the program gives the correct answer with the dummy variable, you will know the loading has been performed correctly. Switch to "run" mode, push the start button twice, and the program runs.

Input Data

The program requires three values of input data: the resistance dial reading, the reactance dial reading, and the frequency of the measurement. Initially, the calculator stops with a 68 displayed. You insert the

Equation solved by program		Remarks
Equation 1:	$C_2 = \dfrac{68\,C_1}{C_1 - 68}$	**This solves the value of the unknown series capacitance from the setting of the variable C_1 and the bridge fixed capacitor 68 pF.**
Equation 2:	$X_{C2} = -\dfrac{1}{2\pi f C_2}$	**The reactance of the load is calculated with the standard formula. Note that when C_2 becomes negative, the sign changes and the reactance becomes positive, that is, inductive.**
Equation 3:	$Z_N = \dfrac{R}{Z_o} \pm j\,\dfrac{X_{C2}}{Z_o}$	**The normalized impedance Z_N is the value divided by the characteristic impedance Z_o of the transmission line. In this program, Z_o is fixed at 50 Ohms but may be changed to any Z_o at line 37 when the program is initially loaded.**
Equation 4:	$\Gamma = \dfrac{Z_N - 1}{Z_N + 1}$	**Here, Γ is the magnitude of the reflection coefficient.**
Equation 5:	$\text{vswr} = \dfrac{1 + \Gamma}{1 - \Gamma}$	**Vswr calculation from the magnitude of the reflection coefficient.**

Fig. 3. Equations solved by the program.

	Instruction	Remarks
1.	Start	
2.	68	Bridge uses 68 pf.
3.	EN	
4.	Halt	Stop for first input.
5.	R	Use R=27, dummy variable
6.	MS	first time, otherwise any
7.	x↔y	value of R.
8.	EN	
9.	EN	
10.	EN	
11.	Halt	Stop for second input.
12.	ΔC	Use ΔC = 15, dummy variable
13.	+	first time, otherwise any
14.	EN	value of ΔC.
15.	R↓	R↓ key is labelled ROLL↓
16.	x	on the Novus 4525
17.	R↓	
18.	-	
19.	EN	
20.	R↓	
21.	R↓	
22.	R↓	
23.	x↔y	
24.	÷	Gives C_2 here.
25.	2E-6	Entry is: 2, EE, CHS, 6.
26.	x	
27.	π	
28.	Halt	Stop for third input.
29.	F	Use frequency = 7, dummy
30.	EN	variable first time, otherwise
31.	R↓	any value of F, in MHz.
32.	x	
33.	x	
34.	1/x	
35.	Halt	Display $\pm X_C$ value.
36.	EN	
37.	50	Choose Z_O = 50 ohms here.
38.	EN	
39.	MR	
40.	x↔y	
41.	÷	
42.	Halt	Display normalized R/Z_O
43.	R↓	
44.	÷	
45.	Halt	Display normalized X/X_O
46.	MS	
47.	R↓	
48.	R↓	
49.	EN	
50.	EN	
51.	EN	
52.	1	
53.	-	
54.	EN	
55.	x	
56.	MR	
57.	EN	
58.	x	
59.	+	
60.	√	
61.	MR	
62.	R↓	
63.	MS	
64.	R↓	
65.	1	
66.	+	
67.	EN	
68.	x	
69.	R↓	
70.	R↓	
71.	EN	
72.	x	
73.	EN	
74.	R↓	
75.	R↓	
76.	R↓	
77.	+	
78.	√	
79.	MR	
80.	x↔y	
81.	÷	
82.	Halt	Display reflection coefficient Γ
83.	MS	
84.	1	
85.	+	
86.	1	
87.	MR	
88.	-	
89.	÷	
90.	Halt	Display VSWR, answer with dummy variables is 4.892

Fig. 4. Program listing.

resistance dial reading and push start. It stops again with a 68 displayed, you insert the reactance dial reading (positive for X_L values and negative for X_C values), and push start. It stops with pi (3.1415927) displayed, and you enter the frequency and push start. The dimensions used are Ohms, picofarads (up to plus 68 on the dial), and megahertz. A typical entry would be: 27, 15, 7.

Output

The first output given by the program is the result of the calculation of the reactance value as shown in equation 2 in Fig. 3. This reactance will be positive for inductive impedances and negative for capacitive impedances. It is given in Ohms. The calculator stops with the reactance value displayed, and you may write it down at that time or just go on to the next output by pushing the start button again. For example, with 27 Ohms and +15 pF at 7 MHz, the display reads 60.4 (Ohms).

The next two outputs are the values of the normalized impedances, as shown in equation 3, Fig. 3. These are useful for entry into a Smith chart, if you are using one to design a matching network or some similiar application. The resistance is given first. For the example problem, the output is 0.54, and, after the next push of the start button, it reads 1.208, the normalized reactance value.

The next output is the reflection coefficient magnitude, as given in equation 4 of Fig. 3. It reads 0.66 in the example problem.

Finally, the last push of the start button yields the value for vswr, which is 4.892 in the example.

All of these inputs and outputs may be processed in just a few seconds, much more easily than the pencil and paper method. You learn the bridge and calculator are worth their cost after only a few uses. Also, at current prices, both of these instruments are best buys.

A Listing Form

Fig. 5 is a listing sheet for the program steps. Such a sheet is desirable when writing your own programs or recording others for future use. You not only list the steps but also show the status of the "stack" registers at each step and include remarks about data entry and outputs. It is left blank, so you can copy it on a copy machine and make as many more forms as you wish.

Limitations

The limitations in the calculator program are such that you should not insert a

zero for any of the values of resistance reading, reactance reading, or frequency. If you do, an overflow will result, and the answers are meaningless. The only time this is a problem is when there is a zero reading on the reactance dial. When it reads zero, you should use a very small but finite entry to prevent an overflow. The value 1E-6 is recommended. It results in a very small reactance output, which is then ignored.

Also, the range of the dial readings for reactance is up to 68 pF. The reactance dial reading entered should always be less than 68. All negative entries are less than 68.

If an overflow does occur, no harm is done to the program. Just push the clear button a few times, and continue pushing the start button until the program recycles back to the start. This is recognizable by the return of the display to a reading of 68.

Conclusions

Having the capability of measuring your vswr without putting a jamming carrier on the air makes one feel like a good neighbor, and you can enjoy watching the lights flash as the calculator speeds through its program steps. Using a program such as this enables anyone to do the vswr calculations rapidly and accurately, even if he does not fully understand the mathematics and terminology. This not only makes it fun, but also contributes to better understanding and learning the terminology later. Try it – you'll like it. ■

References

1. Palomar Engineers, Box 455, Escondido CA 92025. The R-X Noise Bridge is sold postpaid for $49.95 via mail-order advertisements in amateur radio magazines.

2. The National/Novus 4525 calculator is sold by: Ildan, Inc., 2901 Sentney Ave., Culver City CA 90230, and TK Enterprises, 16611 Hawthorne Blvd., Lawndale CA 90260. Both these companies sell mail order, and their advertisements may be found in *Scientific American* magazine.

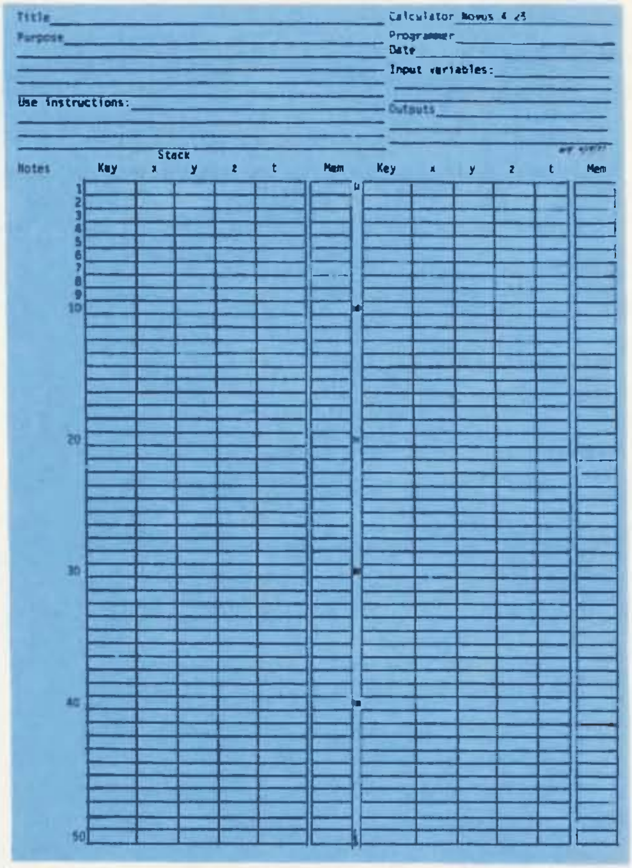

Fig. 5. A program listing form.

High Seas Adventure—Ham Style

—part II

James E. Seidel WA6FEI
1066 N. Westside St.
Porterville CA 93257

As dawn broke on the morning of April 19, 1977, a small blip appeared on the *Trader's* radar. Distance – 16 miles. The passengers could see it from the deck of the ship as it loomed up from the sea like a crouching lion. It was the home of Tom Christian VR6TC, a direct descendant of Fletcher Christian of *HMS Bounty* fame. It was Pitcairn Island.

Photos by Jules Wenglare W6YO

Welcome to Pitcairn, home of the descendants of "Mutiny on the Bounty." Tom Christian VR6TC can be seen in one of the longboats as it is being pulled onto the island for shelter.

For Jules Wenglare W6YO, this would be one of the many stops being made in his 10-month around-the-world cruise. He had left Freeport in the Bahamas on February 15 to adventure into the world's greatest ports of call and to operate amateur radio from the four corners of the globe. He visited and met other hams in such places as Haiti, Bonaire, the Canal Zone, Ecuador, and the Galapagos. When he arrived on Easter Island, Jules met Father Dave Reddy CEØAE, a world renowned ham operator.

Jules was on board the *Yankee Trader*, a 176-foot-long motor-sailer out of Windjammer Cruises, Miami Beach, Florida. The first two months of his around-the-world cruise were covered in a previous issue of *73*. In this part, he goes ashore on Pitcairn Island and has a face-to-

face QSO with one of the most sought-after contacts in amateur radio — Tom Christian VR6TC. Later, stops are made in Tahiti, Cook, Samoa, and even Australia. His adventure-chasing experiences to these exotic ports of call will be covered here.

On the tape I received from Jules on his visit to Pitcairn, he stated: "We finally got into anchorage at Pitcairn Island. Because of bad weather, we were told it would be best to anchor near Young's Rock on the west end of the island about a mile from Bounty Bay. We waited there for a long time before the longboats could get out to us." (The longboats are the only means of entry or exit from Pitcairn. They are diesel powered, measure 38 feet long and 9 feet wide, and can carry up to 5 tons of cargo.) "Two longboats arrived, swung up alongside, and the people began waving.

"After the boats were secured, the people of Pitcairn — men, women and youngsters — began climbing aboard the *Trader* with their bags of wares." (The Pitcairners sell stamps, booklets, carvings of sharks and birds, woven baskets, etc.) "After they were aboard, I went over and asked someone who Tom Christian was. He was pointed out. We talked for awhile, and, at about 11 o'clock, the captain announced that we would now go ashore. It was touch and go getting everything loaded; the sea didn't want to cooperate.

"When we arrived at Bounty Bay, the longboat engines were reversed just before we made the run in. It's very clever how they are so careful in making the run through the surf because the waves are always breaking. If they pick the wrong wave, it could break over the boat and cause it to capsize."

If you read "Pitcairn Island — an inside look at VR6TC," which I wrote for the March, 1977, issue of *73*, you'll know what occurred on June 23, 1972. On that date, a longboat attempted to go out in violent seas and was capsized. Tom broke his right leg and almost lost his life.

"We waited . . . and all at once the motor went wide open and, boy, there we went. It looked like we were riding a wave but had plenty of time to get in before the next wave came. We came in, scooted around the breakwater and then reversed the engine to keep from ramming ashore. Everyone got wet from the splashing water," Jules said, "even before we rushed into the bay."

Most of the cargo was taken ashore, with the exception of a 500-pound generator and the tower from Tri-Ex. These were brought in later. The tower was one that Frank W6KPC of Tri-Ex donated to Tom.

Jules met Andrew Young VR6AY, the first ham operator on Pitcairn (1938). They had worked each other in that same year. Jules said, "It was something meeting him. We had a very interesting conversation. He is a very jovial man."

Tom had his motorbike loaded up with cargo. "So much, in fact," Jules mentioned, "that I didn't think he would have room for me to get on, but he did . . . I didn't think we could get up the hill, but we chugged away. We almost lost our balance a couple of times, but we made it up. We went straight to Tom's home and unloaded.

"I met Tom's wife, Betty, a really pleasant person. I saw their little baby and the three other little girls. Tom then showed me his ham room and the room where I would spend the night."

If you read the March article on Tom you'll remember only three children being mentioned. I knew of the upcoming event but didn't mention it. On March 28, 1977, at 4:40 am Pitcairn time (1310 UT), Tom and Betty Christian became the proud parents of a 7 lb., 4½ oz. baby girl whom they named Darlene Michelle. Congratulations.

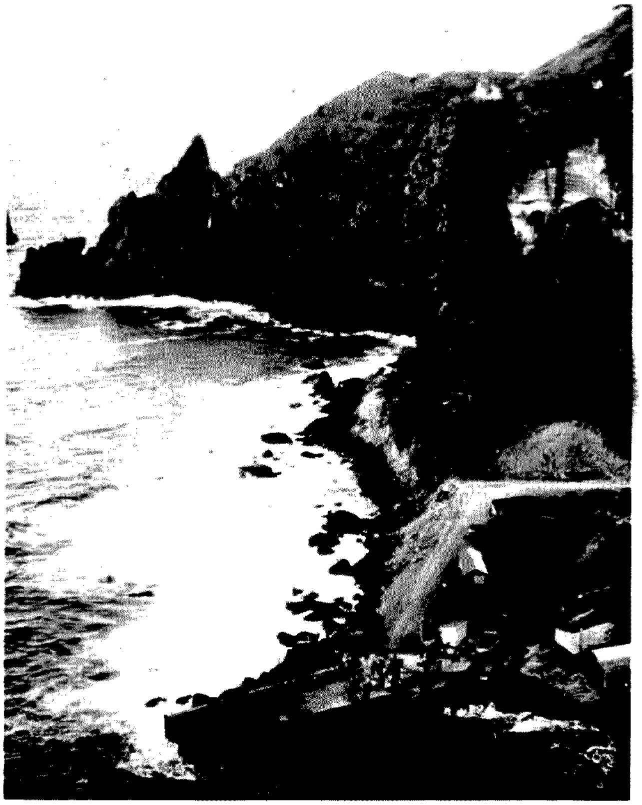

Bounty Bay, the only entrance and exit from Pitcairn Island. It was here on January 23, 1790, that the HMS Bounty *was set afire and sunk. The ship was discovered in January, 1957, in less than 50 feet of water.*

"Tom had to go to the post office," Jules said, "so I rode with him on the motorbike and he dropped me off at the village square. I saw one of the most prized possessions of the island right here in the square — the *Bounty* anchor. It is a real relic.

"I heard a putt-putt-putt and saw Tom coming up past the square. He had a new beam antenna on the bike, driving with one hand and holding this twenty-foot-long box with the other as it was slung up over his shoulder."

A little later, Jules and Tom headed for the island's commercial radio station "ZBP." It is located at Taro Ground, about a mile and a half from the village of Adamstown.

"The station was at a good location; you could see the ocean in practically all directions. It was a sight to behold. The buildings were nicely situated on several acres. Inside the station building was quite an installation of equipment. Most of the gear was in six-foot racks . . . I'm sure this equipment really sings when Tom gets on it. He has a good fast fist, even on the hand key." (Betty is one of Tom's staff members and she, too, operates this station. Her code speed is 25 wpm.)

Jules had received prior permission from Tom and the Administrative Headquarters, New Zealand, to operate amateur radio on Pitcairn.

On April 19 at 2315 UT, Jules made his first contact as W6YO/VR6. It was none other than Frank W6KPC of Tri-Ex Towers. His second contact was Dick W6OV from Jules's home QTH. Jules, Frank, Dick, and myself are all members of the Central

On the left is the first amateur radio operator on Pitcairn (no longer active), Andrew Young VR6AY. Next to him is Jules Wenglare W6YO, with Tom Christian VR6TC to his left. They are aboard the Yankee Trader, *anchored off Pitcairn Island in the South Pacific.*

Valley Radio Club, Inc., in Delano. Even though W6YO/MM and I had worked each other several times, and I was on the air when Jules keyed up for the first time on Pitcairn, I didn't get a W6YO/VR6 contact. I had to leave the air for an appointment after only a few minutes of trying. I guess it just wasn't my day.

Jules worked a VR3, UK9, VK2, FO8, JAs, and many U.S. hams, all on SSB. When he went down into the CW portion, the receiver would go dead. He finally had to give up on CW, temporarily. After supper, he tried the rig again – nothing. "I was set to stay up all night," Jules said, "and work as much as possible, but the propagation was gone; the band was dead. With no 40 meter antenna, there was nothing I could do."

At 1900 UT the following morning, W6YO/VR6 was back on the air. "I was on continuously until I left," Jules said. "But due to conditions, I didn't work much. I had logged 303 contacts in eight hours of operation."

Jules worked SSB and CW on both 15 and 20 meters. He even listened for and CQed Novices only on 15. "The fellows really behaved well," Jules stated, "when I sent directional CQs."

Jules bid farewell to Betty, and he and Tom headed for *Bounty* Bay. "I was the last one to get aboard the longboat," said Jules. "It was a sentimental feeling stepping off, knowing that I was leaving Pitcairn soil."

Back on the *Trader* again, Jules talked to several of the islanders until it was time to leave. The island magistrate gave a little speech, and the islanders sang three songs. Then the captain thanked everyone for their hospitality. Tom and Jules shook hands for the last time and bid farewell. It was a very emotional moment for them.

In Jules's final comment, he said: "Tom's a wonderful person, very generous. Betty is very charming and a wonderful cook. I'll never forget the hospitality that Tom and Betty extended."

Jules and Tom had a schedule set up for the following day, which they made. He said it was a relief to hear Tom, due to the rough seas and entry into Bounty Bay during darkness after the longboats left the ship. He also worked a 4X4 and an EA8, all with good reports.

On the night of April 22, en route to Tahiti, the *Trader* ran into a very bad storm. At 3 am the next morning, the first mate woke Jules and advised him that the captain would like to get some weather reports, if possible.

"I thought 20 meters would be dead at that time of the morning," Jules replied, "but it wasn't. I heard WB9HAK working ZL2NY, broke in, and asked for assistance in WX reports. WBØSQT broke and said he would call the weather control, which he did. Static made it almost impossible to copy and was occasionally wiping out the signals. K4RTA and WA5LEE came on and helped to relay. After a half hour, I finally got the reports which were gathered from the National Weather Service in Kansas City MO. I got the position of the center of the storm, direction of movement, and even what direction to go to get out of it."

That storm front was 200 miles wide, moving at a rate of 23 knots per hour with winds up to 60 knots.

"I am very proud of the ham fraternity who came to the rescue in getting these weather reports to us," Jules said. "It was very gratifying."

As the writer of this article, I believe this incident reflects the true spirit of amateur radio. This dedication so often displayed depicts the value of our fraternity. It makes me even more proud when I tell someone, "I'm a ham."

Talking on one of the tapes about the storm, Jules brought out this: "A 17-foot runabout with a big outboard motor was secured to the stern of the *Trader*. At about 5 am, I came down from the bridge and looked at it for awhile and it seemed to be riding pretty good. I went to my cabin and, shortly thereafter, I heard a big 'crunch.' I went out on the deck and saw that the boat had broken loose and was hanging by only one end. It was partly in the sea, just bouncing up and down. I summoned help and some of the crew members came out, but it was too late. The other end of the steel cable broke and off she went, free into the sea. We lost sight of it very quickly."

I found out from Tom VR6TC, during one of our QSOs, that this same storm hit Pitcairn pretty hard. He said that all transmission lines for the antenna system at "ZBP" were broken loose. The complete roof was lifted up and half of it ended up more than 100 feet away, and some water got inside the

station. Fortunately, no other damage was done to anything else on the island.

The *Trader* finally tied up at the main pier, downtown, Papeete, Tahiti. "We couldn't leave the ship," Jules stated, "until customs made their rounds. Someone came over to me and said a man was looking for me. I went over and here's this husky fellow who said he was Shan FO8DP whom I had talked to before on the air. We talked for awhile and later that evening met again.

"The next day, I went for a walk, and, a block and a half from the ship, I saw this tri-band antenna atop a second story building. I couldn't find a front entrance, so I went around back. I found some people, but they didn't speak English." (When there's a problem, leave it to a ham and he will come up with a solution. Jules did.)

"I said, 'Radio amateur?' This one chap goes, beep-beep-beep . . . beep-beep. I nodded my head yes and he pointed to a door leading inside. After entering, I talked to a woman, who didn't speak much English either. Finally, she called someone and out he came. He said he was Coco FO8BX. I said, 'My goodness, I've worked you many times and we've QSLed.' "

Jules spent some time with Coco working on his rig, which had quit a few weeks earlier. After replacing a few tubes and aligning it, Jules got the rig going again. That night, Jules went to the local radio club meeting and met about a dozen FO8 hams. He said it was a very enjoyable evening.

The next day, Geneclaud FO8EU came aboard the *Trader*. Later, Jules went to his home right up on top of a 900-meter-high mountain, a very nice place overlooking Papeete, with a straight shot in all directions. They checked the bands but found nothing into the States. About 10 pm, they both came back to the ship and Jules game him a QSL card for an earlier contact.

The *Trader* set sail about midnight, and, after two more ports of call, Huahine and Raiatea, and several ham contacts into Europe, Asia, and the Far East, the ship arrived at Bora Bora.

Jules spent several hours there snorkeling and saw some beautiful tropical fish. They were blue, orange, black, and even zebra striped. He said the fish were in abundance; some were almost transparent.

Along with another passenger, Jules took an excursion up a 700-foot-high mountain. "We found these two huge cannons," Jules said, "big 25-foot-long, 7-inch muzzle coastal guns overlooking the harbor. We walked down to an observation point and found the date, April 26, 1942, engraved in concrete. The view down to the village and harbor was absolutely beautiful."

Several of the passengers went to a luau at the Bora Bora Hotel. Jules said that some islanders came right up onto the beach in their outrigger canoes with flaming torches held in their hands. Since it was at night, the scene was even more dramatic.

At this point on the tape received from Jules, he said: "And here's a bit of the local native music." Well, I can't put music here, but I can say it was very beautiful – South Pacific style, with three electric guitars, drums, etc. It was recorded in the Bora Bora Hotel.

After three more days at sea, the *Trader* arrived at Rarotonga in the Cook Island group. After docking, Jules was summoned and introduced to Tuatai ZK1CY who wanted to meet the "ham" aboard. "Tuatai," Jules wrote, "is the island health officer, and he did look it in his neat Bermuda shorts, white socks, and shirt . . . "

Jules showed Tuatai his cabin and radio setup. He later realized that Tuatai was the most popular Pacific Island ham when he was on the island of Manihiki.

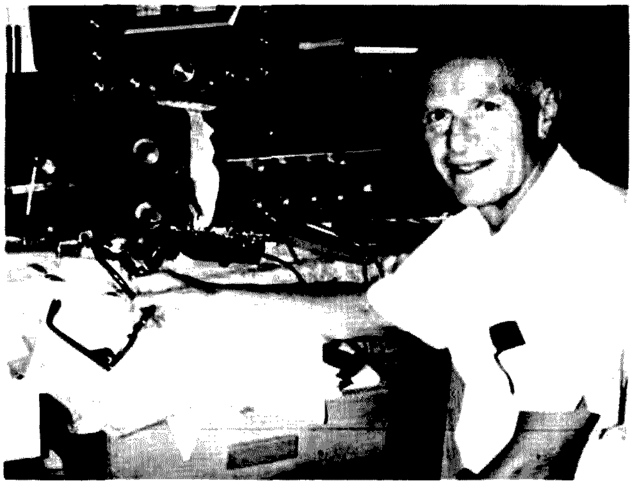

Jules W6YO in the home of Tom Christian VR6TC. He logged 303 contacts using Tom's equipment when he operated here on Pitcairn as W6YO/VR6. Contacts were made using SSB and CW on 15 and 20 meters.

Later, at one of the buildings near town, Jules saw more than a dozen antennas scattered all around. Inside there were numerous pieces of equipment. The installation was that of Stuart ZK1AA, who wasn't there at the time. Jules left his QSL card with a note and headed back into town to eat.

A little later, Stuart found Jules, introduced himself, and said he found the QSL card and had been looking all over town for him. They both jumped on Stuart's motorscooter and headed for the airport. Here, Jules met Trevor ZK1BA and another ham (no name or call given). They and a technician were working on a frequency counter that was giving them problems. Trevor is in charge of the communications and navigational aids department.

Jules spent most of the day with Stuart and later met his XYL, Terenpii. "Their home," Jules said, "is right on the beach on the north coast, a couple of miles from town. The satellite station Stuart operates and maintains is a complex setup of nearly a dozen antennas – yagis, helixes, and even a rhombic, all for VHF communications with the ATS-1 satellite up 23,000 miles above the equator in the central Pacific area."

Terenpii handles the circuit with Suva, Fiji, and other outlying stations as far north as Alaska, the Western Carolines, and back east to Washington, D.C. Stuart has equipment from WWII and is still a firm user of time-proven older tube-type equipment for VHF work.

There's one more item that Jules mentioned that was very interesting. "In their home, Stuart has one of the largest great circle world maps I've ever seen. On their living room floor, inlaid in linoleum, is the map Stuart cut out, with Rarotonga in the middle."

The *Trader* finally set sail for Fiji and Jules got back on the air. "It is something," Jules wrote, "to listen at times in the morning and to hear a few stations coming through, only to be in 4X4 or SV land or some other place on the opposite side of the Earth. These South Pacific places must really have some wonderful propagation."

During one of my contacts with W6YO/MM3, he gave me some information and mentioned an unknown island

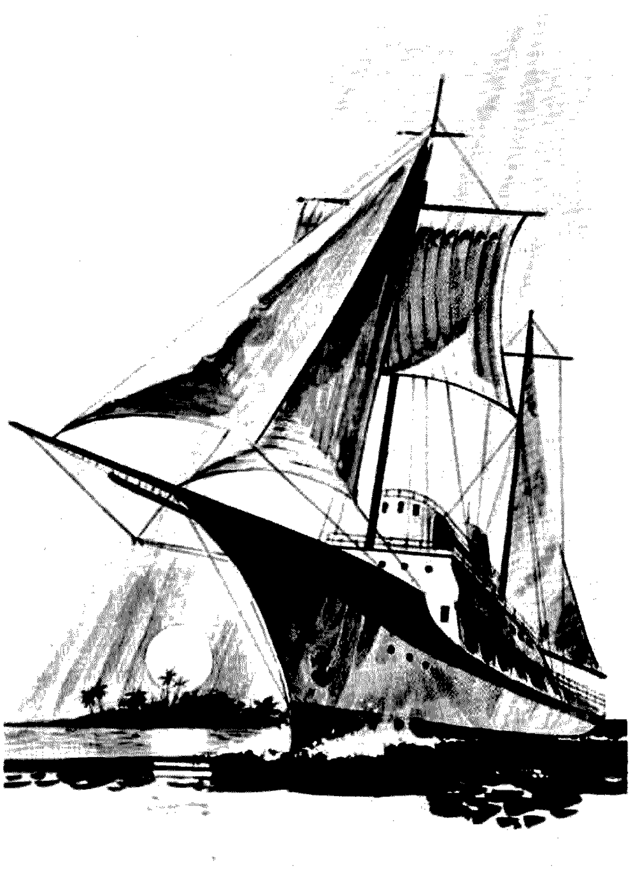

This is the motor yacht Yankee Trader. *Each year she sets sail for a 10-month around-the-world cruise to strange and remote ports of call. For the year 1977, Jules Wenglare W6YO was the "ham" aboard. (Photo courtesy of Windjammer Cruises)*

name. I didn't know where it was, so I asked him to spell it so I wouldn't make a mistake in identification or location. He told me I had better learn where these places were. In a letter received after that date, Jules wrote: "By the way, you'd better brush up on your geography. Any DXer should know these islands without me having to spell them out to you."

As much as I hate to admit it, especially here in print, he's right. And, I now have my second "Elmer." Thanks, OM.

"I was very fortunate to QSO Rod 3D2RM and Dale 3D2DM a few days prior to our arrival at Fiji. Rod was helpful in advising the Port Captain of our arrival and other pertinent information.

"Raj 3D2ER met me at the dock at Suva, Fiji, and graciously drove me around to see their large satellite and communications system. The 80-foot satellite dish and what's under it was most interesting and educational. Raj," said Jules, "is a very knowledgeable engineer for cable and wireless . . ."

Jules visited with 3D2RM and his XYL, Lou. "He speaks seven languages," Jules said, "including Russian. He taught English before his assignment as a linguistics professor at the University of South Pacific, Suva."

One morning aboard the *Trader*, Jules had breakfast with Dale 3D2DM, a Yank working for the Peace Corps. "He spends time," Jules said, "teaching natives the care and maintenance of outboard motors."

Jules also met Upali, a 4S7 ham from Colombo, Ceylon. Jules said, "With his beautiful hilltop location and knowhow, he should become a big signal from Suva."

Before leaving Fiji, Jules was the dinner guest of Rod, Raj, and Upali. He said he had great praise for their lovely wives and children.

Captain Paul Maskell, Master of the *Yankee Trader*, had sailed his ship more than 10,000 miles before he brought her into port at Pago Pago, American Samoa. This would be the first port Jules could operate in other than Pitcairn.

After meeting Larry KS6DV at the pier, he met his XYL, Uti KS6FO. Both were to extend an ultimate offer of hospitality.

"They were wonderful," Jules wrote. "Larry let me operate his station right across the highway from the beach, four miles out of Pago Pago. Larry's ham shack is really a den, with a well-stocked bar, lounge, radio gear, 2-meter stuff, and loads of extra equipment, all in a paneled, blue-carpeted basement room. It was the first time in my life I had three drinks at once in front of me while working the gang back in the U.S.A.

"Their choice for dining out was the best place in Pago Pago – Soli's. The seafood dinner with wine was great. The four-piece band and smooth music added to the unique local charm and atmosphere."

While Jules was here on the island, he wanted to take a ride on the cable car that goes across the whole bay of Pago Pago up to a height of 1700 feet. When he got there, it was learned that they had experienced a power failure and the car was stuck midway across. Inside were a couple of the *Trader* passengers. They were suspended for over an hour before being rescued. Unfortunately, Jules didn't get to take this very scenic ride.

Before the *Trader* left, Larry and Uti spent some time aboard ship visiting with Jules. They received a guided tour and saw the "ham headquarters" Jules uses in cabin 25 to work the operators around the world before he arrives there to meet them.

Jules didn't give too much information on his next few stops other than whom he met. On Apia, Western Samoa, he met Phil 5W1AU. When the *Trader* arrived on New Hebrides, Jules met Ken YJ8KM and his XYL, Marg. Later, he met Jock YJ8JH.

When Jules arrived in the Solomon Islands, he said, "It was great to receive permission to operate ashore from VR4-land." Wes VR4DX let Jules use his station, but the propagation wasn't very good. The two of them stayed up until 2 am chewing the fat and drinking tea. Jules also met Dick VR4DH and Barry VR4BT.

When the *Trader* dropped anchor at Port Moresby, New Guinea, Jules took a side trip by air to Australia. There he operated from the stations VK2AOK, VK2AHA, and VK2XT.

"While staying with Harold VK2AHA," Jules wrote, "he had me make two tapings at the broadcast station where he and his son, Allan, are on the technical staff. One tape was an interview regarding my recent visit on Pitcairn Island with Tom Christian VR6TC. Another tape was for the Hunter Branch of the Wireless Institute of Australia, Newcastle, N. S. W., Amateur Radio Club."

Jules spent some time in Sydney, Newcastle, Ipswich, and Gold Coast, Queensland. He met some more hams, such as VK4KO and VK4MW. After catching the *Trader* in Darwin, Australia, he set sail for Bali, Indonesia.

In issue #7 of the *Trader Tales* (the newsletter printed aboard ship), Jules wrote an article. Here is part of it:

> *Maritime Mobile.* "This is the designation used by hundreds of amateur radio operators who utilize their as-

signed radio call letters when transmitting aboard any type of floating vessel. . . .

"As of July 4th, aboard the *Yankee Trader*, I have made over 125 phone patches for 48 of the passengers and 2 crew members, logging over 500 hours on the air during 1600 hours at sea and several ports of call.

"Official permission was granted to use my callsign on the 5th day side trip in the Galapagos Islands, also at Pitcairn, New Hebrides, Solomons, Papua, New Guinea Islands, and Darwin, Australia.

"Some 1550 contacts, mostly on single sideband and CW, have been made (including 300 ashore on Pitcairn) with 70 countries; the majority were with the United States. One contact was with a ham station at the South Pole.

"Also I have had eyeball (meeting a ham in person) contacts with 56 radio amateurs at their homes and radio clubs.

"The best known hams I met were Tom Christian VR6TC on Pitcairn and Father Dave Reddy CE∅AE on Easter Island."

At 1742 hours on July 5 – after sailing some 15,237 miles since leaving Freeport in the Bahamas – the *Trader* anchored off Benoa Port, Bali, Indonesia.

One of the things Jules did here was see the "Ketchak" (monkey) dance, a Hindu dance depicting one of the stories of this country. He also, by way of a very narrow road, journeyed to the rim of Mt. Batur, a volcano. Lake Batur, about two miles in length, is inside this large crater.

Jules spent about a week here on Bali and took in many of the sights and attractions on this very colorful island. There were people everywhere, with dozens and dozens of them selling carvings and souvenirs. "It was almost impossible," Jules said, "to get away from them." But he did, only after adding some souvenirs to his own collection. He even had time to do some more snorkeling at one of the beaches.

Every time Jules went anywhere on Bali, he looked for a ham antenna but had no luck. There were no hams to be found.

For Jules Wenglare W6YO, the 5 months to that point had been a "ham paradise" aboard the *Yankee Trader* on this 10-month around-the-world cruise. He met many people in amateur radio during stops at exotic ports of call along the way. But, we've got a long way to go before the list is complete.

The following is an excerpt from a tape recording made of several hams when Jules was in the home of John Lamar 4S7JD. All will appear in part 3 of this story.

"Good evening, friends. This is 4S7 Victor George, and we are having a very fine time with old man Jules here. I would hope to meet many of the boys on the air soon. 73 and wishing you eyeball from Sri Lanka. 4S7VG, off."

When the Trader docked at Male, Maldives, Jules was told by customs that no transmissions of any type were allowed from the island or from a ship in the harbor. This didn't stop him from trying to obtain permission to operate amateur radio from here. He went to the Director of Communications and . . . well, when you read the next installment, the whole story of 8Q will unfold.

See you next time with W6YO, when the *Yankee Trader* drops anchor in Singapore. ■

Paul A. Lilie
Box 995
Arecibo, Puerto Rico 00612

"Look What Followed Me Home!"

—a PET of your very own

About four years ago, the company I worked for bought a desk-top computer which had BASIC on ROM, a line printer, and 8K bytes of RAM. It was a superb machine and soon paid for itself in saved time-sharing charges. It cost $13,000. From the first day I saw it, I have been looking for the same sort of thing at a personally-affordable price. About a year and a half ago, I began seeing news releases about a personal computer to be introduced by Commodore Business Machines.

If I could believe half of what I read, the new machine, called a PET, was just what I'd been looking for. It was going to be a desk-top computer, self-contained, with a full keyboard, built-in-cassette, 40 x 25 character display, 8K BASIC on ROM, 4K (8K optional) of RAM, and many other goodies.

The first announcements predicted a $500 price and "midsummer" deliveries. By midsummer, the price had gone to $595 ($795 for the 8K option) and delivery was "90 days." One of the guys I work with brought back some literature from a computer show which included an order form. On July 25, 1977, I summoned up my courage and $595 and sent in the order.

The 90 days came and went and several letters came from Commodore, keeping me informed of delays. Having witnessed a few new-product introductions from the inside, I was not surprised at the frequent revisions of the expected delivery date. In November, they announced that they were going to concentrate on getting out the 8K versions first and offered to let me order the more expensive version. I hung on grimly to my original 4K order and finally my patience was rewarded.

I seemed to hear the faint jingling of sleigh bells as I drove down to pick up my package on Christmas Eve. It had been a long wait, but I was sure it would prove worthwhile.

The machine was packed very professionally with molded foam supports and lots of "crush space" in the heavy cardboard box. I pulled it out, plugged it in, and turned it on (after finding the switch, which is located on the back panel, safe from accidental turn-offs). After waiting a few seconds to warm up the CRT, there it was:

```
***COMMODORE BASIC***
3071 BYTES FREE
READY
```

The cursor blinked invitingly. I dived for the instruction book and came up almost empty-handed. The only book was a small "temporary" pamphlet which did little more than list the BASIC commands and statements. The user who is unfamiliar with BASIC will need a good instruction book to learn from. The "real" booklet, which came a few weeks later, also assumes that you know BASIC, but lists a number of suitable introductory books on its last page.

Since I knew enough BASIC to get along, I was soon programming away like mad. It was kind of fun to find out for myself some of the things the manual didn't mention. I've had the PET for almost a year now, and am still finding cute things to do with it. I think it's just great. Commodore can't fail to sell these things as fast as they can turn them out.

It seems to me that when future historians talk about the computer revolution, they will date its beginning from the introduction of the PET. This kind of self-contained machine is what will bring personal computing power to the public. To paraphrase somebody or other, "I have seen the future—and it RUNs!"

Let's talk about the PET in a little detail. First we'll look at the hardware.

The case is fabricated from steel, with flat, planar surfaces instead of the curved ones of the plastic case. It looks very good

and rather expensive. I imagine (on the basis of absolutely no hard knowledge) that Commodore has had production or supplier problems with the plastic cases and is using metal only as a temporary measure. Four screws under the edge of the case are easily removed to give access to the "innards." The keyboard and display hinge up and a handy built-in prop keeps them from falling back down while you're working inside.

The cassette recorder utilizes the housing and mechanical components from an ordinary cassette recorder. The case is still marked "condenser microphone" where the mike used to be. The cable attaching the cassette to the computer PC board is a bit short, and should be disconnected before opening the case fully. The early literature promised a "cassette drive modified by Commodore for much higher reliability. . . ," but it just looks like an ordinary drive to me. The standard electronics has been replaced by a Commodore circuit board, and *that* certainly looks more reliable than the usual solder-blobbed phenolic PC board.

The power supply looks simple and rugged, but I have made no tests and have no idea whether it will also supply power for accessories. I would guess not, since none of the accessory connectors seem to have power supply connections.

The video unit is enclosed in its own housing at the top of the computer. The only control is for brightness, and it is accessible from the back of the cabinet. The display is sharp, clear, and flicker-free. It is usually one of the first things mentioned by people seeing the PET for the first time.

The computer itself con-

Photo 1. External appearance of the PET, showing keyboard, cassette, and display.

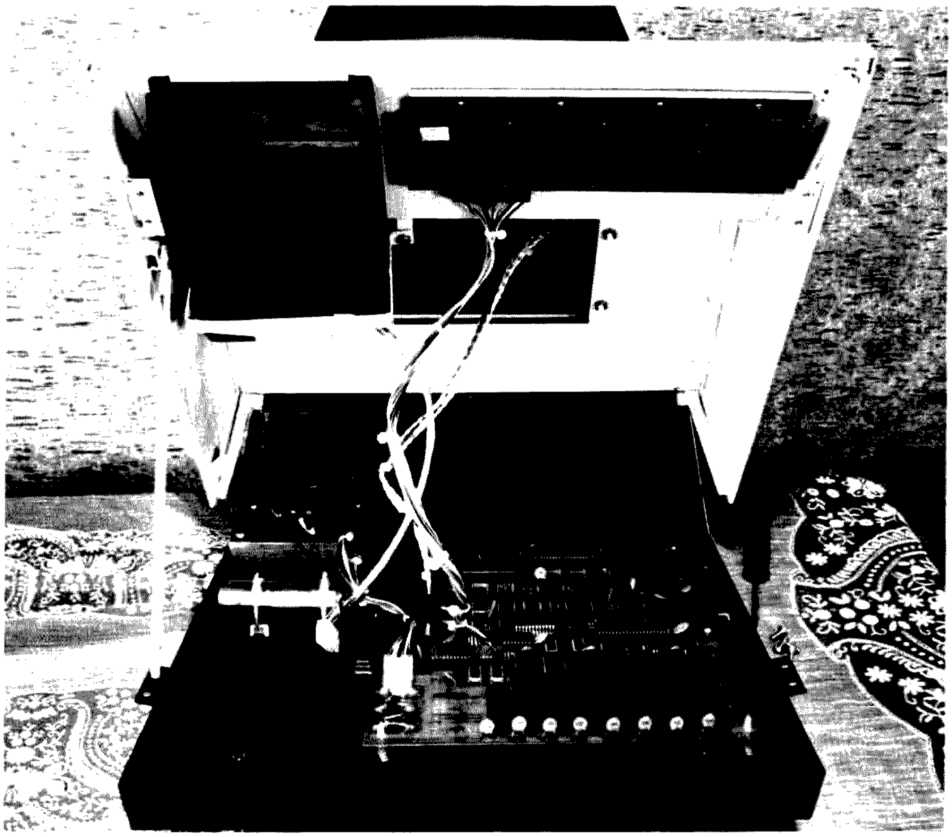

Photo 2. View of interior case. Note single-board CPU, simple power supply, cassette recorder mounted by a bracket, and general ease of access.

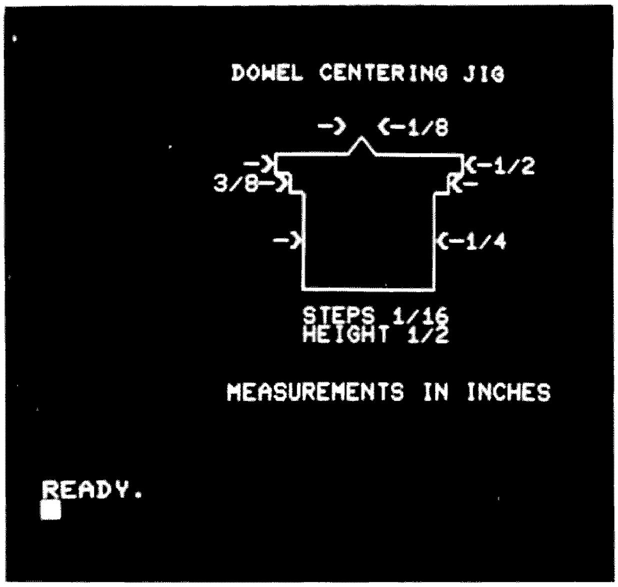

Photo 3. Sample of PET graphic capability. Courtesy of Paul Davis.

sists of one PC board holding about 70 integrated circuits, of which a surprising (to me) number are ordinary 74LS-series. The microprocessor is a MOS Technology 6502. (MOS Technology is now owned by Commodore.) There are two 6520s, a 6522, and 8 ROM chips. Seven of the ROMs make up the 14K bytes of ROM programming, while the eighth, all by itself away from the others, must be the character generator for the display. The RAMs are eight MPS6550 chips at the front edge of the board. On the 8K version, there would be 16 of them, and the sockets for the other 8 are already there on the 4K machine. The instruction booklet suggests a method of locating the bad chip if you should have memory trouble. When the machine is turned on, it will print a message giving the number of bytes of RAM available. If a chip is bad, that chip and all the ones at higher addresses will not be counted. By noting the number of bytes available and exchanging chips, the bad one can be quickly located.

Photo 4. Video display showing sequence of operations to load a program "DCJ." Programs preceding it on the tape are listed, but not loaded. Sequence is fully automatic after user presses "PLAY."

Along the back edge and right-hand side of the board, pins are brought out through the cabinet to connect external devices. Across the back are a second cassette interface, a 24-contact parallel user port, and an IEE-488 interface. The connector on the side is a 40-contact memory expansion port.

The IEE-488 bus is a unique feature of the PET and should make it very attractive to industry. Also known as the GPIB and HPIB, it is a standard means of interconnecting controllers (such as computers) and instruments (such as programmable counters and digital voltmeters) so that an endless variety of automated test setups can be made by simply connecting the proper instruments to the bus. All the programming, sequencing, calculations on measured data, go/no-go decisions, and so forth can then be made by the controller, which is programmed quickly and simply, often in BASIC. Almost every instrument introduced in the last few years can be supplied with IEE-488 bus capability.

The bus has dedicated lines for addressing up to 15 devices. Data is transferred over another eight parallel lines, a byte at a time. Most of us don't need (and can't afford) the kind of test equipment used with this bus, but there's no law that says you can't have a printer or high-speed tape reader designed to work with the bus.

The memory-expansion connector has enough select lines to address 44K bytes of memory (100 through BFFF).

The quality of materials and workmanship seems to be quite good, especially for an early production unit. So far, I have found only one manufacturing defect. When it arrived, the keytops for C and D were reversed. These are printed aluminum squares glued to the tops of the keys. D was loose and easy to remove, but C took some prying. I pressed them back in their proper places and the adhesive seemed to hold. They have held in warm, humid conditions with no sign of loosening, and I have stopped worrying about them. I thought I had another problem when the clear plastic sheet covering each keytop began peeling off, but the booklet explained that it was just for protection during shipping and is supposed to be removed by the user.

So far, I have refrained from saying anything about the keyboard. People are either indifferent to it or they hate it. I hate it. It is nicely made, QWERTYUIOP and so forth are in the right place, but it is *too darn small.* There isn't enough room for your fingers to go where they should. You cannot touch-type on it. If you hunt and peck, it doesn't make much difference, but I believe everyone (especially computer nuts) should be able to type.

The keyboard is a matrix type, laid out as 10 x 8 lines. It would be very easy to connect a full-size keyboard in parallel with the original, so you could type on the full size and do graphics on the original.

Let's move on to the software. Fig. 1 is a rough map of the memory.

The instruction booklet

gives no hint on how to use the machine-language monitor or the diagnostics.

The more I use the PET's BASIC, the better I like it. Calculations seem to be made to 10 significant digits, then rounded to nine for display. The largest number it will handle is about 10^{38}, the smallest positive number is about 3×10^{-39}. Floating-point, integer, and string variables can be used.

A complete list of the BASIC commands would be too long to print here, so Fig. 2 just mentions some that I find interesting.

Arithmetic functions are: ABS, ATN, COS, DEF FN, EXP, INT, LOG, RND (generates random numbers), SGN, SIN, and TAN. Trig functions are all in radians. If x is in degrees, use, for example, SIN(π*X/180).

Other commands are: PEEK, POKE, ON. . .GOTO, LEFT$, MID$, RIGHT$, and LEN.

Logical expressions, such as (X>Y) or (A AND NOT C), are given the value 0 if they are false, and given the value −1 if they are true. It seems like 1 would have been more "logical" for true, but that's not the way it is. This feature can be used in the following way: Suppose you want to go to line 1300 if A equals 0 and line 1330 otherwise. You could write: 1200 GOTO (1330 + 30* (A =0)).

Several "benchmark" programs have appeared which have been run and timed on various computers. Included in the list is a prototype PET. I ran the same programs on mine, and they all ran about 10% slower than the times given for the prototype.(With its built-in clock, the PET can be made to very neatly time itself.) I am happy with the speed. One observer (who is in a position to know) told me that it ran faster than a PDP-8.

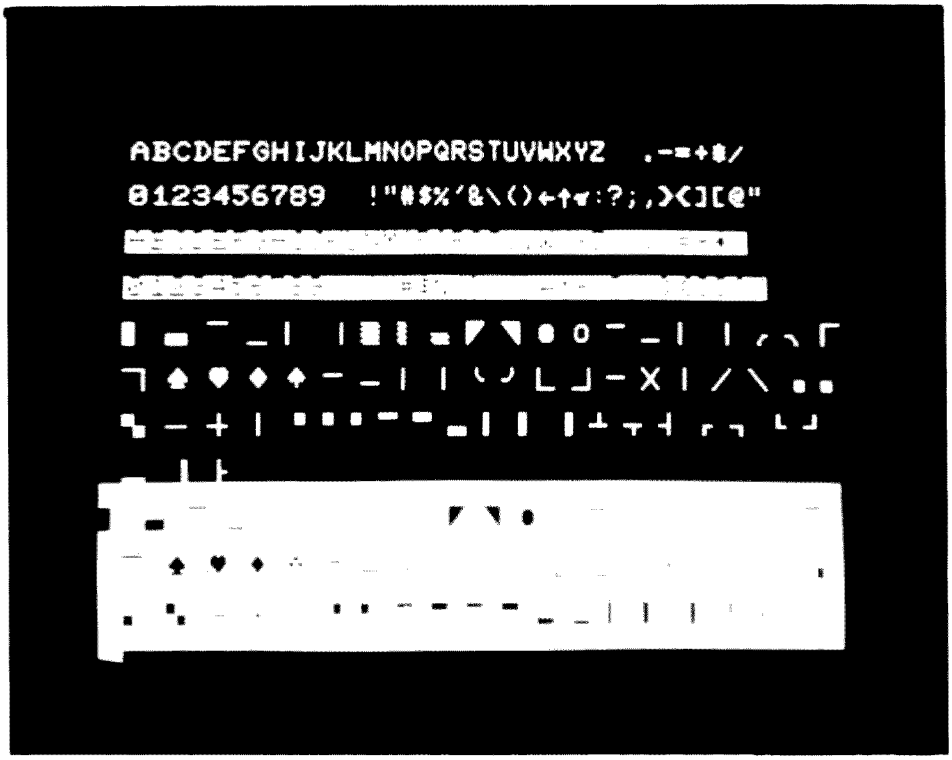

Photo 5. Display of the PET character and graphic symbol set.

The command PRINT is abbreviated by ?, which is a real time-saver when writing programs. When the program is LISTed, PRINT is printed out in full. By using ?, it is possible to use the PET as a scientific calculator. When you type ? followed by an arithmetic expression, hitting RETURN causes the value of the expression to be printed. For example, ?5 − 3 RETURN causes 2 to be printed.

If you have hit STOP in the middle of a program and want to find the values of certain variables at that point in the program, say X, X1, and C, just type ?X, X1, C RETURN and they will be printed out. Then type CONT and the program continues from where it stopped. Great for debugging.

Editing lines is very easy. The cursor moves up, down, forward, and back on the screen. When the cursor is positioned at the error you want to correct, you can change a character, delete it, or insert new characters at that point. When the line is correct, hit RETURN and the corrected line replaces the old one in memory. To delete an entire line, just type the line number and hit RETURN.

The screen has what I call "semi-graphic" capability. There are "characters" based on the 8 x 8 dot matrix which consist of lines, blocks, arcs of circles, and so forth. By printing these characters in the proper order, a surprising variety of pictures can be drawn on the screen. It's easy to lose yourself for hours at a time drawing things on the screen—the "Etch-a-Sketch™" syndrome. Though not nearly as flexible as a good graphic capability, this seems to me to be a very good compromise—you get quite a lot of capability for little extra cost.

The cassette has several good features. Programs and files can be SAVEd and LOADed by name. If you ask it to LOAD "CAL1," it will search past CAL and CAL12 until it finds CAL1. It will note on the screen in passing that it FOUND CAL and FOUND CAL12.

Unfortunately, the computer cannot control the cassette except to stop the motor. When you ask it to LOAD, it will tell you to PRESS "PLAY" ON TAPE # 1. The tape will then be searched at regular playing speed until the desired program is found. If the program is at the wrong end of a C60 cassette, you could wait a half hour for it to be found. If you started searching at a point on the tape *after* the program you want, you could wait forever, since the machine will search to the end of the tape and then just sit there with the motor stalled. If you have more than one program on the tape, it's fairly easy to start searching in the wrong place since there isn't even a tape counter to give you a hint of where you are. The problem of what to do

Location	Contents
0000-0FFF	User's BASIC text and variables, cassette buffers, operating system working storage
1000-1FFF	User's BASIC text and variables (8K version)
2000-7FFF	Expansion RAM
8000-83E7	Video display RAM
9000-BFFF	Expansion ROM
C000-DFFF	BASIC ROM
E000-E7FF	Screen editor ROM
E800-E8FF	I/O and expansion I/O
F000-FFFF	I/O, diagnostics, and machine-language monitor ROM

Fig. 1.

when you have program A in memory and want to record it on a tape that already contains program B is almost too horrible to discuss. There doesn't seem to be any way to find out where B ends (so you don't inadvertantly let them overlap) except to go play it on an audio cassette player and listen for the end of the noise.

In summary, I can only find three things to gripe about on the PET. They are the keyboard, which is a matter of personal taste and can be replaced easily, the cassette file-searching system, which may not be that bad compared to other microcomputer cassette interfaces (I'm not familiar with them and I'm judging it against the $13,000 job), and the documentation. I know it's a new product, and I know the documentation is always the last part of a job to get done, but it seems to me that a machine that is projected toward fairly-sophisticated users (machine-language accessibility, etc.) ought to come with some machine-language documentation. How hard could it have been to throw a 6502 programming manual and a 6500-series hardware manual into the shipping box? You get them if you buy a KIM, and that costs less than half as much.

On the other hand, I can find hundreds of things to rave about. The PET is just a great machine. But the best thing about it, I think, is the way it was done. (Just let me get up on this soapbox, here.) The PET was done *right*. The people responsible for the concept made the decision to build a *real* computer that would be useful in a wide variety of ways, that would not be easy to outgrow. Compare it to the other approach to a mass-market computer—the $250 programmable TV game with the $20 cartridge that turns it into a four-function calculator. I like what that says about the way the PET people look at things. ■

FRE	Returns number of bytes of available memory.
SYS X$	Complete control of PET is transferred to a subsystem located at the hex address contained in the string X$.
TI$	Crystal-controlled real-time clock.
USR	Transfers to a program whose address is at locations 1 and 2.
POS	Gives position of cursor on screen.
VERIFY	Checks the program just recorded on cassette against the version still in memory.
CHR$(N)	Returns the character corresponding to ASCII code N.

Fig. 2.

Neil Schneider
9434 Ironwood Lane
Des Plaines IL 60016

A Hex on Your 8223

—space-saving magic

Editor's Note: Since this article was written, Fairchild has developed the 9368, a chip which accomplishes the segment encoding described in this article—but which will not encode the decimal point for accent.

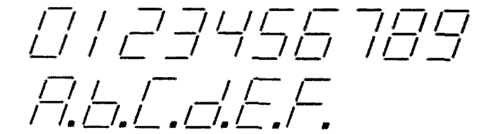

Table 1. Human readable hex characters are possible with 7-segment displays. The decimal point is used to accent alpha characters.

A4	A3	A2	A1	A0	p B7	g B6	f B5	e B4	d B3	c B2	b B1	a B0
0	0	0	0	0	1	1	0	0	0	0	0	0
0	0	0	0	1	1	1	1	1	1	0	0	1
0	0	0	1	0	1	0	1	0	0	1	0	0
0	0	0	1	1	1	0	1	1	0	0	0	0
0	0	1	0	0	1	0	0	1	1	0	0	1
0	0	1	0	1	1	0	0	1	0	0	1	0
0	0	1	1	0	1	0	0	0	0	0	1	0
0	0	1	1	1	1	1	1	1	1	0	0	0
0	1	0	0	0	1	0	0	0	0	0	0	0
0	1	0	0	1	1	0	0	1	0	0	0	0
0	1	0	1	0	0	0	0	0	1	0	0	0
0	1	0	1	1	0	0	0	0	0	0	1	1
0	1	1	0	0	0	0	0	0	0	1	1	0
0	1	1	0	1	0	0	1	0	0	0	0	1
0	1	1	1	0	0	0	0	0	0	1	1	0
0	1	1	1	1	0	0	0	0	1	1	1	0
1	0	0	0	0	0	0	1	1	1	1	1	1
1	0	0	0	1	0	0	0	0	0	1	1	0
1	0	0	1	0	0	1	0	1	1	0	1	1
1	0	0	1	1	0	1	0	0	1	1	1	1
1	0	1	0	0	0	1	1	0	0	1	1	0
1	0	1	0	1	0	1	1	0	1	1	0	1
1	0	1	1	0	0	1	1	1	1	1	0	1
1	0	1	1	1	0	0	0	0	0	1	1	1
1	1	0	0	0	0	1	1	1	1	1	1	1
1	1	0	0	1	0	1	1	0	1	1	1	1
1	1	0	1	0	1	1	1	1	0	1	1	1
1	1	0	1	1	1	1	1	1	1	1	0	0
1	1	1	0	0	1	1	1	1	1	0	0	1
1	1	1	0	1	1	1	0	1	1	1	1	0
1	1	1	1	0	1	1	1	1	1	0	0	1
1	1	1	1	1	1	1	1	1	0	0	0	1

Table 2. 8223 PROM encoding data for hex-to-7-segment decoder.

Hex smex! It seems that hex notation is the national language of microprocessors. This is understandable, with two hex digits fitting neatly in an eight-bit byte. But oh, my head, after about ten minutes of converting front-panel binary into hexadecimal. The obvious solution is a hexadecimal front panel. A hex keyboard is no problem, but the hex display is another matter. It's better to have a little skull sweat in the design stage than the long hours of headache during program debugging.

A few minutes of checking prices on hexadecimal readouts proves that their use can be rather expensive. Being the miser that I am, seven-segment displays seem to be the only practical way to go. While most BCD-to-7-segment decoders have unique patterns for the representation of the numbers from 10 through 15, these patterns are almost as difficult to memorize as the binary LED patterns. A little special encoding is required to represent the letters A through F in a human

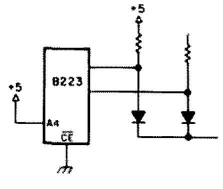

Fig. 1. Output connection for common cathode displays.

readable form. Table 1 shows the proposed character representations for 7-segment displays. These characters are further encoded with the decimal point active for A through F to accent these unusual patterns.

Try as I might, I could not find a standard encoder that so much as comes close to such a pattern. Normally, this situation would call for a 4-to-16 decoder and a handful of diodes to implement such a character generator, but space considerations in my application require a different approach. What is required is a hex-to-7-segment decoder/driver.

8223 to the Rescue

The 8223 is the ideal PROM for such a circuit. Its eight outputs provide control for all segments, including the decimal point. Decoding hexadecimal data uses only 16 of the 32 memory words available in the 8223. By inverting the data for the second 16 words, the encoder is able to drive low or high active 7-segment displays. A0 through A3 define the hex input data, while A4 selects the type of display. With A4 high, the outputs are active high for driving common cathode displays as shown in Fig. 1. Fig. 2 details the common anode connection with A4 active low. Programming code for the 8223 PROM is shown in Table 2. Now, all that is required is some enterprising person to make such an item for off-the-shelf delivery. ■

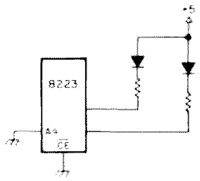

Fig. 2. Common anode connection.

✓ Reader Service—see page 323.

The Micro Maestro!

Sam Creason K6EW
2940 Arlington Ave.
Fullerton CA 92635

There are any number of digital processes which can be used to generate musical notes. In a recent article in *Kilobaud*, Ken Winograd presented an interesting and inexpensive approach to the problem. A microprocessor (uP) is used to control the timing of a frequency generator circuit. The output of the circuit is a lightly-filtered square wave with a fundamental frequency which corresponds to that of the desired note. The square wave is turned full on for the entire duration of a note and then it's turned full off. Such a device is very entertaining and a lot of fun to use, but it does have some limitations. What's described in this article overcomes some of those limitations.

To begin, let's note that the switched square wave which is output from Winograd's device is a rather good choice for a waveform. One of the characteristics of a musical note which makes it interesting to the ear is its harmonic content, and a square wave is rich in harmonics. If we examine any periodic waveform, we'll find that we can describe it as the sum of a set of sine waves of different frequencies and amplitudes. A square wave, for example, is made up of a sine wave at the fundamental fre-

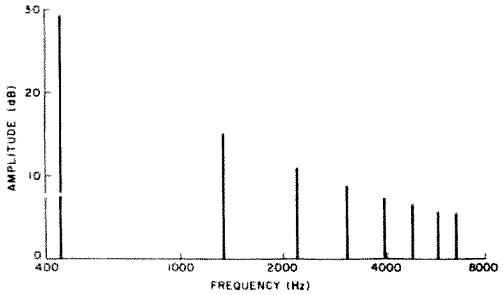

Fig. 1. Spectrum of square wave, showing first few harmonics. Fundamental frequency is 440 Hz.

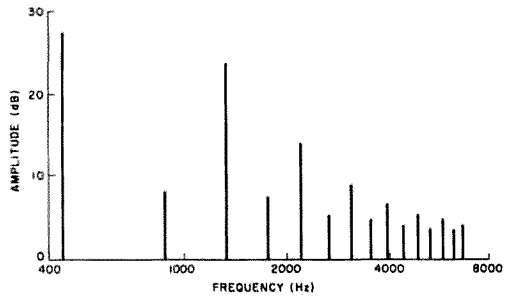

Fig. 2. Spectrum of steady-state sound from a clarinet, showing major harmonics. Fundamental frequency is 440 Hz.

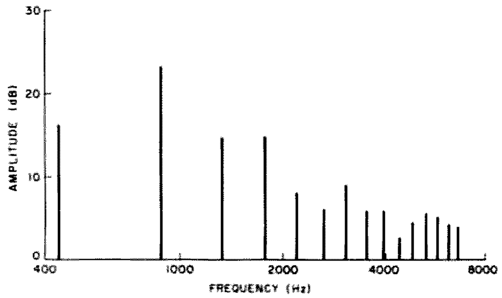

Fig. 3. Spectrum of steady-state sound from a trumpet, showing major harmonics. Fundamental frequency is 440 Hz.

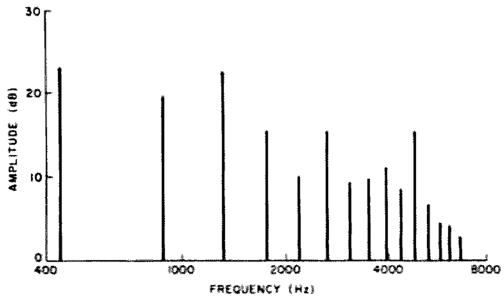

Fig. 4. Spectrum of steady-state sound from a violin, showing major harmonics. Fundamental frequency is 440 Hz.

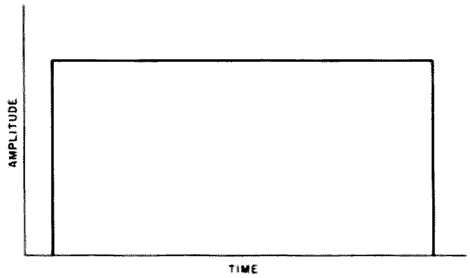

Fig. 5. Envelope of an abruptly-switched note.

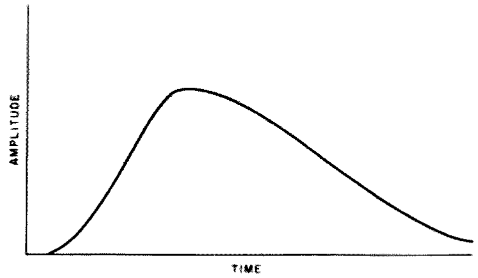

Fig. 6. Envelope of the note from a cello.

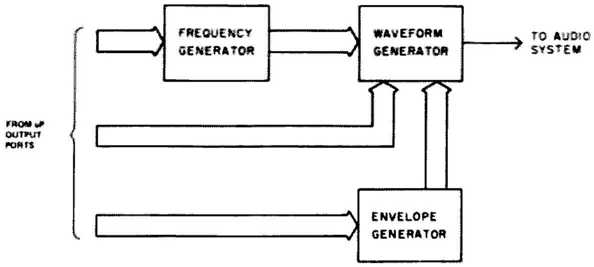

Fig. 7. Block diagram of the synthesizer.

quency and sine waves of progressively lower amplitudes at each of the odd-harmonic frequencies. This is shown in Fig. 1. The spectrum of the sound of a clarinet is similar, except that very weak components are present at the even-harmonic frequencies as well, as shown in Fig. 2. Not surprisingly, if we apply a square wave to the input of a sound system, we hear a fairly realistic clarinet-like sound. The spectra of the steady-state sounds from a trumpet and a violin are shown in Figs. 3 and 4, respectively, for comparison. Clearly, at least part of the reason why a clarinet sounds like a clarinet lies in the harmonic content of the sound which it produces. Just as clearly, we'd like to be able to manipulate the harmonic content of the sound which our synthesizer produces.

Another reason why one instrument sounds different from another involves the envelope of the note (the amplitude of the note vs. time) which each produces. If we switch a sound on abruptly and

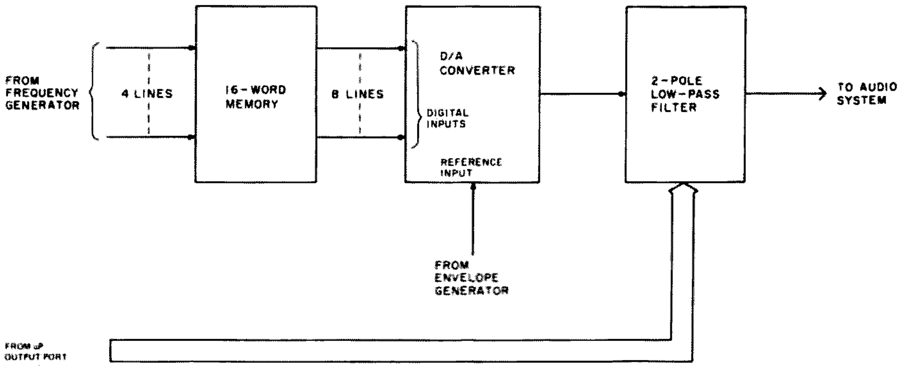

Fig. 8. Block diagram of the waveform generator.

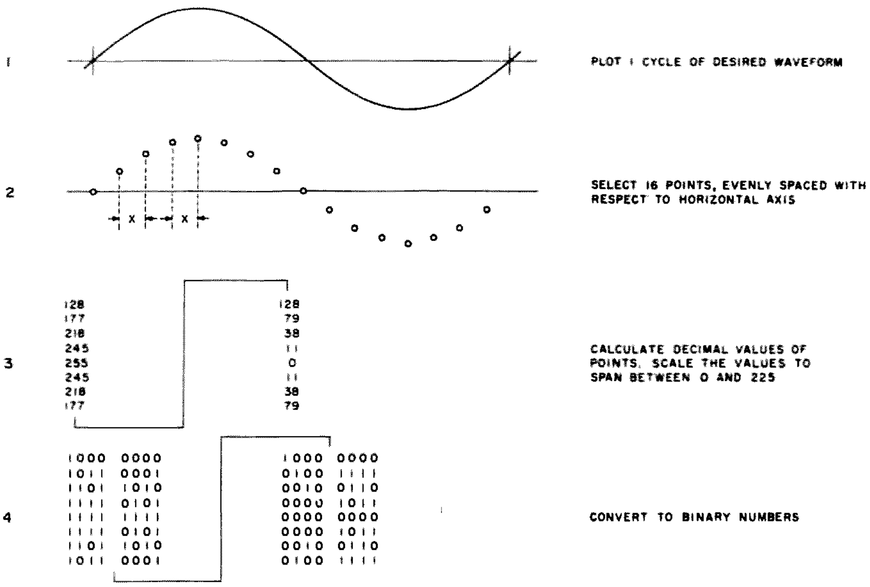

Fig. 9. Construction of a sixteen-word, eight-bit sine wave.

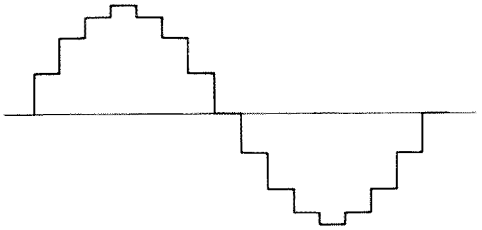

Fig. 10. Approximation of sine wave at output of D/A converter.

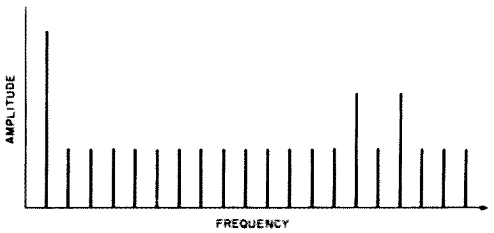

Fig. 11. Spectrum of D/A converter output.

Note	Divisor, n	$(255-n)_2$	Generator Frequency	Ideal Frequency
C	232	00010111	2093.8	2093.0
C#	219	00100100	2218.1	2217.5
D	207	00110000	2346.7	2349.3
D#	195	00111100	2491.1	2489.0
E	184	01000111	2640.0	2637.0
F	174	01010001	2791.7	2793.8
F#	164	01011011	2962.0	2960.0
G	155	01100100	3133.9	3136.0
G#	146	01101101	3327.1	3322.4
A	138	01110101	3520.0	3520.0
A#	130	01111101	3736.6	3729.3
B	123	10000100	3949.3	3951.1

Fig. 12. Parameters of the highest octave which the synthesizer will produce. Numbers listed as $(255 - n)_2$ are in the proper form to apply to the 74LS161 dividers. The most significant bit is applied to D7. Oscillator frequency is 7.772 MHz.

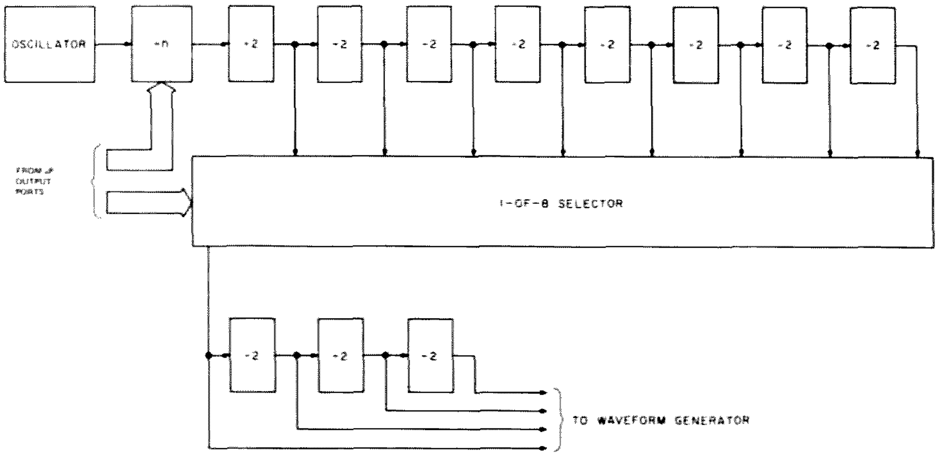

Fig. 13. Block diagram of frequency generator.

then off abruptly, the envelope is as shown in Fig. 5. The envelope of a note from a cello is shown in Fig. 6 for comparison. Clearly, we'd like to be able to manipulate the envelope of the notes which our synthesizer produces.

A Simple System

The block diagram of a synthesizer which will allow us to manipulate the frequency, harmonic content, and the envelope of a note is shown in Fig. 7. It consists of a frequency generator, an envelope generator, and a waveform generator. The frequency generator is not too unlike Winograd's device. It provides a set of driver signals which are related to the frequency of the desired note. The envelope generator provides a (relatively) slowly varying voltage which represents the desired amplitude of the note as a function of time. The waveform

generator accepts the outputs of each of the other generators and synthesizes the desired note. A uP system controls the generators by means of its output ports.

Waveform Generator

Since the waveform generator is the heart of the synthesizer, let's begin our more detailed discussion with that module. A block diagram is shown in Fig. 8.

An effective way of generating an audio waveform is to construct the digital representation of the waveform, store that representation, and convert the stored information to an audio signal. The last task is accomplished with a digital-to-analog (D/A) converter. The entire process involves calculating the binary numbers which must be successively applied to the D/A converter in order to produce one cycle of the desired waveform. That same set of numbers is then applied over and over again to the D/A converter, producing many cycles of the desired waveform. This is the basis for our waveform generator.

Construction of a sixteen-point, eight-bit digital representation of a sine wave is illustrated in Fig. 9. The procedure involves plotting one cycle of the desired waveform and selecting sixteen evenly-spaced points on the curve for digitization. Decimal values between 0 and 255 are then computed for each point (to accommodate the characteristics of our particular D/A converter). Finally, the binary equivalents of each decimal value are calculated. In order to generate the sine wave, we store the sixteen eight-bit words in a memory and apply the output of the memory to the digital inputs of the D/A converter. If we then cycle the memory sequentially so that the binary numbers are output in the proper order, something approximating a sine wave will appear at the output of the D/A converter. It will not be a perfect sine wave, because we've used only a discrete small set of numbers to represent it. Rather, the output will resemble what's shown in Fig. 10, and the spectrum of the output will be as shown in Fig. 11. There are components at most harmonic frequencies. However, except for the fifteenth and seventeenth harmonics, their amplitudes are low enough to be relatively unobjectionable. We have to deal with the two high-level harmonics, though. Otherwise, if we attempt to generate a low-frequency sine wave, we'll

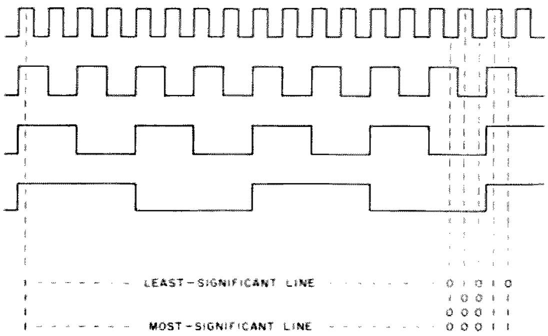

Fig. 14. Timing of square waves which drive the waveform storage memory.

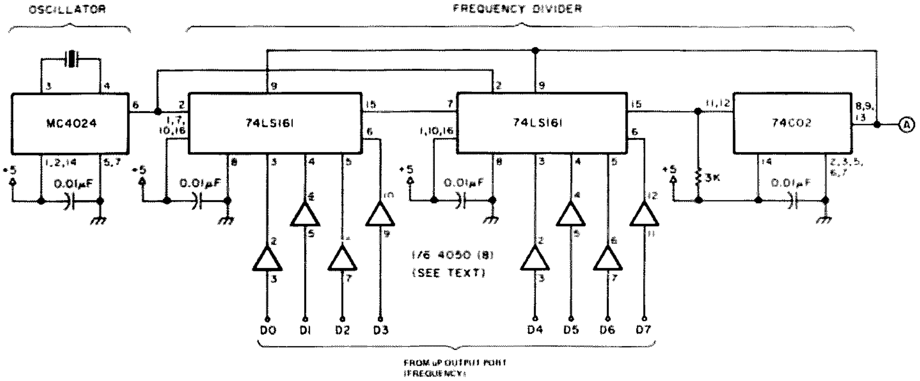

Fig. 15(a). Partial schematic of frequency generator. Note that the MC4024 is not the same as a CMOS CD4024. XTAL may be replaced with a 100-pF variable capacitor.

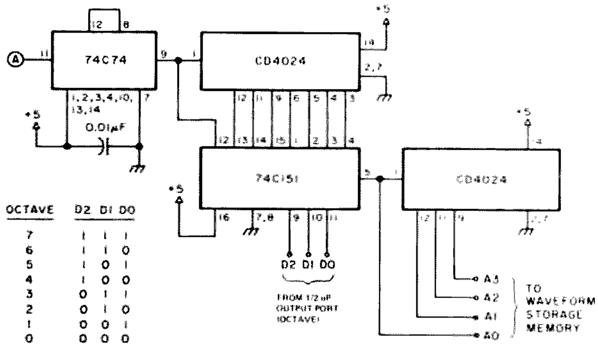

Fig. 15(b). Partial schematic of frequency generator.

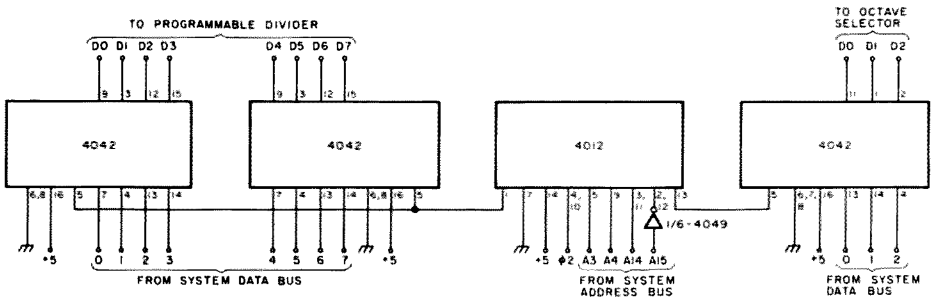

Fig. 16. Circuit to interface frequency generator to BMPS.

find a high frequency "whistle" superimposed upon it.

One way to deal with the problem is to use more points in the digital representation. This will reduce the magnitude of each harmonic, since the step changes in the waveform will be smaller in amplitude. This will also move the high-level harmonics toward the higher (perhaps inaudible) portion of the spectrum. However, if we use more points, the frequency generator must provide a higher-frequency output in order to produce a note of the same fundamental frequency. We'll settle on a sixteen-point waveform, although the synthesizer can be modified to accommodate, say, a sixty-four-point waveform.

To accomplish the task of harmonic rejection, we'll use a set of low-pass filters, any one of which can be selected by the uP. Of course, if we deliberately add harmonics when we construct the digital representation of a waveform, we don't filter them out.

The remaining input to the D/A converter is the so-called "reference" input. The output of the converter is proportional not only to the magnitude of the binary number which is applied to the digital inputs, but to the magnitude of the voltage which is applied to the reference input as well. For example, if we apply zero volts to the reference input, the output will be zero volts, regardless of the value of the number which is applied to the digital inputs. In short, we have a means to control the envelope of a note.

The Envelope Generator

The envelope generator closely resembles the waveform generator, except in two respects. First, a constant voltage is

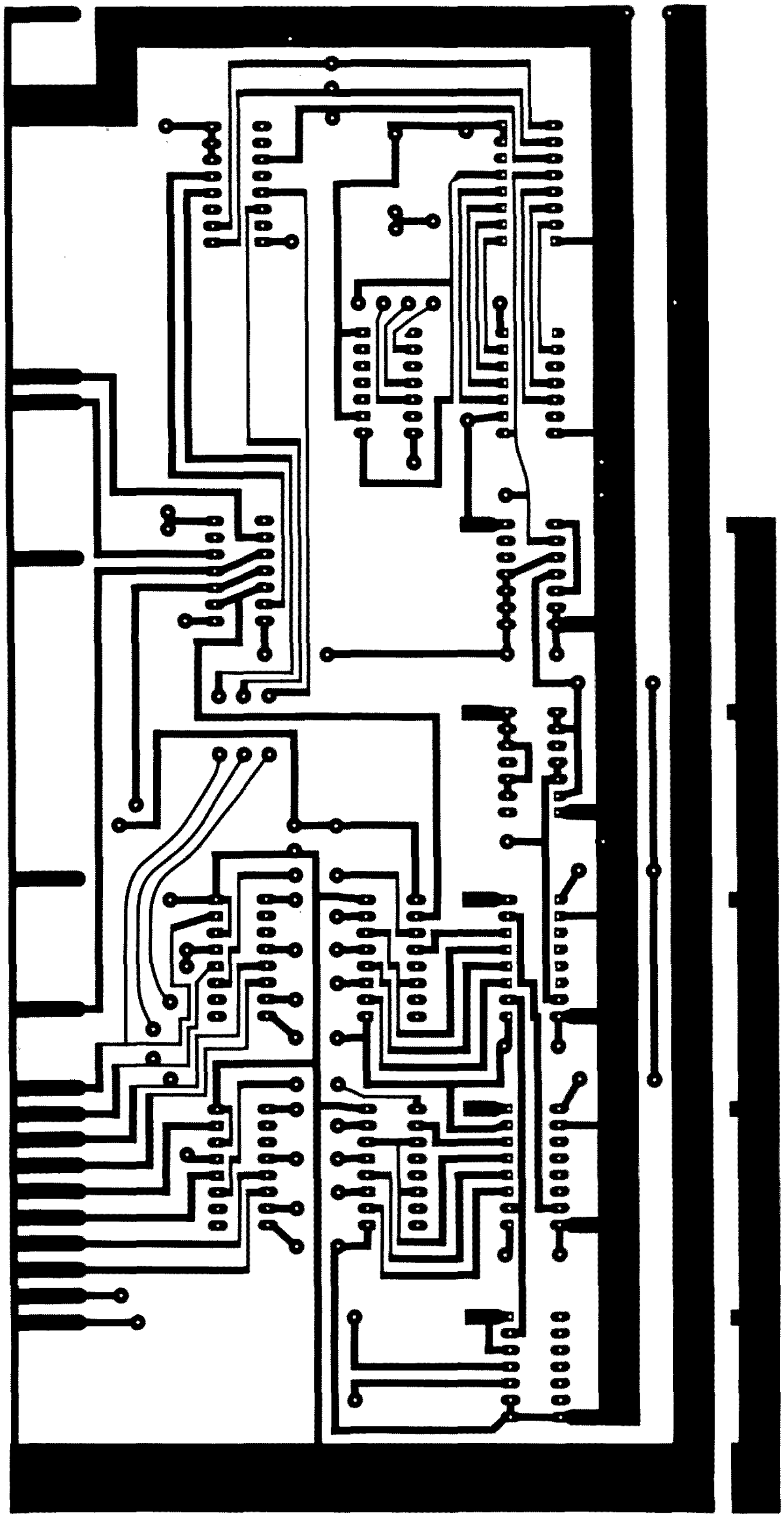

Fig. 17. Foil side of PC board, frequency generator.

applied to the reference input. Second, the binary numbers which represent the desired envelope are stored in the memory of the uP rather than in a dedicated memory. This is permissible because the timing requirements for the envelope *generator are* considerably less restrictive than those for the waveform generator.

Frequency Generator

The remaining module in the synthesizer is the frequency generator. Its purpose is to drive the waveform storage memory. Before we examine how it functions, however, we should discuss the properties of the conventional *musical* scale.

The scale is divided into octaves. A note which is one octave above another has a fundamental frequency which is twice that of the other. Each octave contains twelve notes which are equally spaced in frequency. Given these two facts, it follows that the frequency of each note is the twelfth root of two times the frequency of its lower neighbor.

A common method of generating the required set of frequencies from a single reference is to drive a programmable divider with a high-frequency oscillator. If the frequency of the oscillator is high enough and the divisors are large enough, then the resulting notes will sound on key. Within the limits of an eight-bit system (divisor = 1 to 255), the results are quite acceptable, but not perfect. A nine-bit system would satisfy even someone with perfect pitch.

The fundamental frequencies of the notes in the highest octave which our synthesizer will produce are shown in Fig. 12, along with the appropriate divisors and the theoretically perfect set of frequencies

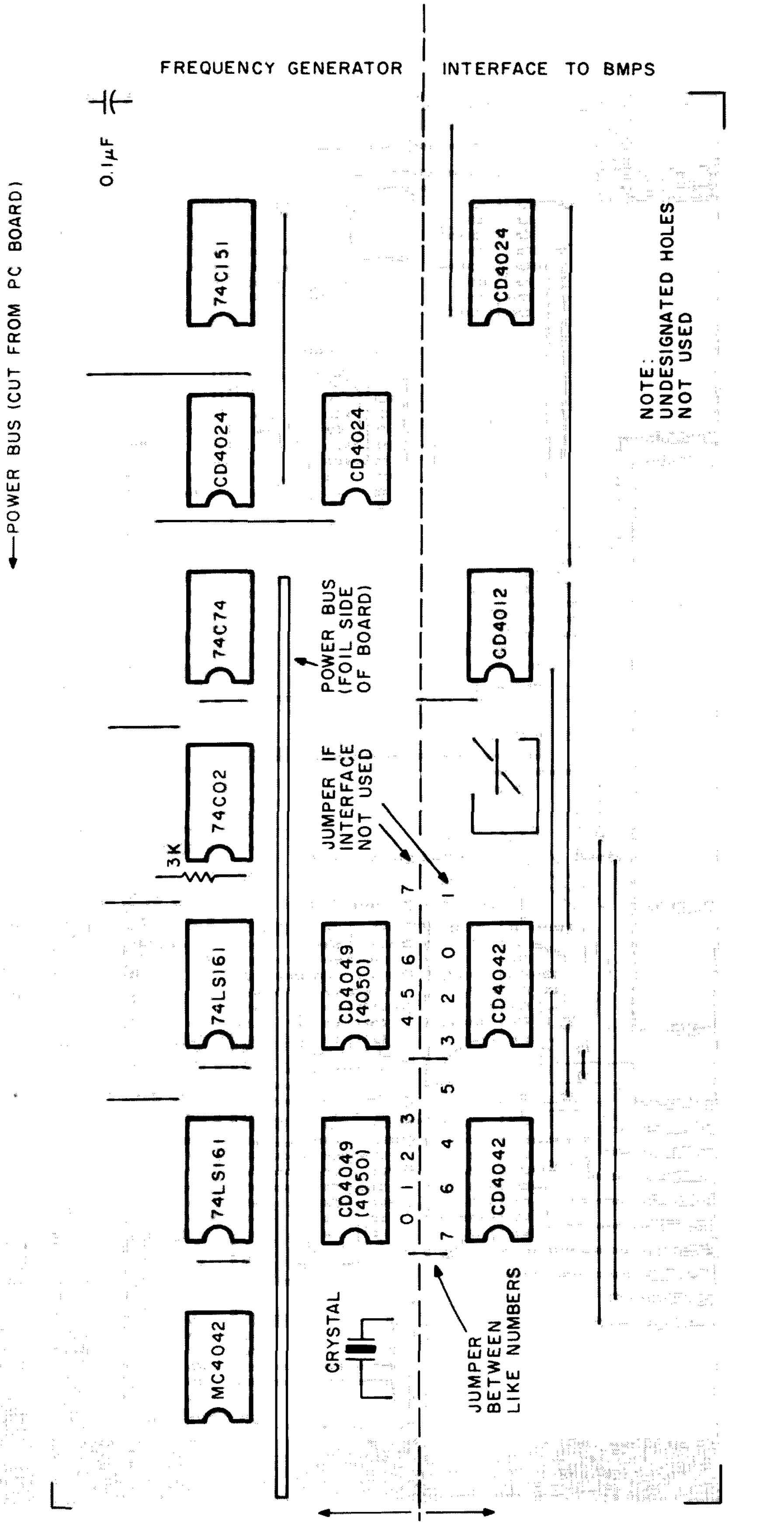

Fig. 18. Component side of PC board, frequency generator. Note: Bypass +5-volt terminals of MC4024 and 74LS161 ICs to ground using 0.1 uF disc ceramic capacitors (foil side of board).

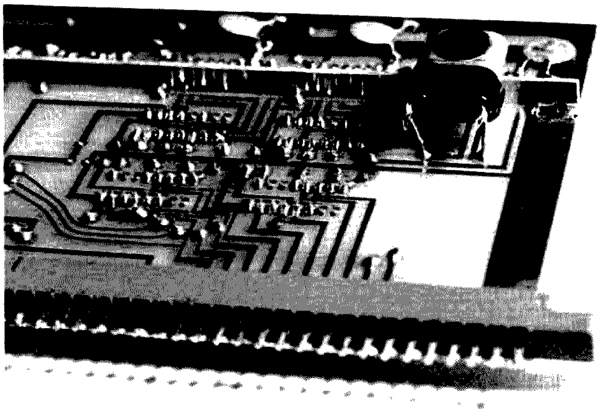

Fig. 19. Foil side of frequency-generator board, showing crystal and power bus.

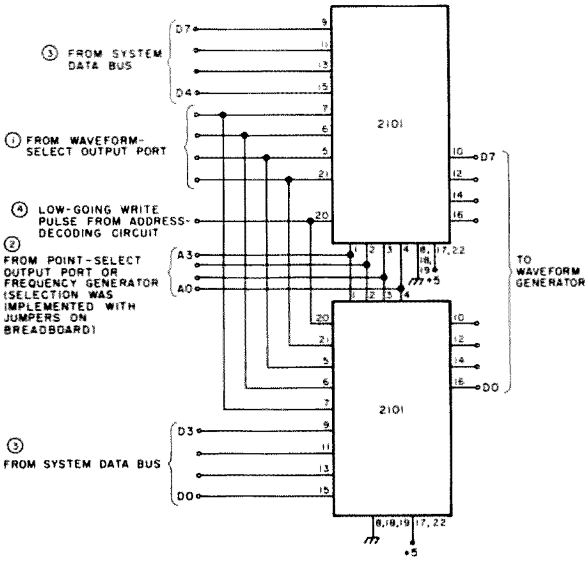

Fig. 20. Breadboard circuit of waveform memory using RAM.

for comparison. The values of n are based on a reference frequency of 7.77216 MHz. Of course, if we divide 7.772 by 123, for example, the result is not 3949.3 kHz. Rather, it's 63.188 kHz, which is sixteen times 3949.3 kHz. The factor of sixteen arises because we use sixteen points in a digital array to represent one cycle of a waveform.

A block diagram of the frequency generator is shown in Fig. 13. It consists in part of an oscillator and programmable divider as mentioned above. Since the output of the programmable divider is a pulse train (which is unacceptable for driving the waveform storage memory), it's applied to a binary divider. The output of the binary divider is a square wave with a duty cycle of fifty percent, as required.

This first binary divider drives a chain of seven additional binary dividers. The output of one or another of the eight binary dividers is passed by the one-of-eight selector, depending on the octave of the desired note.

Four square waves are necessary in order to drive a sixteen-word waveform storage memory. The output of the selector is the first. The remaining three are derived from the first by a chain of three additional binary dividers. The timing of the square waves is illustrated in Fig. 14. The sequence is as required in order to cycle the waveform storage memory in the proper manner. The fundamental frequency of the lowest-frequency square wave of the four is then the fundamental frequency of the waveform the synthesizer will produce.

Construction

Before discussing construction, let's note that the synthesizer can be used with almost any uP system. All that's required is a source of power and three output ports to transfer information to the synthesizer. The schematics and PC-board layouts reflect this. However, the synthesizer was developed in connection with my own particular uP system, what I call A Beginner's Microprocessor System (BMPS, a 6502-based computer).[2] For those who will use the synthesizer with a similar system, the schematics and PC-board layouts contain additional details. Those who will use a different uP system or those who expand their BMPS to include three output ports should ignore the additional

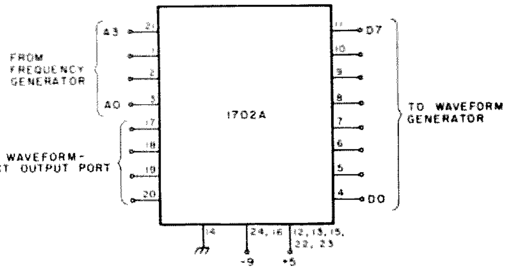

Fig. 21. Breadboard circuit of waveform memory using ROM.

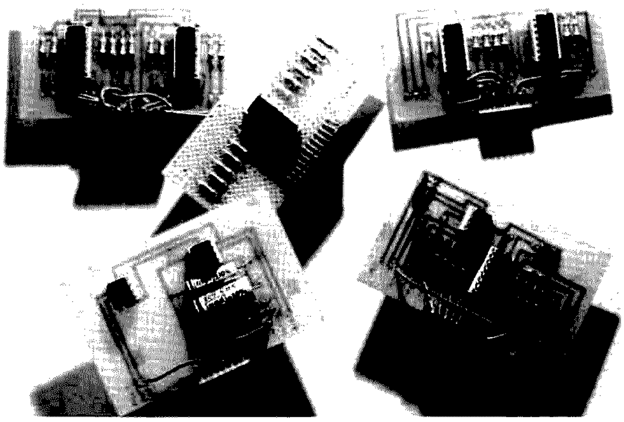

Fig. 22. Photo of modules.

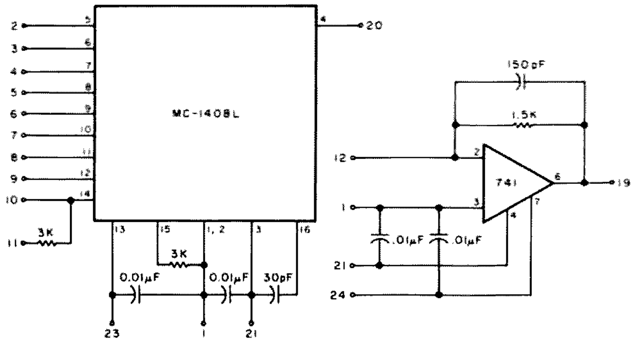

Fig. 23. Schematic of D/A converter module. Note: Tie pins 5-12 of MC1408L to ground via eight 47k resistors.

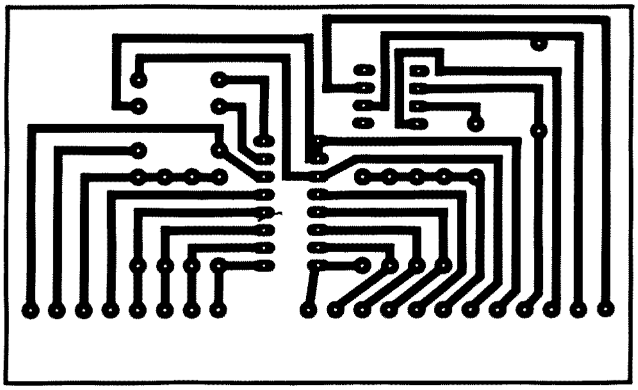

Fig. 24. Foil side of PC board, D/A converter.

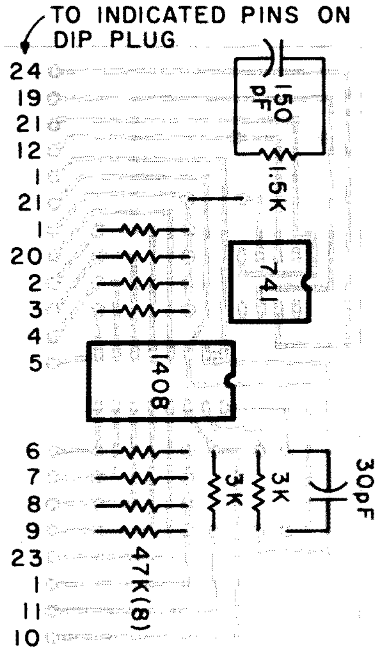

Fig. 25. Component side of PC board, D/A converter. Notes: (1). Foil pattern does not correspond exactly to the photograph. (2). Bypass +5, +12, and −12 V power leads to ground at IC sockets.

details. Each instance will be noted, as encountered.

A schematic of the frequency generator is shown in Figs. 15(a) and 15(b). The oscillator is an MC4024, with a 7.772 MHz crystal as the frequency-determining element. A 100-pF variable capacitor may be substituted for the crystal in the interest of economy. Since CMOS ICs don't function reliably above about 3 MHz when 5-volt power is used, low-power-Schottky 74LS161 programmable dividers are used. Onboard CMOS ICs are used to drive the frequency-select inputs of the dividers in order to avoid running long leads from off the board to those inputs. In fact, the remaining digital ICs in the entire synthesizer are CMOS, because of their forgiving nature concerning long leads.

A 74C02 NOR gate feeds back "load" pulses to the programmable dividers. Since the repetition rate of that series of pulses is the frequency of interest, the pulse train is applied to a 74C74 type D flip-flop which is configured as a binary divider. The 74C74 produces a square wave which is applied to a CD4024 seven-stage binary divider. This device simultaneously produces an output in each octave that the synthesizer covers. One of these outputs is passed on by the 74C151 selector. Which one depends on the 3-bit binary word that is applied to the address inputs of the 74C151. Since the 74C151 is a CMOS device, its address inputs need not be buffered. Finally, a second CD4024 is used to produce the set of four square waves which drives the waveform storage memory.

To interface the frequen-

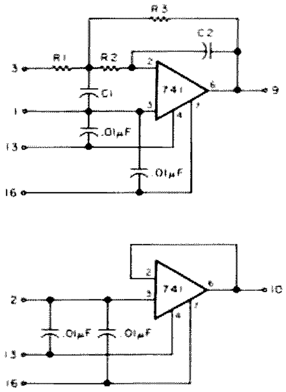

Fig. 26. Schematic of filter module.

Cutoff Frequency, Hz*	R1, Ω	R2, Ω	R3, Ω	C1, μF	C2, μF
100	11254	5627	11254	0.4	0.1
200	5627	2813	5627	0.4	0.1
400	2813	1407	2813	0.4	0.1
600	3751	1876	3751	0.2	0.05
800	2813	1407	2813	0.2	0.05
1000	2251	1125	2251	0.2	0.05
1200	1876	938	1876	0.2	0.05
1500	7503	3751	7503	0.04	0.01
2000	5627	2813	5627	0.04	0.01
5000	2250	1125	2250	0.04	0.01

*Rolloff is 12 dB/octave. Response at "cutoff" frequency is down 3 dB. Low-frequency gain is unity.

Fig. 27. Component values for filters.

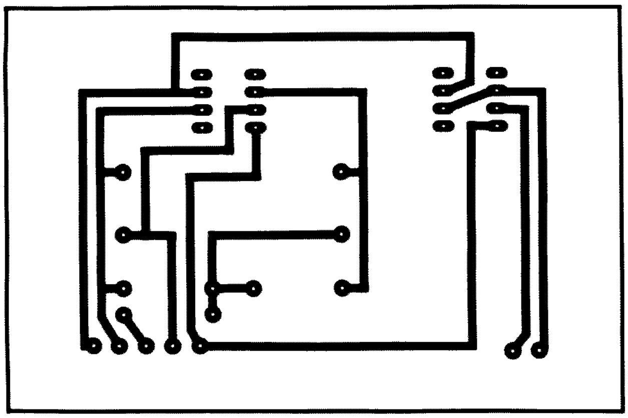

Fig. 28. Foil side of PC board, filter.

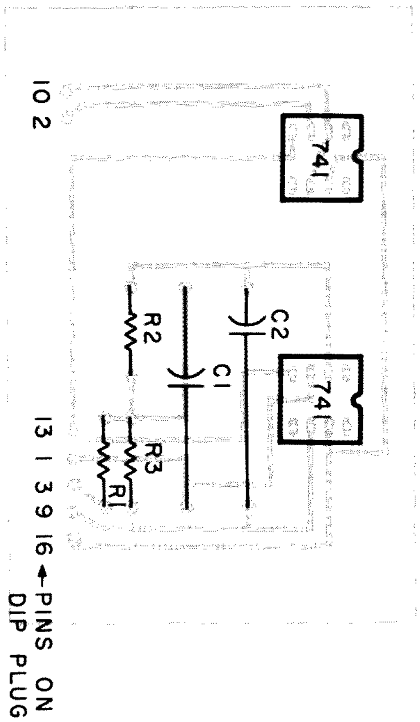

Fig. 29. Component side of PC board, filter. Notes: (1). Foil pattern does not correspond exactly to photograph. (2). Bypass +12 and −12 volt power leads to ground at IC sockets.

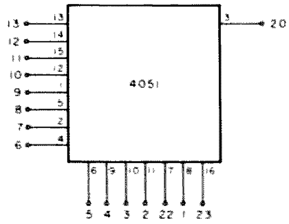

Fig. 30. Schematic of analog selector module. Note: Tie all terminals of 4051, except 1, 3, 22, and 23, to ground via individual 47k resistors.

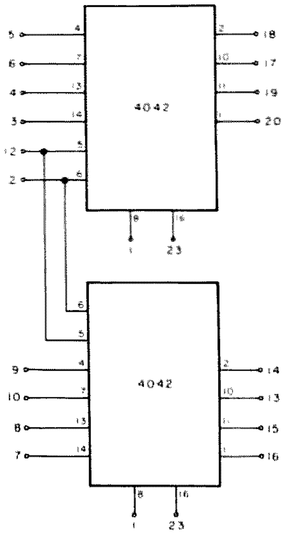

Fig. 31. Schematic of latch module. Note: Tie pins 4, 7, 13, and 14 of each 4042 to ground via individual 47k resistors.

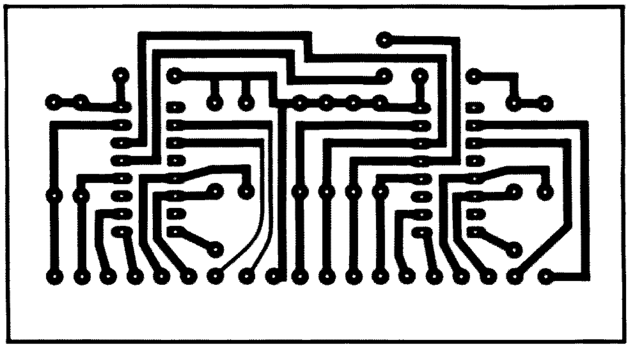

Fig. 32. Foil side of PC board, latch.

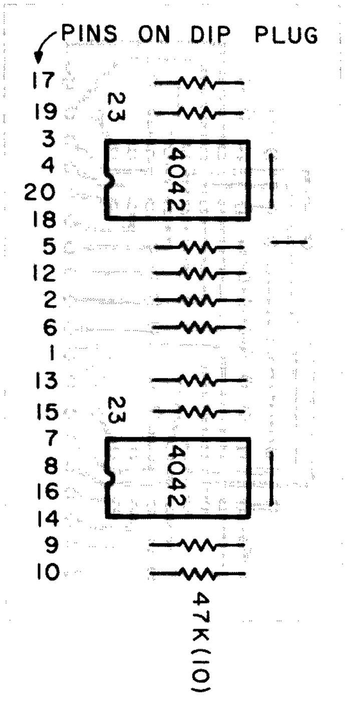

Fig. 33. Component side of PC board, latch. Note: Pin 1 of 4042s is at bottom of layout.

cy generator requires the additional circuitry shown in Fig. 16. A pair of CD4042 latches provides the 8-bit output port which drives the frequency-select circuit. A single CD4042 provides the 3-bit output port which drives the octave-select circuit. Strobe signals for the latches are produced by a CD4012 dual 4-input NAND gate. Address line A15 (inverted), address line A14, and the ϕ_2 clock signal are each applied to both gates. In addition, address line A3 is applied to the gate which strobes the frequency-select latches, and address line A4 is applied to the gate which strobes the octave-select latch. This means that the address of the former is 4008 and the address of the latter is 4010.

The PC-board layout for the frequency generator is

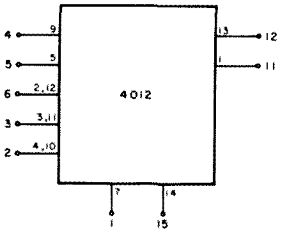

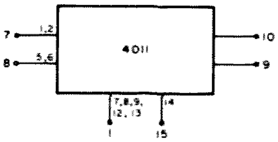

Fig. 34. Schematic of pulser module. Note: Tie inputs 2, 3, 4, 5, 9, 10, 11, and 12 of 4012 to +5 volts, and 1, 2, 5, and 6 of 4011 to ground via 47k resistors. It is okay to pair, as shown.

shown in Figs. 17 and 18. It includes both the generator and the interface to the BMPS. Those who have this system should use the entire layout with CD4049 inverters as the buffers. (An inverter is needed in the address-decode logic, Fig. 16.) Since the $\overline{Q}$ outputs of the 4042 latches are used, the data is inverted twice, which means that whatever number the uP applies to the latch will be applied to the 74LS161 dividers.

Those who use the synthesizer with some other uP system should construct only the portion of the layout above the dotted line shown in Fig. 18, and should use CD4050s as the buffers, as shown in Fig. 15(a). Note the jumper connection (Fig. 18) which must be made in this case to protect the input of the unused section of one CD4050.

In either case, the crystal socket or capacitor is mounted on the foil side of the board and a bus strip is used to provide power to several of the ICs, as shown in Fig. 19.

In my system, I use a sixteen-word diode-implemented programmable memory as the waveform

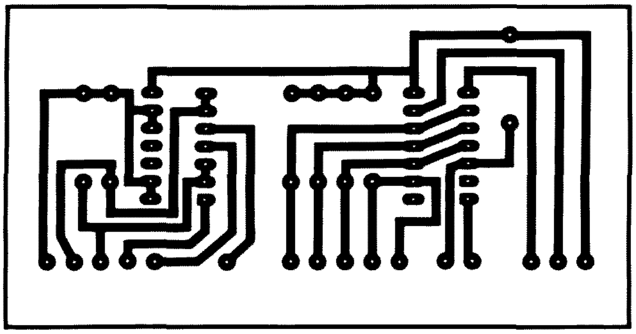

Fig. 35. Foil side of PC board, pulser.

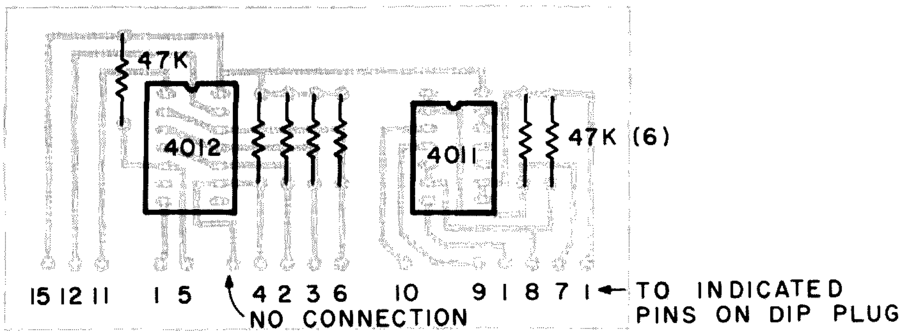

Fig. 36. Component side of PC board, pulser.

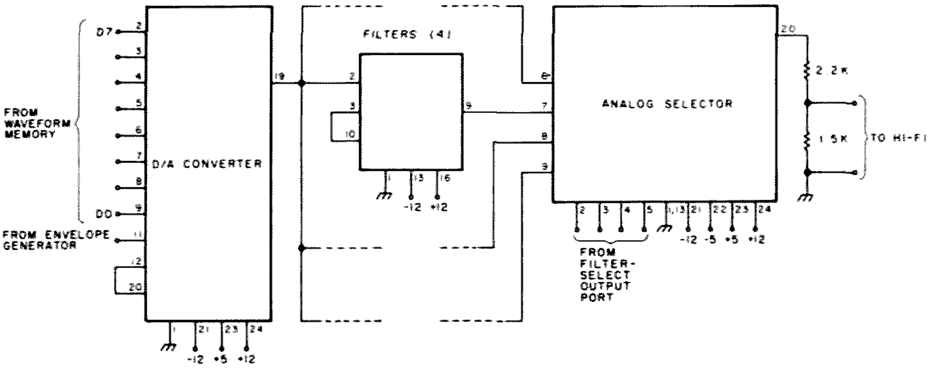

Fig. 37. Schematic of waveform generator.

storage memory. It was left over from previous experiments and provided a quick and easy way to get started. While details concerning such a memory are contained in reference 2, a "from-scratch" implementation probably should be based on a conventional RAM, ROM, or shift register. The circuits shown in

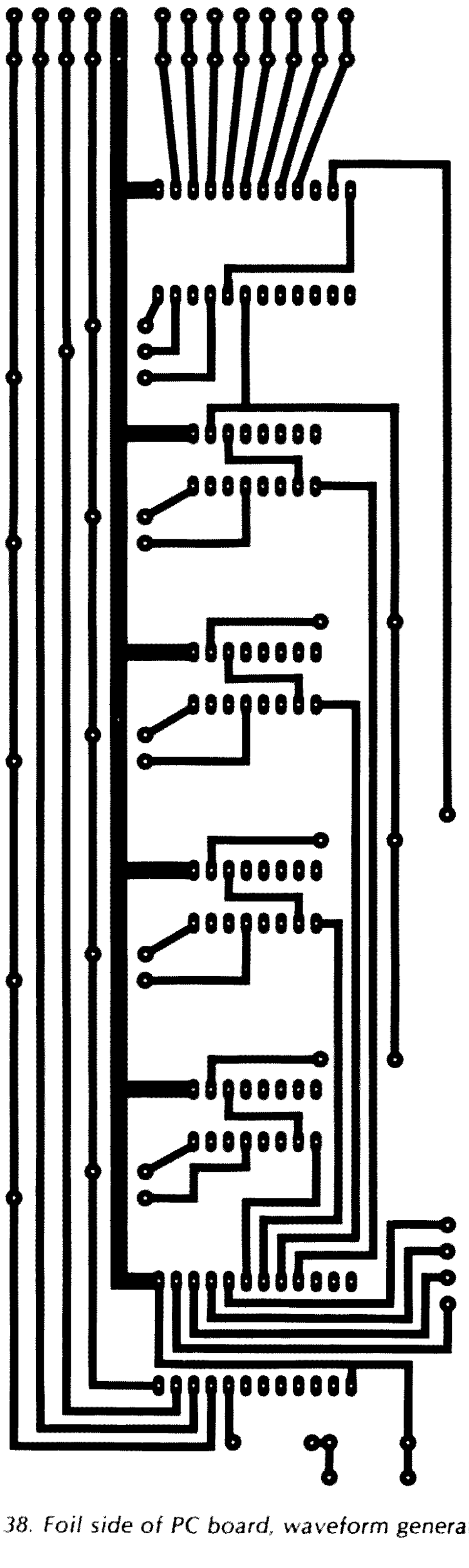

Fig. 38. Foil side of PC board, waveform generator.

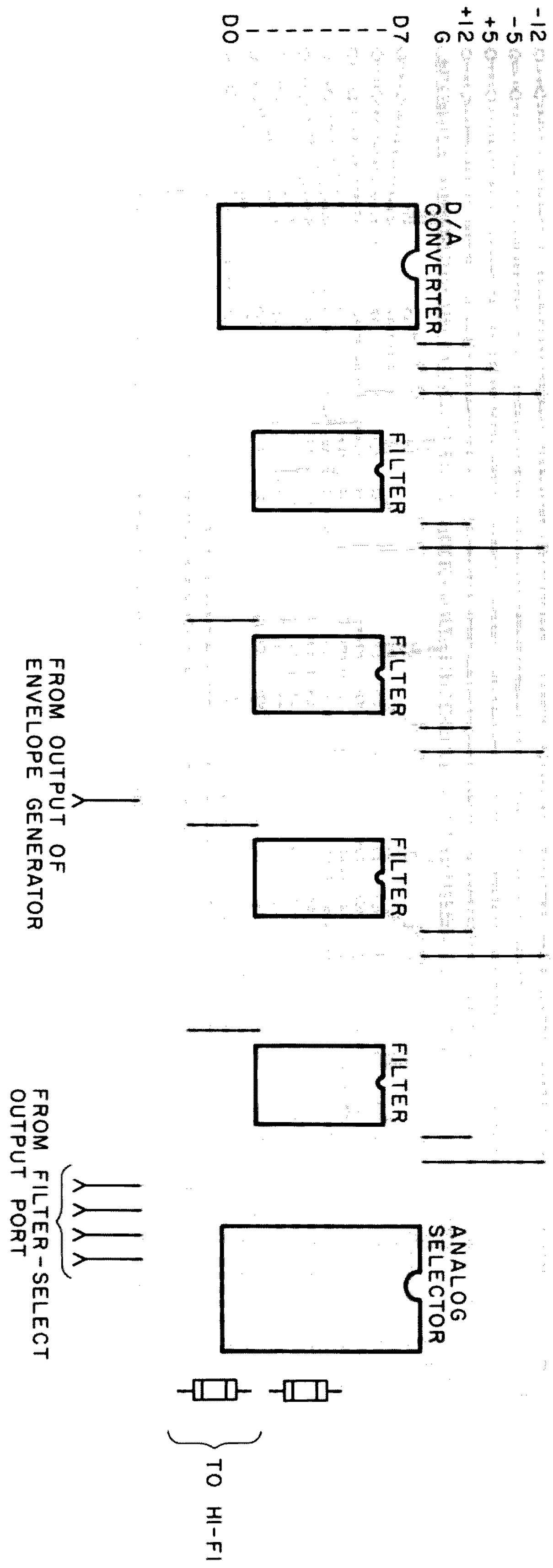

Fig. 39. Component side of PC board, waveform generator.

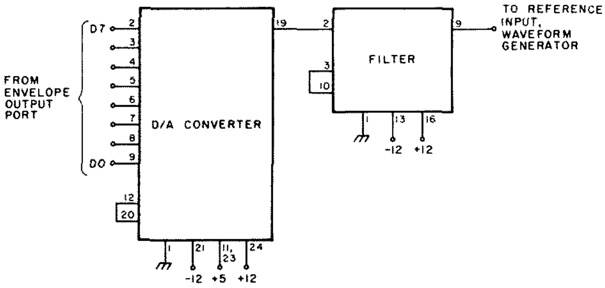

Fig. 40. Schematic of envelope generator.

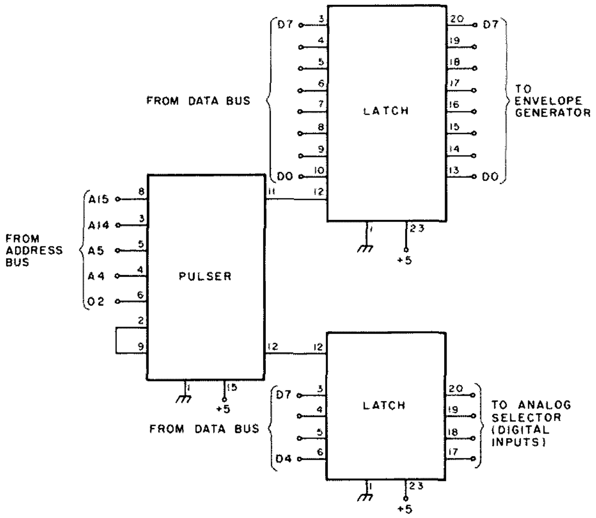

Fig. 41. Circuit to interface generators to BMPS.

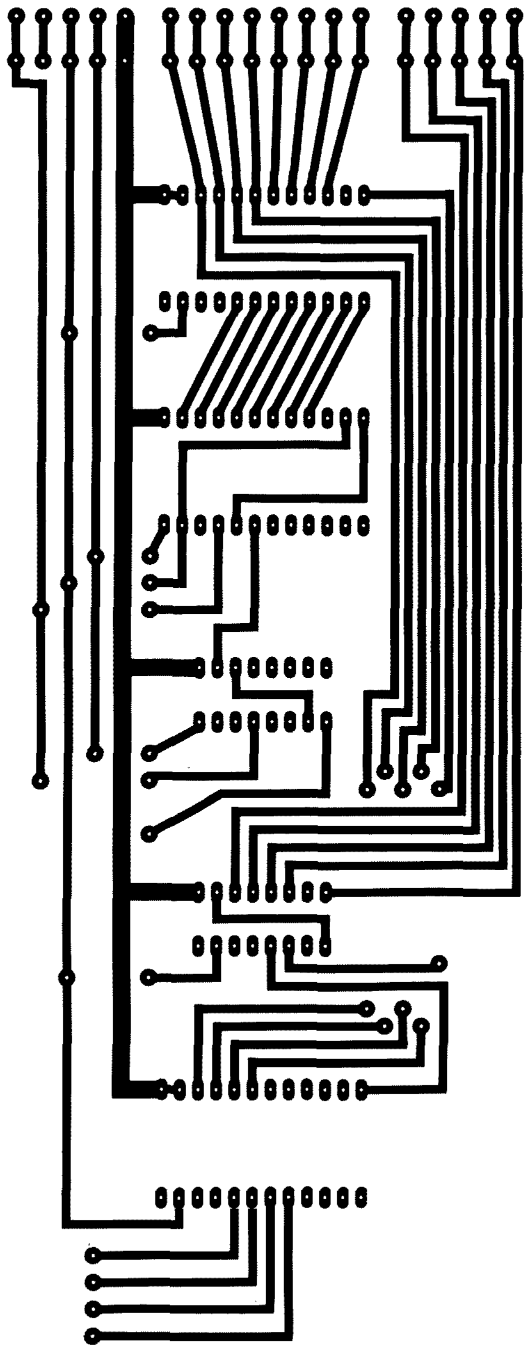

Fig. 42. Foil side of PC board, envelope generator.

Figs. 20 and 21 are based on successful breadboard experiments, but no PC boards were ever worked up.

The RAM version is programmed by applying a 4-bit address at point 1 in Fig. 20. This selects a block of 16 words within the memories. The number 000_{16} is then applied at point 2. The 8-bit word to be written into that location is applied at point 3. Then, a low-going write pulse is applied at point 4. The steps are repeated (the number applied at 2 is incremented each time) until the 16-word block is programmed. The RAM version then is used by tying point 4 to +5 volts, and connecting the frequency generator at 2.

The remainder of the synthesizer is modular in construction. However, this need not be the case for the person who plans no further experimentation in synthesizer design. The circuits of the individual modules can be grouped on a single PC board which can also contain the frequency generator.

The person who uses other than an unexpanded BMPS to drive the synthesizer will require the following modules: 2 D/A converters, 2-5 filters, and 1 analog selector. The person who does use an unexpanded BMPS will require the following additional modules: 2 latches and 1 pulser.

Each module is constructed in a small board which is epoxied to a DIP plug. In this way, fairly complex functions are available in plug-in form. As a result, the master board which holds several modules is very simple to construct or modify. The modules themselves need no modification even if the system is radically altered. The five types of modules are shown in Fig. 22.

The schematic of the D/A converter module is shown in Fig. 23. The converter is an MC1408L 8-bit device. Each binary input (pins 5-12) should be pulled down to ground via a 47k resistor (not shown in diagram). This doesn't affect normal operations, but it protects the inputs of the 1408 when the module is not plugged in to the master board. The positive reference input, pin 14, is accessible both directly and via a 3k resistor. In the former case, a reference current is applied directly

to pin 14. Applying a voltage via the 3k resistor accomplishes the same result. The output of the 1408, a 0 to −2 mA current, is directly available. Other passive components which are connected to the 1408 ensure stable and proper operation. A 741 op amp configured as a current-to-voltage converter is included on the board. If a 1.5k feedback resistor is used, −2 mA from the 1408 produces an output of 3 volts. The PC-board layout for the D/A converter is shown in Figs. 24 and 25.

The schematic of the filter module is shown in Fig. 26. A 741 op amp is configured as a two-pole low-pass filter. The values of R1, R2, R3, C1, and C2 depend on the desired cutoff frequency. A tabulation is shown in Fig. 27. A 741 op amp configured as a voltage follower is included on the filter board. If many filters are connected to a single source, that source may be unduly loaded. Inserting a voltage follower between the source and the filter eliminates the loading. The PC-board layout for the filter is shown in Figs. 28 and 29.

The schematic of the analog selector module is shown in Fig. 30. The heart of the device is a CD4051 8-input analog multiplexer. Depending on the 3-bit word which is applied to the address inputs of the 4051, one or another of the eight analog inputs is passed on to the output (provided the inhibit input is held low). Pull-down resistors are used to protect the inputs of the CD4051. No PC-board layout is provided. Because of the small number of components, perfboard and point-to-point wiring are good choices.

The person who uses other than a basic BMPS should ignore the following material on the latch and pulser modules, since they are not required in that case.

The schematic of the latch is shown in Fig. 31. A pair of CD4042 latches is used, and pull-down resistors are provided to protect the inputs of the CD4042. The clock inputs of both 4042s are tied together and made available, as are the polarity inputs of both latches. The PC-board layout for the latch module is shown in Figs. 32 and 33.

The schematic of the final module, the pulser, is shown in Fig. 34. This device decodes address and timing information to

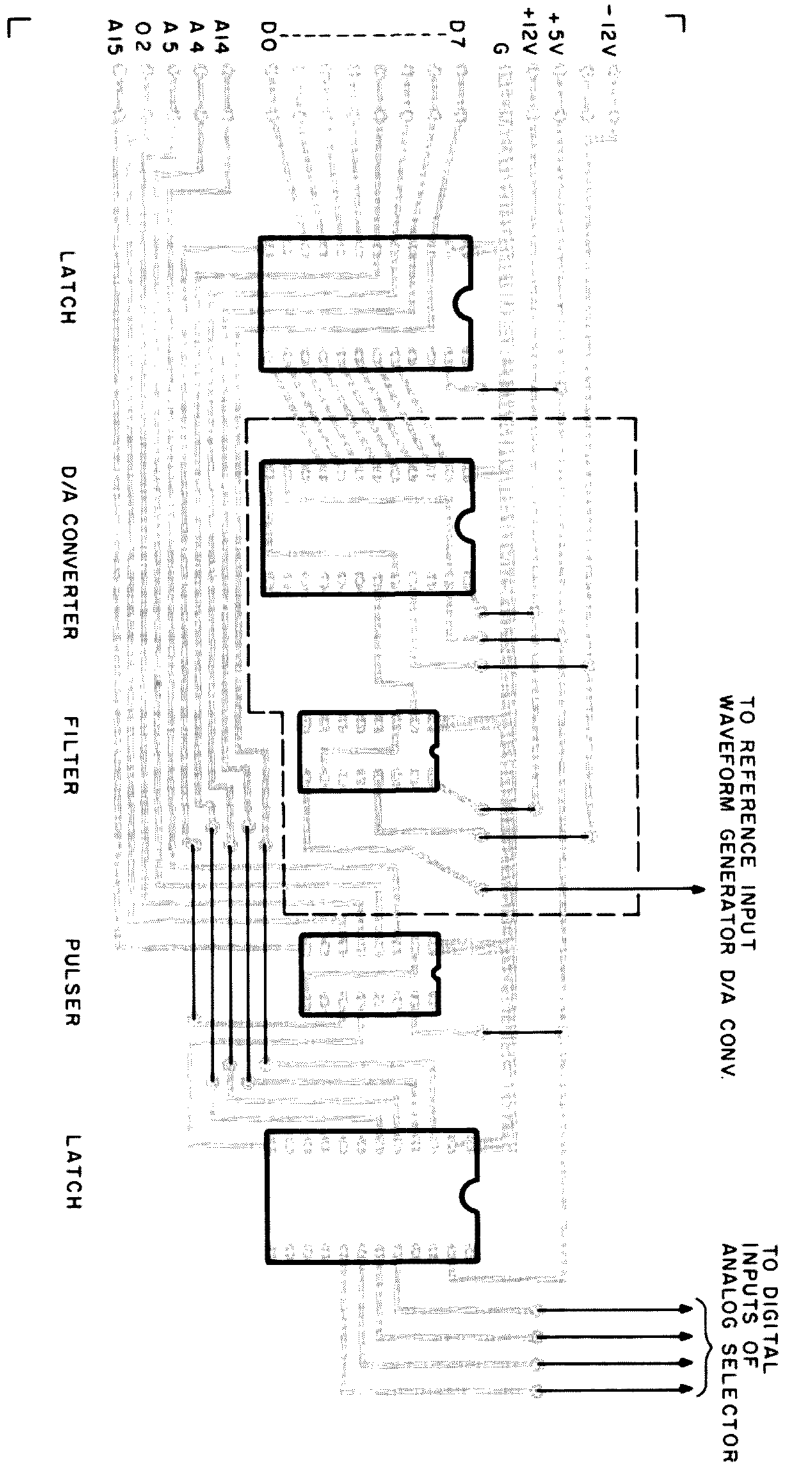

Fig. 43. Component side of PC board, envelope generator. Note: Dotted line encloses necessary functions, if BMPS is not used.

provide triggering pulses to latches. A pulser module and latch module together form an output port. Two sections of a CD4011 quad 2-input NAND gate are connected as inverters and are available in the uncommitted form. The inputs are protected by pull-down resistors. Pull-up resistors are provided for the inputs of the CD4012 dual 4-input NAND gate. Since the inputs of a NAND gate are active high, any unused inputs of the 4012 simply may be left unconnected (at the module level). PC-board layouts are shown in Figs. 35 and 36.

Interconnecting the various modules is straightforward. A schematic of the waveform generator is shown in Fig. 37.

The waveform generator (exclusive of the waveform storage memory) consists of a D/A converter, four filters, and an analog selector. The digital inputs of the D/A converter are driven directly by the waveform memory. The reference input of the D/A converter is driven by the envelope generator. The output of the D/A converter is applied to all the filters. The output of one filter is then passed on to a hi-fi system by the analog selector, depending on the four-bit word which is applied to the address and inhibit inputs of the selector. If the line to the hi-fi is more than about six feet long, add a voltage follower at the output of the resistive network.

The PC-board layout for the waveform generator is shown in Figs. 38 and 39. From left to right (component side), the filters are selected by applying 0100, 0101, 0110, or 0111 to the analog selector. Applying 0000 will ground the top of the resistive-divider network. This is handy for avoiding floating leads to hi-fi system inputs.

A schematic of the envelope generator is shown in Fig. 40. It consists of a D/A converter and a filter. These provide the reference voltage for the waveform generator. For the person who doesn't use the basic BMPS, no additional functions within the

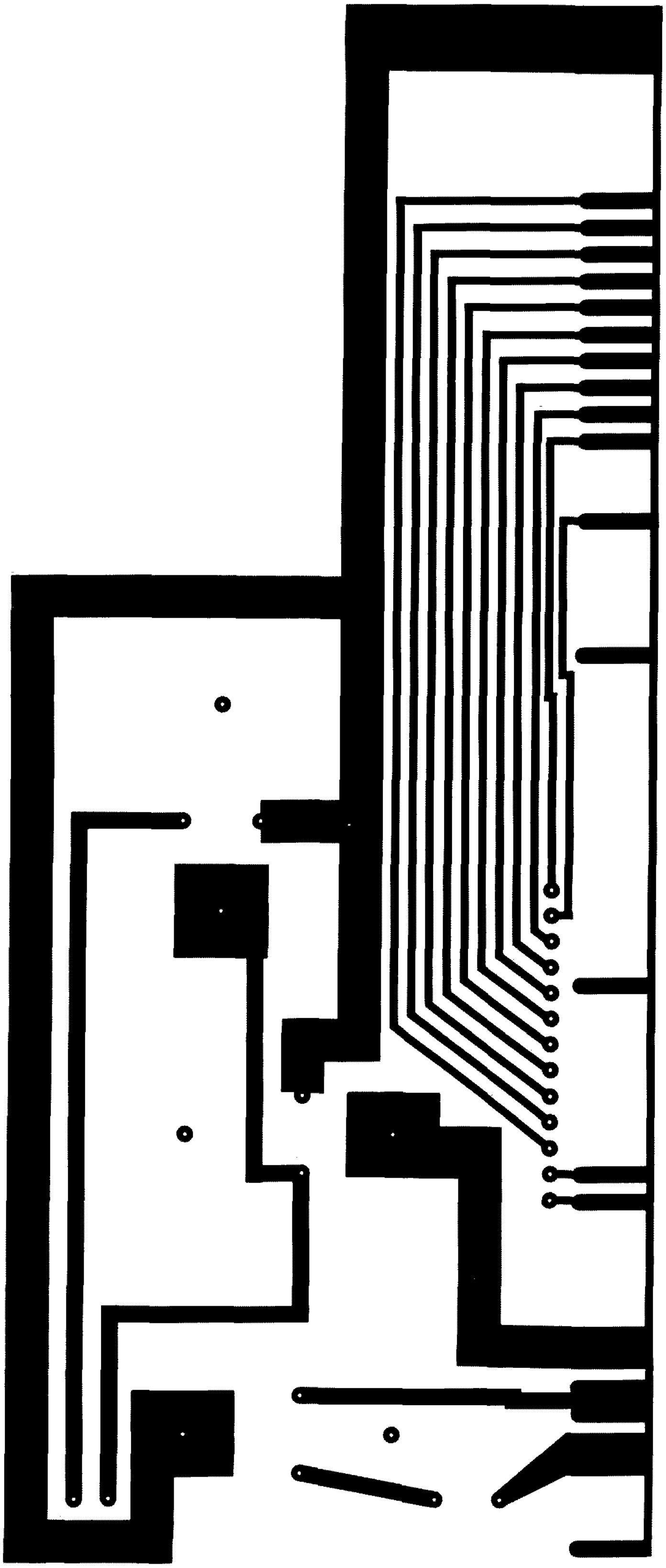

Fig. 44. Foil side of PC board, power supply.

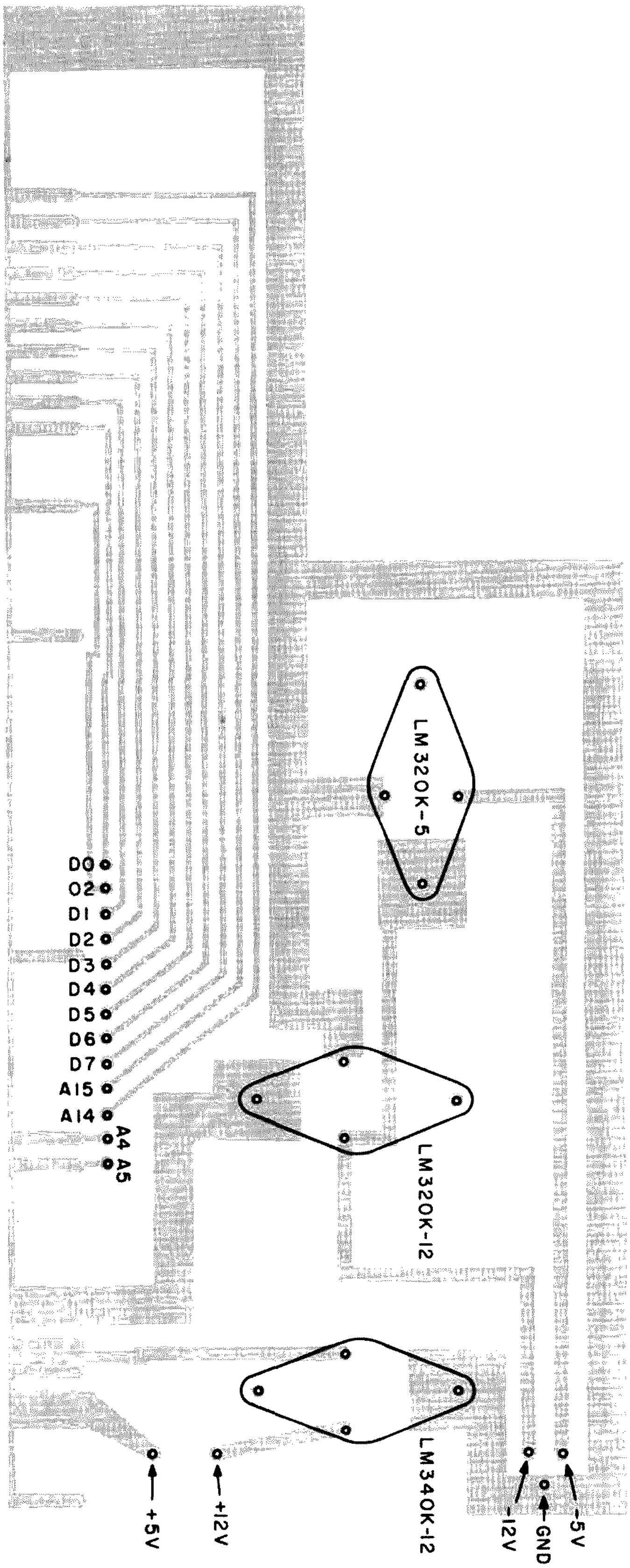

Fig. 45. Component side of PC board, power supply. Notes: (1). Use heat sink with voltage regulators. (2). Bypass input and output of each voltage regulator to ground via a 0.1 uF disc ceramic capacitor and a 10 uF tantalum capacitor.

envelope generator are required. For the person who does, the functions which are shown in Fig. 41 are required. These consist of two latches and a pulser. Together they form an 8-bit output port and a 4-bit output port. Since the 4-bit output port is used to drive the binary inputs of the analog selector, and thus selects the filter in the signal path, its address is assigned as 4010. This is the same address which is used to select the octave (frequency generator board). The reasoning involved is that if the octave is changed, a different filter may well be desirable.

The 8-bit output port is used to drive the D/A converter in the envelope generator. Its address is 4020.

The PC-board layout for the envelope generator is shown in Figs. 42 and 43. The dotted line encloses the D/A converter and filter.

Finally, several voltages are needed to power the modules. For the person who uses the BMPS, the PC-board layout shown in Figs. 44 and 45 will be useful. In addition to providing +12, +5, −5, and −12 volt power, as is required in any case, it also provides access to the system data bus, address bus, and $\emptyset_2$ line.

My version of the synthesizer, exclusive of the frequency generator and power-supply board, is shown in Fig. 46. At the left is the 16-word diode-implemented memory. To its right are the waveform generator and envelope generator, both without filters. I etched the latter two on a single PC board.

Software

The software which is used in the implementation is straightforward. A flowchart is shown in Fig. 47. The first step, "select frequency," involves ap-

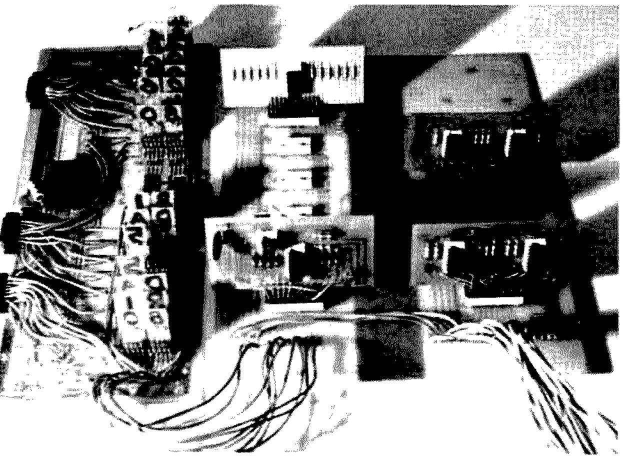

Fig. 46. Photo of author's version of synthesizer (excluding the frequency generator and power supply board). At the left is the 16-word diode-implemented memory. At the right are the waveform generator and envelope generator, with filters removed.

plying a number to the "N" inputs of the binary divider. The number simply is one of the twelve shown in Fig. 12 and corresponds to the frequency (exclusive of octave) of the desired note. This implies that we previously have stored in memory a series of numbers, one corresponding to the frequency of each note of the desired melody. The second step, "select octave and filter," is similar, except that the series of numbers corresponds to the octaves of the notes of the desired melody and the filter to be used for each.

Once we select the frequency, octave, and filter for the note, we successively apply each point of the envelope to the envelope generator. The number of points in the envelope and the delay between applications determine the duration of the note.

After each note has been played, we check to see if all notes have been played. Once that happens, we apply 0000 to the analog selector. The details of what should happen next depend on the particular uP system. Something similar to a HALT should be executed.

A minimal 6502 program which will run properly on the BMPS is shown in Fig. 48. It assumes that fourteen notes are to be played and that a thirty-two-point envelope is to be used. The data sets which define the melody that the program plays were developed by the method shown in the next section.

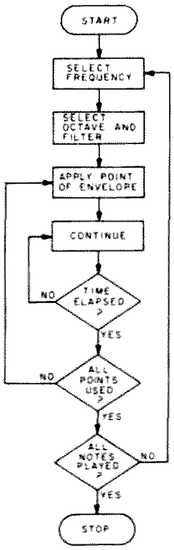

Fig. 47. Flowchart of software.

Translating Sheet Music Into Data Sets

Constructing data sets is not difficult. What's in-

✓ Reader Service—see page 323.

LOCATION	CONTENTS	INSTRUCTION	
80	A2		LDX * OD
1	OD		
2	AO	LOOP2	LDY * 20
3	20		
4	BD		LDA FREQ,X
5	BO		
6	FF		
7	8D		STA FQ
8	08		
9	40		
A	BD		LDA OCTFIL,X
B	CO		
C	FF		
D	8D		STA OCFL
E	10		
F	40		
90	B9	LOOP1	LDA ENV,Y
1	DO		
2	FF		
3	8D		STA EN
4	20		
5	40		
6	8D		STA OPORT
7	00		
8	82		
9	AD	WAIT	LDA IPORT
A	00		
B	90		
C	30		BMI WAIT
D	FB		
E	88		DEY
F	DO		BNE LOOP1
AO	EF		
1	CA		DEX
2	DO		BNE LOOP2
3	DE		
4	4C	FIN	JMP FIN
5	A4		
6	FF		
.			
.			
.			
BO	17	FREQ	
1	47		
2	64		
3	64		
4	75		
5	51		
6	47		
7	17		
8	30		
9	47		
A	47		
B	30		
C	17		

D	30	
E	--	
F	--	
CO	56	OCTFIL
1	56	
2	56	
3	56	
4	56	
5	56	
6	56	
7	56	
8	56	
9	56	
A	56	
B	56	
C	56	
D	56	
E	--	
F	--	
DO	FF	ENV
1	F7	
2	EF	
3	E7	
4	DF	
5	D7	
6	CF	
7	C7	
8	BF	
9	B7	
A	AF	
B	A7	
C	9F	
D	97	
E	8F	
F	87	
EO	7F	
1	77	
2	6F	
3	67	
4	5F	
5	57	
6	4F	
7	47	
8	3F	
9	37	
A	2F	
B	27	
C	1F	
D	17	
E	OF	
F	07	
.		
.		
.		
FF	80	(RESET VECTOR)
D	FF	

Fig. 48. Minimal program for 6502-based BMPS. Strobe pulse from OPORT (output port at 8200) is tied to input of timer on I/O board. Output of timer is tied to bit 7 of IPORT (input port at 9000).

volved is shown in Fig. 49. In this case, the first fourteen notes of "Oh, Susanna" are translated.

The process involves writing down the letter designations of each note. Based on Fig. 12, we then list the divisors which correspond to the letter designations of the notes. These numbers form the data set which is labeled FREQ in Fig. 48.

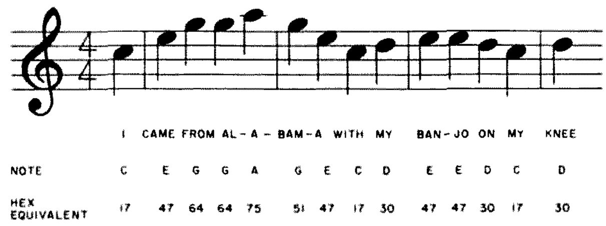

Fig. 49. Construction of data set for the first fourteen notes of "Oh, Susanna."

Selecting the octaves and the filters is a rather more arbitrary process. For the program, I selected octave 5 and filter 6. Octave 5 covers from about 500 to 1000 Hz. In this case, each of the fourteen entries in the data set OCTFIL is 56_{16}.

The data set which represents the envelope was chosen to simulate the sound of a plucked string. The envelope is one tooth of a sawtooth wave. It rises rapidly and then goes to zero linearly over the duration of the note. ■

References

1. Winograd, K., "Try Computer Composition," *Kilobaud*, July, 1977, pp. 102-108.

2. Creason, S., *How to Build a Microcomputer . . . and Really Understand It*, 73, Inc., in press.

Clayton W. Abrams K6AEP
1758 Comstock Lane
San Jose CA 95124

SSTV Meets SWTPC: Part 1

—micro-enhanced pictures

An obvious step after completing my first two SSTV projects[1,2] was to use the microprocessor to enhance SSTV pictures received over the air. This project was more complex than I originally had anticipated, and it took three months of hard work. The effort was broken down into two major areas, hardware and software. I will try to separate them as much as possible.

It is my opinion that most computer hobbyists are not willing to invest more money in their systems than is absolutely necessary. For this reason, many of the hardware functions were accomplished with software. This cuts down on hardware costs, but it increased the complexity of the software. I started first by specifying the entire system. Next I designed and constructed the hardware, and last I wrote and debugged the software. I found that most of my development problems were in the hardware and were due to poor soldering.

Concepts and Specifications

Following is a brief summary of the specifications which were placed on the project:

1. The computer program will run in 12K memory on an SWTPC 6800 computer system.
2. The system will include the design of a special analog-to-digital and digital-to-analog board with an SSTV modulator (plug compatible with the SWTPC 6800 computer).
3. A special circuit adapter attaches to an SSTV monitor which allows the SWTPC 6800 to receive an SSTV picture and place the picture in memory.
4. The enhancement computer program allows an operator to select the following options by a monitor program:

a) *Test*—This routine is used to calibrate and check the operation of the A/D and D/A card.
b) *Receive*—This option places the SSTV picture in the SWTPC memory, formatted with 128 pixels on 128 lines with 16 gray levels.
c) *Contrast*—This option transmits the SSTV picture in computer memory with 2 to F (15) times improvement in contrast. The picture can be transmitted up to F times.
d) *Binary*—This option transmits the picture in computer memory with two gray levels (black or white). The picture can be transmitted up to F times.
e) *Negative*—This option inverts the picture in computer memory to produce a negative picture which can be transmitted up to 15 times.
f) *Zoom*—This option allows the operator to zoom in on 5 loca-

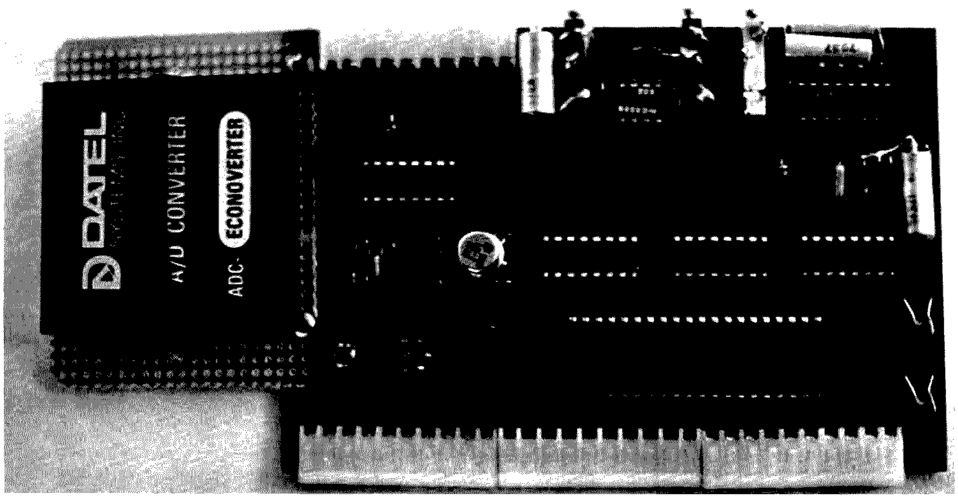

Photo A. Analog card layout — component side.

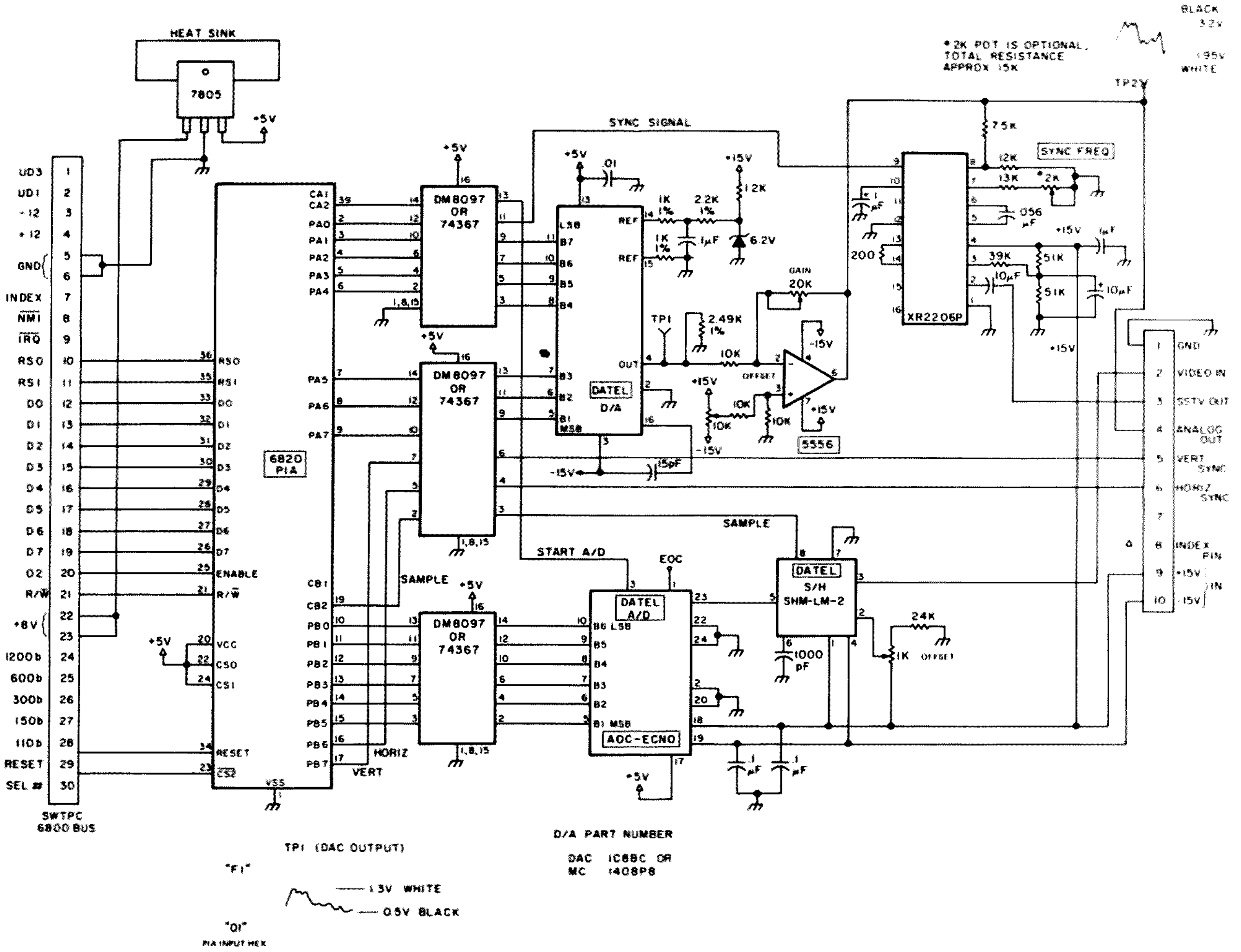

Fig. 1. Special analog card schematic.

tions on the picture in computer memory. The zoom (magnification) will be 2 times, and it can be transmitted up to F times.

g) *Transmit*—This routine transmits the SSTV picture in computer memory, without enhancements, up to F times. The routine also includes an optional gray-level generator routine which places a gray-level test pattern in memory for test purposes.

h) *Noise*—This routine allows successive SSTV pictures to be received and random noise removed. The noise reduction will be the square root of the number of pictures received (2 to F).

i) *Print*—This routine prints an SSTV picture on an SWTPC PR-40 printer. ASCII characters are substituted for each picture gray level, and the results are printed.

As you can see from these specifications, the project involved a large amount of research. I started by obtaining ADC and DAC specification sheets and also made frequent trips to the library. The ADC and DAC requirements were easy to sort out due to my electronics engineering background, but the image processing techniques were difficult to understand. After spending hours sorting through textbooks and numerous articles in technical journals, I stumbled upon a booklet published by Spatial Data Systems called "Computer Eye Handbook Of Image Processing."[3] I immediately sent a letter to the company requesting a copy of the booklet. From this booklet, I found that my project was now possible. This booklet provided me with the computer algorithms of enhancement techniques and examples of how TV picture quality can be improved.

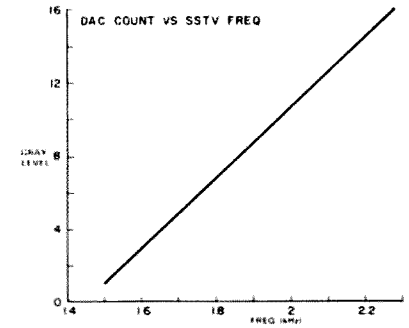

Fig. 2. Plot of analog card SSTV modulator linearity, where gray level is plotted against the SSTV modulator frequency (kHz).

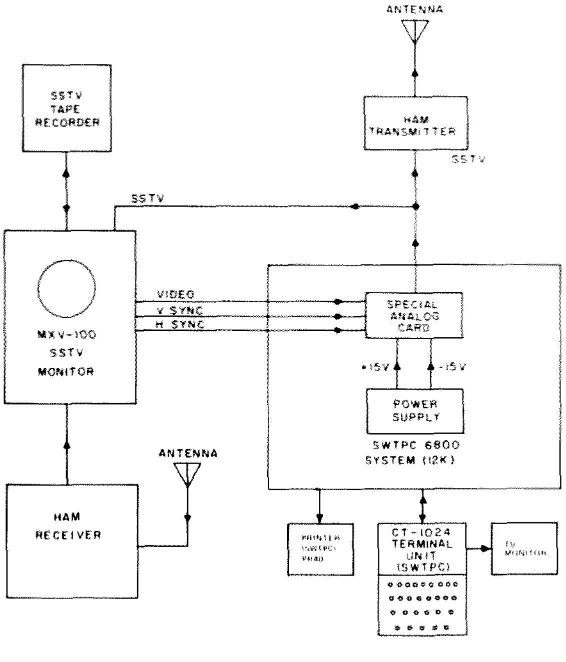

Fig. 3. SSTV enhancement program computer interface.

A picture density of 128 pixels by 128 lines was chosen for minimum computer memory size and a fixed SWTPC clocking speed. Since I decided to perform many of the enhancement techniques on a real-time basis without modifying memory, I had to allow a large amount of time between the transmission of pixels. With a density of 128 pixels per line, approximately 500 microseconds of computer instructions can be processed between the transmission of pixels. I am sure some of you are now asking, "What is a pixel?" Well, a pixel is a picture element. I defined a picture element as having 16 gray levels. This means that a pixel could be contained in four binary bits, which, in computer language, is a nibble. Since a computer byte of data contains two nibbles, an entire TV picture could be contained in 8K of memory (128 x 128/2 equals 8192).

I additionally specified that the computer control programming must be contained in 4K of memory. I was quite surprised to find that the object code used less than 3K of memory. This allows for further expansion of the program to include other features. The analog circuits did not demand fast response times. Since the pixel duration is 520 microseconds, the analog conversion rates should be no greater than about 50 microseconds. This allows about 470 microseconds worth of computer overhead between pixels. When coupled with 16 gray levels or 4 bits, binary resolution makes the total cost of the analog circuitry reasonable. With this background, I think it will now be appropriate to discuss the hardware.

The Hardware

The special hardware consists of two components: the SSTV monitor adapter and the analog card. I will discuss the analog card first, since it is the most complex.

The analog board consists of five discrete modules which were placed on a single board plug compatible with the SWTPC MP-68 mother board. Each of the modules is used as follows, and the whole schematic is shown in Fig. 1.

1. *Peripheral interface adapter*—This integrated circuit (MC6820) is used to interface the computer bus with the outside world. The module contains two 8-bit bidirectional data buses.

2. *Interface buffers (74367)*—These 3 ICs are used to buffer the PIA chip. The A side of the PIA is used for output and the B side for input. This configuration is an exact copy of the SWTPC MP-L parallel interface card. The PIA and buffers could be replaced with an SWTPC card, if you are not inclined toward hardware construction and your soldering is as bad as mine.

3. *SSTV modulator*—The SSTV modulator (XR-2206c) is a monolithic FSK function generator chip. This chip was found to perform very well in this application with a minimum number of components. The output frequency was very stable once adjusted by a frequency counter and left alone.

The sync frequency was selected by program control, when a TTL ground is applied to pin 9. The sync frequency is determined by the capacitor between pins 5 and 6 and the register on pin 7. Since most components vary slightly from their actual values, the frequency should be selected by trial and error. On my circuit, two resistors were first placed in series to total 15k (14k + 1k). The 1k resistor was exchanged until a frequency of 1200 Hz was measured on a frequency counter. A 400-Ohm resistor was finally selected. The video signal is applied to pin 8 of the IC. The voltage swing was found to be 3.2 volts (black 1500 Hz) and 1.95 volts (white 2300 Hz). These voltages were adjusted by

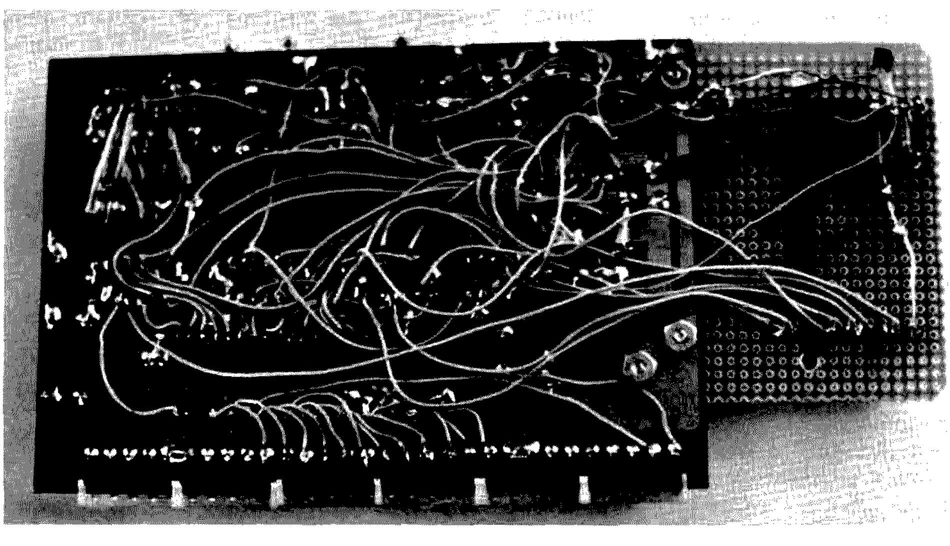

Photo B. Analog card wiring.

K/B input	SSTV frequency	Adjustment
00	1200 Hz	15k resistor
F1	2300 Hz	offset/gain
01	1500 Hz	offset/gain

Table 1.

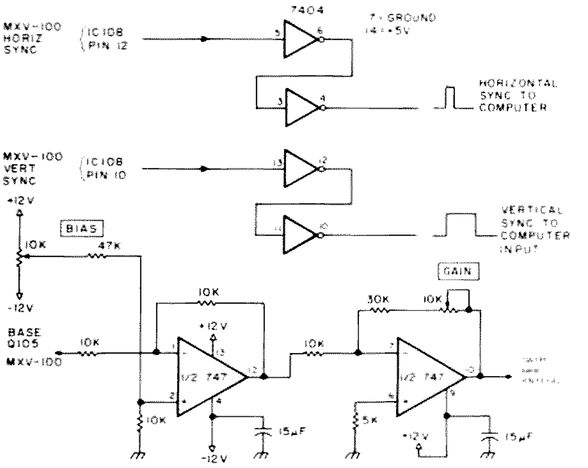

Fig. 4. SSTV monitor/computer interface schematic.

varying the gain and offset of the operational amplifier stage. This process will be discussed further in the calibration section.

4. *Digital-to-analog converter (DAC-IC8BC)*—The digital-to-analog converter selected (DAC) is an 8-bit low-cost Datel unit.[4] Other modules could be selected (e.g., MC-1408P8) which are identical. The Datel unit was selected because I had to place an order with the firm for the ADC, and the DAC was included for convenience purposes.

The DAC, as configured in my application, has an output voltage swing of 0.5 to 1.3 with an input of 01 and F1 hexadecimal programmed on the input lines. A white frequency was assigned F and black 0 by the software. The voltage scaling to the SSTV modulator was accomplished by the 5556 operational amplifier. Fig. 2 is a computer plot of the decimal input (1 to 16) versus frequency. As you can see, the DAC/SSTV modulator output was extremely linear through the total range.

5. *Analog-to-digital converter (ADC-Econo)*—The analog-to-digital converter (ADC) consists of two assemblies: sample and hold (S/H) and the ADC. These units were chosen because of their cost and performance. The number of units available for this application is enormous. However, many ADCs have specifications far in excess of this application, but their costs are high. This unit was quite large in size, but its performance is excellent and the cost is attractive.

All 6 bits of the ADC were connected to the PIA, but only 4 are used. The bit selection was accomplished by the software, which will be discussed later. The S/H is a low-cost monolithic chip. It is compatible with the ADC and requires few external components. The S/H was required since the conversion speed of the ADC is a maximum of 50 microseconds. If the analog signal was not held constant during the ADC conversion, a false value might be measured.

The sample pulses and durations were applied to the unit by the software.

The analog board was hardwire soldered on a prototype board obtained from Personal Computing Company.[5] This board is plug compatible with the SWTPC system and was obtained by mail order. The board was not large enough to contain the ADC, so a piece of vector-board was added. Photos A and B show how the board was constructed. The SWTPC interface connectors were obtained from a local Byte Shop. The Datel modules can be obtained by sending a check directly to the firm. The minimum

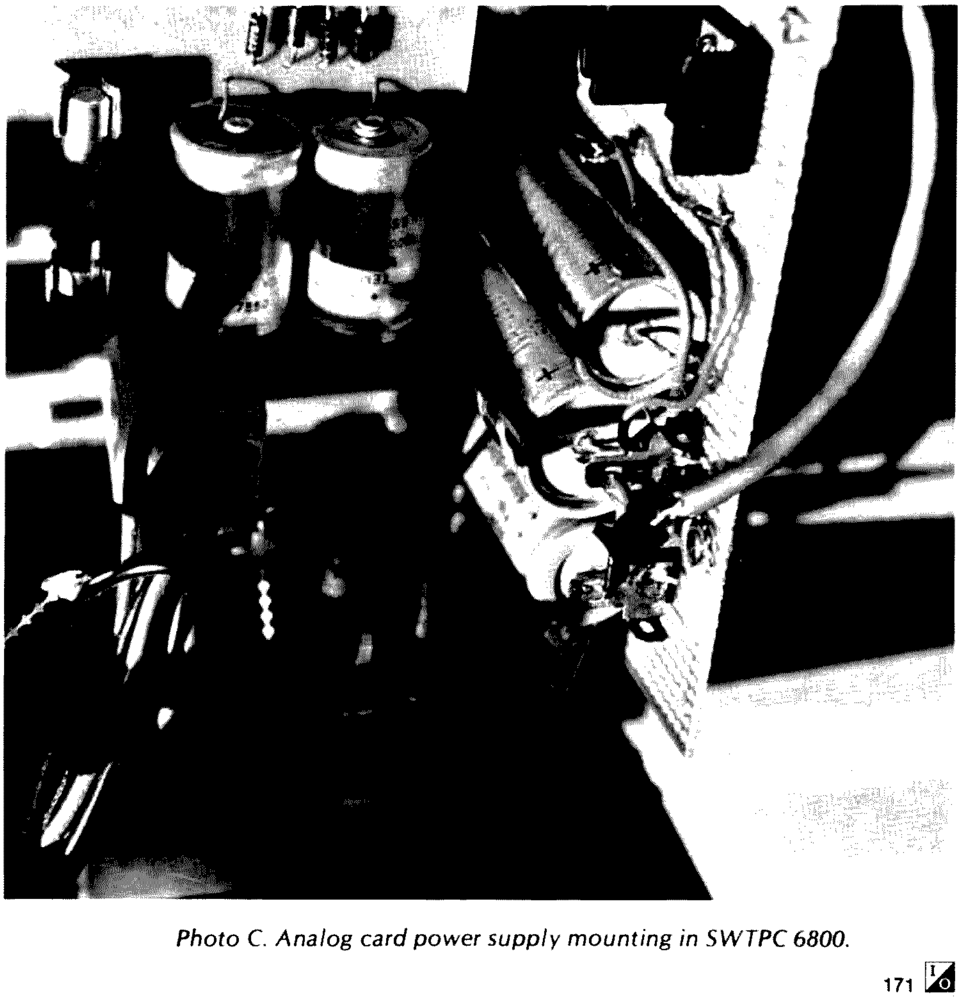

Photo C. Analog card power supply mounting in SWTPC 6800.

Photo D. Portrait on SSTV monitor directly from camera and scan converter.

order Datel will accept is $35.00. Following is the cost of each item: DAC (DAC-IC8BC)—$8.95; ADC (ADC-Econoverter)—$39.95; S/H (SHM-LM-2)—$7.95; interface board—$9.95. The total cost was $66.80. The remaining parts are common and are available from a number of mail-order sources which are listed in many publications.

A plus and minus 15-volt supply was constructed on a piece of vectorboard and placed vertically in the SWTPC MP-68 along with a transformer. Photo C shows this configuration. The power supply used 1-Amp voltage regulators (7815 and 7915), and its schematic was obtained from vendor application notes. Wires were connected directly to the analog board. The SSTV receiver interfaced with the computer analog card is shown in Fig. 3.

As you can see, the performance of the entire system is largely dependent upon the SSTV receiver. The MXV-100 monitor[6] was used because its analog front end is excellent in noise rejection and frequency response. Other units may be used, but their performance may not be the same as shown in the photos.

I will discuss the SSTV monitor interface as generally as possible, since many SSTV monitors are currently available and it would be impossible to discuss each unit. Three signals must be provided to the computer analog card:

1. *Vertical sync*—This level must be TTL compatible and swing positive when an SSTV signal is received.

2. Horizontal sync—The level of this signal should be the same as the vertical. The duration of the sync is quite critical, but, if it is not correct or is missing, the computer software will handle it.

3. *Analog signal*—The analog signal applied to the computer must be 0 to 4.84 volts positive, where 0 volts is black and 4.84 volts is white.

The signal was obtained from the base of the SSTV CRT cathode drive transistor. At this point in all monitors, the SSTV signal is demodulated and is a varying dc level which is used to change the SSTV CRT intensity. The only problem which remains is to adjust the voltage to the correct level for the ADC.

A dual 741 operational amplifier (747) was selected, since its frequency response is well within the range of SSTV. Stage 1 of the amplifier adjusts the offset and stage 2 the gain. The MXV-100 varies between 3 and 4 volts on the base of the cathode drive transistor.

The receiver interface was constructed on a vectorboard, placed in the SSTV monitor, and connected to the computer by a shielded cable.

Photo E. Same portrait transmitted from computer without enhancement. The picture has some 60 Hz noise which is messing things up slightly.

Photo F. Same portrait transmitted from the computer with a zoom enhancement on the center of the screen. This picture also contains the same 60 Hz noise.

```
                         OPT    O,NOG
      0000               ORG    $0000
      0000 CE E1D1 START LDX    #$E1D1

      0003 86 10         LDA A  #$10
      0005 AD 00         JSR    X
      0007 86 16         LDA A  #$16
      0009 AD 00         JSR    X
      000B BD E0AA       JSR    $E0AA
      000E 48            ASL A

      000F 48            ASL A

      0010 48            ASL A

      0011 48            ASL A

      0012 16            TAB

      0013 BD E0AA       JSR    $E0AA
      0016 1B            ABA

      0017 CE 8010       LDX    #$8010

      001A A7 00         STA A  X
      001C 20 E2         BRA    START
      A048               ORG    $A048
      A048 0000          FDB    START
                         END
```

Fig. 5. Digital-to-analog converter calibration program source listing.

Calibration

After completion of the hardware, the first major task was to calibrate the entire setup for the correct frequencies. This was accomplished by two computer programs, a tape recorder, and a frequency counter. I will not provide a step-by-step procedure, since the concepts are the most important point of this section.

After the analog card is functional, load into the computer the DAC computer test program which is shown in Fig. 5.

When the program is executed, the TV will go blank, and the cursor will be in the home up position. When you enter 2 keyboard hexadecimal numbers, they will be placed in the DAC and cause the SSTV modulator frequency to change. The frequency can then be adjusted by the two pots on the analog card and resistor selection. Table 1 is a listing of keyboard input values versus SSTV frequency and adjustments.

When calibrated, I made a tape recording of all frequencies by entering all 16 gray levels into the computer keyboard. Since I then had an audio tape, calibration could easily be made at some future date without a frequency counter.

The next step was to play the tape recording into the SSTV monitor and measure the analog voltage. The gain and offset were adjusted for the correct dc values. The second calibration program will be discussed in the software section (part 2) of this article. An interesting side application for this program/hardware might be to connect an amplifier and speaker to the SSTV modulator. When calibrated properly by adjusting gain and bias, you could play music with the computer. However, do not try this trick on the SSTV frequency of 14230 kHz. The QRM is bad enough, and the FCC won't like it.

Results

The overall results were quite satisfactory. Photos D and E and the PR-40 printouts (Figs. 6 and 7) best demonstrate my results. The computer pictures have been somewhat degraded, but this can be easily explained by the limited number of pixels and gray levels used.

Better video could be obtained with 256 pixels/line, but the complexity and computer requirements increase. A software expansion to 256 by 128 would require many programming changes.

The entire package explores some interesting concepts, and I am sure others will expand on my work as microprocessors are more widely used. The potential applications are just starting.

Part 2 of this article will discuss the software and object code. Flowcharts will be provided for those wishing to duplicate my work on another microprocessor. ■

Fig. 6. SSTV picture printed by the SWTPC 6800. The picture was copied over the air on 15 meters under poor conditions and placed initially over the air on 15 meters under poor conditions and placed initially on audio tape. The best of all of the pictures received was read into the SWTPC computer. This picture was then contrast enhanced by 2 times and printed on the PR-40 printer.

References

1. "SSTV Meets the SWTPC 6800," ***73 Magazine***, June, 1977, C. W. Abrams K6AEP.

2. "Title Your Pix with a Micro," ***73 Magazine***, October, 1977, C. W. Abrams K6AEP.

3. ***Computer Eye Handbook***, copywrited 1975, Spatial Data Systems, Inc., P.O. Box 249, 508 S. Fairview Ave., Goleta CA 93017.

4. Datel Systems, Inc., 1020 Turnpike St., Canton MA 02021.

5. Personal Computing Co., 3321 Towerwood, Dallas TX 75234.

6. "The W6MXV Hi-Performance Magnetic Deflection SSTV Monitor," ***SSTV Handbook***, 73, Inc., Mike Tallent W6MXV, 6941 Lenwood Way, San Jose CA 95120.

Fig. 7. SSTV picture printed by the SWTPC computer. This is a composite of 5 successive pictures which were copied by the program's NOISE routine. The picture was then contrast enhanced by 2 times and printed.

Squelchifying Cheap Receivers

—junk-box project

George Hovorka WA1PDY
John Hovorka, Jr.
674 Brush Hill Road
Milton MA 02186

The market is flooded with transistor radios that cover the police bands. They make excellent two meter monitors, except that they lack a squelch. Here is a simple squelch circuit especially designed for these receivers. This circuit uses junk transistor radio parts and can be installed in about half an hour.

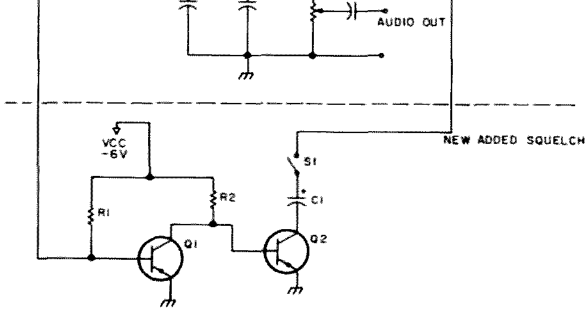

Fig. 1.

How It Works

This is a carrier-activated squelch. When a carrier is present, a negative voltage is developed with respect to ground by one of the diodes in the ratio detector. This turns transistor Q1 on, and thus brings the base of Q2 to near ground potential. Previously, Q2 had been biased on by the 10k resistor connected from its base to V_{CC}. This caused the audio appearing at the top of the volume control to flow through C1 and Q2 to ground. But now with Q2 off, the audio flows to the next stage. At the end of the transmission, when the carrier ends, Q1 turns off, causing the current to flow through R2 again. This will turn Q2 back on and will ground out the audio.

Construction

In my prototype, I used point-to-point wiring with the volume control as my base. The audio portion of these receivers is almost always positive ground. This requires PNP transistors to be used for Q1 and Q2. I used push-pull output transistors from a junk transistor radio for these. The remainder of the parts also came from the same junk radio. My receiver had a built-in ac power supply, so I removed the wiring from the battery ac switch, wired the radio permanently on ac, and used the switch for S1.

To find the control voltage for Q1, first locate the radio detector. It consists of two i-f transformers side by side with two germanium diodes close by. With the radio turned on and tuned to an FM station, put your VOM on the low voltage dc scale and connect the positive lead to ground. The case of the i-f transformer will do nicely for this. Now touch the negative probe to an ex-

posed lead of either diode. One of these should give you a negative reading. That is your control voltage.

The value of resistor R1 is determined experimentally. First connect a one megohm potentiometer in place of it. Now turn the receiver on, and with no carrier present, adjust the potentiometer so that the squelch just opens. Now remove the potentiometer, measure its value, and substitute a fixed resistor of a slightly lower value for R1. Alternatively, a one megohm potentiometer with an attached switch could be used for R1 and S1. If your receiver has a built-in ac power supply, replacing one of the filter capacitors in the power supply with a 5000 uF or larger 15 volt electrolytic capacitor will greatly reduce power supply hum from the speaker.

I am certain you will find this squelch a valuable addition to your monitor receiver. ■

Parts List

Q1, Q2—2SD364 or equivalent PNP germanium transistors
R1—390k ½ W resistor
R2—10k ½ W resistor
C1—3 μF, 10 WV dc electrolytic capacitor
S1—SPST slide switch

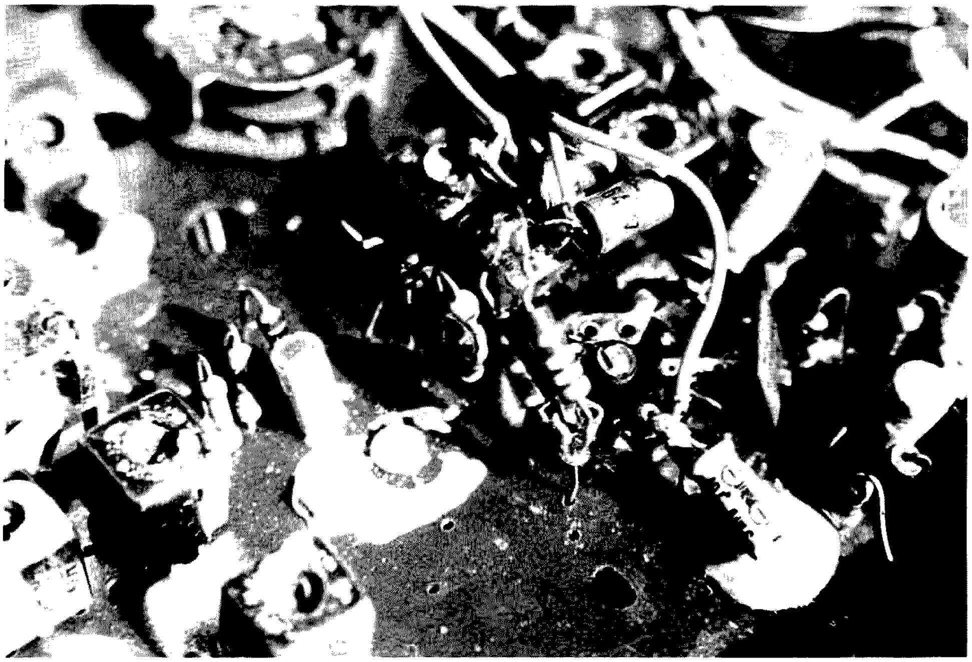

C1 is in the foreground, Q1 and Q2 are in the center, and resistors R1 and R2 are connected directly to the switch on the volume control.

Steve Herman WA7WYF
1709 Kassabian
Las Vegas NV 89104

Try FM On 29.6 MHz

—no, it's not a CB channel

It can happen at the most unexpected times. "QRZed the W6; this is VE3GVD." My handie-talkie was turned up full blast as I sat in my college journalism class taking an exam. Redfaced, I reluctantly shut off the HT . . . A scene distant in the future of amateur radio? A handie-talkie in Nevada able to chat with a chap in eastern Canada? It's happening today.

The secret is 29.6 MHz FM. Lying in the upper reaches of the 10 meter band, 29.6 is a hotbed of FM simplex activity. There are even repeaters in operation on the 10 meter FM band. But 29.6 is the 52 simplex of the 10 meter band, only *more* exciting.

The 10 meter FM band (29.5-29.7 MHz) enjoys the characteristics of both HF and VHF. When the MUF gets high enough for 10 meter sideband to come alive, 10 meter FM up the road usually pops to life. Also, 10 FM is great for covering local ground effectively while waiting for the skip to roll in.

In Las Vegas, we don't have our 10 meter repeater on the air yet, but we are very active on 29.6 FM simplex. "We" refers to a group of southern Nevada amateurs known collectively as the Nevada Amateur Radio Club (NARC). Through the use of our touchtone™ pads on our UHF handie-talkies, mobiles, etc., we have access to autopatch, fully synthesized 2 meter FM, and, of course, 29.6 FM. On 2 meters, through linking of repeaters, we can chat with Los Angeles (about 240 miles air) and, on the other end, Salt Lake City (around 375 miles air). But it's agreed, we have the most fun on 29.6 FM.

29.6 is a new addition to our remote base system. Originally, we had 52.525, the 6 meter simplex frequency, installed in our box on the mountain. Due to lack of excitement, a decision was made to yank 6 and take our chances with 10 FM. When we chatted with our first contacts cross-country on 29.6, we knew our decision to convert to 10 FM was a mighty fine one.

The mastermind of the NARC Radio System, Wayne K7WS, besides utilizing the remote base radio, has his own 29.6 base station, mobile unit, and 29.6 HT-200, all weaned out of 30 MHz commercial service. Using a combination of these radios, Wayne can carry on solid QSOs while the rest of us hear sometimes only bits and pieces of the 29.6 DX signal. Multipath distortion causes the signal to fade out of our remote base receiver (20 miles from the city). When the signal fades out on the receiver on the hill, it "fades in" usually on Wayne's 29.6 receiver at his house or mobile or hand-held due to multipath.

Such a technique as described above is called "diversity reception." This enables one to enjoy an almost fadeless signal on 29.6. In turn, if need be, Wayne can use "diversity transmission." Wayne's 29.6 base station transmitter is tuned so close to the remote 29.6 transmitter frequency that, instead of a heterodyne, the guy on the other end in Maryland, Michigan, Oregon, or wherever may only notice a slight echo effect. Of course, solid QSOs can be made without such techniques as diversity transmission and reception.

Unfortunately, familiarity with 10 FM is limited. On occasions, I will try to get a station I work on 10 sideband around 28.6 to take a listen for me on 29.6 and report back to me on 28.6. (Through the simple process of slope detection, FM signals are audible on AM/SSB receivers. And you don't even have to know what slope detection is, either.) Responses to requests to listen on 29.6 go like this: "I don't think I can hear the satellite here." "FM on *10* meters?" "You want me to listen for you in the CB band?!" 29.6 MHz and surrounding frequencies are not in the CB band, but unless we start using them, they will be. ■

Location	Call	Input	Output
Marysville WA	WR7ADB	29.59	29.69
Port Neches TX	WR5AOK	29.64	29.60
W. Patterson NJ	WR2ANW	29.54	29.64
Boston MA	WR1AGM	29.685	29.52
Baltimore MD	WR3AID	29.58	29.68
Palatine IL	WR9ALA	29.515	29.615
Wilmington DE	WR3AGR	29.52	29.62

Table 1. 10 meter FM repeater chart.

Ray Brandt N9KV
824 N. Marion
Janesville WI 53545

Build the Brute

—*unique heavy-duty power supply*

With the extensive literature on regulated power supplies, it seemed doubtful that there was much left to write about them. However, this power supply does have some unique features which have been derived from many hours of experimentation.

The power supply disconnects itself from an over-current load or short circuit, protecting its components without blowing any fuses.

It also disconnects if, for any reason, it should attempt to provide over-voltage output, protecting expensive equipment which it may be powering. Again, no fuses blow; it just disconnects.

All the power transistors can be bolted directly to their heat sinks, which are bolted directly to the chassis, providing maximum thermal conductivity and best use of available cooling area.

Equivalent source impedance is less than 5 milliohms, equivalent to a zero impedance source connected by about a foot of 16-gauge wire. No integrated circuits are used.

The power transformer was rebuilt from a large tube-type color TV set and had a core area of about 3 square inches. The primary was retained, all other windings being removed. Counting the turns of a previous 6.3-volt winding showed the voltage per turn to be 0.62, indicating that the desired 19.4 volts required 31 turns on each side of center-tap. There was just room to snugly use #12 in the available window. A pair of 100-Ampere, 100-volt piv diodes were used. An experimental dummy load showed the secondary holding up to about 18.5 volts and the trough of the ripple at 17 volts with the 43,000 uF filter capacitor.

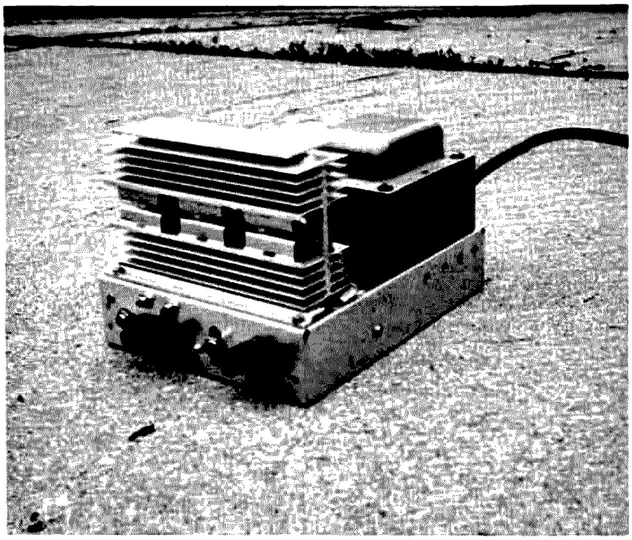

Front view.

About 26 volts dc was present at no load, comfortably below the 30-volt rating of the capacitor. A surplus computer power supply heat sink with three NPN T0-3 transistors having about 120 square inches of cooling fins was used for the pass transistor output stage. Mounted on the sink were the three 0.18-Ohm emitter-balancing resistors which assure an extremely good current sharing between the three NPN transistors. However, this accounts for a whole volt of drop at 20 Amperes. Probably, 0.1-Ohm, 5-Watt resistors would be just fine and would conserve about half a volt of drop. It was determined by experiment that 10 milliamperes into the base of the Darlington-connected driver power transistor would maintain a 20-Ampere load, indicating a beta product of about 2000, which is somewhat higher at more moderate loads.

Having committed myself to connecting the power transistor collectors to the negative output, I could find no circuit in my available literature to complete the design. I decided to build up a differential amplifier of PNP signal transistors so that the collector current of one of them would provide base current to the Darlington input stage. If the two bases are at the same voltage, the collector currents should be equal.

Initially, a 6.2-volt zener was connected between the base and collector of T1, and the base of T2 was connected to a potentiometer across the output of the supply. The current of T2 increased when the output was loaded, so it was connected to the Darlington. The potentiometer adjusted the output nicely, but, when the amplifier stage was connected, the regulation was not outstanding—the output dropped nearly half a volt under full load. So a sec-

ond 6.2-volt zener was connected between the base of T2 and the positive side of the supply as shown. With a 470-Ohm common emitter resistor, the regulation seemed perfect at full load. I had to cancel the output with a second regulated supply to permit me to use the 300-millivolt scale on my multimeter. The full-load drop was about 100 millivolts.

Noting that the output was scarcely 12 volts, the zeners were replaced with those of a 6.8-volt rating, yielding about 13.4 or 13.5 volts out of the supply. Since this was a circuit I had not seen, I was still puzzled as to just how it worked. Hooking a milliammeter in each base lead cleared it up for me. Since the bases are at roughly 7 volts, their emitters must not be far behind. They were at about 6.5 volts. Thus, about 12 mA was flowing in the common emitter resistor.

At no load, most of the current was flowing through T1, and, at full load, its current had dropped to about a milliampere, and the other 11 were flowing in T2, thus providing the needed base current to the Darlington. The current transfer from one side to the other of the differential amplifier was accomplished by the 0.1 volt change in voltage between the two bases. Dividing the 10 mA by the .1 volt indicated a transconductance of 10,000 micromhos. If the emitter resistor were increased, the total current in the amplifier would drop and there would be proportionally less to transfer from one side to the other. This could be used to limit the available current to the Darlington or to reduce the current value at which the supply shuts off. So a 5k pot was added to serve this purpose.

The interesting point which leads into the remaining features of the unit is that it simply doesn't work at all as described so far. Unless the Darlingtons have some base current, no output is produced and no voltage is available to the differential amplifier so it can draw base current through the Darlington.

I had connected a 2.7k resistor in series with a 14-volt zener to the base of the input transistor, T3, to initially provide about a milliampere of base current to get things started. This current ceases in a few milliseconds when the regulator takes over and reduces the voltage across the zener to about 3 to 11 volts, depending on load. With it permanently connected, shorting the power supply indicated about 9 Amperes current, somewhat like a foldback regulator. Raising the 2.7k resistor reduced this current, but to get it down to 2 Amperes or so made it so large that the power supply would not start under maximum desired load. So I decided to make this a momentary connection with a "start" or "on" pushbutton. The "stop" or "off" button was added which merely removes the base current from the Darlington momentarily.

About a volt of high-frequency oscillation was observed at output under moderate to heavy load. Adding the 24-Ohm resistor and 0.1 uF capacitor to ground spoiled the high-frequency gain enough to clear this up. Output ripple is less than 5 millivolts rms.

Experience had shown that a "crowbar" circuit was worthwhile. This is merely an SCR connected across the output which is triggered into conduction by a voltage higher than normal. Most circuits of this type connect the SCR

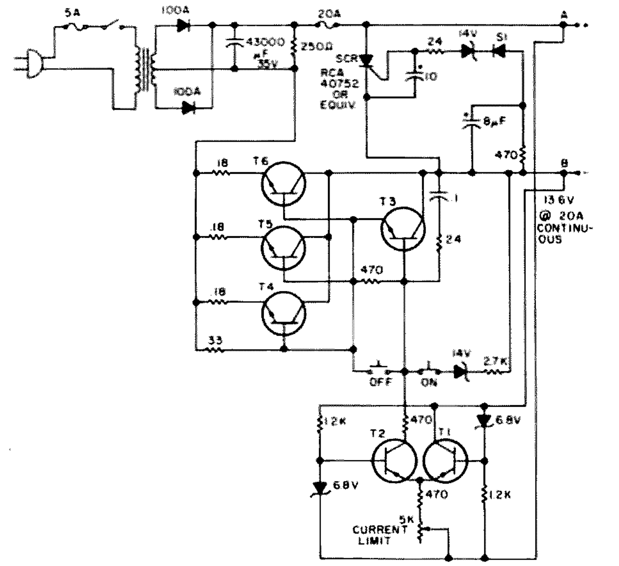

Fig. 1. Heavy-duty regulated power supply. T1-2 — 2N2906; T3 — 2N3715 or equivalent; T6-8 — RCA 40325, 2N5302, or an equivalent 15-Amp NPN.

across the filter capacitor and blow a fuse. I had intended to do this, but the negative terminal of the capacitor is at a variable voltage depending upon load, so this was impractical. As it happens now, if the SCR fires in addition to shorting the output, it disables the differential amplifier and removes base current from the pass transistors, shutting down the supply so rapidly that no fuse blows. The SCR I had available was a real monster, but, under this condition of operation, the peak current rating need be no more than 10 or 15 Amperes.

Experiment a bit with this to make sure that the SCR conducts with the voltage output somewhere between 14 and 15 volts. I had to add one diode drop to the voltage of my nominal 14 V zener to achieve this. A 470-Ohm, 1-Watt resistor serves as a minimum load on the supply so that it doesn't accidentally turn on without having depressed the start button. A small filter capacitor across it keeps noise from the load from getting back into the supply. A little rf bypassing on the way into the differential amplifier would be a good idea so that rectified rf from that 2 meter amplifier doesn't bias the power supply silly. Bypassing is simple with the negative side of the output at chassis ground.

Not to be forgotten is the cable drop between the power supply and its equipment load. A 3-foot cable using #16 wire would yield .024 Ohms for the pair, which seems small enough, but it represents half a volt drop and 10 Watts of power loss! It's better to use #12 or heavier. If the sense leads, A and B, which can be 22 gauge, are extended and brought back separately from the equipment end of the cable, the regulator will increase its output at the power supply end to compensate for the voltage drop in the cable. But try to use heavy enough wire to hold the cable drop to a quarter of a volt or so.

The output voltage of the supply is not adjustable, but then neither is its crowbar or the voltage of a storage battery which it replaces. ■

FCC

Reprinted from the Federal Register.

AMATEUR RADIO SERVICE

Administration of Telegraphy Examinations to Handicapped Applicants for Operator Licenses; Inquiry

AGENCY: Federal Communications Commission.

ACTION: Notice of inquiry.

SUMMARY: The FCC is beginning an inquiry into its rules and procedures concerning the administration of telegraphy examinations to handicapped applicants for operator licenses in the amateur radio service. The FCC is taking this action in response to several requests from handicapped applicants for waivers of the telegraphy requirements.

DATES: Comments are due by November 30, 1978 and reply comments are due by December 29, 1978.

ADDRESSES: Federal Communications Commission, Washington, D.C. 20554.

FOR FURTHER INFORMATION CONTACT:

Mr. Gregory M. Jones, Safety and Special Radio Services Bureau, 202-634-6619.

SUPPLEMENTARY INFORMATION:

Adopted: August 8, 1978.

Released: August 24, 1978.

By the Commission: Commissioner Washburn absent.

In the matter of the administration of telegraphy examinations to handicapped applicants for operator licenses in the amateur radio service, Gen. Docket No. 78-250.

Under authority contained in Sections 4(i), 303 and 403 of the Communications Act of 1934, as amended, the Federal Communications Commission is opening an inquiry into the administration of telegraphy examinations to handicapped applicants for operator licenses in the amateur radio service. The purposes of this notice of inquiry are: (1) To inform the public about the FCC's current procedures for examining handicapped applicants for amateur operator licenses, and (2) to request guidance and advice from the public about what action, if any, the FCC should take to improve the administration of telegraphy examinations to handicapped applicants for amateur operator licenses. In this notice, the Commission outlines its present policies and rules concerning the examination of handicapped applicants for amateur operator licenses, lists several options for changes in those policies and rules, and asks interested persons to comment on the direction the Commission should take in this area.

POLICY

It is the policy of the Federal Communications Commission that no otherwise qualified handicapped person should be denied an amateur radio operator license solely because of his or her handicap. It also is the policy of this Commission not to discriminate in any way against handicapped applicants for amateur operator licenses. The Commission has done, and will continue to do, everything within reason to assist the handicapped obtain amateur radio operator licenses.

WHAT DOES THE COMMISSON DO NOW TO ASSIST THE HANDICAPPED?

The Commission is aware that amateur radio is a useful and valuable pursuit for many handicapped persons. For many handicapped persons, amateur radio may provide the only contract with the "outside world." Wherever possible, the Commission encourages interested handicapped persons to study for and obtain amateur operator licenses.

Under normal circumstances, a person wishing to obtain an amateur operator license, other than a novice class license, must appear before an FCC examiner to demonstrate his qualifications. FCC amateur examinations are given on a regularly scheduled basis at each of the Commission's 28 field offices and at approximately 70 other locations throughout the country. An applicant for an amateur operator license appearing at a designated Commission examination point undertakes the telegraphy examination in a room with other (often many other) applicants. The Commission examiner plays a tape recording of a telegraphy text transmitted at an audio frequency of approximately 750 Hertz. At the conclusion of the transmission of the telegraphy text, the applicant is given a multiple choice written examination concerning the text just transmitted. If the applicant answers 80 percent of the questions correctly, he or she is given another examination covering amateur rules, principles, and procedures. If the applicant scores at least 74 percent on that examination, he or she is issued an amateur operator license.

The Commission recognizes that there are some persons who may be able to receive telegraphy but who are unable, because of a handicap, to demonstrate their qualifications in the context of a typical FCC examination environment. For example, certain persons cannot leave their homes to travel to Commission examination points. Others may be able to travel but may not be able to use their hands to write. Still others may not be able to hear the telegraphy text transmitted or read the written questions presented.

The Commission believes that it has a duty to assist handicapped applicants unable to demonstrate their telegraphy qualifications according to normal procedure to do so in other ways. To this end, the Commission has taken a number of actions to help handicapped applicants. Section 97.27 of the rules, for example, states that if an applicant is shown by physicians's certification to be the victim of a protracted disability preventing travel, he or she may be examined at home by an examiner selected by the Commission. Moreover, the Commission's Field Operations Bureau has instructed Commission field personnel to make special arrangements for the examination of the handicapped. Among the procedures routinely followed in administering examinations to the handicapped are the following:

If an applicant is unable to write, he or she may dictate his or her responses orally for transcription, or he or she may use a typewriter.

An applicant may "repeat back" his or her telegraphy copy if he or she cannot write.

A blind applicant may use a Braille printer on the telegraphy examination and dictate his or her copy.

Written questions may be read to blind or paralyzed applicants.

Severely handicapped applicants may be examined at their bedsides either by Commission personnel or by other qualified persons selected by the Commission.

Blind applicants may be given examinations prepared by the Commission in Braille.

Continued on page 206

The Multifunction Scan Can

—another IC-22S goodie

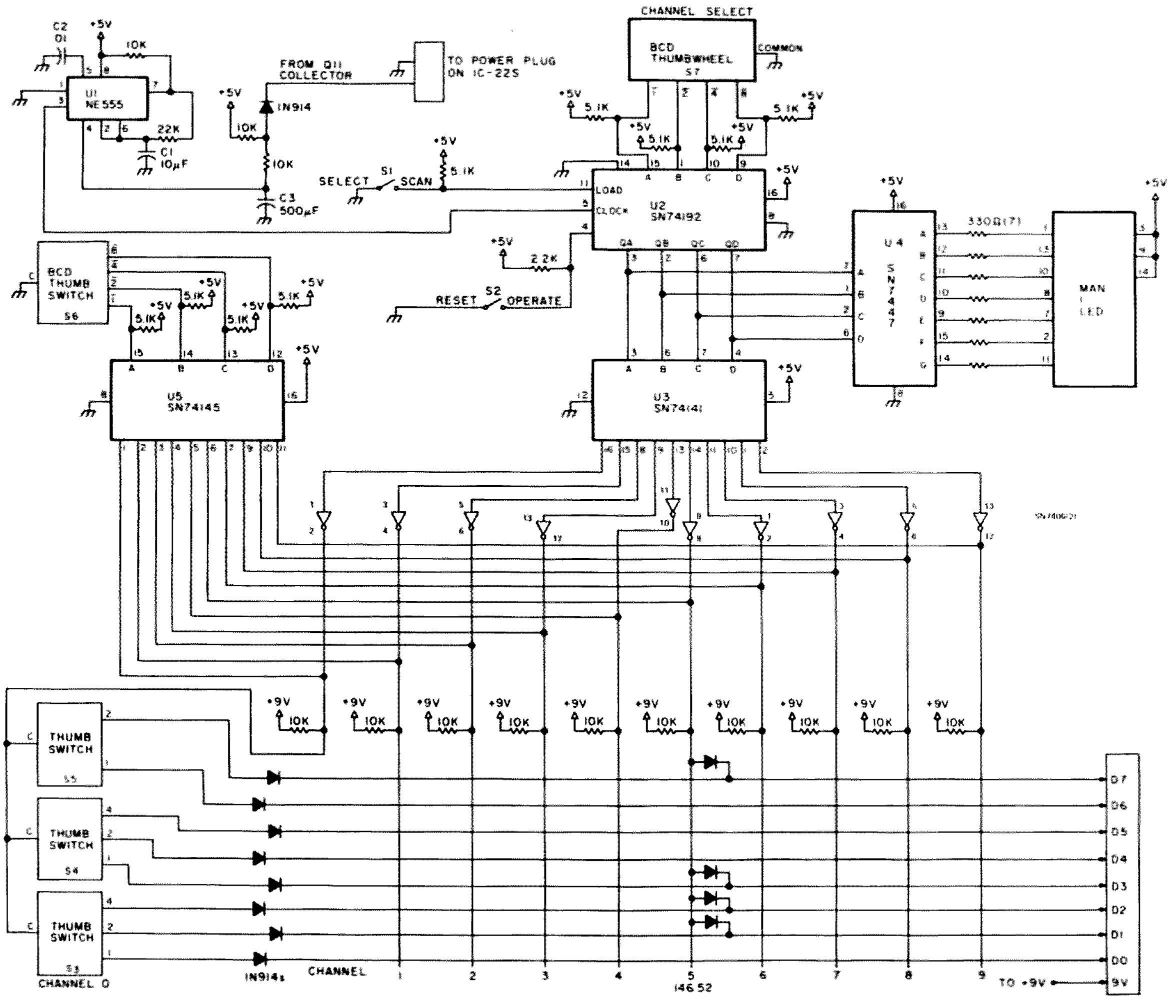

Fig. 1. The schematic diagram for the multifunction scanner. Channel 5 of the diode matrix is programmed for 146.52 for illustration.

S. E. Holzman W1IBI
J. D. Adamson W1HZH
RFD 3, Honey Brook Lane
Amherst NH 03031

The "multifunction scan can" is a simple device that will increase the operational flexibility and pleasure of owning an IC-22S. The circuit described in this article will convert the IC-22S into a versatile ten-channel scanner that provides:

- Nine preprogrammed channels plus 1 tunable channel that can select *any* valid frequency
- Blanking for any one of 9 channels
- Fixed selection of any channel
- Seven-segment LED numerical indication of channel
- Thumbwheel selection of variable channel, blanked channel, and fixed channel selection

The scanner automatically stops on a channel the instant that the squelch breaks, and resumes scanning approximately 2 seconds after the carrier disappears, if another signal does not again break the squelch. The LED readout indicates which channel, 0 through 9, is being monitored. Should a fixed channel be desired, that mode is easily selectable. Operation in channel 0 allows the transceiver frequency to be selected by a set of thumbwheel switches. Any valid IC-22S frequency can be dialed up, making this a very valuable feature. For simplicity, a lookup table, Table 1, is used for frequency identification when selecting channels with the octal thumbwheel set. If, while scanning, it is desired to skip some channel, the blanking thumbwheel is set to that channel number and the channel is totally ignored.

Circuit Description

The scanner is illustrated schematically in Fig. 1. It interfaces to the IC-22S through the transceiver's 9-pin accessory socket (J5) and the 4-pin power plug. The simple transceiver modifications will be described in detail later.

The scanner consists of seven ICs, five thumbwheel switches, and a seven-segment LED readout. For those who desire a kit approach, a drilled PC board is available from the authors.*

The heart of the system is an SN74192 (U2) programmable decade counter that is driven by a 555 (U1) clock gated by the IC-22S squelch signal. The clock circuitry is set up to allow the 74192 to count (scan) at a rate of approximately one second per channel. When a signal is present, the squelch line from the IC-22S drops low, inhibiting the clock signal to the counter (U2). The scanner thus dwells on that frequency. When the squelch line goes high, the enable line of the clock (U1) is slowly charged up to 5 V through R3 + R4 and C3, thus allowing the 74192 to resume counting. The time delay, resulting from C3 charging through R3 and R4, prevents the scanner from taking off between transmissions, but allows the scan to continue if the channel becomes quiet. The reset switch will override this function and force the scanner to continue in the middle of a transmission if desired.

*A drilled, plated board with documentation is available from the authors ready for assembly for only $10.50 including postage.

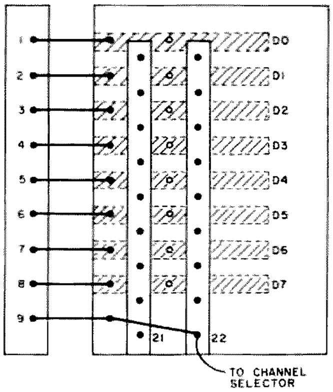

Fig. 2. The required wiring modification for the remote programming of the IC-22S through the accessory socket J5.

The fixed "channel select" function is derived by forcing the 74192 (U2) into its load mode by grounding pin 11 and addressing the desired channel, 0 through 9, with the "Channel Select" thumbwheel. In this mode, the counter's output is simply the channel addressed, for it cannot scan.

The output from the 74192 counter drives a 74141 (U3) BCD-to-decimal decoder that addresses the channel matrix and an SN7447 (U4) that drives the LED channel indicator. The output of the SN74141 is ORed with the SN74145 (U5) output, which allows the blanking of any channel, 1 through 9, as selected by the "Blank Channel" thumbwheel.

The channel matrix makes use of diodes for the programming of channels 1 through 9 just the same as the IC-22S does normally. The diode code is given in the IC-22S manual, pages 22 through 24. Channel 0, however, connects a set of thumbwheel switches to the address lines, allowing any valid frequency code to be dialed up at the flick of the switch. This feature alone is extremely useful. The actual frequency is obtained by using the conversion chart given in Table 1. The chart approach was used here because of its simplicity and savings in circuitry over a direct readout system.

IC-22S Modification

Some simple modifications must be made to the IC-22S to interface the scanner and transceiver together. The modifications are not difficult; however, care should be exercised to prevent damage to the unit and to ensure good workmanship.

The first step is to open up the IC-22S and locate

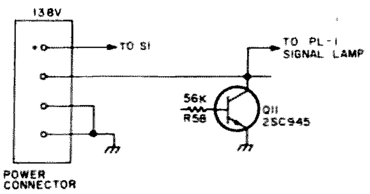

Fig. 3. The squelch line connection, illustrated schematically, between Q11 and the vacant pins on the power input plug.

FREQUENCY	S5	S4	S3	146.490	2	1	4	147.000	2	5	6	147.510	3	2	0
				146.505	2	1	5	147.015	2	5	7	147.525	3	2	1
146.010	1	5	4	146.520	2	1	6	147.030	2	6	0	147.540	3	2	2
146.025	1	5	5	146.535	2	1	7	147.045	2	6	1	147.555	3	2	3
146.040	1	5	6	146.550	2	2	0	147.060	2	6	2	147.570	3	2	4
146.055	1	5	7	146.565	2	2	1	147.075	2	6	3	147.585	3	2	5
146.070	1	6	0	146.580	2	2	2	147.090	2	6	4	147.600	3	2	6
146.085	1	6	1	146.595	2	2	3	147.105	2	6	5	147.615	3	2	7
146.100	1	6	2	146.610	2	2	4	147.120	2	6	6	147.630	3	3	0
146.115	1	6	3	146.625	2	2	5	147.135	2	6	7	147.645	3	3	1
146.130	1	6	4	146.640	2	2	6	147.150	2	7	0	147.660	3	3	2
146.145	1	6	5	146.655	2	2	7	147.165	2	7	1	147.675	3	3	3
146.160	1	6	6	146.670	2	3	0	147.180	2	7	2	147.690	3	3	4
147.175	1	6	7	146.685	2	3	1	147.195	2	7	3	147.705	3	3	5
146.190	1	7	0	146.700	2	3	2	147.210	2	7	4	147.720	3	3	6
146.205	1	7	1	146.715	2	3	3	147.225	2	7	5	147.735	3	3	7
146.220	1	7	2	146.730	2	3	4	147.240	2	7	6	147.750	3	4	0
146.235	1	7	3	146.745	2	3	5	147.255	2	7	7	147.765	3	4	1
146.250	1	7	4	146.760	2	3	6	147.270	3	0	0	147.780	3	4	2
146.265	1	7	5	146.775	2	3	7	147.285	3	0	1	147.795	3	4	3
146.280	1	7	6	146.790	2	4	0	147.300	3	0	2	147.810	3	4	4
146.295	1	7	7	146.805	2	4	1	147.315	3	0	3	147.825	3	4	5
146.310	2	0	0	146.820	2	4	2	147.330	3	0	4	147.840	3	4	6
146.325	2	0	1	146.835	2	4	3	147.345	3	0	5	147.855	3	4	7
146.340	2	0	2	146.850	2	4	4	147.360	3	0	6	147.870	3	5	0
146.355	2	0	3	146.865	2	4	5	147.375	3	0	7	147.885	3	5	1
146.370	2	0	4	146.880	2	4	6	147.390	3	1	0	147.900	3	5	2
146.385	2	0	5	146.895	2	4	7	147.405	3	1	1	147.915	3	5	3
146.400	2	0	6	146.910	2	5	0	147.420	3	1	2	147.930	3	5	4
146.415	2	0	7	146.925	2	5	1	147.435	3	1	3	147.945	3	5	5
146.430	2	1	0	146.940	2	5	2	147.450	3	1	4	147.960	3	5	6
146.445	2	1	1	146.955	2	5	3	147.465	3	1	5	147.975	3	5	7
146.460	2	1	2	146.970	2	5	4	147.480	3	1	6	147.990	3	6	0
146.475	2	1	3	146.985	2	5	5	147.495	3	1	7				

Table 1. Frequency conversion.

the nine-pin accessory plug, J5. Remove the wire attached to pin 1, tape it over, and store it out of the way. As shown in Fig. 2, connect wires from channel 22 of the diode matrix to the 9-pin plug, starting with D0 to pin 1 and ending with D7 on pin 8 and the 9-volt line from channel 22 to pin 9.

The second part of the modification requires a wire to be connected from the collector side of Q11 in the IC-22S to an empty pin on the power plug as shown in Fig. 3. This is the squelch line that drops low when the squelch is broken. The remaining empty terminal on the power plug should be tied to ground and used to carry ground to the scanner.

After very carefully checking for accuracy and for workmanship, the IC-22S can be reassembled. Note that these modifications have absolutely no effect upon the barefoot transceiver performance. The only difference is that channel 22 is now reserved for the scanner when it is plugged in.

The only remaining task is the fabrication of the wiring harness to tie the two units together. Use the pin 9 accessory plug and the power plug provided.

Operation

Using the scanner is straightforward. In the scan mode, the scanner will switch through the programmed channels, stopping whenever activity is present and starting up again when activity terminates. If you want to start scanning when the scan is locked on a station, push the "Reset" switch; should you wish to bypass a busy channel, dial it up with the "Blank" switch. To monitor a programmed channel, switch the mode switch to "Select" and address the desired channel with the "Channel Select" switch. The LED display will confirm the channel. By selecting channel 0 and using the conversion table in Table 1, any valid IC-22S frequency can be dialed up, thus eliminating the need to program any of the other 21 transceiver channels.

The multifunction scan can will add utility to the IC-22S transceiver for a very minimal cost and will provide performance that is impossible to match elsewhere.■

Be A Weather Genius

—eavesdrop on GOES

Author's note: As this article goes to press, some new developments bear mentioning:
1. The amateur price schedule is current but the commercial schedule is not. Contact Microcomm (SASE, please) for current prices and specifications. Paul is also working on implementing the converter with a smaller number of boards, so you should get on the mailing list.
2. The mounting arrangement in Fig. 2 is no accident. The modules should not be mounted directly to the metal panel, as undesirable coupling and detuning will occur. In the case of the prototype system, the modules are mounted to a G-10 glass baseplate (PC stock with no copper), using standoffs. This plate is then mounted on the panel using a second set of standoffs. Another simple but effective approach is to mount the converters from below using a 3" chassis. Cutouts on the chassis will permit clearance for the connectors and feedthrough caps, while allowing the ground plane board surface to mate with the chassis using the corner mounting holes and machine screws and nuts.
3. The European version of GOES (METEOSAT) is now up over the Greenwich Meridian and functioning well in providing WEFAX to western Europe. The Japanese have successfully implemented their satellite over the western Pacific, and an unused U.S. GOES spacecraft is being moved over the Indian Ocean until the U.S.S.R. makes progress with its program. For detailed information on any of these developments, contact: Coordinator for Direct Readout Services, S122, NOAA/NESS, U.S. Department of Commerce, Washington DC 20233.

Ralph E. Taggart WB8DQT
602 S. Jefferson
Mason MI 48854

In an earlier review article in *73*,[2] I outlined some of the problems facing amateurs wishing to use the new GOES (geostationary operational environmental satellite) system. The GOES satellite program is an outgrowth of experiments with the ATS (applications technology satellite) spacecraft. The ATS satellites are located in geostationary orbits and have been used to generate moderately high resolution pictures of the Earth disc and for hemisphere-wide relay of these pictures and other meteorological data as part of the WEFAX (weather facsimile) program.

The ATS satellites transmit on a frequency of 135.6 MHz, which makes it relatively easy to set up receiving equipment. Since the satellites are in geostationary orbits (located over the equator at an altitude of approximately 22,300 miles), the spacecraft need not be tracked — the antenna is simply aligned permanently on the satellite of interest.

Operating frequency	1691.0 MHz
Modulation	FM
Deviation	±9 kHz
Ground signal level	-134 dBm
Video mode	APT
Video subcarrier	2400 Hz
Video modulation	AM
Black level	minimum (4%)
White level	maximum (90%)
Line rate	4 Hz (240 lines/min.)
Frame rate	200 seconds
Number of lines	800
Video bandwidth	1600 Hz
Aspect ratio	1:1
Direction of horizontal scan	left to right
Direction of vertical scan	top to bottom

Table 1. Rf and video format data for GOES WEFAX operations.

This, coupled with the fact that the ATS satellites transmit on a regular schedule, made the WEFAX program quite popular with satellite buffs, despite some problems with the system. The 135.6 MHz frequency is also used for air traffic control, resulting in severe aircraft interference in some locations, and Faraday rotation is severe at this frequency, resulting in pronounced polarization shifts as the signal travels from the satellite to the ground station. When word was relayed from the Satellite Service that the experimental ATS satellites would not be replaced when they eventually failed, the news was not greeted with enthusiasm.

The WEFAX program would be continued, however — even expanded greatly — in conjunction with the new GOES satellite program. The reason for the concern was that the new GOES transmissions would be made at a frequency of 1691 MHz — hardly a frequency conducive to throwing together a quick receiving system. An NOAA technical memorandum[1] attempted to provide some guidance for setting up a suitable downconverter, and, although it was a budget system by government standards, it involved the use of a 10-foot parabolic antenna and approximately $3500 worth of hardware — far more than most stations have invested in an entire ground station. Equally discouraging was that this system did not have a large performance margin, indicating little latitude for substitution of system elements or cost paring.

In my review article, I suggested that the talents of radio amateurs involved in microwave work might well be applied to the design of a cost-effective S-band downconverter for GOES use. Although there were times when the picture looked pretty dim, that initial optimism has proven to be justified, and there are now several routes to GOES reception that the average satellite enthusiast can afford.

Before I discuss those options, I should briefly discuss the rf and video characteristics involved with

GOES WEFAX transmissions. These are summarized in Table 1. The actual video transmissions are in the APT video mode, so any display system (CRT or FAX) that is compatible with the mode may be used to display the pictures. In the review article, I summarized some of these, while other options are considered in the *Weather Satellite Handbook*,[3] available from *73*, Inc. The APT pictures are transmitted on FM with a nominal deviation of ±9 kHz. This is precisely the same signal format that was used for ATS and ESSA satellite transmissions so that any of the basic satellite receivers may be used with success as an i-f system. Options in this department are covered in a number of my previous publications.[2,3,4]

In fact, then, what is required to get into the GOES satellite business is a suitable antenna and S-band downconverter working into the regular satellite receiver. Suitable i-f frequencies would involve one of the channels presently used for VHF satellite operations – 135.6 MHz (ATS), 137.5 MHz (primary NOAA), or 137.62 MHz (old ESSA frequency and backup NOAA). Let's look at some converter options and then determine the antenna requirements.

One possible approach is the home construction of the complete converter system. John Yurek K3PGP, who is very active in EME at 432, 1296, and 2304 MHz, has developed a number of interesting approaches to S-band converter design, including a complete receiver system that is far easier to align than most two meter systems. I have tried many of John's ideas, and they work like a charm. John will be preparing some articles on his system shortly, so I won't steal any of his thunder. If you are interested in home construction of the S-band front end, then contact John or await his articles – you can't go wrong.

Most satellite buffs feel that they lack the experience or instrumentation to attempt a microwave construction project. What is needed for these individuals is a proven cost-effective commercial package that will put them on 1691 MHz without breaking the bank. The answer to this requirement has come about through the efforts of another amateur, Paul Shuch WA6UAM. Paul is a microstripline designer engineer who has published an extensive series of microstripline designs in *Ham Radio* magazine. Paul started his own company (Microcomm, 14908 Sandy Lane, San Jose CA 95124) to provide inexpensive microstripline modules for 432, 1296, and 2304 MHz operations. Recently, Paul has gotten into the GOES business, marketing a complete line of modules that make it possible to assemble a quality downconverter at reasonable cost. Fig. 1 shows a block diagram of the Microcomm downconverter, while the converter itself is illustrated in Fig. 2.

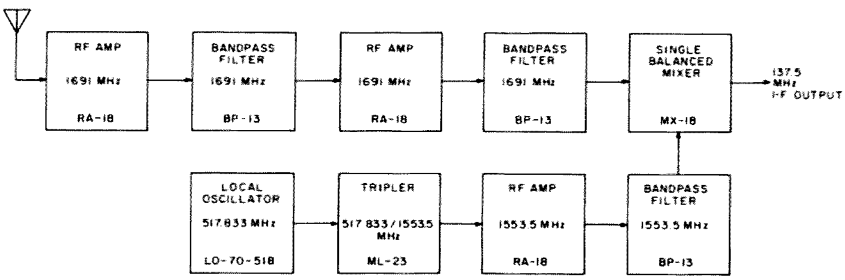

Fig. 1. System configuration for the Microcomm WEFAX downconverter.

Basically, the system employs two rf stages, each rated at 12 dB gain with an NF of 3 dB. Bandpass filters are employed between the two amplifiers and between the second rf amp and mixer to provide overload protection from microwave operations such as radar and to improve the noise figure of the system. The mixer is a single balanced type with a conversion loss of 7.5 dB and 25 dB of image rejection with a 135-138 MHz i-f. The local oscillator chain features a precision 518 MHz signal source, a diode tripler to 1555 MHz, an active amplifier, and a 1555 MHz bandpass filter to clean up the LO injection to the mixer. The extensive use of bandpass filtering in the system is one of the reasons for the exceptional performance of the system.

Table 2 summarizes the prices for the various modules that make up the system. Note that there are two price schedules – amateur and commercial. The amateur schedule is for bona fide radio amateurs (you must state your call when ordering) and is maintained by Paul as a service to the amateur community. Industrial, educational, or other individual customers must use the commercial schedule. All the modules are constructed on double-sided G-10 board with the ground plane retained on one side and the microstripline elements etched on the other. Tuning and matching is accomplished at the factory using precision glass trimmers on the microstripline elements. Gold-plated SMA connectors are used for all input and output connections with the exception of the i-f output connector, which is a BNC. The modules on the

Fig. 2. The author's S-band GOES downconverter assembled from Microcomm circuit modules. The top row of modules (from left to right) includes the first rf amp (1691 MHz), a bandpass filter (1691 MHz), the second rf amp (1691 MHz), and the single balanced mixer for the 1691 to 137 MHz frequency conversion. The bottom row (again, from left to right) has the precision 518 MHz frequency source, a diode tripler, an active 1555 amplifier, and a bandpass filter at 1555 MHz. RG-142/U is used to interconnect all modules with RG-58 foam coax at the i-f output. All of the active modules operate on 12 V dc and can be powered from the receiver power supply. The modules shown here are the amateur grade versions that are mounted on standoffs. The commercial grade modules are individually packaged in sealed aluminum enclosures.

	Amateur	Commercial
Rf Amplifier 1691 or 1553.5 MHz	RA-18 $64.95	RA-18P $129.00
Bandpass filter 1691 or 1553.5 MHz	BP-13 $21.95	BP-18P $40.00
Balanced mixer 1691/137.5 MHz	MX-18 $32.95	MX-18P $129.00
LO tripler 517.833/1553.5 MHz	ML-23 $22.95	ML-18-3P $40.00
LO module 517.833 MHz	LO-70-518 $75.95	LO-70-518P $250.00
20 cm RG-142/U jumpers with SMA plugs on both ends	$10.00	$9.00
RG-142/U	$1.30/ft.	
SMA plugs	$3.64	

Table 2. S-band downconverter modules available from Microcomm, 14908 Sandy Lane, San Jose CA 95124. See text for the operational differences between the amateur and commercial price schedules. Most modules, with the exception of the LO-70-518, are available from stock to 3 weeks. The LO-70-518 requires a precision crystal oscillator assembly, and an ordering lead time of 3-4 months is necessary, so order early, at least for the LO assembly. The frequencies noted above (in regard to the LO chain) assume an i-f frequency of 137.5 MHz. Converters can be supplied for any i-f in the VHF region, so specify the precise i-f desired when ordering. Modules in either price category are fully tuned at the factory, and, given the test equipment available to most of us, further tinkering with tuning is neither required nor desirable.

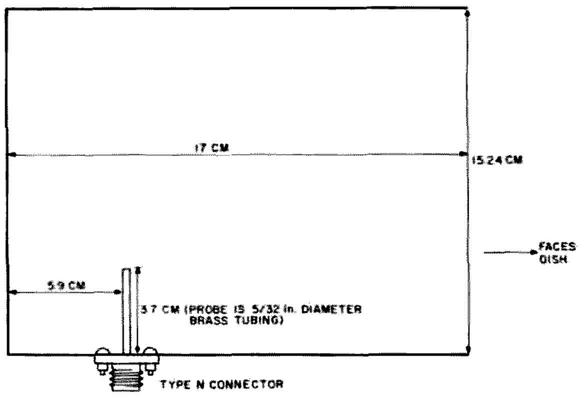

Fig. 3. Diagram of a feed horn assembly, fabricated from a 3 lb. coffee can and suitable for use with a wide variety of parabolic dish antennas. This horn, with its various fixed dimensions, was adapted by the author from data supplied by K3PGP. Very slight changes in the length of the probe and its distance from the back of the horn could probably improve its performance, but this "averaged" version works quite nicely. Obstructions inside the horn, exclusive of the brass probe, should be kept to a minimum, so the heads of the mounting screws for the type-N connector should be inside the can with the nuts and screw extensions on the outside. The plastic cap of the can can be retained for weatherproofing, if desired. The focal point of the dish should fall about 2" inside the open mouth of the horn, and any obstruction of the open end of the horn should be avoided.

amateur schedule come completely tuned but unpackaged. The modules can simply be mounted on standoffs, as illustrated in Fig. 2. The commercial modules are packaged in sealed aluminum enclosures and are rigorously environmentally tested, so you are getting something for the additional cash. The rf amps will function over a temperature range of -30 to +54° C., making mast mounting of the preamps practical in any climate. Both the amateur and commercial modules interconnect with RG-142/U coax (double-shielded with teflon dielectric) jumpers equipped with SMA plugs. Microcomm can supply the cable and plugs or a complete set of assembled jumper cables. Using the amateur schedule, a complete downconverter, including jumper cables, can be assembled for less than $400. Most of the modules are available from stock to 3 weeks, but the LO module requires considerable lead time because of the delay in obtaining the high-accuracy crystal that is employed. If you want to go the Microcomm route, you should order the LO module 3-4 months in advance to assure that it will be ready when you need it. Your precise i-f frequency should be specified when ordering to facilitate factory tuning of the various modules in the LO chain. 137.5 MHz is the standard i-f frequency and will speed the processing of the LO module slightly, so keep this in mind.

Antennas

The choice of an antenna system depends on a number of factors, so let us digress for an analysis of the rf link involved in the GOES system. The first thing you want to determine is the noise threshold of the receiving system. The thermal noise level of the system can be calculated from the formula:

$$\text{TNL} = -174 \text{ dBm} + 10 \log \text{BW} + 10 \log \text{NF},$$

where: BW = i-f bandwidth (30 kHz), and
NF = 2.2 (3.4 dB system noise figure for the Microcomm unit).

$$\begin{aligned}\text{TNL} &= -174 + 10\log(3 \times 10^4) + 10\log(2.2)\\ &= -174 + 10\,(4.602) + 10\,(0.3424)\\ &= -174 + 46.02 + 3.42\\ &= -124.6 \text{ dBm.}\end{aligned}$$

If you have an internal noise level of -124.6 dBm when the Microcomm unit is used ahead of a low-noise receiver for the i-f, the incoming signal must have a level greater than -124.6 dBm if you are to have a positive signal-to-noise ratio (SNR). What you need to know now is the signal level that can be expected from the satellite. The EIRP of the GOES transmitter is +54.4 dBm, so you need to compute the path loss to determine the ground signal level. The path loss (L) can be determined from the formula:

$$L = |10 \log(4\pi)^2 \times 100|/9 + 20 \log DF,$$

where: D = range (35,788 km), and
F = 1691 MHz.

$$\begin{aligned}L &= 10\log(1.753 \times 10^3) + 20\log(35,788 \times 1691)\\ &= 10\,(3.243) + 20(7.78)\\ &= 32.43 + 155.6\\ &= 188 \text{ dB.}\end{aligned}$$

The ground signal level can be found by subtracting the path loss from the satellite EIRP:
Ground signal level = +54.4 - 188 = -133.4 dBm

Thus, ignoring cable losses and with no antenna gain, the satellite signal is 9 dB below the system noise threshold (-124.6 - 133.6). This 9 dB plus the addition of 12-14 dB required for noise-free pictures must be made up with antenna gain.

A parabolic antenna is the easiest way to come up with the required gain, but, before you consider the details of such an antenna, you need to have some way to feed parabolas in general. The tin-can feed horn antenna

diagrammed in Fig. 3 was derived from data supplied by K3PGP and does an excellent job. This feed horn has gain of approximately 9 dBi, and, if the figures for the rf link are accurate, it should just be possible to hear the satellite on the feed horn (SNR = 0). In fact, the satellite is audible on just the horn, substantiating the link calculations and the performance claims of the Microcomm system.

Gain for a parabolic antenna is a function of the area of the reflector. Since the area function involves the square of the radius, doubling the radius or diameter of the dish raises gain by a factor of 4 (6 dB). Fig. 4 indicates the gain (dBi) of several common dish sizes at 1691 MHz. Since this system is 9 dB down without the antenna, the system SNR can be calculated by subtracting 9 dB from the antenna gain, so the SNR values for the various antennas are also plotted. You require an SNR of +12 dB for noise-free pictures with most display systems, so the gain margin of the system (gain above this value) has been calculated by subtracting 12 dB from the system SNR.

Dish diameter	Source	Gain	SNR	Margin
2 ft.	aluminum "saucer sled"	18 dBi	+9 dB	-3 dB
4 ft.	surplus	24 dBi	+15 dB	+3 dB
5 ft.	UHF TV dish	26 dBi	+17 dB	+5 dB
6 ft.	surplus	27.5 dBi	+18.5 dB	+6.5 dB
7 ft.	UHF TV dish	29 dBi	+20 dB	+8 dB
10 ft.	surplus	32 dBi	+23 dB	+11 dB
12 ft.	K2RIW stressed	34 dBi	+25 dB	+13 dB

Fig. 4. Antenna gain (dBi), system SNR, and system gain margin for various sized dish antennas at 1691 MHz when used with the Microcomm converter.

The smallest usable antenna with the Microcomm system is a 2-foot parabola made from an aluminum saucer sled (don't bother with surfacing the newer plastic versions). Although the pictures are not noise-free with the Microcomm system, they will display reasonably well if filtering is employed in the video system. Surplus 4-, 6-, or 10-foot antennas are ideal, although they can be quite heavy. Suitable antennas can also be made up from 5- or 7-foot UHF TV parabolas resurfaced with window screen to improve the effectiveness of the dish surface.

Proper placement of the feed horn is with the focal point of the dish 1-2 inches inside the mouth of the horn. If you are using a UHF TV dish, you can use the position of the original feed as a rough guide, moving the feed slightly to optimize gain. The same approach can be taken with a surplus dish that still has the original feed. If the feed is missing, you can compute the focal length as shown in Fig. 5. Use a length of board as a straightedge, laying it across the face of the dish so that the board crosses the dish center. Measure the distance (D) from the center of the edge of the board in contact with the dish to the center of the parabola. Also measure the diameter of the dish, and take 1/2 of this value as the dish radius (R). The focal length of the dish can now be calculated from the formula:

$$R^2 = 4AD,$$

where A = the unknown focal length,
D = the measured distance to the dish center, and
R = the dish radius (1/2 the diameter).

This formula will work for any units of measure, as long as the same units are used for all dimensions. In my case, my dish had R = 24" and D = 7.5". Substituting in the formula, I get:

$$(24)^2 = 4(A)(7.5)$$
$$576 = 30(A)$$
$$A = 576/30$$
$$A = 19"$$

Since the focal point should fall about 2" inside the horn, I set the feed up so the open end of the horn was 17" from the dish face. Movement of less than 0.25" was sufficient to optimize gain.

Polarization will vary depending upon the azimuth of the satellite as seen from your location. Initial mounting should permit rotation of the feed to optimize polarization, after which it can be locked in place.

Directions for aiming antennas for geostationary satellites are covered in the *Weather Satellite Handbook*.[3] In order to use these techniques, you must know the location of the satellite you wish to copy. GOES E (GOES 1) is located over the equator at 75° W. longitude, while GOES W (SMS-2) is located over the equator at 135° W. longitude.

The I-f Receiver

Virtually any receiver suitable for polar orbiting satellite work should do for the i-f. I am using a receiver built up from a VHF Engineering kit and described in a previous article in *73*.[4] I cannot emphasize too greatly the requirement for a low-noise front end at the VHF i-f frequency. Under no circumstances should you settle for anything higher than a 3 dB NF, and you should try for 1.5-2 dB if you can get it. Most VHF satellite receivers have an i-f bandwidth of 30 kHz. Satellite deviation requires only 18 kHz bandwidth, but the added bandwidth is usually used to accommodate the Doppler shift encountered with the polar orbiting spacecraft. You have no Doppler to contend with in the case of the GOES spacecraft, but you do have thermal drift in the local oscillator chain of the S-band downconverter. The 30 kHz bandwidth provides the latitude required under most thermal regimes. You can gain an additional 3 dB in system margin by going to a standard 15 kHz i-f. Based on my own experience with the roll-off characteristics of the common filters, you can accommodate the satellite deviation. The major drawback with this approach is that an afc loop would be almost mandatory to center the incoming signal in the narrow passband of the receiver. If you care to modify your receiver for afc, you might want to consider this approach.

If the receiver has provisions for a COR function, you can use the COR circuit to key up the recorder for unattended operation. This will, however, result in some wasted tape, as the satellite is only transmitting video for a maximum of 460 seconds out of the 600 seconds (10 minutes) in each scheduled transmission slot. Although

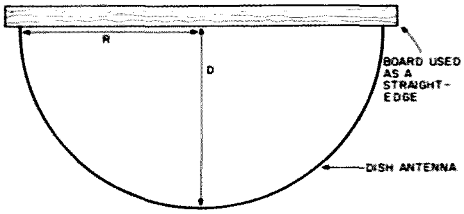

Fig. 5. Diagram of the technique for approximating the focal length of a surplus dish antenna. The two values you must measure are the radius (R) and the distance (D) from a straightedge across the face of the dish to the dish center. The text describes the formula for computing the unknown focal length from these values. The depth of the dish has been greatly exaggerated for the sake of clarity.

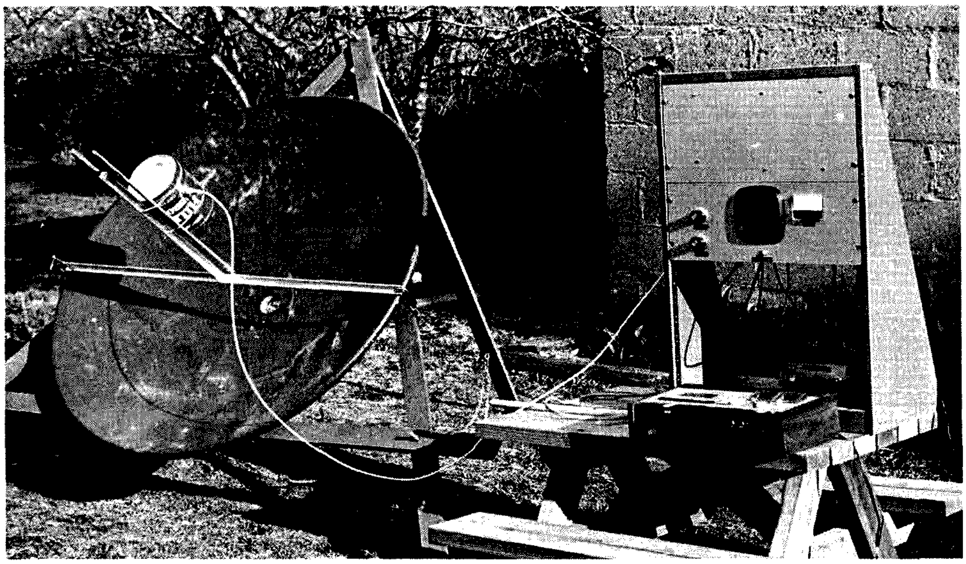

Fig. 6. The test configuration used to evaluate the Microcomm converter. The dish antenna is a 4-foot surplus parabola mounted in an adjustable A-frame assembly. While this mounting is not suited for rapid changes from one satellite to another, it works quite well for monitoring a single satellite — in this case, GOES E. The coffee-can feed horn is clearly visible. I have since painted the outside of the horn (a rash step undertaken before I realized what a status symbol I had with my three-pound coffee can). 10 feet of RG-142/U (line loss of 2.1 dB) connects the feed horn with the converter. The converter modules are mounted behind the upper rack panel, while the lower panel contains the i-f receiver described in a previous article.[4] The cassette tape deck and 12 V power supply are also shown. Despite the line losses and partial obstruction of the end of the feed horn by the aluminum mounting rails, the system delivers full-quieting signals from both GOES E and GOES W.

this seems like a minor matter, it becomes important if you realize that each of the two operational GOES satellites has 36 ten-minute transmissions each day — a total of 84 "dead carrier, no video" minutes a day! This can be overcome by using an NE-567 tone decoder chip set up for 2400 Hz detection. You can drive the chip with an SSTV limiter hooked up to the audio line or use the 567 to key up a 555 with a slight delay so the relay doesn't drop out with subcarrier amplitude variations. In this way, you will only record actual frame transmissions, thus saving those 84 minutes of dead tape.

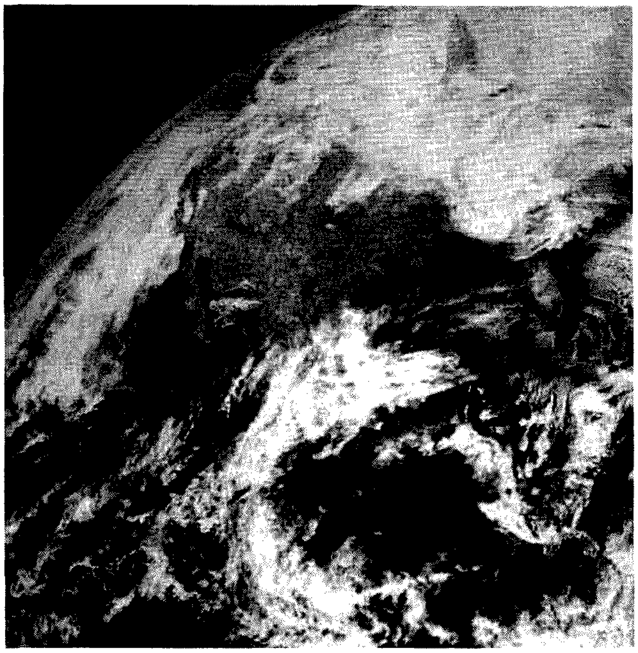

Fig. 7. A NW visible light quadrant transmitted by GOES E showing most of North America and Central America.

System Evaluation

The Microcomm converter was evaluated with the test setup shown in Fig. 6. The system employs 10 feet of RG-142/U between the horn and the first rf amplifier in the rack. The loss in this length of line is 2.1 dB with the probability of another dB loss due to the use of a BNC connector at the antenna end and then a BNC-to-type-N adapter to mate the line with the feed horn. The receiver noise level runs 1.5 microamps on the S-meter with no converter, rising to 3 microamps with the converter powered up. The receiver limits at 10 microamps and GOES signal levels have ranged between 11 and 15 microamps. Thus, considering that you have at least 2.5 to 3 dB of line loss prior to the first rf stage, it seems likely that you have at least the 3 dB system margin predicted by our link calculations. In addition to the line losses, there is an additional drop in signal strength due to the jury-rigged mounting system for the horn, obscuring a portion of the periphery of the horn with the aluminum mounting rails for the feed. The system will deliver noise-free copy despite these losses, as shown by the samples of GOES WEFAX imagery in Figs. 7-10.

Permanent Installation

Obviously, the system illustrated is not the operational installation. There are three reasons for this: (1) My wife wants that thing (my antenna) off the back lawn; (2) she also wants our daughter's picnic table back where it belongs; and (3) I cannot be hauling the rack in and out all year long. There are four main routes to a suitable permanent installation:

(1) Install the dish near the operating position, and run a short length of low-loss cable back to the installation.

(2) Site the antenna at any convenient location, mount two additional preamps (weatherproofed) on the horn, and run a low-loss line back to the converter.

(3) Mount the entire converter and i-f preamp in a weatherproof and temperature-controlled enclosure, and run the i-f signal back on low-loss line.

(4) Use a weatherproof and temperature-controlled enclosure at the antenna site, and use it to hold the entire receiving system.

The first option is probably not practical for most installations, and the second gets quite expensive if you tally up the costs for suitable transmission line and

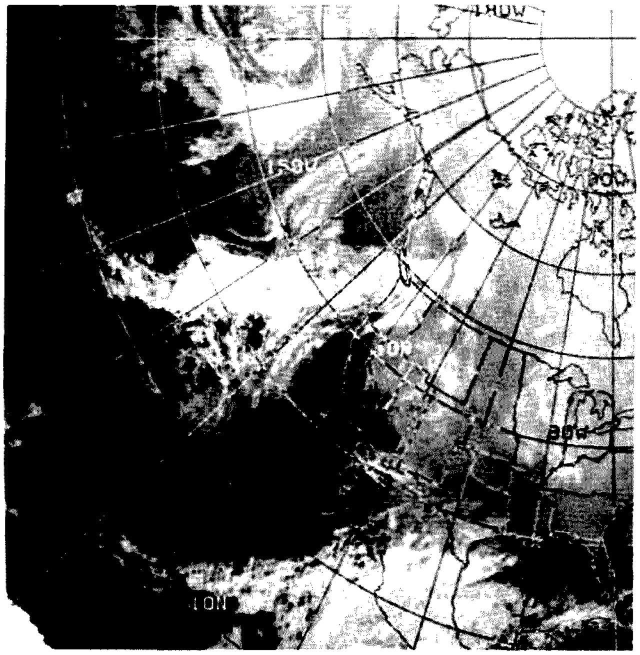

Fig. 9. One sector of a northern hemisphere polar mosaic prepared from NOAA 5 polar orbiting data and relayed through GOES E. This is night IR data and clearly shows the low ground temperatures over much of the U.S. during February when this picture was obtained.

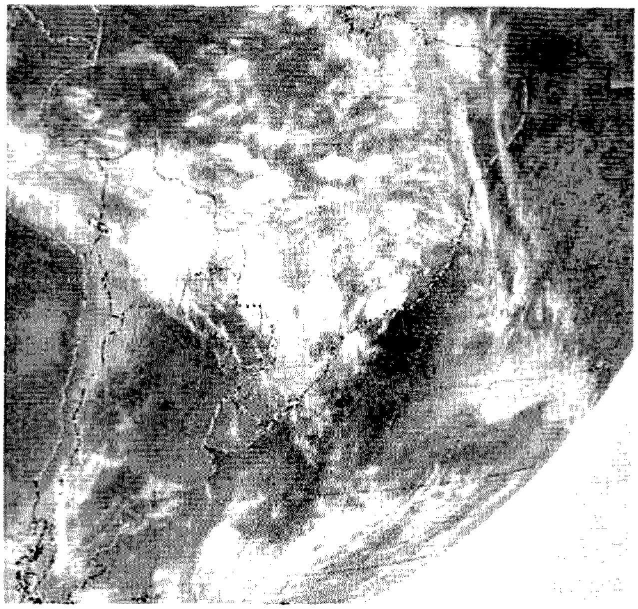

Fig. 8. A SE IR quadrant from GOES E showing most of South America. In the IR format, cold objects (space, high clouds) appear white with warmer objects appearing darker. The Andean uplands show noticeably whiter (cooler) than the lowlands. Low cloud cover over the Atlantic off the coast of Brazil is quite close to sea temperature and thus does not show strongly.

the added expense of one or two additional preamps to overcome the line losses. Three is a lot of bother, but, if you can pull it off, it is actually easier to go for #4, which is what I have done. Although the weatherproof enclosure route sounds complicated, it is easy to do. I simply placed the entire S-band converter and i-f receiver electronics in a Coleman ice chest. You can bring cables out the side of the box with plastic pipe fittings that are quite easy to seal up once the cables are installed. The box can be sealed easily and provides plenty of insulation. The box itself is shaded by the dish, and a short length of RG-8 foam cable connects the converter to the feed. A multiconductor cable carries unregulated dc (@18 V) out to the box, where it is regulated to 12 V by an IC chip, thus overcoming line voltage drop problems. Receiver audio is returned using two other conductors. The audio return is 500 Ohms balanced, achieved by using an 8-Ohm to 500-Ohm audio transformer in the box. The audio is converted back to 8 Ohms for the speaker in the control console. Speaker volume is controlled with an 8-Ohm pad. In relatively mild climates, this is all that should be required. Michigan, however, is far from mild in the climate department, so a thermostatically-controlled heater system was also installed in the box to handle low winter temperatures. The heater coil (25 W) from an aquarium heater was used, controlled by the thermostat for an egg incubator. The thermostat is set to hold the box temperature at 60° F., and experiments with the home freezer indicate that the small heater will have no difficulty handling the load at any conceivable low temperature likely to be encountered. Initially, everything was simply dumped into the box for feasibility testing, but, once the concept checked out, a frame was made out of 1/2" aluminum angle stock which holds everything together as a unit, should it ever be necessary to perform service work on the assembly.

GOES Imagery

The four principal types of imagery transmitted as part of the GOES WEFAX program are illustrated in Figs. 7-10. The material of greatest potential interest is

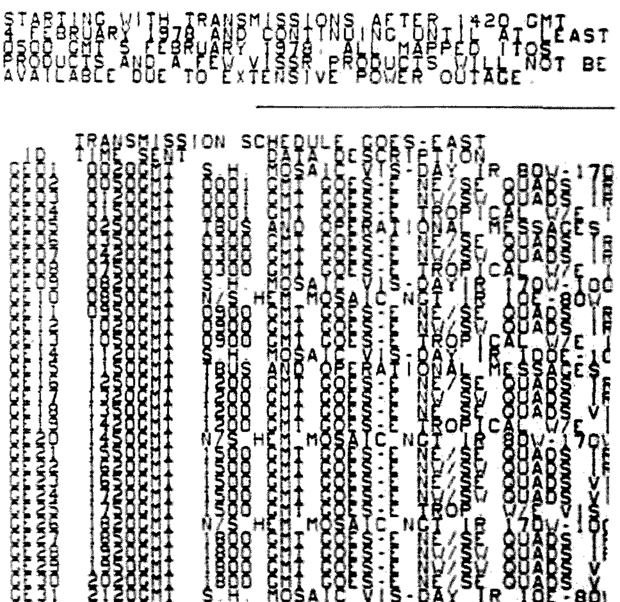

STARTING WITH TRANSMISSIONS AFTER 1420 GMT 4 FEBRUARY 1978 AND CONTINUING UNTIL AT LEAST 0500 GMT 5 FEBRUARY 1978 ALL MAPPED ITOS PRODUCTS AND A FEW VISSR PRODUCTS WILL NOT BE AVAILABLE DUE TO EXTENSIVE POWER OUTAGE.

TRANSMISSION SCHEDULE GOES-EAST

ID TIME SENT DATA DESCRIPTION

CE35 2350GMT 2100 GOES-E NW/SW QUADS VIS

Fig. 10. An example of an operational message transmitted through GOES E. In this case, we have the actual GOES E transmission schedule.

the visible light (Fig. 7) and IR (Fig. 8) imagery derived from the very high resolution infrared spin scan radiometer (VISSR) imaging system aboard the satellite. The GOES VISSR system produces very high resolution images of the full-Earth disc in both visible and IR radiation every 20 minutes. Direct reception of the VISSR images is impractical at the present time, due to the very wide bandwidths employed for transmission and the digital signal processing required to handle the pictures. The VISSR data are processed by the CDA ground stations, however, and sectorized images derived from VISSR data are then relayed through the satellite as part of the WEFAX program. The full-Earth disc is broken up into 4 quadrants for WEFAX transmission, as illustrated in Fig. 11. Additionally, two frames are also transmitted covering just the tropical portions of the disc. The examples shown in Figs. 7 and 8 are from GOES E and show portions of the Earth disc as seen by that satellite. Formatting is identical for GOES W, except that the pictures cover the view of the Earth as seen from that satellite's vantage point over the eastern Pacific.

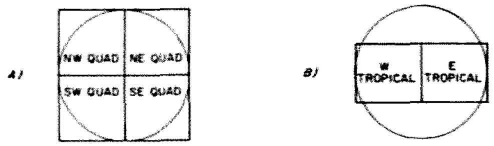

Fig. 11. Diagram of the sectoring procedure for WEFAX transmission of data derived from GOES VISSR operations. (a) shows the procedure for handling the full-Earth disc image involving the transmission of four quadrants. In addition, in order to provide full uninterrupted coverage of tropical latitudes, an eastern and western tropical segment is transmitted as shown in (b).

Time (GMT)	Data Description
0050	SH MOSAIC VIS-DAY IR 80W-170W
0120	0001 NE/SE IR
0150	0001 NW/SW IR
0220	0001 W/E TROPICAL
0250	TBUS AND OPERATIONAL MESSAGES
0350	0300 NE/SE IR
0420	0300 NW/SW IR
0750	0300 W/E TROPICAL
0820	SH MOSAIC VIS-DAY IR 170W-100E
0850	N/SH MOSAIC NGT IR 10E-80W
0950	0900 NE/SE IR
1020	0900 NW/SW IR
1050	0900 W/E TROPICAL
1120	SH MOSAIC VIS-DAY IR 100E-100W
1150	TBUS AND OPERATIONAL MESSAGES
1250	1200 NE/SE IR
1320	1200 NW/SW IR
1350	1200 NE/SE VIS
1420	1200 W/E IR
1450	N/SH MOSAIC NGT IR 80W-170W
1550	1500 NE/SE IR
1620	1500 NW/SW IR
1650	1500 NE/SE VIS
1720	1500 NW/SW VIS
1750	1500 W/E TROPICAL VIS
1820	1500 W/E TROPICAL IR
1850	1800 NE/SE IR
1920	1800 NW/SW IR
1950	1800 NE/SE VIS
2020	1800 NW/SW VIS
2120	1800 W/E TROPICAL VIS
2150	2100 NE/SE IR
2220	2100 NW/SW IR
2250	2100 NE/SE VIS
2320	SH MOSAIC VIS/DAY IR 10E-80W
2350	N/SH MOSAIC NGT IR 100E-100W

Fig. 12. A sample transmission schedule for GOES E. The data description column includes the time or acquisition of the VISSR full-Earth disc, the WEFAX quadrant (see Fig. 11 for an explanation of this), and whether the data represents visible (VIS) or infrared (IR) imagery.

Since geostationary satellite orbits must be located over the equator, the GOES satellites do not obtain a good perspective on the polar regions. To overcome this problem, gridded polar mosaics are assembled from NOAA polar orbiting satellite data and relayed through GOES as part of the WEFAX program. An example of one of the sectors from such a mosaic is shown in Fig. 9. Although the polar mosaics lack the beauty of the Earth disc imagery, they are extremely useful for forecasting because of the influence of the north and south polar regions on the world's weather systems.

Finally, various kinds of printed data, including the GOES operating schedules, operational announcements concerning tests and system status, and prediction data in support of polar orbiting operations, are also relayed as WEFAX imagery. Fig. 10 shows a typical transmission of this type. This is a far better way of keeping track of the GOES schedules than waiting for announcements from Washington. The latter have a tendency to arrive as much as several weeks after a schedule change! Although the schedules are changed on occasion, the GOES E schedule at the time of writing is included in Fig. 12 to give you some idea of the variety of data that is available.

Summary

The Microcomm system does provide a cost-effective way to get into the action on S-band. Several other companies are in the process of developing S-band converters and accessories. The coverage obtained by GOES E and GOES W makes WEFAX available to virtually all of North and South America, the Pacific Basin, much of the North and South Atlantic, westernmost Africa, and parts of the U.K. Stations outside of this area need not despair, for similar services will eventually be available to them. The European Space Organization plans to place a similar satellite over the equator on the Greenwich Meridian (the first attempt failed, but others will be forthcoming), Japan will be placing a satellite over the western Pacific, and the U.S.S.R. will be placing a satellite over the Indian Ocean. Operating frequencies will be similar to GOES, and the image format for these other satellites will be identical. When all five satellites are on station, there will be no point on the Earth's surface outside of the polar regions where GOES imagery is unavailable. I must admit that I was not pleased with the idea of having to make the conversion to S-band, but, now that it has been accomplished, I am quite enthusiastic. This is the natural part of the radio spectrum for effective space communications, and the reliability of the transmissions coupled with the quality of the pictures makes it a completely worthwhile project. ■

References

1. Nagle J., 1974, "A method of converting the SMS/GOES WEFAX frequency (1691 MHz) to the existing APT/WEFAX frequency (137 MHz)," NOAA Technical Memorandum NESS 54.
2. Taggart, R. E., WB8DQT, "Amateur Weather Satellite Reception," *73*, May, 1976, p. 52.
3. Taggart, R. E., WB8DQT, ***The Weather Satellite Handbook***, 73 Publications, Peterborough NH, 1976.
4. Taggart, R. E., WB8DQT, "Predict the Weather!", *73*, May, 1977, p. 48.

FCC

Reprinted from the Federal Register.

from page 190

Finally, the Commission often makes arrangements for the examination of the handicapped on an ad hoc basis. A deaf applicant, for example, might be administered a telegraphy examination using a flashing light, or might be permitted to place his or her fingers upon a pulsating oscillator to "feel" the text being sent. In each of the instances outlined above, however, the handicapped applicant is held to the same standard of competence as the non-handicapped applicant: the passing requirements are identical.

Regulatory Background

The United States is signatory to the Radio Regulations of the International Telecommunication Union (ITU). As such, the Commission is obliged to observe and implement those regulations. Article 41, section 3(1) of the ITU Radio Regulations states that:

> Any person operating the apparatus of an amateur station shall have proved that he is able to send correctly by hand and to receive correctly by ear, texts in Morse code signals. Administrations concerned may, however, waive this requirement in the case of stations making use exclusively of frequencies above 144 MHz.

Section 97.23 of the Commission's rules implements article 41, section 3(1) of the ITU Radio Regulations. Section 97.23 requires that an applicant for an amateur operator license successfully complete a telegraphy examination in accordance with the following schedule:

Operator Class and Speed Required

Novice—5 words per minute (wpm).
Technician—5 wpm.
General—13 wpm.
Advanced—13 wpm.
Amateur Extra—20 wpm.

The Problem

Although most persons can learn to receive telegraphy well enough to obtain amateur licenses, some persons simply cannot. Some persons can learn to receive telegraphy, but only at very slow speeds. Other persons can receive telegraphy but for one reason or another cannot commit what they hear to paper. The reasons for an inability to learn the international Morse code either at all or at the necessary speed stem from several sources. Applicants with severe physical disabilities, such as quadraplegia, may be able to understand the code but may not be able to meet the Commission's speed requirements. Other applicants allege specific learning disabilities which prevent acquisition of telegraphy skills.

The Commission receives several requests each month for special consideration on the telegraphy examination from persons unable to meet the Commission's telegraphy requirements. Such requests are occasionally submitted by those who probably could, if they were sufficiently diligent, learn telegraphy. Often, however, individuals requesting special consideration are severely handicapped and allege that because of their handicaps they are incapable of successfully completing the Commission's telegraphy examinations. Handicapped applicants unable to pass the Commission's telegraphy examinations frequently assert that the Commission should not refuse to issue them amateur operator licenses because handicaps over which they have no control prevent the acquisition of telegraphy skills.

Since the Commission is precluded by article 41, section 3(1) of the ITU radio regulations from waiving or eliminating the telegraphy requirement in its entirety (at least insofar as stations operating below 144 MHz are concerned), the questions to be addressed by both the Commission and those responding to this notice of inquiry are these:

> What is the proper Commission approach to the administration of amateur radio telegraphy examinations to the handicapped?
> How should the Commission respond to requests for relaxation of the telegraphy speed requirement submitted by handicapped applicants?
> Should the handicapped be held to less rigorous standards than the nonhandicapped? If so, should the handicapped receive the same operating privileges as the nonhandicapped?
> Is the Commission doing enough now to assist the handicapped demonstrate their telegraphy qualifications?

Decision Factors

To assist the public to channel its thinking about the administration of amateur telegraphy examinations to the handicapped, the Commission has developed a preliminary set of decision factors. The list of decision factors that follows is not exhaustive. Rather, it merely represents some of the major criteria the Commission believes the public should explicitly consider in evaluating the options (decision alternatives) for Commission action. If the Commission has overlooked any significant decision factor, the Commission urges the public to develop others. The Commission believes the objective evaluation of various decision alternatives in terms of a set of decision factors will result in sounder, more rational decisionmaking. We believes, further, that such decisionmaking will materially assist us in our continuing efforts to serve the public effectively.

1. Administrative/Resource Impact

This decision factor comprehends all costs to the Commission that would result from adoption of any of the decision alternatives. Although the public cannot be expected to comment knowledgeably or precisely about how much it would cost the Commission to pursue a particular course of action, the Commission asks those recommending one alternative over another to consider the potential administrative and budgetary impacts of the recommended alternative on the Commission. Cost will play a very important role in whatever action, if any, the Commission eventually takes toward the administration of amateur telegraphy examinations to the handicapped. In submitting comments, the public should be aware that the Commission will be able to adopt an expensive decision alternative only if the information developed concerning the other decision factors is strongly supportive.

2. Impact on the Amateur Radio Service

This decision factor concerns the objective impact of adoption of each of the decision alternatives on the amateur service and its licensees. For example, would adoption of a particular decision alternative result in a large increase in the population of the amateur service, a small increase or no increase at all? What would the effect be on spectrum use? Would the amateur frequency bands become perceptibly more crowded? Would the overall quality of the service, expressed in terms of operator qualifications and competence, decline or increase appreciably?

3. Impact on the Handicapped

Using this decision factor, the public should assess the impact of the adoption of each of the decision alternatives on the handicapped. For example, would adoption of a particular decision alternative result in fairer treatment for the handicapped? Would the

✓ Reader Service—see page 323.

number of handicapped applicants obtaining amateur licenses be greater, fewer, or the same? Would the Commission be meeting the needs of the handicapped more effectively?

4. PRACTICAL PROBLEMS

This decision factor includes miscellaneous information that might have an impact on the Commission's decisionmaking process. For example, three of the four decision alternatives discussed below require the Commission to define "handicapped." What sort of definition of "handicapped" should the Commission adopt, for purposes of amateur operator examinations, given the Commission's lack of medical expertise? Those submitting comments should outline any other factors relevant to a proper disposition of the matter at hand.

DECISION ALTERNATIVES

The Commission has identified several alternate approaches to the problem of the administration of telegraphy examinations to handciapped applicants for amateur radio operator licenses. The paragraphs that follow briefly discuss each of the major alternatives. Where necessary for complete understanding of the alternative, the Commission has included pertinent background information.

ALTERNATIVE 1: MAINTAIN THE STATUS QUO

As we outlined in the preceding paragraphs, the Commission currently makes many special arrangements to assist the handicapped demonstrate their telegraphy qualifications. We do not relax the telegraphy requirement, however. Thus, a handicapped applicant for a general class license, for example, must be able to demonstrate an ability to receive telegraphy at 13 wpm.

ALTERNATIVE 2: AMEND THE RULES TO REDUCE THE TELEGRAPHY SPEED REQUIREMENT FOR HANDICAPPED APPLICANTS.

The Commission's past experience has demonstrated that giving handicapped applicants for amateur operator licenses special consideration in the rules makes it possible for many handicapped persons who might not otherwise be able to pursue amateur radio as a hobby to do so. Occasionally, however, nonhandicapped persons have attempted to take advantage of the rules for the handicapped. We solicit comments on how we could draft new rules avoiding the problems we have encountered in the past.

ALTERNATIVE 3: AMEND THE RULES TO CREATE A NEW CLASS OF AMATEUR OPERATOR LICENSE WITHOUT A TELEGRAPHY REQUIREMENT AND RESTRICT ELIGIBILITY TO HANDICAPPED APPLICANTS.

The ITU radio regulations permit the Commission to create such a license class, as long as any stations licensed are restricted to operation above 144 MHz. (There is an open rulemaking proceeding, docket 20282, in which the Commission proposed a "codeless" license class, the Communicator class, having neither telegraphy requirements nor operating privileges below 144 MHz. The Communicator class would not have been restricted to the handicapped, however.)

ALTERNATIVE 4: WAIVE THE RULES TO PERMIT HANDICAPPED APPLICANTS TO DEMONSTRATE THEIR TELEGRAPHY QUALIFICATIONS AT SLOWER SPEEDS THEN NONHANDICAPPED APPLICANTS.

As we indicated above, the Commission does not grant waivers of the telegraphy speed requirement.[1] If the Commission were to begin waiving the telegraphy speed requirement for the

Continued on page 284

[1] The Chief, Safety and Special Radio Services Bureau is, of course, delegated authority to waive the regulation by section 0.331 of the rules.

Happiness is a DMM Kit

—Sabtronics makes a gem

John M. Blalock W7AAY
3054 West Evans Drive
Phoenix AZ 85023

I'm sure I wasn't the only one to wonder if Sabtronics'* full-page ads, in color no less, could be for real. However, being in need of a good digital multimeter and liking the specs as well as the price, I placed my order. This article will share with the reader what I received.

*Sabtronics International, Inc., PO Box 64683, Dallas TX 75206.

The Model 2000 is a compact integrated circuit digital multimeter. It has five ac or dc voltage ranges, 100 millivolts to 1000 volts, with 100% overrange capability (the 10-volt range, for example, allows measurement and display of up to 19.99 volts). Current ranges, rare on a DMM, are 10 microamps to 1 Amp (1.999 max.). Resistance ranges are from 100 Ohms to 10 megohms. It has 10-megohm input impedance on the voltage ranges and overload protection on all ranges.

All of these features are housed in an attractive blue high-impact plastic case which is only 8" wide x 6½" deep x 3" high and weighs just 2¼ pounds including four "C" batteries (not supplied). Accessories available from Sabtronics include test leads, an external dc power kit that requires 8½ to 15 V dc, an ac adapter, an ac true rms kit, and nicad batteries for use with the ac or dc external power adapters.

Like most inexpensive VOMs, VTVMs, and DMMs on ac, the Model 2000 is average sensing but displays rms values which are correctly calibrated only for sine wave signals. The $26.95 true rms kit makes this DMM true rms sensing up to 100 kHz. In my applications, I don't need this upgrade and no evaluation of it is included herein. The Model 2000 only draws 120 mA from its power source. Four alkaline C batteries will power it for about 25 hours, typically. I haven't tried the nicads and ac adapter yet, either. Twenty-five hours is a lot of measuring.

Other than the batteries, input jacks, and displays, all parts are mounted on one single-sided PC board. The FND359 displays are on a small 1" x 3½" board which is mounted behind the front panel. The display board connects through ribbon cable to the main 6½" x 4¼" board. This board contains the 9-push-button selector switch, seven integrated circuits, 58 resistors, 20 capacitors, 12 diodes, 4 transistors, and several other miscellaneous parts. The board comes solder-plated with a solder mask on the circuit side and component marking on the component side. All parts are of good commercial quality. Included on the board is a calibrated voltage reference IC and four premeasured resistors to be used for self-calibration. Sockets are provided for these parts so that the heat of soldering will not change their value. Sockets are not provided for the other ICs but are recommended.

Sabtronics' assembly and operation manual has obviously been influenced by Benton Harbor. While not in the same league with the Benton Harbor product, it doesn't fall far behind. The step-by-step instructions could only be improved by better pictorials. The excellent component marking on the PC board made up for the only fair pictorials. Total construction time including calibration took me less than six hours.

The solder mask was a big help in preventing solder bridges which would otherwise be hard to prevent on the tightly-packed board. My kit worked as soon as power was applied, attesting to the quality of the parts and ease of construction. The manual does contain enough theory of operation to help locate any problems that may occur.

The self-calibration capability of the Model 2000 is one of the most impressive features of the kit, in my opinion. There are eight variable resistors that must be set to calibrate all of the different ranges. This can be done without additional test equipment, using only the pre-calibrated parts and the instructions provided by Sabtronics.

After calibrating the DMM per the self-calibration instructions, I compared its readings with those of a recently calibrated Fluke 8100A DMM. The mean dc voltage difference was 0.07%, Ohms was 0.32%, and ac volts was 2.9%. No comparison was made on the current ranges since the expensive Fluke has no current ranges like my "cheap" Sabtronics 2000 does.

Sabtronics also provides complete calibration instructions for use with external equipment such as might be found in a calibration laboratory. They only guarantee their published accuracy if this calibration procedure is used. Following this procedure using the Fluke 8100A only reduced the difference in ac voltage readings. The dc volts and Ohms mean differences increased slightly. No wonder I think their self-calibration procedure is one of the best features!

The DMM went together easily due to the quality parts, boards, and instructions. It worked right off with no problems. I now have a very nice professional-quality digital multimeter which I obtained for only slightly more than $60. ■

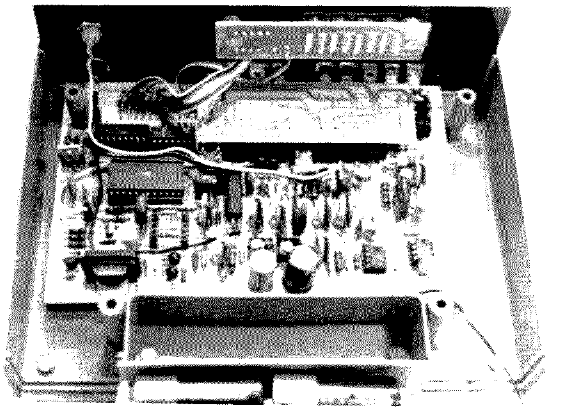

Inside the Model 2000.

Vintage Receiver Mods

—new life for hamfest bargains

Neil Johnson W2OLU
74 Pine Tree Lane
Tappan NY 10983

There are many serviceable older receivers around the ham scene. These are often available at prices much lower than new equipment of comparable quality. However, the typical ham often shies away from such offerings. Aside from i-f alignment (and possibly new electrolytics), the greatest problem seems to be tube replacements. If you take a look at a fairly recent parts catalog, some of the prices may startle you.

There are several different ways to cope with such a situation, especially in the less critical stages. Example: I keep an old SX25 receiver around—it has general coverage—and my first conversion was to replace the rectifier tube with two silicon diodes. Fig. 1 shows the circuit for this changeover. You can buy a kit from Meshna[1] for one dollar or make up your own. The kit contains an octal tube base—very convenient, no wiring change required. I've been using this setup for several years with no complaints. With respect to the audio section, the 6F6 output tubes can be replaced with others of like ilk, e.g., 6V6 or 6K6, or you might leave out one of the push-pull pair of tubes, with little or no effect on CW or SSB signals. I was lucky to have a few spares around, but when they go, I plan to disconnect the idle 5-volt winding from the rectifier socket and feed it into a cheap bridge rectifier and filter circuit. This ought to furnish more than enough power for a solid state audio module.

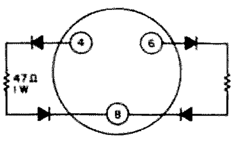

Fig. 1.

Tubes of the 6H6 or 6SQ7 type can be replaced, diode for diode, by the ubiquitous 914 or similar type solid state devices. But if you still insist upon hanging in with vacuum tubes, try types 6AL5 or 6AV6, both miniature types (7-prong sockets) electrically equivalent and much easier to come by than octal types. Type 6J5 in the bfo stage can be replaced by a 6C4 miniature, or, for the ultimate in economy, try the 1626 from the Command rigs. They work okay at 6.3 volts, but they take a little longer to heat up and should last forever.

In the more critical i-f and rf sections, I substituted 717A tubes for the 6SK7s. Essentially a 6AK5 with octal base, they cost only 25¢ at G & G,[2] so I purchased ten, just to be on the safe side. I took a look at the 6K8 converter tube and decided to leave it as is, mainly because of the rat's nest I found under the socket.

If the foregoing has not convinced you of the possibility of certain easy modifications, and you still want to re-tube all the way, there are several sources for economy-minded purchasers. In addition to the aforementioned G & G, you might do well to try Fair Radio.[3] In the most recent catalog, they had well over 400 different types of tubes available, all at fairly low prices. ■

References

1. Meshna, Box 62, East Lynn MA 01904
2. G & G Radio Supply Co., 45 Warren Street, New York NY 10007
3. Fair Radio Sales, 1016 East Eureka Street, Lima OH 45802

Dave Beckwith WB9SEQ
Rt. 1, Box 608
Plainfield IN 46168

Deep, Dark Secrets of the TR-7500

—exposing hidden talents

Kenwood's TR-7500 is the kid brother of the more generalized TR-7400A synthesized 2 meter rig. The 44 pre-programmed frequencies of the 7500 cover most of the common repeater splits and simplex frequencies. The 15 kHz up-shift gives access to the "in-between" channels which are coming into use in some areas. So the 7500 is a fairly friendly rig as long as you are in agreement with the Kenwood engineers on how a "normal" person will want to use it. And even if you get an occasional urge to do something "perverted," like using a repeater pair not sanctioned by the ARRL, the 7500 gives you six programmable channels to indulge your whims.

So we have here a rig which includes enough goodies to justify some interest, especially among these of us who don't have enough coordination to twiddle all the knobs on a full-blown synthesizer while mobiling in rush-hour traffic. I decided the TR-7500 was well suited to my normal operation and that those occasional desires for extras were only brought on by an overdose of glossy full-color ads in *73*.

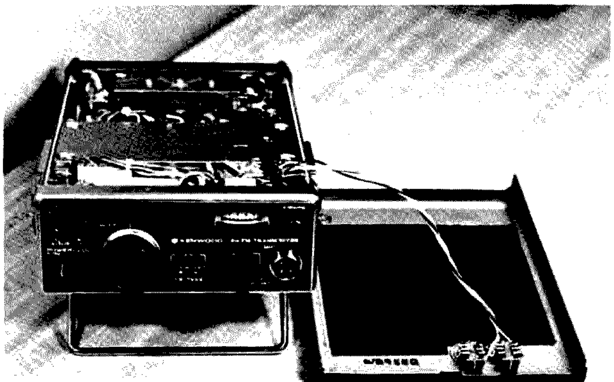

After getting over the initial "high" of using a new rig, I began looking into the schematics to see how the rig worked. I was interested to see if I could bring out the digital synthesizer inputs to allow the use of thumbwheel switches to enter a frequency. This is indeed possible, but the inputs are 8 bits of straight binary (15 kHz per step) which don't lend themselves to direct frequency readout on BCD thumbwheel switches. However, in the process, I stumbled across an unbelievably simple modification which gives nearly the same general frequency coverage, plus the ability to go "upside down" with just the flick of a switch!

The TR-7500 generates its "center" frequency and plus or minus 600 kHz offsets by diode switching one of three crystals into an oscillator. The final frequency is obtained by adding the synthesizer output to this base frequency. The three signals (X1, X2, X3) which control the selection of the proper crystal are inductively decoupled and filtered to make them true digital signals. These three inputs to the synthesizer board, along with two digital outputs which specify the transmit/ receive mode of the transceiver (TS, RS), are described in Table 1. Also, Fig. 1 shows the use of these signals and the "TX Offset" switch in the unmodified TR-7500. This "normal" configuration provides simplex or a plus or minus 600 kHz offset for any of the "center" frequencies available.

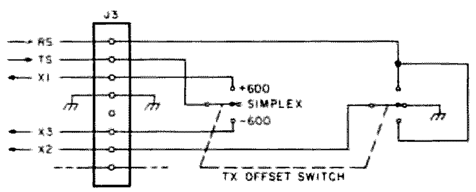

Fig. 1. Offset select circuit of unmodified TR-7500.

Signal	Function When True*
X1	Select crystal for +600 kHz offset
X2	Select crystal for center frequency
X3	Select crystal for −600 kHz offset
RS	Transceiver is in RECEIVE mode
TS	Transceiver is in TRANSMIT mode

*(True = zero volts, false = +9 volts or floating)

Table 1. Digital signals controlling frequency offset.

The schematic in Fig. 2 shows the modification in a dashed box. It consists of inserting two DPDT switches in the RS and TS signal lines. Actually, a 2-pole, 3-position switch would be more suitable, but I was unable to find one small enough to fit in the available space inside the case. I found that a pair of miniature slide switches (Radio Shack 275-327) with the lugs bent out to the sides fit nicely in a space just above the main frequency selector switch. A piece of card stock or mylar may be necessary to prevent contact between the components. The RS and TS signals are available at connector J3 on the top side behind the meter. The two signal wires are cut and the four ends spliced to an eight-inch pigtail coming from the switches mounted on the top cover. The pigtail also contains a ground wire which runs from switch S1A to the frame of the rig. After finding the right size switches, the entire modification took less than two hours to install.

When S1 and S2 are in the off (normal) position, or the "TX Offset" switch is set for simplex, everything functions just as Kenwood intended. Switching S1 on forces the rig into simplex at the selected offset frequency. On a repeater, this is equivalent to receiving direct while still transmitting through the machine. With S1 off and S2 on, the transmit and receive frequencies are swapped to go completely upside down. The effects of various switch combinations are shown in Table 2.

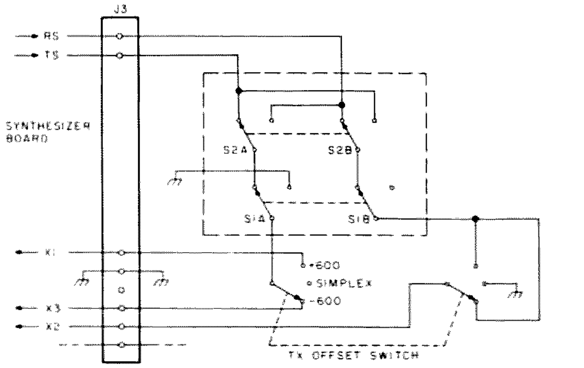

Fig. 2. Offset select circuit with modification in dashed box.

The simplicity of this capability might well be envied by owners of many generalized synthesizers. ■

S1	S2	Recv. Freq.	Xmit Freq.	Operating Mode
Off	Off	Center	Offset	Normal
On	Off	Offset	Offset	Simplex at offset freq.
On	On	Offset	Offset	Same as above
Off	On	Offset	Center	Upside down

Where: "Center" is the displayed frequency
"Offset" is the displayed frequency plus or minus the offset selected by the "TX Offset" switch

Table 2. Effect of switch settings on operating mode.

✓ Reader Service—see page 323

The TTY Lifesaver

—saves money, too

Ralph R. Sergo
1306 Harris, Apt. 83
Killeen TX 76541

The mean time between failures of a teletypewriter terminal can be extended by the circuit that turns on the motor only when information is being received or transmitted. In that way, the mechanical wear and destructive temperatures are minimized in a motor that is continuously powered up but seldom active. However, the power to the terminal consumes about $50 worth of electricity a year. If it is only active 10% of the time, this circuit could save $45 each year for each machine.

A logic circuit for this application is shown in Fig. 1. Circuit operation is as follows: When no characters are being transmitted over the current loop, the MCT2 optoisolator keeps the trigger input of the 74121 monostable multivibrator at logic "0". If characters are sent to the teletypewriter, or if the teletypewriter break key is depressed, the current loop is broken, and the line 74121 is triggered. This triggering fires the 555 timer, activating relay "K" through the Darlington pair (Q1 and Q2), thereby turning on the motor of the teletypewriter. The time the motor remains energized, "T", is given by the expression (R5 + R6) C4, where C4 is expressed in microfarads and R5 and R6 in megohms. Resistor R6 adjusts the time period between 2.5 seconds and 20 minutes. If another character is received or the keyboard is used during the time that the motor is energized, the monostable resets and the timer then retriggers it, keeping the teletypewriter on for another time period "T". To discharge C4 completely during the reset process, R4 and C3 should be greater than 2.4 × C4, where R4 is in kilohms and C3 and C4 are in microfarads. D3 and R7 and C6 prevent the relay from turning off during the 0.3 second reset operation.

Standard current loops

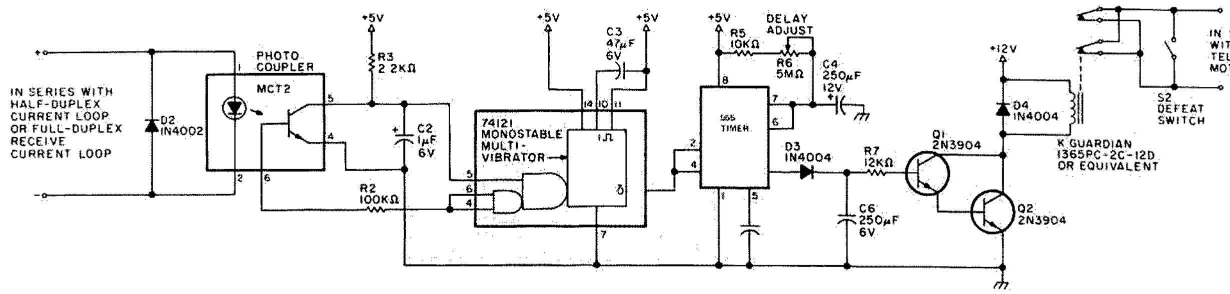

Fig. 1.

of 20 mA and 60 mA can be used. Diode 2 (D2) protects against accidental reversal of line polarity, and C2 provides immunity from noise on the line. Defeat switch "S" permits normal use of the teletypewriter terminal. The schematic of the power supply incorporates the transformer within the teletypewriter. This entire circuit can be built on a 3" x 3½" printed circuit board and installed. Total parts cost is about $20, and the unit pays for itself in just a few months. With the device installed, the power switch is left in the "on" position. The system software should be changed to send nonprinting characters to the operating teletypewriter 1 second before actual information output so that the motor can come up to operating speed. In a half-duplex system, hitting the break key starts up the teletypewriter locally. For this feature to work in a full-duplex system, the software must echo the break to the machine. Turn-off time delay can be changed as desired to avoid needless turn-on/turn-off cycles.

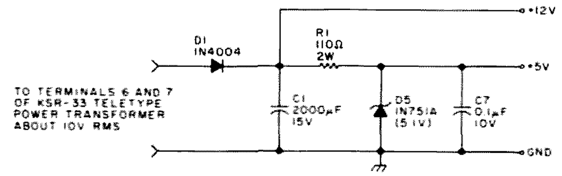

Fig. 2.

DX

from page 46

Committee that would require cards submitted for single-mode DXCC to show that the applicant both transmitted and received in the required mode. The result is that it is possible to earn a CW DXCC without making any CW-to-CW contacts. Just work them on SSB and get a quick report on your CW. This award Is now recognized as the ARRL Half A— -- DXCC.

With the assistance of the YL SSB net at 14332, the FCC recently shut down the operation of W6GSM/mm aboard the sailing vessel *Summer Breeze*. It seems that Mr. Timothy J. Wenger had read about the use of amateur radio in a yachting magazine and found communications on the amateur frequencies to be more reliable. When confronted by the FCC, Mr. Wenger stated that he was never advised when he bought the equipment that a license was required for transmission. In view of Mr. Wenger's cooperative attitude, no recommendation toward criminal prosecution was made.

The August 8th issue of *TIME* magazine carried a very informative article about lobbying in Washington and what it takes to get legislation moving or government regulations affected. Write your ARRL Director about the need for League representation in Washington. The ban on ten meter amplifiers could have been stopped with effective lobbying.

Speaking of the ten meter amplifier ban, it seems that the responsible manufacturers of amateur radio amplifiers were the only ones who halted ten meter amplifier production. The manufacturers of illegal CB linears simply changed from amplifiers to crystal-controlled, broadband amateur transmitters requiring four Watts drive. CBers simply use their CB transceivers as drivers instead of crystals. The result? Law-abiding amateurs lose their ten meter amplifiers while CBers continue to run illegal high-power amplifiers. The ARRL recently passed a resolution to notify the FCC of this practice.

I2FGP made some 1400 QSOs during his recent 6O1FG stay. License documents have been forwarded to the DXCC desk for approval.

The YI1BDG staff ordered a copy of the Bill Orr W6SAI *Antenna Handbook* in an attempt to beef up the signal.

IRCs can generally be purchased at a considerable savings from some of the more active QSL managers like W3HNK or WA3HUP. Drop them a line with an SASE and inquire.

The long, drawn-out (read expensive) antenna tower case of N6QQ is still in the courts. The outcome of this case could very well set a legal precedent that will affect us all. Donations to help fight this suit are badly needed and can be forwarded via the Southern California DX Club, 28403 Covecrest Drive, Rancho Verdes CA 90274.

The FT-560 forwarded to YI1BDG by the Northern California DX Club has apparently been refused.

All Clipperton cards should be out by the time you read this. If yours is among the missing, try again to HB9MX. All other routes are closed.

The great days of DXing are upon us once again. Two years ago the smoothed sunspot number bottomed out at 12.2. The smoothed sunspot number is now pushing 120 and the flux is running around 140. Remember when the pessimists were predicting that cycle 21 would never break 100?

In the October column, we mentioned that amateur radio license renewals were averaging better than 17,000 a month. Late word out of Gettysburg puts the figure at closer to 29,000 per month. If you ever wanted to make a few bucks in the amateur radio market, now is the time. Write Wayne for 73's advertising rates.

Geoff Watts, 62 Belmore Road, Norwich NR7 OPU, England, is publishing a Radio Amateur Prefix and Country/Zone List that is almost indispensable for the serious DXer. Geoff will part with a copy for only $1.00 American or 5 IRCs. If you live in the United Kingdom or understand the British monetary system, then its only 40p.

If you hear a strange prefix and you are not sure of its origin, just look it up on the ITU callsign chart on the back of your ARRL logbook. If you don't use an ARRL logbook, then try the *Handbook*.

Congratulations to the new officers of the San Diego DX Club: President Glenn Rattman K6NA; Vice President Rick Craig N6ND; Secretary/Treasurer Al Gordon N6ZI.

The recent HZ1BS/8Z4 was royally operated by Prince Abdullah and Sheik Ahmed.

Seems that some of the 3.8 MHz contacts for the Clipperton operation never got transferred from the original logs. If you received a "not in log" note on your QSL, you might try resubmitting it.

If you have not yet joined the Northern California DX Foundation, you should consider doing so. Many of the recent major DXpeditions have been at least partly funded by this organization. These include the K5YY African swing, Desecheo, Clipperton, 4U1UN, and many others. The Northern California DX Foundation is totally nonprofit and you can receive more information by writing to Box 717, Oakland CA 94604.

ARRL growth continues, but not at the fantastic rate of last year. July membership was 167,000 with predictions of 180,000 by 1980.

According to HL9WI, some 700 Koreans recently passed the new amateur examinations.

JL prefixes are beginning to show from Japan. They are getting close to their ITU allocation which ends at JSZ.

A group of Arizona Gotrocks are negotiating to purchase Ambergris Cay in the Turks and Caicos Islands and set up their own government. They plan to issue passports, register corporations, and issue their own stamps and currency. This should convince the doubters that there will always be new ones to work. The offered price, by the way, is 50 million dollars. Expensive even for beachfront.

The Canadian Amateur Radio Federation News Service recently issued a notice to the effect that in addition to the CF for VE and CY for VO prefixes, DOC Canada had authorized the use of CF8 for VY1 in the Yukon Territory. These special prefixes may be used by Armed Forces Personnel either active, reserve, or retired to commemorate 75 years of Canadian Armed Forces communications.

Also on the Canadian front, the Canadian Interdepartmental Committee on WARC '79 has released a supplement to the second draft Canadian position proposals, issued last April. Good news is that the proposal to change the ITU Article 41, which would have permitted "no-code" amateur licenses, has been deleted. Bad news is that the proposal to remove 420-430 MHz and 3.8-4.0 MHz from the amateur service still stands. Amateur comments on an international pro-

Continued on page 224

Lauren A. Colby
15 N. Court St.
Frederick MD 21701

Build the "Version Three"

—simple RTTY TU does it all

This article describes a RTTY TU designed specifically to drive electronic printers and video displays, including such devices as Baudot/ASCII converters. The TU features the following:

- Extremely good performance on weak and noisy signals.
- No external or internal power supply needed—all power is derived from the receiver audio and the local loop.
- Low-voltage local loop (as little as 8 volts and no more than 12). No high voltage to fry delicate TTL components or the owner thereof.
- High immunity to drift and mistuning.

In the design of TUs to drive mechanical teleprinters, there are numerous constrictions which do not apply to a TU which is to be used with a Baudot/ASCII converter and TV typewriter. The mechanical printer must be driven with high voltage for good waveform. A solid state device requires no such high voltage. Mechanical printers cannot tolerate much telegraph distortion; solid state devices usually can tolerate quite a bit. Mechanical printers require good, clean square waves for proper operation. Solid state displays generally contain all kinds of internal devices which clean up any waveform problems.

The design philosophy behind TUs which drive mechanical printers is generally to create a big electronic toggle switch. The theory of such designs is that strong, clean pulses will flip the switch, while noise and QSB will not.

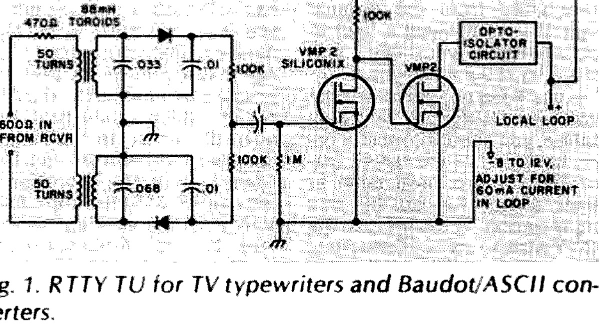

Fig. 1. RTTY TU for TV typewriters and Baudot/ASCII converters.

That theory is fine, but a price must be paid for such a design, and that price is poor performance on weak signals (because weak signals won't flip the switch). I have owned more than a dozen such TUs over the years, both home brew and military surplus, and none would make good copy on signals which drove the S-meter on my surplus Collins tank receiver to less than about the 20-dB mark. The TU to be described here *will* make good copy on signals which fall well below the 20-dB mark. In fact, when used with Jeff Roloff's Baudot/ASCII converter and TV typewriter ("ASCII/Baudot Converter for Your TVT," Jeff Roloff, *73*, November, 1976), the TU will make legible copy on signals which won't even budge the meter.

Theory of Operation

Referring to the circuit diagram (Fig. 1), we see that two 88-mH toroids have been made into transformers by winding 50 turns of wire onto them, to serve as primaries (hint: don't try to count 50 turns; just wind 100 inches on each toroid). The 470-Ohm resistor in the input is just a precaution to prevent damage to the tuned circuits and diodes in case somebody accidentally turns up the receiver volume to full blast; you may or may not need it with your receiver.

The .033 and .068 µF tuning capacitors must be paper or mylar, and preferably should be rated at 200 volts or better. Also, the coupling capacitor (.1 µF) should be paper or mylar. With the values of tuning capacitors shown, the higher tone (mark) will be 2975 Hz, and the lower tone (space) will be 2125 Hz, providing for a shift of 850 cycles. For 425 cycle shift, add .015 µF to the .033 µF capacitor. For 170 cycle shift, add an additional capacitance of about .007 µF. Actually, because the TU is capacity coupled, tuning is very uncritical, and you will find that you can copy 170 cycle shift easily with the tuned circuits set for 425 cycle shift just by straddling the signal. For very best weak signal performance, however, the circuits should be tuned exactly.

The tuned circuits drive diodes connected in a conventional double-tuned discriminator configuration. The discriminator drives a pair of Siliconix high-power MOS field-effect transistors. In the first two versions of this TU, I used only one FET in the output. This gives very good performance on

taped RTTY, but is not satisfactory for reception of keyboard sending because the FET is normally off, so that during long pauses in keyboard transmissions the loop current will drop to zero, simulating a space, and the video display will print an error. By using two FETs, the circuit is normally on, and the pulses arriving from the 0.1 μF coupling capacitor drive the local loop off.

My local loop consists of a variable bench supply, zero to 12 volts, adjusted for 60 mA loop current. You may wish to use a fixed supply, with an adjustment pot in series therewith. For a 12-volt supply, a 200-Ohm, 1-Watt carbon control should make an adequate pot. The optoisolator circuit is part of the Roloff Baudot/ASCII display which I'm using. Most other solid state displays are similar arrangements.

Construction and Availability of Parts

I constructed my unit on a piece of Radio Shack perfboard, the kind that plugs into a 22-pin edge connector. The toroids are bolted to the board with rubber faucet washers and nylon nuts and bolts (available from Radio Shack—the nylon nuts and bolts, I mean, not the faucet washers). Wiring is ordinary "rat's nest."

88-mH toroids can be purchased at SASCO Electronics, King Street, Alexandria, Virginia. They are not a regular mail-order house, but if you call them on the phone, you can probably get them to ship you a couple. The power FETs are available from Tri-Tek, Inc., 6522 North 43 Ave., Glendale, Arizona 85301. They are $6.95 each, plus 40 cents extra for the specs (which you will need in order to figure out the lead configurations). This company makes very prompt shipment, so that if you send in your order on Monday, you'll probably have the FETs by the following weekend. Specify that you want the type "VMP-2" FET. The tuning capacitors may present a problem. Try local TV jobbers. If that fails, you'll just have to scrounge around in the surplus stores.

Operation

Tuning of the TU may be monitored with a scope or you may insert an LED in the local loop to monitor the on and off pulses. On strong signals, the TU will make perfect copy, regardless of the setting of the receiver audio controls. However, when you are digging down in the noise for weak signals, which is the main function of this unit, careful setting of the receiver audio will pay off. If the receiver has a noise limiter, you will usually find that you get better results with it turned off. On a weak and fading signal, set the receiver AVC to on and adjust the volume to the point where the display just begins to print. Then advance the control just a hair.

In connecting this unit to certain types of solid state equipment, such as a Frederick Electronics code converter, you may find that the equipment "locks up" and fails to print. This effect is caused by audio leaking through the circuits of the "Version III" and getting into the circuitry of the equipment which is being driven. The cure for this is to connect a 35 μF capacitor directly across the printer output terminals of the "Version III." Don't use this capacitor if you do not need it; it will slightly degrade the weak signal performance. ■

✓ Reader Service—see page 323.

Warren MacDowell W2AOO
939 Lake Street
Angola NY 14006

Heath's GR-88 Gets Religion!

—convert it to 2 meters

It appears that, due to the increase in popularity of "scanning" type VHF receivers, the Heathkit® GR-88 tunable receiver has become available at modest sale prices. The GR-88 is a completely solid state receiver that tunes from about 152 to 174 MHz and has provisions for one crystal-controlled channel. With the self-contained battery pack, it is completely portable. Full squelch circuitry is also a fine feature of this receiver. It doesn't have a 30-pole crystal filter for the ultimate in selectivity, but the 10.7 MHz i-f is quite good for a general-purpose monitor receiver.

The front end or tuner portion of the GR-88 is factory assembled and prealigned. The 10.7 MHz i-f, squelch, and audio board must be constructed as a typical Heathkit. The 10.7 MHz i-f transformers have also been factory aligned for ease in the final tune-up procedures.

Although the GR-88 has a factory prealigned front end, it can be quite easily retuned to cover 142-160 MHz with no additional components. This 142-160 MHz frequency span allows reception of MARS channels below and above two meters and most of the public service frequencies above two meters.

The GR-88 can be realigned for two meters with a minimal amount of test gear. All that is necessary is a simple grid-dip meter or signal generator that covers two meters and below. The plastic alignment tools provided by Heath in the original kit are adequate for tune-up. Do not use metal tune-up tools as their resultant capacity can make alignment pretty tough.

Fig. 1 illustrates the positions of the coils and capacitors that will have to be adjusted during alignment. The first step is to couple the test generator to the GR-88 receiver. Of course, if you are fortunate enough to have a signal generator, it can be coupled directly to the antenna input. If you are using a grid-dip meter, a small piece of hookup wire inserted in the GR-88 antenna jack will couple the signal into the receiver.

The main tuning dial of the receiver should be set at 152 MHz or its lowest frequency setting. The dial should remain in this position during the entire tune-up procedure. With power on and the squelch off, adjust your signal source until this frequency (about 152 MHz) is detected by the receiver.

C112 is the metal screw (older models) or ceramic capacitor (newer models) that trims the frequency of the oscillator stage. C112 should be tuned in small increments and the received signal followed *down* the band with your signal source. You will eventually reach a point where this trimmer (C112) will no longer cause a decrease in frequency. With the screw-type trimmer, it probably will be all the way in. Leave the trimmer at this setting. L102 is now tuned clockwise until you detect a frequency of 142 MHz.

We must mention at this point that T102 (10.7 MHz mixer coil) should not be adjusted at any time during the realignment.

The rf amplifier and mixer stages are next in the alignment procedure. With the same signal source at 142 MHz, adjust both C102 and C109 fully clockwise to increase their capacity. T101 and L101 are now adjusted clockwise for a maximum increase in signal strength.

If you are using a grid dipper as the signal source, back it as far away from the receiver as possible and retune T101 and L101 for maximum signal. C102 and C109 can also be adjusted for maximum.

When you can no longer detect an increase in signal from the test source, attach your two meter antenna and tune around a bit. At this point, some two meter activity should be detected. Select a weak station and once again adjust T101, L101, C102, and C109 for maximum. This completes the front end

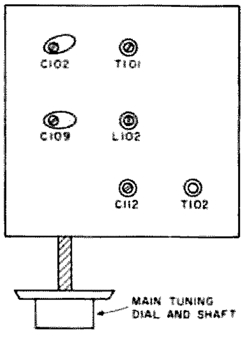

Fig. 1. GR-88 tuner, top view.

alignment. If you so desire, the 10.7 MHz i-fs may also be tweaked up a bit. With a weak two meter station, carefully adjust T1, T2, T3, and T4 for optimum signal and clarity of FM reception.

Although we have not tried crystal-controlled operation on two meters with the GR-88, it should be entirely possible. For a frequency of 146.000 MHz, the crystal frequency would be determined as follows: 146.000 (desired receive frequency) − 10.700 (i-f frequency) = 135.300 (oscillator output frequency). 135.300 (oscillator output frequency) ÷ 3 = 45.100 (crystal frequency).

Therefore the crystal frequency would be 45.100 MHz.

When ordering a crystal for a specific frequency, it should be of the following type:
Holder: HC-18/U
Load capacitance: 32 pF
Mode: Parallel resonance on the third mechanical mode of oscillation
Frequency tolerance: .0025% at 25 degrees C.
Maximum drive level: 1.2 mW
Effective resistance: 25 Ohms

C44 will have to be retuned for a resonance of L3 at 135.300 MHz for reception at 146.000 MHz. It is possible that a small amount of capacitance may have to be added to C44 (in parallel with). Use a high-quality silver mica for this application should it be necessary.

Upon completion of this conversion, the GR-88 serves well as a general-purpose receiver for both two meters and the additional frequencies up to 162 MHz. ■

DX

from page 217

posal to reserve 10 kHz in each amateur band for worldwide communications during natural disasters have been invited. Last-chance comments closed on August 31, after which the CIC will prepare the Canadian position for WARC '79.

QSL INFORMATION

A2CED to K4EBY
A51PN to H.N. Pradhan, Amateur Radio Station, Post Office, Thimpu, Bhutan
D68AF to K5YY
FG7TD to W5RU
FR7BV to Michael Di Orio, LEP, Route Des Makes, 97450 Saint Louis, Reunion Island
GU5CIA/GU4EON/GU3YIZ to K5YY to PO Box 5299, Little Rock AR 72215
KA1IW to K8DYZ
KM6BI to W5RU
Box 100, Guernsey, Channel Islands, UK
H44CD to W4BAA
HF0POL to SP2BBD
HZ1BS/8Z4 to PO Box 31, Gratz, Austria
Northern California DX Foundation—see text
PJ8USA to W1CDC
S8ABC to Box 900, Secunda, 2302 Republic of South Africa
ST0RK—see text
SV0WY to S/Sgt Mike Woolverton, PO Box 3078, 7122 Broadcasting Sqdn, APO NY 09223
SV0WTT to Box 722, APO NY 09223
SV1JG—see text
TA1ZB to Metin Kutlu, Box 188, Istanbul, Turkey
VE1MTA—see text
VR3AH to WB4PRU
4AAFR to Box 642, Saltillo, Mexico
4U1UN—see text

Many thanks to the *West Coast DX Bulletin* and the *Long Island DX Assn. Bulletin* for much of the preceding information.

OSCAR Orbits

The listed data tells you the time and place that OSCAR 7 and OSCAR 8 cross the equator in an ascending orbit for the first time each day. To calculate successive OSCAR 7 orbits, make a list of the first orbit number and the next twelve orbits for that day. List the time of the first orbit. Each successive orbit is 115 minutes later (two hours less five minutes). The chart gives the longitude of the day's first ascending (northbound) equatorial crossing. Add 29° for each succeeding orbit. When OSCAR is ascending on the other side of the world from you, it will descend over you. To find the equatorial descending longitude, subtract 166° from the ascending longitude. To find the time OSCAR 7 passes the North Pole, add 29 minutes to the time it passes the equator. You should be able to hear OSCAR 7 when it is within 45 degrees of you. The easiest way to determine if OSCAR is above the horizon (and thus within range) at your location is to take a globe and draw a circle with a radius of 2450 miles (4000 kilometers) from your QTH. If OSCAR passes above that circle, you should be able to hear it. If it passes right overhead, you should hear it for about 24 minutes total. OSCAR 7 will pass an imaginary line drawn from San Francisco to Norfolk about 12 minutes after passing the equator. Add about a minute for each 200 miles that you live north of this line. If OSCAR passes 15° east or west of you, add another minute; at 30°, three minutes; at 45°, ten minutes. Mode A: 145.85-.95 MHz uplink, 29.4-29.5 MHz downlink, beacon at 29.502 MHz. Mode B: 432.125-.175 MHz uplink, 145.975-.925 MHz downlink, beacon at 145.972 MHz.

OSCAR 8 calculations are similar to those for OSCAR 7, with some important exceptions. Instead of making 13 orbits each day, OSCAR 8 makes 14 orbits during each 24-hour period. The orbital period of OSCAR 8 is therefore somewhat shorter: 103 minutes.

To calculate successive OSCAR 8 orbits, make a list of the first orbit number (from the OSCAR 8 chart) and the next thirteen orbits for that day. List the time of the first orbit. Each successive orbit is then 103 minutes later. Due to incorrect tracking information obtained during the early days of OSCAR 8, the equator crossing times contained in most published charts are in error. To correct this error, multiply the orbit number by 0.00205 minutes and add the result to the equator crossing time as printed in the chart. For example, the published time for orbit number 3352, the first equatorial crossing on November 1, 1978, is 0018:50 UTC. Thus, for orbit number 3352, the corrected equatorial crossing time would be:

$$\begin{aligned}\text{Corrected time} &= 0018{:}50 + (3352 \times 0.00205 \text{ minutes}) \\ &= 0018{:}50 + (6.8716 \text{ minutes}) \\ &= 0025{:}42.3\end{aligned}$$

The longitude figures contained in the OSCAR 8 chart are virtually unaffected by this tracking error. The chart gives the longitude of the day's first ascending equatorial crossing. Add 26° for each succeeding orbit. To find the time OSCAR 8 passes the North Pole, add 26 minutes to the time it crosses the equator. OSCAR 8 will cross the imaginary San Francisco-to-Norfolk line about 11 minutes after crossing the equator. Mode A: 145.85-.95 MHz uplink, 29.4-29.50 MHz downlink, beacon at 29.40 MHz. Mode J: 145.90-146.00 MHz uplink, 435.20-435.10 MHz downlink, beacon at 435.090 MHz.

Oscar 7 Orbital Information

Orbit	Date (Nov)	Time (GMT)	Longitude of Eq. Crossing °W
18120 Bbn	1	0144:47	86.1
18132 Abn	2	0044:08	71.0
18145 Bbn	3	0138:25	84.6
18157 Bbn	4	0037:45	69.4
18170 Abn	5	0132:03	83.0
18182 Bbn	6	0031:23	67.9
18195 Bbn	7	0125:41	81.4
18207 Abn	8	0025:01	66.3
18220 Bbn	9	0119:18	79.9
18232 Bbn	10	0018:39	64.7
18245 Abn	11	0112:56	78.3
18257 Bbn	12	0012:17	63.2
18270 Bbn	13	0106:34	76.8
18282 Abn	14	0005:55	61.6
18295 Bbn	15	0100:12	75.2
18308 Bbn	16	0154:29	88.8
18320 Abn	17	0053:50	73.6
18333 Bbn	18	0148:07	87.2
18345 Bbn	19	0047:28	72.1
18358 Abn	20	0141:45	85.7
18370 Bbn	21	0041:06	70.5
18383 Bbn	22	0135:23	84.1
18395 Abn	23	0034:43	69.0
18408 Bbn	24	0129:01	82.6
18420 Bbn	25	0028:21	67.4
18433 Abn	26	0122:39	81.0
18445 Bbn	27	0021:59	65.8
18458 Bbn	28	0116:17	79.4
18470 Abn	29	0015:37	64.3
18484 Bbn	30	0109:54	77.9

Oscar 8 Orbital Information

Orbit	Date (Nov)	Time (GMT)	Longitude of Eq. Crossing °W
3352X	1	0018:50	46.0
3366 Abn	2	0024:02	47.4
3380 Abn	3	0029:13	48.7
3394 Jbn	4	0034:25	50.0
3408 Jbn	5	0039:36	51.3
3422 Abn	6	0044:48	52.6
3436 Abn	7	0049:59	53.9
3450X	8	0055:11	55.2
3464 Abn	9	0100:22	56.5
3478 Abn	10	0105:33	57.8
3492 Jbn	11	0110:45	59.2
3506 Jbn	12	0115:56	60.5
3520 Abn	13	0121:08	61.8
3534 Abn	14	0126:19	63.1
3548X	15	0131:30	64.4
3562 Abn	16	0136:42	65.7
3576 Abn	17	0141:53	67.0
3589 Jbn	18	0003:51	42.5
3603 Jbn	19	0009:02	43.8
3617 Abn	20	0014:13	45.1
3631 Abn	21	0019:25	46.5
3645X	22	0024:36	47.8
3659 Abn	23	0029:47	49.1
3673 Abn	24	0034:58	50.4
3687 Jbn	25	0040:10	51.7
3701 Jbn	26	0045:21	53.0
3715 Abn	27	0050:32	54.3
3729 Abn	28	0055:43	55.6
3743X	29	0100:55	56.9
3757 Abn	30	0106:06	58.2

Four Terminals Are Better Than Three

—*using the new voltage regulators*

Stirling M. Olberg W1SNN
19 Loretta Road
Waltham MA 02154

Editorial comments in amateur publications to the effect that the integrated circuit manufacturers are putting together ICs faster than applications for them become known is certainly true of voltage regulators.

There have been numerous articles regarding the construction of bench power supplies which incorporate discrete components and transistors to accomplish an excellent job of regulating voltages at levels which can be adjusted via front panel controls. Additional circuitry which incorporates safety circuits such as overvoltage, overcurrent, and shutdown control to these discrete component circuits requires considerably more work to construct, but for certainly desirable features.

Three-terminal regulators such as the LM309K and all of the additional configurations which provide moderate current levels and fixed voltages can also have additional discrete components externally added to increase current availability and the above mentioned safety features. These have brought the construction of such a unit up to an evening's work to complete.

Available now are four-terminal variable voltage chips which provide all of these features and now make the construction of small regulated supplies a very simple job. These regulators come in either positive or negative configurations, allowing the construction of dual supplies such as one might require for use with TTL logic (this incorporates MOS logic that will require a higher voltage, like -12 volts).

Typical of these units are the Fairchild uA78G positive and uA79G negative chips. They are manufactured in three configurations known to me. One is TO-3 packages. A second is power tab packages both delivering continuous load currents of 1 Ampere with suitable heat sinks and with voltage ranges from 2.2 volts to 30 volts, depending on the voltage polarity. The negative range goes down to -2.2 volts, while the positive regulator starts at +5 volts. A maximum input voltage of 40 volts dc can be used from a raw source. Thirdly, power mini-DIP packages are available at .5 Ampere continuous, with similar

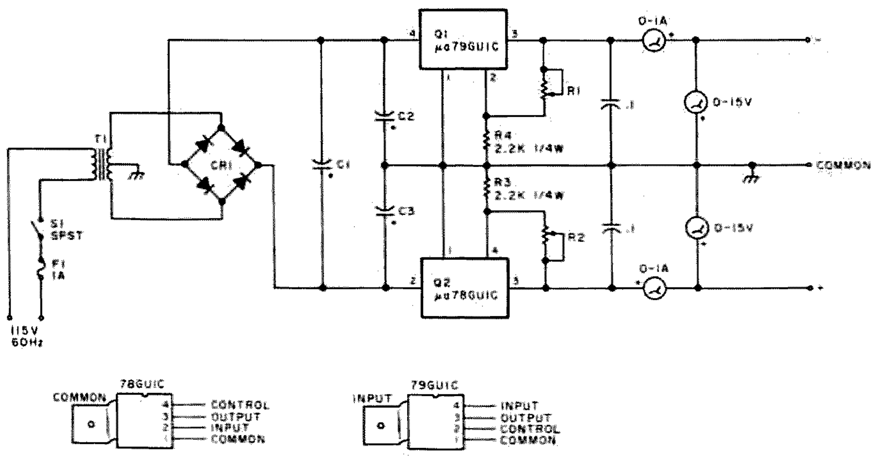

Fig. 1. Variable voltage 1 Amp regulated supply.

specifications.

All units feature internal thermal overload protection and internal short circuit protection, which are shutdown features. Additional external circuitry such as a current transistor can be added to any of these units to increase the current output availability up to 10 Amps. Not too far away are packages that will eliminate this requirement.

A circuit of a supply is shown in Fig. 1 along with a parts list of the hard-to-get parts. The supply will deliver 2.2 to -14 volts. The level is set by R1, a trimpot. This can be a larger pot with a knob if desired. The positive supply is adjustable from +5 to +14 volts by adjusting R2 to the desired voltage output as indicated on the voltmeter. Current is, of course, indicated on the ammeter. The two meters are "frosting on the cake" and can be left out if the constructor desires to decrease the cost of the unit. The heat sink area of the power tab is not large enough to carry the full output current; therefore, the tab must be fastened to the chassis or a large piece of aluminum to dissipate the heat generated. The positive regulator may have the tab connected directly to the chassis since it is at the common or ground point. This is not the case with the negative regulator—it must be insulated with a mica washer or other suitable insulation. Thermal joint compound, a silicone grease, greatly improves the thermal conductivity of these two connections and should be used. It can be obtained from the same source listed for the other components.

Attention should be given to the layout of the chips regardless of their configuration. They are not furnished with compatible pinouts for positive or negative regulators and you will come to some grief if attention is not given to this matter.

If higher voltages are required than those available in this supply, T1 must be changed to provide the difference. Remember that the current availability of the transformer must be at least twice the current required since a bridge rectifier is used. CR1 and C1 will not have to be changed since the specifications for these components exceed the requirements for the highest voltage that can be applied to the regulators.

Many manufacturers are making these units available in configurations similar to those described. Most of them require quantity buys and so the home constructor is hard put to obtain them. The units chosen here were obtained through the local Radio Shack store, which assisted by acting as the purchasing organization. Most Radio Shacks will accommodate your requirements in the same manner. The components listed can, of course, be duplicated from your junk box or wherever you acquire your parts. ■

Parts List

T1	25.2 volt, 2 A, Allied #705R0123
CR1	Full wave bridge, Allied #J5BB8
Q1	Fairchild uA79GU1C power tab
Q2	Fairchild uA78GU1C power tab
C1	2500 uF 50 volt, Allied #852-5239
C2, C3	DP solid dip tantalum, 33 uF, 35 V, Allied #623-0610
R1, R2	50k trimpot, ¼ W, Allied #854-6153

New Products

from page 22

The Slimline meter is ultra-compact . . . only 4½" W x 3½" H x .72" thick. It will mount flat on the front of a panel and operates on 120 V ac line power.

The bright 3½-digit display features special high-efficiency red-orange LEDs, which are exceptionally easy to read. This instrument is ideal for applications where many different current transformers are used (or may already be installed). It can be used to upgrade a switchboard without changing the current transformers, or in new installations, avoiding the expense and installation difficulties of standard DVMs.

The instrument is very stable (includes auto-zero and temperature stability of .01% full scale/degree Celsius) and is covered by an impressive 5-year warranty. For further information, contact *Nationwide Electronic Systems, 1536 Brandy Parkway, Streamwood IL 60103; (312)-289-8820.*

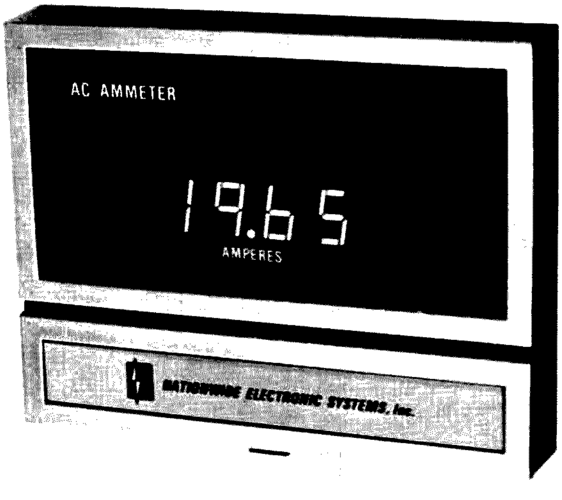

Nationwide's new Slimline ac ammeter.

MICROTRONICS M-65

The M-65 is a complete Morse code and RTTY system for the PET microcomputer. It is made up of two parts: the hardware and the software. The hardware consists of one PC board which is connected to your rig and to your PET user port. No modifications are required to either your radio equipment or to the PET—everything plugs into existing jacks. No external power supply is required. Both input and output circuits are optically isolated from the PET, thereby minimizing rf and spurious voltages. The board also has a built-in sidetone oscillator which connects to your speaker or headphones, making it ideal for teaching Morse code to large groups or to an individual. The built-in sidetone also allows "processed audio" reception of CW, which eliminates background noise and most QRM. The demodulator uses phase locked loop circuitry, which compensates for slight frequency drift and also adds an additional stage of audio frequency selectivity.

The software consists of two computer programs—MORSE and RTTY—supplied on one audio cassette. Both programs are written in BASIC with machine language subprograms. Each requires 8K bytes of RAM. Program MORSE allows continuous speed adjustment from one to 100 wpm in any of three modes of operation: receive, send, and code practice. In the receive mode, a CW signal will be automatically decoded and the resulting text will appear on the video monitor. Changes in the sending station's speed are automatically corrected for by means of an exponential smoothing technique. In the send mode, the system acts as a keyboard keyer—anything typed is encoded and directly

Continued on page 239

Tommy M. Murphy K5UKH
Rt. 1, Box 310A
Ethel MS 39067

CB to 10

—part XV: a Realistic HT

Photo by James Clegg

Walkie-talkie using external antenna connection to wattmeter and dummy load. Unit showed an output of over 1.5 Watts at 29.000 MHz.

The CB frequencies were recently expanded from 23 to 40 channels to handle the increased number of citizens using the band. Since many firms became "well off" from the sale of the 23-channel units, the thought was that the "gold mine" was going to strike a new vein and that the new 40-channel units would be the hottest thing going. So, everyone began dumping the 23-channel units at very attractive prices. Many hams were quick to grab the opportunity of getting some first class communications gear at a good price, and the CBers bought them up also at a fast rate.

Now enters a problem: So many transceivers of 23-channel capacity had been sold that when the 40-channel units came out, there just was not the anticipated demand for them, so now even 40-channel units can be found at low prices. Those who did buy the new 40-channel radios quickly found out that the high-powered "skip-land" boys had been up there for years, so the additional 17 channels were just about useless for the purpose for which the Citizens Band Service was established.

The word is apparently out that many manufacturers now believe that the market is saturated, and many bargains are appearing in CB gear. This is how I came to be the possessor of a couple of walkie-talkie units to convert to 10 meters. The radio is a 3-channel, 2-Watt input, 1-Watt output walkie-talkie, the Realistic TRC-180. My unit showed an output of slightly more than 1.5 Watts on a wattmeter into a dummy load, using fresh batteries. The unit normally sells for $40.95; I purchased these at $24.95 each, almost a 50% savings.

Specifications show that the unit has excellent sensitivity (.5 mV for 10 dB S+N/N) and spurious emission down -50 dB or better. The receiver draws 25

to 150 mA, depending on squelched or received signal condition, and the transmitter uses 250 to 500 mA. The walkie-talkie comes with CB channel 14 already installed, plus a set of AA batteries. Checkout showed that the unit was working perfectly. Some plus features include an earphone jack, an external antenna jack (to use a mobile or base station antenna), a power jack that allows you to connect to a 12 V dc source (such as a car battery), a charger jack for recharging nickel cadmium batteries without removing them, and a battery test button with LED indicator to show the condition of the batteries. There is no guesswork on the LED: If it lights, the batteries are okay; if they're not alright, there's simply no light!

The walkie-talkie was easily converted to 10 meters with just a substitution of crystals and the retuning of the transmitter and receiver stages. After looking at a number of schematics on the general run of units of this nature, the majority have the basic 455 kHz i-f, so conversion of most should be fairly simple. I designated the channel "A" position to be 29.000 MHz, which calls for that frequency for the transmitter, of course, and a 28.545 MHz crystal for the receiver. I still have two additional channels to add, when the need arises. The built-in antenna measures 39½ inches long extended and has an internal loading coil. Rather than messing with the coil, I just reduced the length of the whip by almost 3 inches (using a field strength meter to find the point of maximum output of rf) to make it resonant at 29 MHz. To ensure that I returned each time to the proper length, I simply marked the top section by scratching on the metal rod.

Now, if we are going to be able to utilize these bargain low-powered transceivers on 10 meters for a whole bunch of fun, frequency placement will to a great extent determine the usefulness. There are a number of band plans around, with each one extolling its own virtues. Yes, I have one, too! It's quite simple, and, best of all, it is using a section of the band that is not heavily used at the present. Looking at one plan, the proposal calls for (what I call the AM band) channel 1 to start only 10 kHz inside (what I call the SBB band) at 28.560 MHz, and, from there, the spacing is in steps according to the original CB channels. Shades of 75 meters, AM versus SSB, back in the old days! I can just imagine how these low-powered radios will play when the band opens up a little and that funny "Donald Duck" stuff starts coming in. It'll be just like the HF bands back in the 1960s — one big hassle, then the demise of AM.

Why not avoid the problem to begin with and put these converted CB radios up a ways in the band? This way everyone has lots of room to do "their own thing," and if the sideband boys want to QSY to talk to the AM QRP fellows, well fine! So, let's simplify things and be "good guys" in the process.

CW — 28 to 28.5 MHz
SSB — 28.5 to 29 MHz
AM — 29 to 29.290 MHz

I realize that CW is not restricted, but very seldom do you hear it above 28.5 MHz, simply because of good operators plus there is 500 kHz to move around in. The SB boys have a lot of room also, and, as a matter of course, do not normally go above 29 MHz. With a band the size of 10 meters, there's room for all, and QRP operation with these converted radios will be most enjoyable. If we want to make it hard on ourselves, well then hardly anyone (besides Quack, Quack) will be able to talk! See you on channel 1, 29.000 MHz! ■

New Products

from page 227

keys the transmitter.

Program RTTY has two modes: send and receive. In the receive mode, the mark and space tones will be decoded and the resulting text displayed on the video monitor. Either wide or narrow shift at 60 wpm will work equally well. Both HF and VHF reception are accommodated. In the send mode, all Baudot characters and punctuation may be sent from the keyboard. In addition, up to ten programmable message memories (2550 characters total) allow "brag tapes," pictures, etc., direct from the keyboard. A special feature allows sending the time automatically at the press of a single key! Automatic FIGS (shift), LTRS (unshift), line feed, and unshift-on-space are included. Reverse screen image separates sending from receiving text. One key allows switching between send and receive. *Microtronics, 5943 Pioneer Road, Hughson CA 95326; (209)-634-8888.*

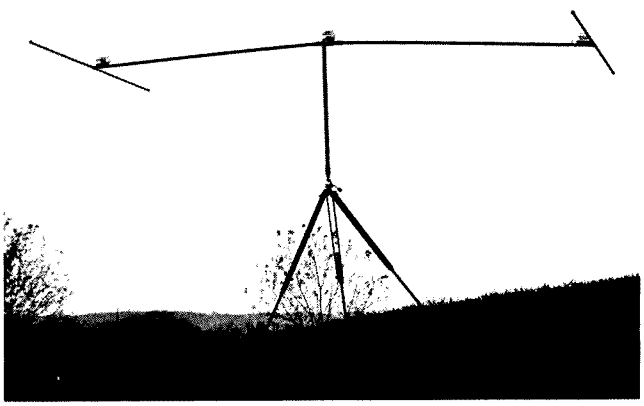

Smithe's new HF Bantam Dipole.

ALLBAND MINIATURE DIPOLE

Antennas by Smithe has come up with a truly portable allband miniature dipole complete with its own carrying case and mast/hardware to mount on a camera tripod or 3/8" x 24 stud. High performance is obtained with the HF Bantam Dipole on 80-10 meters at its normal 13 foot length, or the same antenna may be shortened to 7 feet for 75-10 meter coverage. Polarization is quickly interchangeable from horizontal to vertical. No ground system is necessary. The HF Bantam Dipole is ideal for camping, traveling, mountaintopping, apartment living, or if you're stuck with building code restrictions. Construction is of high quality 6061-T6 aluminum and stainless steel hardware. Dealer inquiries are invited. U.S. patent pending. Send an SASE for spec sheet and other Smithe antenna products to *Comm Center, Inc., Laurel Plaza—Rte. 198, Laurel MD 20810; (301)-792-0600.*

NEW-TRONICS INTRODUCES 5- AND 11-ELEMENT HUSTLER 2 METER YAGI ANTENNAS

Two models of the new Star Tracker™ series of Hustler 2 meter yagi antennas have been announced by New-Tronics Corporation. These 5- and 11-element rotatable beam antennas are completely tunable from 144-148 MHz, with a unique adjustable matching system for 1.5:1 or better swr. At resonance, swr is typically 1.1:1. This system provides for optimum energy transfer without sacrificing gain or pattern control.

High forward gains and large front-to-back ratios put Hustler 2 meter yagis in an ultra-high performance category. Half-power (3 dB) beamwidths are exceptionally narrow. In addition, each model can be easily mounted for vertical or horizontal polarization for station-to-station VHF DX work.

The Star Tracker model ST-5

Continued on page 242

The Circuit Board Aquarium

—no fish story

John A. Burton WB9QZE
2282 McKinley Ave.
Columbus IN 47201

I have always wanted a better way to etch my printed circuit boards than by hand agitating a tray. A couple of years ago, my wife was putting away her aquarium equipment when an idea hit me. At the company where I work, we have an etching tank that is agitated by air, and my wife's aquarium tank was also agitated by air. What I needed now was a tank that would require the minimum amount of etching solution and a way of dispersing the air. Another consideration was how large to make the tank, or how large a printed circuit board would I ever need to etch. I finally decided on a tank size which could be filled with one pint of etching solution. This came out to be 7 x 10-5/16 inches. These are inside dimensions and can be changed to suit each individual's needs. In order to disperse the air, a divider is placed at the bottom of the tank with a series of holes drilled in it. This has worked out very well in dispersing the air. The cost of the material is about $15 if you have to buy it all new. This breaks down to $7 for the air pump, $5 for the Plexiglas™, and $2 for the tubing and aquarium cement. All these parts, with exception of the Plexiglas™, can be found at most stores that have a tropical fish section, or, if you are lucky, at some garage sales.

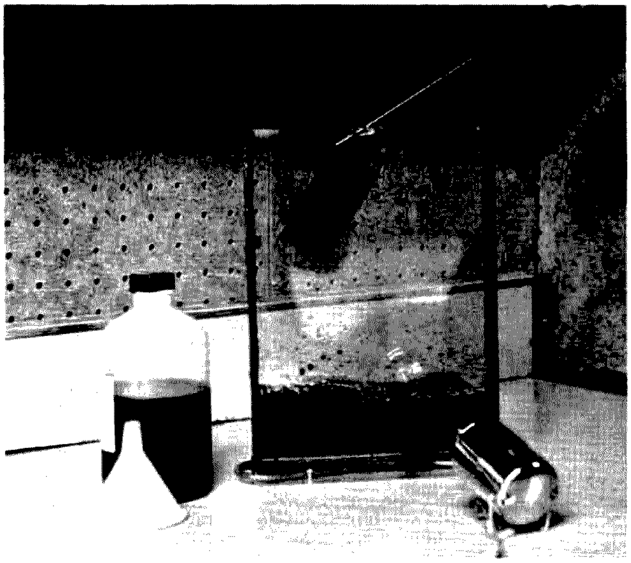

Completed etching tank in action showing removal of finished PC board.

Construction

Construction is not very difficult (refer to Fig. 1). The first thing is to deter-

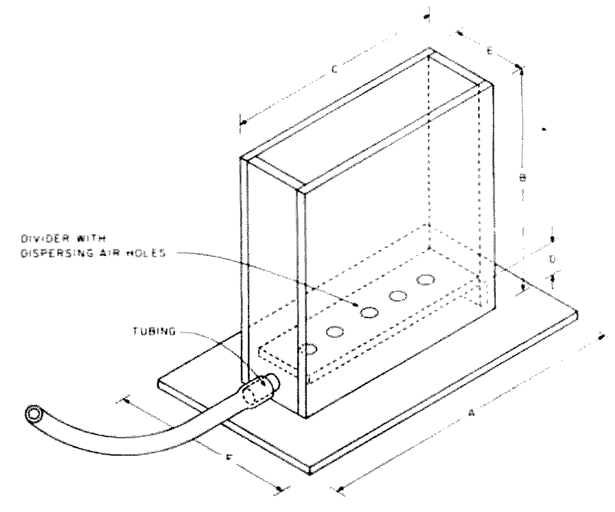

Fig. 1. Etching tank construction details.

mine the size of tank you want to build and buy your Plexiglas™. Most glass companies handle it, and a local firm priced it at $2.50 per square foot. This included cutting it to size. Before assembling the tank, drill all the required holes. There is one hole for the tubing and the small holes for the divider. The holes that I put in the divider were .055 inch in diameter and about one inch apart. Prefit all the parts together to get an idea of how they go. Start by gluing the two small sides to one of the large sides. Now glue in the divider and the other side. After this has set up, glue on the bottom and the air tube. I also glued the air tube to the side of the tank so that it would not be flexing at the joint. This finishes the construction of the tank. Fill it with water and check for leaks. My tank had several leaks because I had used Plexiglas™ glue and it did not seal the rough edges that I had. I then went over all the joints with aquarium cement and that took care of all the leaks. Unless you can get a square edge on your Plexiglas™, I would recommend using only aquarium cement.

Operation is easy. Just remember to always have the pump on before putting in the etching solution and to pour out the solution before turning the pump off. This will keep the etching solution out of the pump. The air flow can be adjusted for different levels of solution and agitation. I only fill my tank enough to cover my board. I have etched several small boards and, in all cases, it has taken about 15 minutes.■

New Products

from page 239

is a compact 54" 2 meter beam with 5 optimally-spaced elements. Forward gain is greater than 10 dB, and the front-to-back ratio is greater than 22 dB over the 4 MHz bandwidth. End mounting gives the ST-5 broad frequency response and eliminates mast decoupling. Half-power beamwidth is nominally 50°.

The model ST-11 Star Tracker is a 144" center-mounted 11-element beam. Optimum element spacing provides a forward gain of greater than 13 dB. Front-to-back ratio is greater than 27 dB over the 4 MHz bandwidth. Half-power beamwidth is nominally 36°.

The lightweight, high-strength design of the new Hustler yagis makes installation easy and provides long life. The boom and driven element of each model is ¾" o.d., top-quality, heat-treated, seamless aluminum tubing. Reflector and director elements are 3/16" o.d., high-strength, solid aluminum rod.

Hustler furnishes all stainless steel hardware, and the corrosion-resistant steel clamps used throughout are fully adjustable, including the special boom-to-mast clamp. This unique method of clamping keeps all elements in place regardless of weather conditions.

For further information on these or any Hustler products, write: Sales Department, *New-Tronics Corporation, 15800 Commerce Park Drive, Brookpark OH 44142.*

IC INSERTION TOOL

OK's new model MOS-40 DIP inserter handles all MOS, CMOS, and regular 36- and 40-pin ICs, as well as bent pins. A twist of the handle com-

Continued on page 275

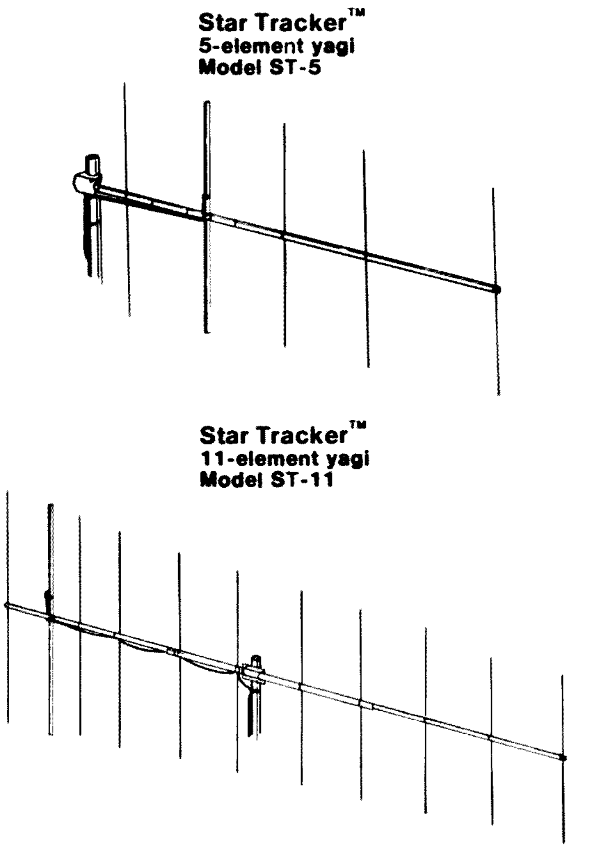

Hustler's new 2 meter yagis.

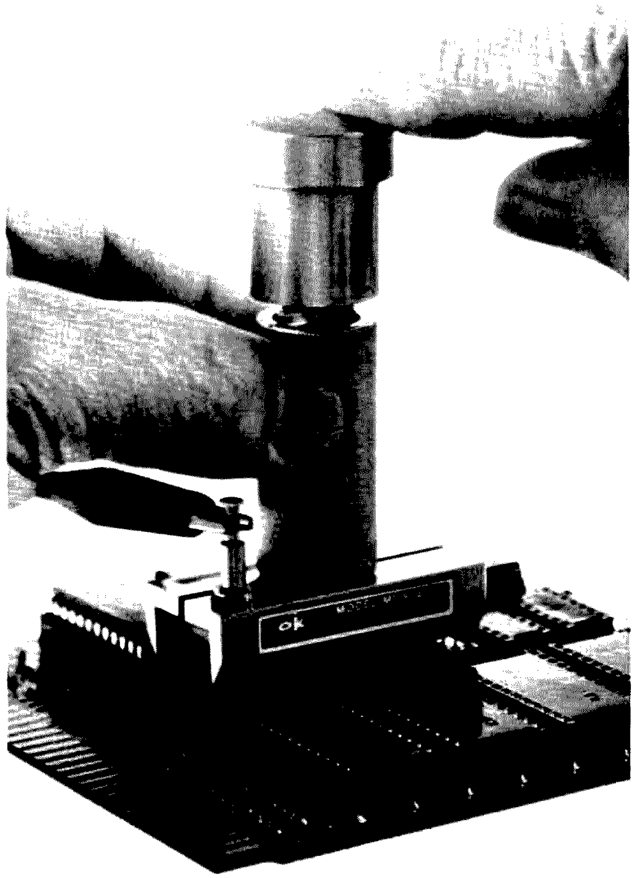

OK's MOS-40 IC insertion tool.

Joseph J. Carr K4IPV
5440 South 8th Road
Arlington VA 22204

Build A Decent Dummy

—no oil, no light bulbs, no hassle

A "dummy load" is an artificial antenna that does not radiate a signal and is used to tune up, test, or troubleshoot your station transmitter *without* going on the air and creating ill-mannered and illegal interference. Ideally, the dummy load looks to the transmitter like a perfect resonant antenna at all frequencies between dc and daylight. In a practical dummy load, this means that it should be resistive (i.e., *no* reactance) at all frequencies that the transmitter will cover. Furthermore, it should have a resistance equal to the optimum impedance the transmitter is designed to feed, or the impedance of the antenna system normally used with the transmitter.

The dummy load should have sufficient power-handling capability to allow it to absorb the full transmitter power for a couple of minutes at least. (Indefinitely would be nice, but it becomes very expensive at power levels over about 100 Watts.) This will allow you to become absorbed in what you are doing without having to worry about the condition of the dummy load.

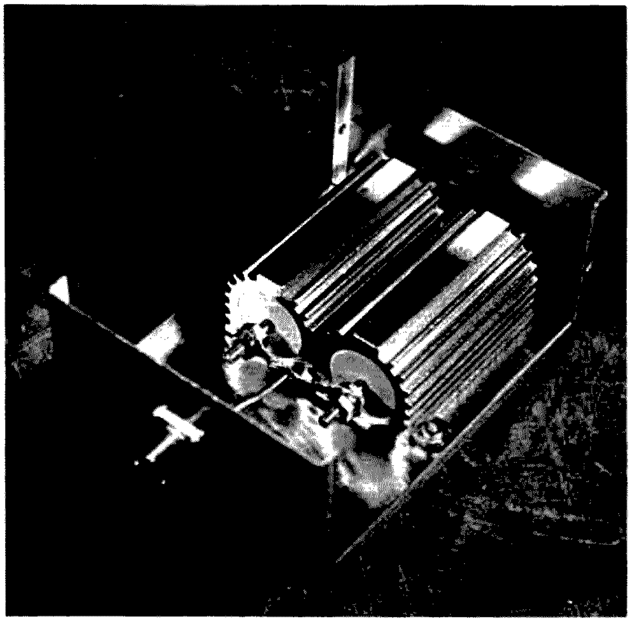

Another requirement is that the load be shielded so that rf radiation is reduced. Even at milliwatt powers, unshielded rf sources can interfere with nearby receivers. If you doubt this, try tuning a grid- (or gate-) dip oscillator through the TV channel frequencies while watching the TV screen. Even at distances of several feet, "herringbone" patterns will appear. If a 50 mW source will do that, imagine what a 200-Watt transceiver will do!

Crude Dummy Loads

For low power rigs (i.e., up to about 200 Watts), many amateurs use an ordinary 50- to 250-Watt incandescent light bulb as a dummy load. A short piece of coaxial cable is fitted with an rf connector on one end and the other end is split to allow it to be fastened to a standard Edison-base lamp fixture. When the transmitter is out of resonance, very little power is delivered to the load, so the bulb will show a dim orange light. When the plate tuning capacitor is adjusted to resonance, the light will increase and become white in color, making an impressive display of output power (even though somewhat meaningless).

The light bulb dummy load is not good practice for a couple of reasons. For one thing, the resistance of the bulb is not constant, but changes as the bulb heats up. The impedance seen by the transmitter, then, varies markedly from low to high power. It is rarely actually within the 50- to 75-Ohm range deemed optimum for most amateur transmitters, but will have some other value.

Secondly, the light bulb will radiate. I have heard a local station 7 to 8 miles away producing an S8 CW signal at my location while loading an HW-101 into a light bulb dummy load.

Attempts are sometimes made to reduce radiation from the light bulb, with varying results. A few amateurs have painted the light

bulb's glass bulb down to the base with conductive copper paint, leaving only a small "peephole" to view lamp brilliance. This works very poorly. Other attempts, usually more successful, involve placing the lamp and socket assembly inside a metal box, but this still leaves the problem of the varying load.

Commercial Dummy Loads

Even a brief scan through the professional communications test equipment catalogues will reveal that professional dummy loads are very costly. Even military surplus loads bring a premium price from dealers and hamfest attendees alike. One friend of mine was extremely lucky to find a dc-to-VHF Bird 1000-Watt load in good condition at a hamfest. He was ecstatic to pay only $125! To him, it was worth it because he does a lot of amateur research (some of which is very professional), but to the average amateur that one-eighth kilobuck is better spent elsewhere.

One company offers a low-cost amateur dummy load that gives very good performance up to about 30 MHz. I bought one and have found it very useful. The problem is that it is perpetually a mess. It seems that the actual 50-Ohm element is rated at only about 100 Watts. This is extended tenfold by mounting it in a paint can and filling the can with oil (user provided). Everything goes fine for about two months, after which the XYL comes in and wants to know about that ring of oil on the floor. The oil seeps up around the can lid and finds its way outside of the can. Most owners of this product, I suspect, tend to place them in a plastic container and relegate them to the garage or a little-used corner of the basement. I want a dummy load that is *dry*, so that I can mount it behind my operating desk and switch it in, using a coaxial switch, whenever required.

A Home-Brew Alternative

Fig. 1(a) shows a 200-Watt dummy load that is suitable for most stations running an exciter or transceiver in the 200-Watt class. It will also work for those running power up to about 400-Watts input if the proper time-on (duty cycle) is observed.

The actual load is formed by paralleling two 100-Ohm, 100-Watt noninductive resistors (Dale NH-100). Other combinations will also work, as long as the power rating is sufficient and the parallel resistance of the circuit is either 50 or 75 Ohms (as desired). If you wanted to be ridiculous about it, for example, you *could* parallel 100 two-Watt resistors each of which has a value of 5k Ohms. Realistically, though, any combination of noninductive resistors with a total of 50 Ohms that requires not more than five or six actual resistors is sufficient. You will find that 50- and 75-Ohm noninductive power resistors are hard to find, so a combination is necessary.

I wanted two additional features in my dummy load: an oscilloscope output and a dc output that is proportional to the power. The resistor voltage divider shown as part of Fig. 1(a) was used to provide the dc level. Resistors R3 and R4 reduce the rf voltage across the load to a level that can be handled easily by the 1N60 rectifier. Capacitors C1 and C2 plus resistor R5 form a low-pass filter to remove any residual rf and leave just pure dc. The assembly was built into a small aluminum box outboard to the unit (Fig. 2). A second voltage divider exactly like R3/R4, but without the rectifier and filter, provided the oscilloscope output.

In a later version, the circuit of Fig. 1(b) was substituted for the voltage divider circuit used originally. This modification uses a pair of toroid current transformers such as are normally used in swr meter and rf power meter projects published in *73 Magazine* and the ARRL *Radio Amateur's Handbook*.

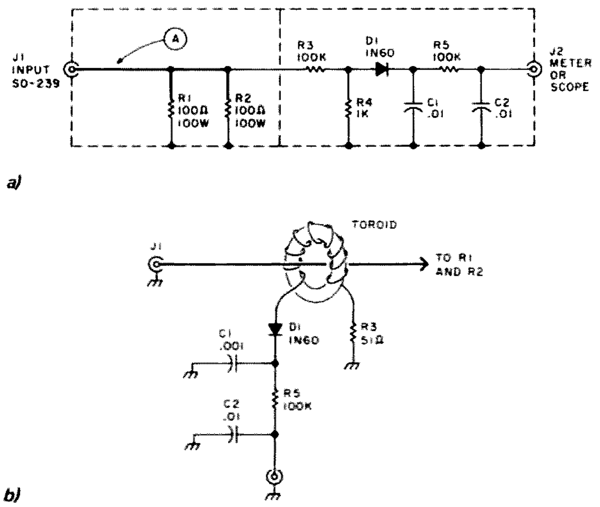

Fig. 1. (a) Circuit for dummy load. (b) Modification using a toroidal current transformer for the rf pick-off.

Almost any high-frequency toroid will work for this application. Wind approximately 40 turns of #28 magnet wire (enamel insulation) on the form. Terminate one end in a 50- or 75-Ohm carbon resistor, and connect the other end to the rectifier. The oscilloscope output is made in exactly the same manner, except that the rectifier-filter network (D1, C1, C2, and R5) is deleted.

A metal snap-together box was used for the housing, and this is considered the *minimum*. Be wary of metal boxes and utility cabinets with poorly fitting edges or no overlapping edges. Some use a butt joint with little cutouts along each edge to make them fit, and those are useless (and not very strong). If a die-cast aluminum box with a tight seal is available, then use it. The tighter the seal, the lower the radiation. ■

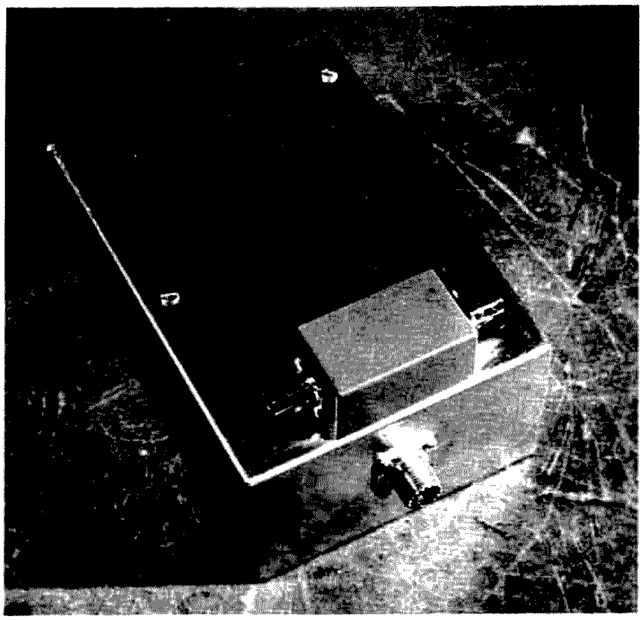

Fig. 2. External view shows the pick-off box mounted piggyback to the main assembly.

Who Needs Transistors?

—you do!

Carl C. Drumeller W5JJ
5824 NW 58
Warr Acres OK 73122

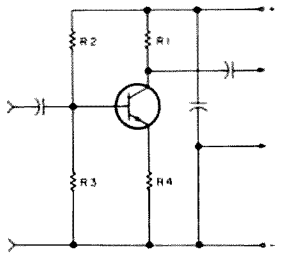

Fig. 1. Common-emitter bias configuration.

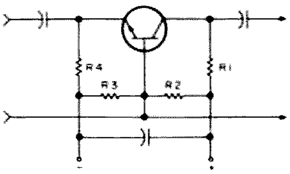

Fig. 2. Common-base configuration.

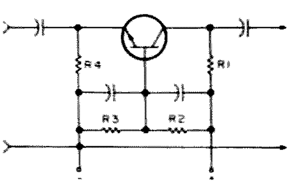

Fig. 3. Practical common-base circuit.

Although ICs are the "in" item for experimenters and homebrewers, the old bipolar transistor still has its place. Most experimenters have a junk box well populated with assorted transistors. If not, they can be bought cheaply, or mooched from friends who have an overstock. The purpose of this article is to encourage using transistors—not only using them, but using them to maximum advantage.

Most of the diagrams you see show transistors used in the grounded-emitter (or common-emitter) configuration. There are times, though, when it would be better to employ the common-base configuration. Then one must tackle the problem of providing proper bias for that mode.

Take a look at Fig. 1, which shows an excellent bias circuit for a transistor in the common-emitter configuration. Let's review it a bit. The four resistors have been given an arbitrary set of numbers, although there is a slight amount of logic involved. The collector resistor is vital to permit power to be taken off, so it's #1. Bias of the same polarity as the collector voltage must be supplied to the base before collector current will flow, so that resistor is #2. To provide bias stability, there's need of a voltage-divider effect between the collector supply and "ground," with a tap for the base, so the lower half of that divider gets a #3 ranking. A bit of emitter bias serves two purposes: It helps to prevent thermal runaway and it tends to "smooth out" the differences between individual transistors of the same type, thereby enhancing the interchangeability of transistors. You can live without it, though, so it gets the lowest ranking: #4.

Resistor #2 is quite important. Contrary to general presumption, its value has a considerable bearing upon the circuit gain. It's suggested that you build up a test circuit like that of Fig. 1. Make it for audio frequencies, which means you should select input and output capacitors of values that'll pass af readily—somewhere between 100 nanofarads and 100 microfarads. If you're concerned only with circuit gain, put an audio signal generator on the input and an ac voltmeter across the output. With a very low voltage from the signal generator (overdriving will destroy the validity of the adjustment), adjust R2 for maximum output. Use a variable resistor initially for R2. After the adjustment is made, measure the resistance and substitute a

fixed resistor. If, however, you're primarily concerned with purity of waveform, use an oscilloscope as the output indicator and adjust R2 for simultaneous flattening of positive-going and negative-going peaks as the input signal level is advanced to the distortion point.

After you've found the optimum bias for a transistor used in the common-emitter configuration, the next step is juggling the circuit to retain that value of bias in a common-base circuit. Fig. 2 shows the first move, and Fig. 3 illustrates the desired circuit.

Now that you've got a common-base circuit, what can you do with it? For one thing, it makes an excellent active impedance-matching device. It'll match a low-impedance microphone to a high-impedance input circuit very well indeed. In rf applications, it needs no neutralizing, making it ideal for a tuned preamplifier. Just replace R1 with a resonant circuit. You may have to place ferrite beads on the transistor's leads to avoid UHF parasitics. If you want a stage that will amplify without the 180° phase shift of the common-emitter configuration, the common-base circuit meets that requirement.

As an impedance transformer, try the circuit in Fig. 4. I've used it to match a 25-Ohm dynamic microphone to the high-impedance input of a Drake TR-4C transceiver.

If you need a little extra gain at the front end of a receiver, and most receivers lack gain on 21 MHz and especially on 28 MHz, use the circuit of Fig. 5. The unbypassed emitter resistor serves as a matching termination for the coaxial feedline to an antenna, and the source-follower (common-source) FET stage transforms the high impedance of the resonant circuit to a value suitable to match the input of most receivers.

The individual transistor is far from being obsolete. It's especially good for experiments and for use in simple projects. It's not a "black box." You can see what's being used and can analyze what's taking place. In short, it's an ideal device for the amateur who wants to keep building projects but lacks the time (or desire) to tackle complex IC projects. ■

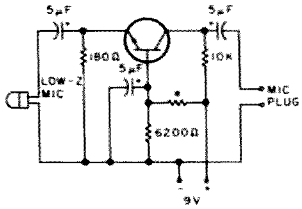

Fig. 4. Impedance-matching circuit.

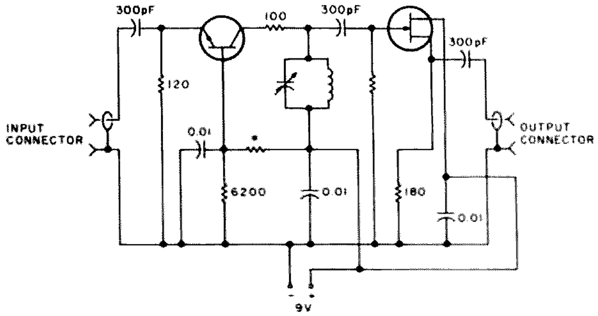

*Fig. 5. Preamplifier circuit. Adjust resistor marked with an * for maximum gain.*

Carl C. Drumeller W5JJ
5824 NW 58 Street
Warr Acres OK 73122

A Junk Box Load Simulator

—*for battery testing*

It's often inconvenient to test the voltage of a 9-volt battery under its normal load, and testing one with a low-current voltmeter gives a reading that is almost meaningless.

Here's a way to make up a handy little device for providing a load to the battery. The next time you're ready to toss out a dead 9-volt battery, take a pair of diagonal cutting pliers, pry off the top, and detach it from the interior cells. You'll note that this top will mate with the connectors on a new battery. So, just solder a ½-Watt resistor of somewhere between 500 and 1000 Ohms across the connectors of the old top. Now, when you're ready to test a battery, just clip it on the new battery and apply the voltmeter. The load of the resistor will place a drain typical of the average device powered by a 9-volt battery, so you'll be reading the voltage under a typical operating condition. If it's under 8 volts, discard the battery. ■

Blockbuster RTTY Article!

—Selcal and W-R-U on a budget

Richard R. Parry W9IF
38 W 255 Deerpath Rd.
Batavia IL 60510

How do you make a great mode like RTTY even better? Easy—join an autostart group. Any RTTY aficionado can join an autostart group. Autostart operation allows friends to keep in contact with each other, and, best of all, you don't have to be present to receive the message. The teleprinter is controlled by the station sending the message.

If an all-call system is used rather than a selective calling system like the one described in this article, chances are you will come home to a teleprinter with an empty roll of paper. If you don't mind culling through the printout looking for your note, and if you're one of the amateurs with plenty of teleprinter paper to spare, the simple all-call circuit will be just fine. However, most autostart members prefer a selective calling system (Selcal) to ensure only notes addressed to them are received.

Before the burgeoning of integrated circuits, the selective calling system used a mechanical stunt box. The stunt box is a subsystem of the Model 28 teleprinter which allows the user to program control functions into the teleprinter by inserting code bars. Typically, an autostart enthusiast would program the stunt box so that the last three letters of his call would turn on the teleprinter, and four consecutive Ns (NNNN) would turn it off. While this system works well, few amateurs are fortunate enough to own a Model 28.

One other pleasant feature of an autostart station is the W-R-U system. Leaving a note for a friend can be a hit-or-miss affair unless you are sure his equipment is up and running. While some autostart members leave their equipment on 24 hours a day, it is still reassuring to receive some feedback informing you that the equipment is functioning and that you are not just talking to the air (no pun intended). An answer-back system, also referred to as a Who-Are-You (W-R-U), allows one to, in essence, interrogate the condition of the equipment. To interrogate the station's status, one typically types the last three letters of the station's call followed by the characters Figures, Blank, and H. When the W-R-U circuit detects this sequence, the receiving station's transmitter is turned on briefly and a short message is sent. Some stations transmit a short message giving the station's call and location. Other stations may transmit, in addition to the above, the present time and date.

Photos by Anthony Donaldson

The W-R-U has an additional feature—it can be used to ascertain present propagation conditions. Imagine being able to turn on a transmitter thousands of miles away to confirm the present propagation characteristics. Thus, if there is no signal, or perhaps only a weak signal in answer to your W-R-U attempt, you may then decide not to attempt a full message.

Note that, unlike the Selcal system, a licensed amateur must be on the premises in order to legally have the W-R-U system operational.

Fig. 1 shows the block diagram of the Selcal and W-R-U system described in this article. The circuit was fabricated on two printed circuit boards: IF-1 and IF-2.

The IF-1 circuit has two functions. It changes the serial output data of the demodulator to parallel data and simultaneously regenerates it. Parallel data simply indicates that all five bits of the Baudot code are available simultaneously. This parallel

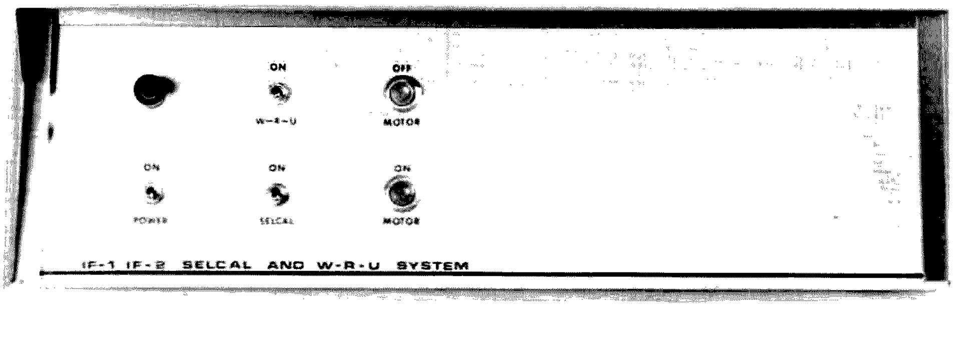

Photo 1. The IF-1 and IF-2 Selcal, W-R-U, and regenerative repeater.

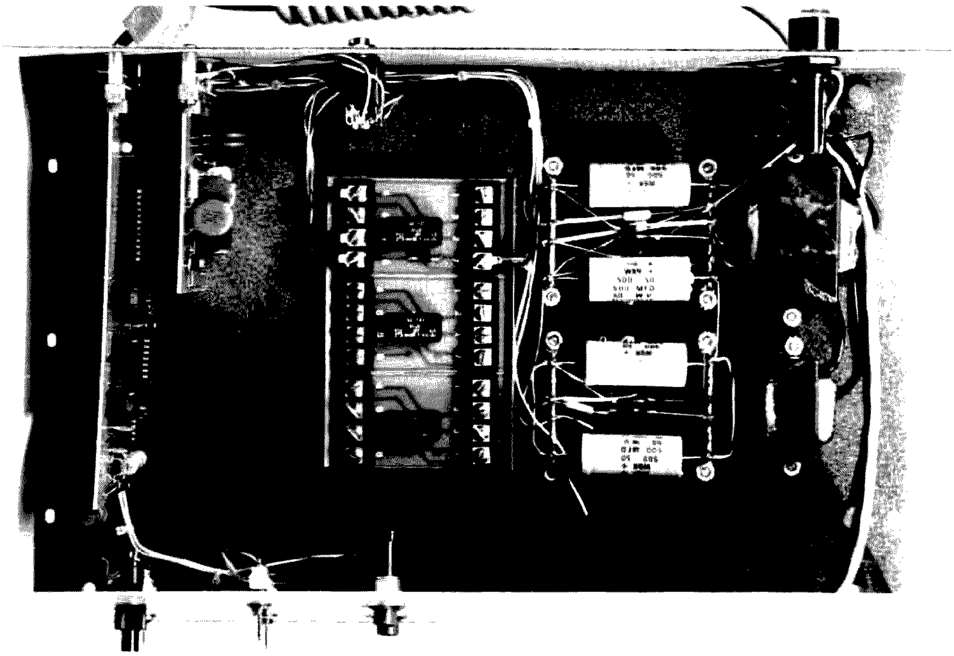

Photo 2. Top view of the unit. The IF-2 Selcal and W-R-U board is shown at the extreme left. The IF-1 regenerative repeater board is located to its immediate right. The relays to control the teleprinter, transmitter, and W-R-U message generator are shown slightly left of center. The power supply uses the remainder of the chassis.

data is then fed back into the UART chip, giving us serial data once again. However, it should be noted that this serial data has been regenerated and is free of distortion. For this reason, it is called a regenerative repeater. If you built only this portion of the project, you would already have improved your station.

The IF-2 circuit decodes the parallel data and determines what operation is called for (i.e., turn on the teleprinter, turn off the teleprinter, turn on the transmitter).

Building this particular Selcal and W-R-U system has several advantages. For example:

- The Selcal and W-R-U access code can be programmed in a matter of minutes.
- The Selcal and W-R-U access code may be programmed for any Baudot code character.
- The W-R-U circuit automatically shuts down after a predetermined time-out period. Therefore, the transmitter cannot be latched in the "on" state simply because a shutdown command was not received.
- Open collector outputs allow easy interfacing between the unit and the station.
- Many interfacing techniques are available. One method allows the W-R-U circuit to turn on the transmitter for "x" seconds (typically 10) before the W-R-U message is sent. This grace period allows time for tuning and actuating switches by the receiving station if necessary.
- For those with a UT-4 or some other serial to parallel circuit, the IF-1 board is not required.
- For those simply wishing a regenerative repeater, the IF-2 board is not required.
- For those wishing only a Selcal, only a portion of the IF-2 circuit need be used.
- Construction of the unit is facilitated by the use of professionally fabricated and drilled printed circuit boards available from the author.

The Regenerative Repeater

The IF-1 circuit has two functions: It changes the serial data to parallel, and it regenerates the signal at the same time. The regeneration process removes bias distortion from the

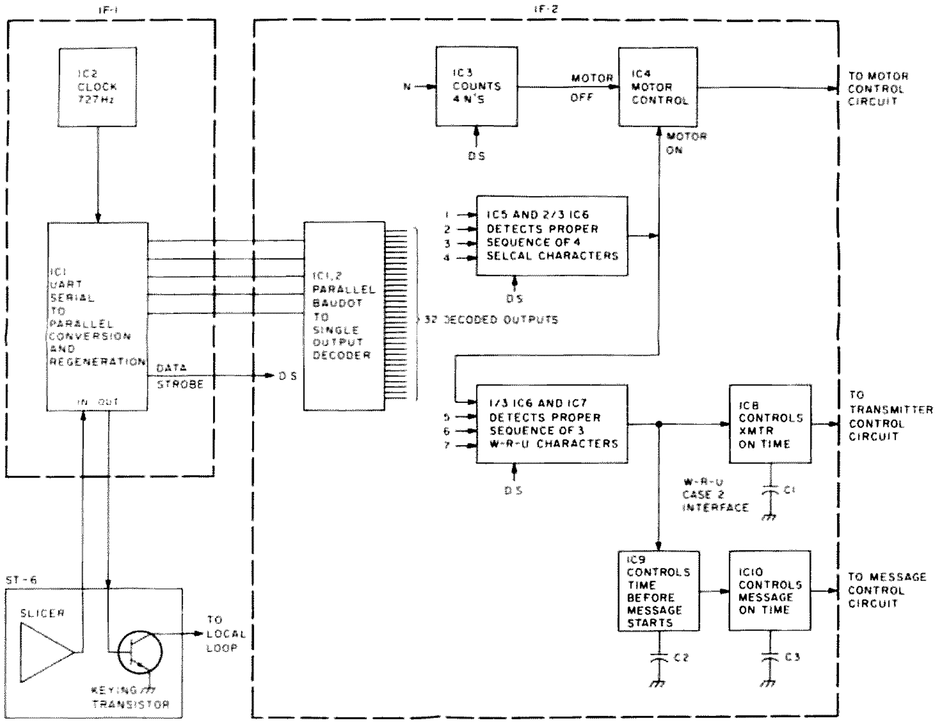

Fig. 1. Block diagram.

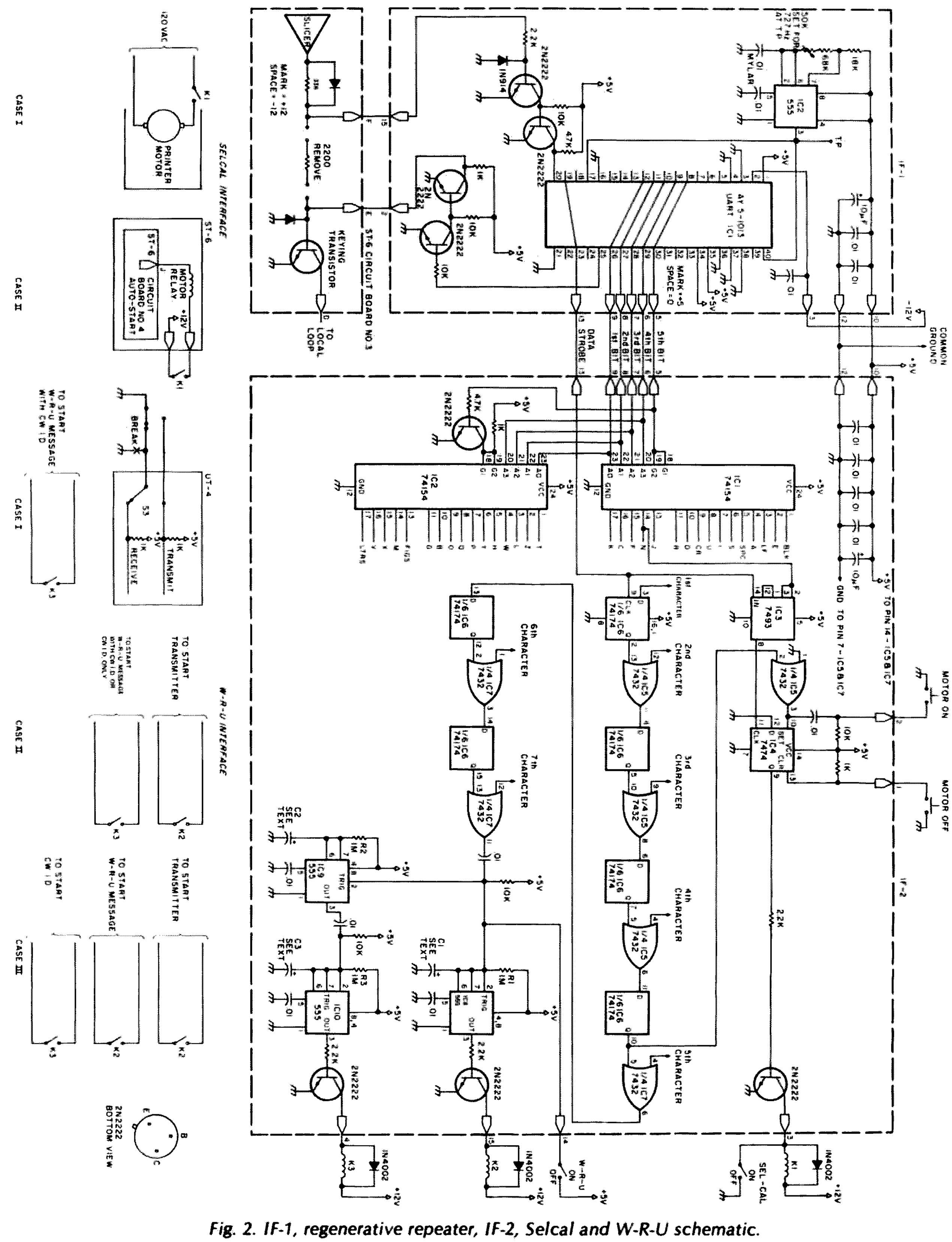

Fig. 2. IF-1, regenerative repeater, IF-2, Selcal and W-R-U schematic.

signal. Other distortion, such as that which comes from dirty keyboard contacts, is also removed. All this is accomplished by a super chip, the UART. UART is the acronym for Universal Asynchronous Receiver Transmitter. A knowledge of the operation of this sophisticated integrated circuit is not necessary to build this project. However, for those interested in more information on the UART,

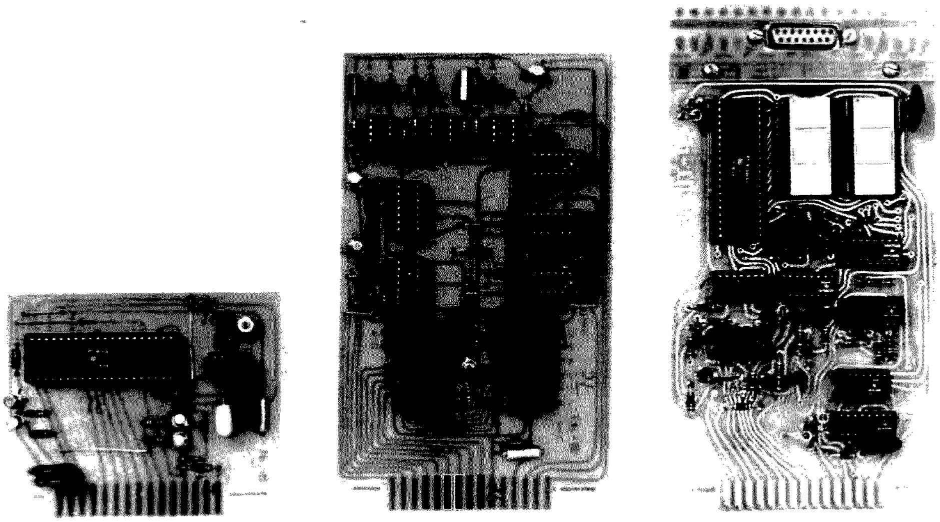

Photo 3. The small IF-1 regenerative repeater board is shown at the extreme left. In the center is the IF-2 board which contains the necessary circuitry for the Selcal and W-R-U. To the right of the IF-2 board is a UT-4 board that contains a UART. This board is not required for this project; however, it is shown here to indicate how those amateurs with a UT-4 using commercially fabricated boards may pick off the parallel data from the UART. Note that an extension was added to the board which contains a multi-pin connector. Wires from the output of the UART were run to the connector under the board. Using this method to obtain parallel data obviates the need for the IF-1 board.

see the series of articles by Irv Hoff listed in the references. Note that the UART is a MOS device and as such is sensitive to any electrostatic or high-voltage charge. This is why the device is shipped in a conductive material. Because of possible damage, the UART must be handled properly. Rather than define "properly" here, I refer the reader to the article by John Magee listed in the references.

The output of the slicer stage of a demodulator such as the popular ST-6 is +12 volts in the mark state and −12 volts in the space state. This is just the opposite of the RS-232C standard for interfacing. The slicer output is connected to a conditioning circuit consisting of two transistors in order to convert it to TTL levels for the serial input of the UART, pin 20.

Fig. 3 shows a timing diagram of a character traveling through the UART. Note that the output of the slicer, plus and minus 12 volts, is converted to +5 and 0 volts at pin 20. Pins 12, 11, 10, 9, and 8 are the 1st, 2nd, 3rd, 4th, and 5th bits of the Baudot code, respectively. These output pins do not change state until clocked by a data strobe generated within the UART. This data strobe signal is available at pin 19 of the UART. It is used by both the IF-2 circuit and by the transmitter section of the UART. It is the task of the transmitter section of the UART to convert the parallel data at pins 26, 27, 28, 29, and 30 back to serial data at pin 25.

The TTL output level at pin 25 of the UART is not capable of directly driving the demodulator's keying transistor. Therefore, an additional conditioning circuit consisting of two switching transistors connected as inverters is used to drive the keying transistor. IC2 is the clock for the UART and its output is available at the test point (marked T.P. on the PC board). It should be set at sixteen times the baud rate. For 60 wpm operation, this means a frequency of 727 Hz (16 x 45.45).

Decoding

The main purpose of the IF-1 circuit is to convert the serial data to parallel data so that all five bits of data are available simultaneously. Our next task is to decode these five bits of data so that each of the 32 possible Baudot characters has its own output port. To accomplish this end, two 4-line-to-16-line decoders are used. Each of these is capable of decoding a 4-bit binary number and addressing one of 16 outputs. Since the Baudot code is a five-bit code with 32 combinations, we use two of these chips to obtain the necessary 32 output ports. Only one of these chips is on at a time. In addition, only one of the 32 outputs is low at any given time. Table 1 shows the truth table for this Baudot decoding circuit. Pins 18

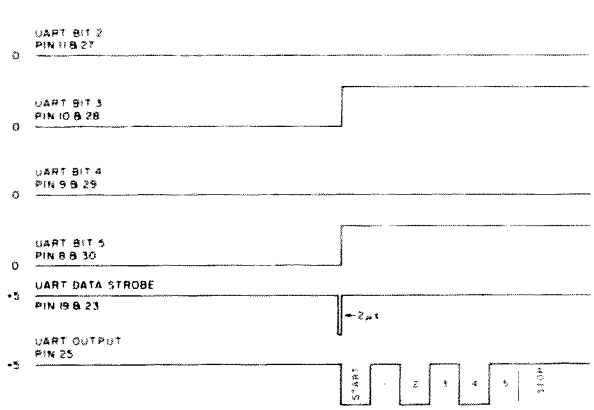

Fig. 3. UART timing chart.

Photo 4. This photo shows an IF-2 Selcal and W-R-U system that was integrated into a UT-4. Only four switches are devoted to the Selcal and W-R-U circuitry.

and 19 of the 74154 are gates that must be low to enable the chip. Note in Fig. 2 that an inverting transistor circuit has been added to ensure that pins 18 and 19 of IC1 are always the complement of pins 18 and 19 of IC2. While IC1 is enabled, IC2 is disabled and vice versa. Only one of the 32 outputs of IC1 and IC2 are low; all remaining pins are high. The net effect of this circuit is to decode one of 32 outputs with 5 address lines. These 32 ouputs are now available for programming any 4-character sequence for the Selcal and any 7-character sequence for the W-R-U.

Sequence Detection

Now that the Baudot code has been decoded and there is a unique output port for each character, we must detect the sequence of these characters. In addition, if an incorrect character or sequence is detected, the entire sequence must be started again. This task is accomplished by IC6 and IC5. IC6 is a 74174 hex D-type flip-flop. This chip contains 6 flip-flops that will pass along the data on the input (D) to the output (Q) only on the positive-going edge of the clock pulse. The clock pulse is supplied by the data strobe output of the UART.

Let's go through an example to illustrate the sequence detection process. The sequence circuit starts with all inputs and outputs high. Pin 3 of IC6 goes low on the first character. The UART data strobe then clocks the flip-flops and this low state is transferred to the output, pin 2. This output is then ORed with the second character. Let us assume the second character is not part of the correct access code. Therefore, pin 12 of IC5 will be high, pin 11 will be high, and hence the output of the second flip-flop, pin 5, will remain high. More importantly, the entire sequence must be started over again since there is now a high state on pin 3 of

Binary Address			A_3	A_2	A_1	A_0	Low	Low	Character	
Bit Number	5	5	4	3	2	1	Pin	Pin		
IC1 Pin Number		18,19	20	21	22	23	of	of		
IC2 Pin Number	18,19		20	21	22	23	IC1	IC2		
	H	L	L	L	L	L	1		Blk	
	H	L	L	L	L	H	2		E	3
	H	L	L	L	H	L	3		LF	
	H	L	L	L	H	H	4		A	
	H	L	L	H	L	L	5		SP	
	H	L	L	H	L	H	6		S	
	H	L	L	H	H	L	7		I	8
IC1 ON	H	L	L	H	H	H	8		U	7
IC2 OFF	H	L	H	L	L	L	9		CR	
	H	L	H	L	L	H	10		D	
	H	L	H	L	H	L	11		R	4
	H	L	H	L	H	H	13		J	
	H	L	H	H	L	L	14		N	
	H	L	H	H	L	H	15		F	
	H	L	H	H	H	L	16		C	
	H	L	H	H	H	H	17		K	
	L	H	L	L	L	L		1	T	5
	L	H	L	L	L	H		2	Z	
	L	H	L	L	H	L		3	L	
	L	H	L	L	H	H		4	W	2
	L	H	L	H	L	L		5	H	
	L	H	L	H	L	H		6	Y	6
	L	H	L	H	H	L		7	P	0
IC1 OFF	L	H	L	H	H	H		8	Q	1
IC2 ON	L	H	H	L	L	L		9	O	9
	L	H	H	L	L	H		10	B	
	L	H	H	L	H	L		11	G	
	L	H	H	L	H	H		13	Fig	
	L	H	H	H	L	L		14	M	
	L	H	H	H	L	H		15	X	
	L	H	H	H	H	L		16	V	
	L	H	H	H	H	H		17	LTR	

Table 1. Baudot decoding chart.

IC6 and hence on its output. Now let us assume the second character coincides with the correct access code; pins 11, 12, and 13 of IC5 will all be low. This low is then passed on to the next OR gate. This process remains the same for the third and fourth characters. If the correct sequence is used, a low state finally appears at the fourth flip-flop, pin 10 of IC6. This low state is used to force the teleprinter motor on. If at any point an incorrect character is used, all outputs go high.

The W-R-U access code simply requires three additional characters to trip the W-R-U circuits. The detection of these characters occurs in a similar manner; however, an additional chip (IC7) is required.

NNNN Shutdown Detection

Now that we have turned on the teleprinter by using the correct access code, we must provide a means of turning it off. The customary code sequence to turn off the teleprinter is NNNN.

The heart of the NNNN shutdown circuit is a binary counter, IC3, a 7493. This chip simply counts the number of Ns. Pins 2 and 3 are enable pins that must be low for the chip to count. Since these pins are connected to the N output port of IC1, the chip is allowed to count only when an N is decoded. The input, pin 14, is connected to the UART data strobe. As seen from the timing chart, Fig. 3, a 2-microsecond pulse is generated by the UART for each and every character. However, the 7493 only counts Ns because it is disabled for all other characters.

IC4, a 7474, is a bistable latch that controls the teleprinter through relay K1. When the proper sequence has been detected by the Selcal sequence circuit, the output of IC4 is set, and when the NNNN shutdown code has been detected by IC3, the latch is, in essence, reset. Pins 10 and 13 of IC4 are used to externally force the motor on or off via the momentary switches.

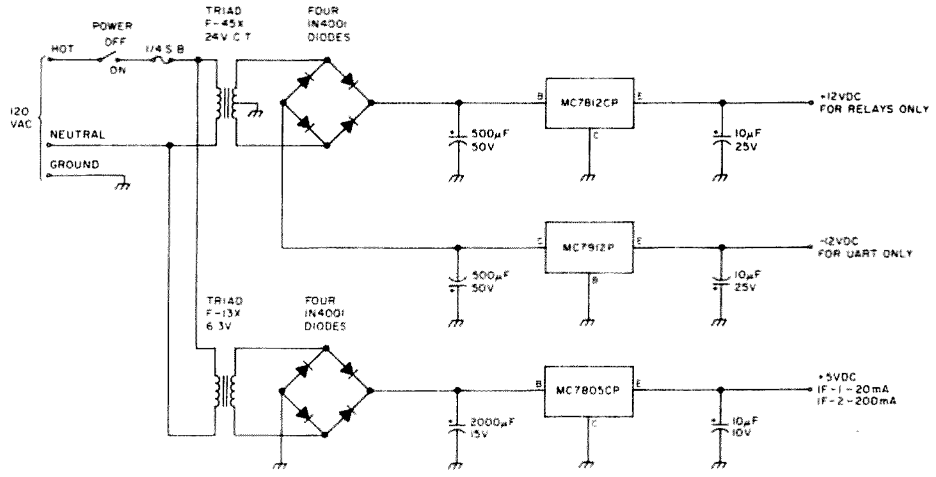

Fig. 4. Power supply.

Selcal Interfacing

The Selcal may be integrated into the RTTY station in several ways. Fig. 2 shows two Selcal interfacing schemes. Case 1 shows the teleprinter motor controlled directly by the Selcal. This is the easiest method, and for those without a demodulator with autostart, the only method.

Case 2 is a superior interfacing technique for several reasons. By controlling the ST-6 demodulator motor relay, we have, in essence, ANDed the autostart circuit in the demodulator with the Selcal circuit. This means not only must an authentic RTTY signal be present to trip the autostart circuit, but also the correct character sequence must be received. This means less of a chance of accidental turnons. More importantly, if the other station forgets to

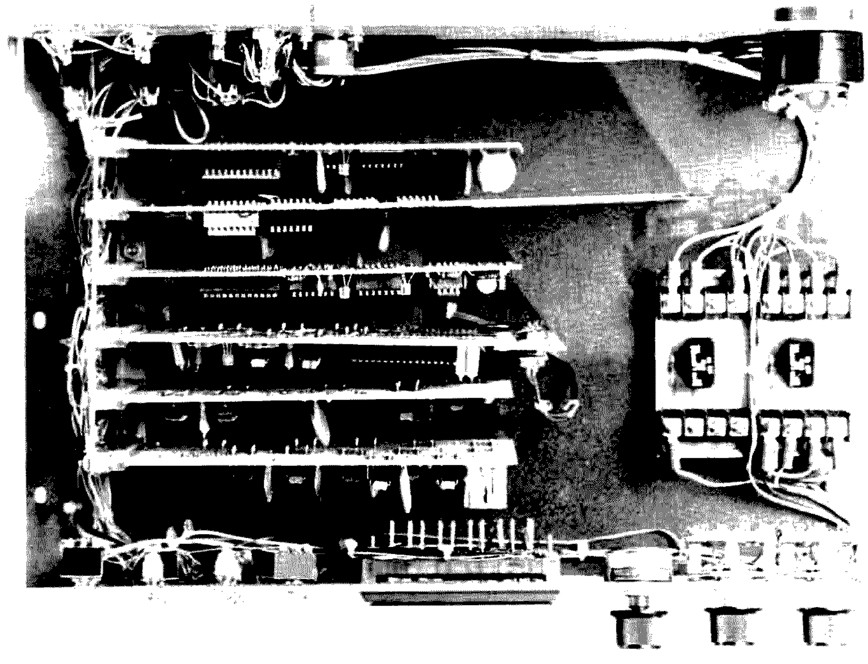

Photo 5. Top view of the UT-4 and IF-2 unit. Note the UART parallel data wires leaving the third board from the front. This is the board shown to the extreme right in Photo 3. These wires are terminated on the IF-2 board fourth from the front.

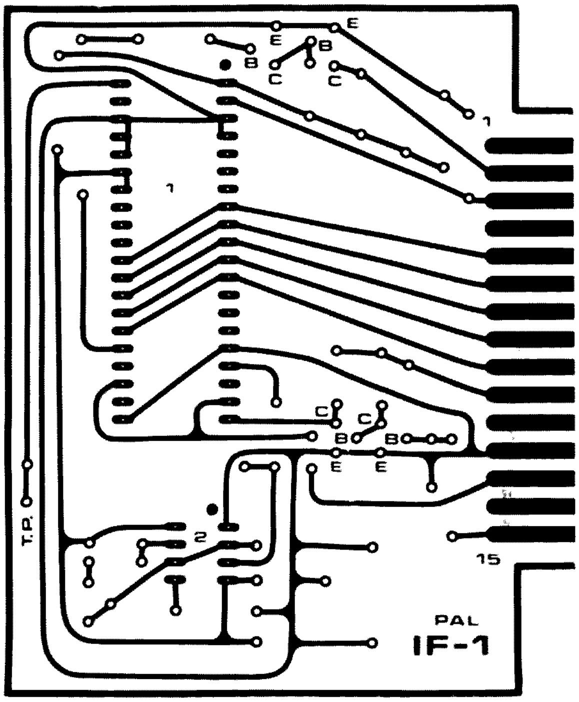

Fig. 5. IF-1 printed circuit board layout (full size).

send four Ns, the teleprinter will turn off when the RTTY signal ceases. Of course, you are now running simple autostart since the teleprinter will turn on now with any RTTY signal, but the next station sending the four Ns will reset the circuit. Another advantage of Case 2 is the fact that the motor relay of the ST-6 also controls the selector magnet loop current. Therefore, not only is the teleprinter's motor off, but also the 60 mA local loop current.

W-R-U Interfacing and Time Constant Calculations

Integrating an answerback system into a RTTY station is more complicated than interfacing the Selcal. The variety of ways is also greater. Fig. 2 shows three possible methods.

Let's start with Case 3 first. In this interfacing scheme, it is assumed the station has a message-generating unit and a CW ID unit. Now let us assume that the W-R-U message lasts 20 seconds, and the CW ID requires 10 seconds. This means the transmitter must be on for a total of 30 seconds to allow both the W-R-U message and CW ID to be broadcast. The "on" time of the transmitter is determined by the RC time constant of IC8. The time constant is given by approximately R x C. Since R is fixed at 1 meg for all timers (IC8, IC9, and IC10), the necessary capacitance for a 30-second time delay is 30 uF. Therefore, this means that when the W-R-U access code is received, relay K2 will be energized for an interval of 30 seconds. K2 is a two-pole relay that simultaneously controls the transmitter and message-generating unit in this case. Since K2 is actuated for 30 seconds, the transmitter will be on for this 30-second period. Relay K2 also enables the message generator for 30 seconds. Since the message is 20 seconds long, the message generator used in this case must be able to inhibit itself after the 20-second message is complete. After 20 seconds has elapsed, the message is finished and we will want to start the CW ID. The time before the CW ID starts is determined by IC9. Here the capacitance necessary for C2 is approximately 20 uF, giving a 20-second time delay. After IC9 has timed out, we want to start the CW ID. If you have an electronic CW ID unit, chances are a momentary closure of K3 will be satisfactory. Therefore, C3 may be 1 uF to give a 1-second contact closure. If your CW ID unit requires a closure of K3 for the entire 10-second duration of the CW ID transmission, C3 should be 10 uF.

Using the formula will only get you into the ball park. The actual capacitance values for C1, C2, and C3 will have to be determined through trial and error.

The Case 2 interfacing method assumes that a unit that sends a message followed immediately and automatically by a CW ID is used. This is the method I use and it works as follows. Let's assume the message and CW ID transmission require a total of 30 seconds.

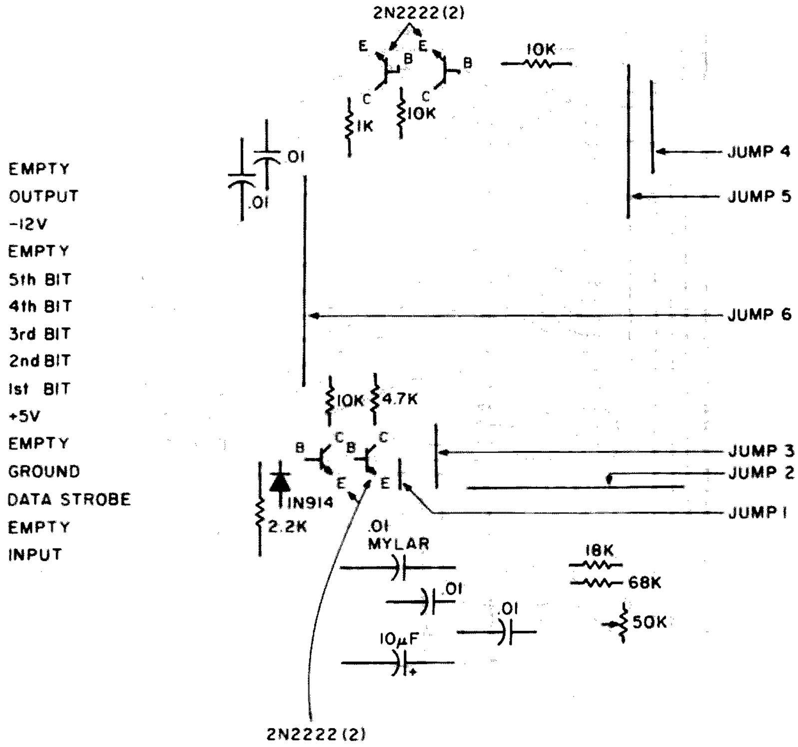

Fig. 6. IF-1 component placement.

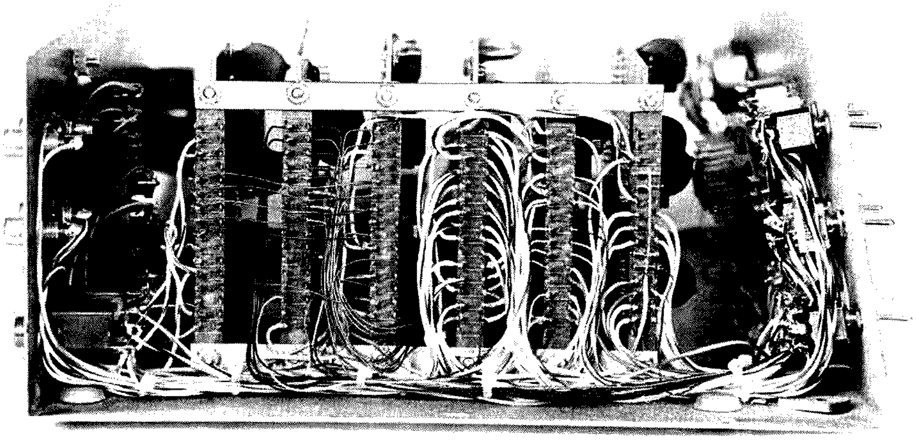

Photo 6. Side view of the IF-2 and UT-4 unit. Using this construction method to mount the edge card connectors is especially nice since it allows easy access to the connectors' pins.

Let us also assume that we do not want to start the message for 10 seconds. While this may seem strange, it is really a very nice feature. For with this method, the person receiving your message has a grace period of 10 seconds to turn switches and tune your signal in properly before the message and CW ID begins. This scheme requires the transmitter to be on for 40 seconds, the 10-second grace period plus the 30 seconds required for the message and CW ID. Therefore, C1 should be 40 uF. Since we want to pause for 10 seconds before starting the message and CW ID, we set C2 at 10 uF. Assuming the message and CW ID unit requires only a momentary contact closure to start the message and CW ID, C3 is set at 1 uF for a closure of relay K3 equal to 1 second. This interfacing method is also ideal for those amateurs with only a CW ID unit. For while it is nice to have a RTTY message followed by a CW ID, only the CW ID is legally necessary. Therefore, relay K3 may be used to simply start the CW ID.

The last interfacing scheme, Case 1, is for those fortunate RTTY enthusiasts with a UT-4. The actual time constants remain the same as in Cases 2 and 3, the only difference being in the circuit used to turn on the transmitter. Interfacing the W-R-U circuit with the UT-4 switch, S3, is shown in Case 1.

Power Supply

Fig. 4 shows a power sup-

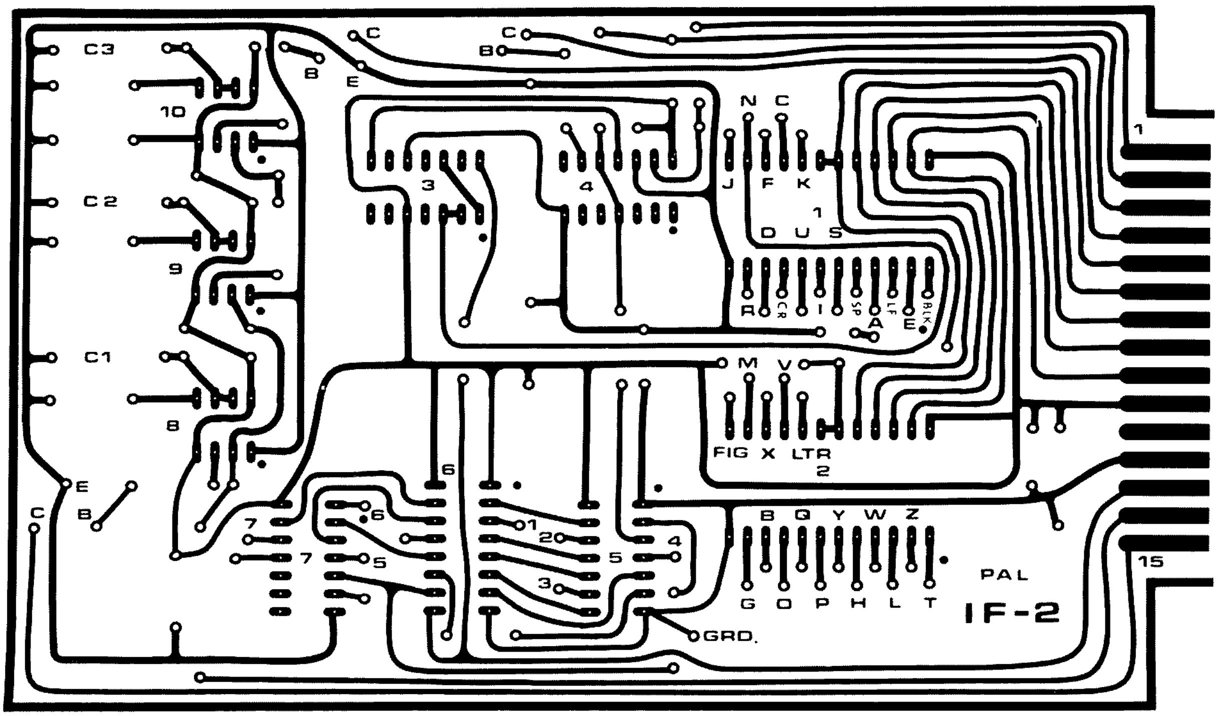

Fig. 7. IF-2 printed circuit board layout (full size).

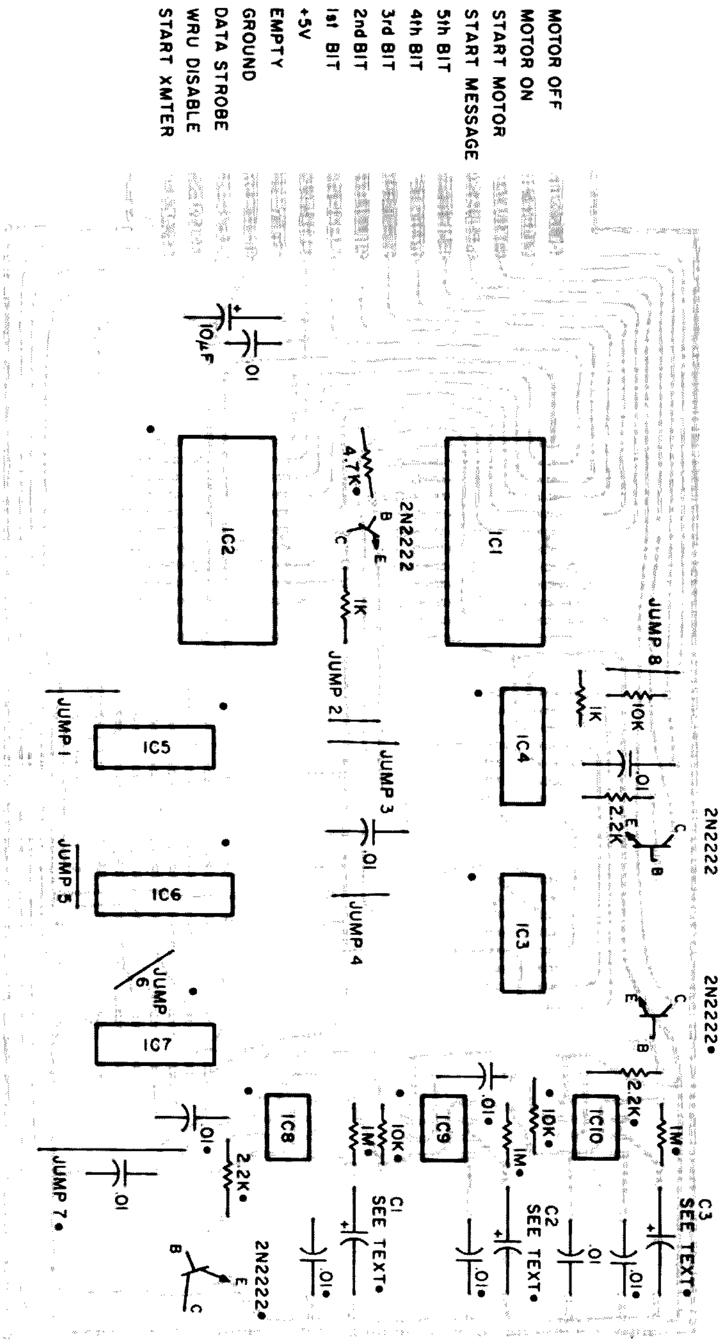

Fig. 8. IF-2 component placement. ICs 7, 8, 9, 10 and those components denoted by dots are not required if only a Selcal is desired.

ply schematic that will supply all the necessary voltages for this project. However, the entire supply may not be required. For example, if 12-volt relays are not used in your particular interfacing scheme, the +12-volt dc source is not required.

The UART is the only IC that requires the −12-volt dc source and the current drain is quite small. If you have an ST-6, the −12-volt supply of the ST-6 could easily handle this load.

The +5-volt supply is used by both the IF-1 and the IF-2 boards. The IF-1 circuit requires approximately 20 mA while the IF-2 circuit requires approximately 200 mA. Both current requirements can be easily handled by the +5-volt supply shown in Fig. 4.

Construction

Construction of the project is made quicker and easier by using printed circuit boards. The boards available from the author are professionally fabricated and drilled.

The IF-1 board requires six jumpers. Also note that the 4 transistors on this board will require the leads to be bent to conform to the PC board layout. The IF-2 board requires eight jumpers plus seven programming jumpers. The dot next to each integrated circuit on the board signifies pin 1 of each chip. The IC number is also on the board to help designate the proper location of each chip. The numbers 1 through 7 located near ICs 5, 6, and 7 represent one end of the program jumper wires. The other end of each of these wires is connected to the desired characters of IC1 and IC2.

If the builder wishes only to fabricate a Selcal without the W-R-U circuit, many components may be deleted. Fig. 8 indicates by dots those components that are not required for the W-R-U.

If you have a UT-4 and have used printed circuit boards for the project, you may be wondering how to pick off the necessary data points from the printed circuit board. Photographs 4, 5, and 6 show a UT-4 that has been interfaced to an IF-2. Note in particular Photo 5. This photograph shows at the extreme right a UT-4 board with the UART on it. In this case, an extension was added which contained a connector. The wires were then run from the connector to the necessary points on the UART.

Access Code Programming

The access code to trip the Selcal can be anywhere from one to four characters in length. While it is customary to use only the last three characters of a station's call, the exact number of characters will be a function of the letters. Certainly a station with the call W6AND would not

want to use only the last three characters (AND) since the word AND occurs frequently in English text. In this example, the Letters character would be added as a fourth character before the letter A to prevent premature turn-ons. While any character may be added, the Letters character is a natural since it would normally go after the number 6 and precede the letter A when the call is normally typed. Therefore, in this case, our four-character access code would be: Letters, A, N, and D. These four characters are programmed on the IF-2 board by four jumper wires. The first character, Letters, is programmed by connecting a wire from pin 3 of IC6 to pin 17 of IC2. The IF-2 printed circuit board has the number 1 next to pin 3 of IC6, indicating this is the first character to be programmed. Next to pin 17 of IC2, the abbreviation LTR is shown, indicating this to be the termination point if a Letters character is desired. In a similar manner, the second character A would be programmed by connecting a wire between pin 12 of IC5 (2nd character) and pin 4 of IC1 (A character). This procedure would be followed for the remaining characters N and D.

Now suppose your call is WA2ILP. The letters I, L, and P are not likely to occur consecutively in a normal conversation. Therefore, three characters should be adequate as an access code for the Selcal. Since there is a need for only three of four possible characters, the first character, pin 3 of IC6, is grounded. The characters I, L, and P then become the second, third, and fourth characters of the access code, respectively. The IF-2 printed circuit board has a hole marked GRD for the purpose of grounding the first character (pin 3 of IC6) should a three-character access code be desired.

For those with a two-letter call, you might find it necessary to use 4 characters for the access code. For example, in my call, W9IF, I use the following four-character access code: 9, Letters, I, and F. Referring to the Baudot code, you will see that the number 9 has the identical code as the letter O. Therefore, the first character (pin 3 of IC6) would be connected to the letter O (pin 9 of IC2). The remainder of the call would be programmed as previously discussed.

The access code to trip the answer-back system consists of a total of seven characters. The first four characters are the Selcal characters. Three additional characters, typically Figures, Blank, and H, make up the remainder of the access code. These three characters represent the 5th, 6th, and 7th characters of our access code. To program Figures as the 5th character, a wire is connected between pin 4 of IC7 and pin 13 of IC2. The 6th and 7th characters are programmed in a similar manner.

Other W-R-U access codes are Figures, Blank, and W, and, more recently, W, R, and U. The IF-2 printed circuit board gives the user complete flexibility in determining the answer-back access code.

In summary, a typical 4-character access code to turn on the teleprinter might be Letters, A, N, and D. The access code to trip the answer-back system for this station might then be the following seven characters: Letters, A, N, D, Figures, Blank, and H.

Conclusion

The Selcal and W-R-U answer-back system has been in operation for over two years now without any problems. When I recently received my two-letter call, reprogramming the access code required only a few minutes. The Selcal has enabled me to keep in contact with friends, and the W-R-U has given them the confidence to send a note knowing it will be received.

For those not familiar with some of the more popular autostart frequencies, they are as follows: on 80 meters, 3637.500 and 3617.500 kHz; and on 20 meters, 14,082.500 and 14,075.000 kHz.

I would like to thank Cal Sondgeroth W9ZTK for some design ideas, and Spence Clope W9LDH for fabricating a unit to confirm design validity. ■

References

Fehlauer, W., "What's a WRU?", *RTTY Journal*, July-August, 1976, p. 4.
Hoff, I. M., "The Mainline UT-4," *RTTY Journal*, February, March, April, May, 1974.
Lichtenwalner, B. D., "The Computer QSO Machine," *73*, January, 1976, p. 80.
Magee, J., "ZAP!", *Kilobaud*, February, 1977, p. 18.
Malanowicz, D., "Who Are You?", *RTTY Journal*, April, 1976, p. 3.
Sanders, L. W., "RTTY Autocall—the Digital Way," *73*, February, 1976, p. 76.
Sondgeroth, C., "An RTTY Selcal with TTL Logic," *73*, November, 1972, p. 20.

Printed Circuit Board Parts List

IF-1

Quantity	Description
1	AY-5-1013 (UART, IC1)
1	LM555 (timer, IC2)
1	1N914 diode
4	2N2222 transistor
1	1k ¼ W resistor
1	2.2k ¼ W resistor
1	4.7k ¼ W resistor
3	10k ¼ W resistor
1	18k ¼ W resistor
1	68k ¼ W resistor
1	50k potentiometer
1	.01 uF mylar capacitor (timing)
4	.01 uF ceramic capacitor
1	10 uF tantalum capacitor

IF-2 Selcal Only

2	74154 (4-line-to-16-line decoder, IC1, IC2)
1	7493 (binary counter, IC3)
1	7474 (4-bit bistable latch, IC4)
1	7432 (quad OR gate, IC5)
1	74174 (hex D-type flip-flops, IC6)
2	2N2222 transistor
2	1k ¼ W resistor
1	2.2k ¼ W resistor
1	4.7k ¼ W resistor
1	10k ¼ W resistor
5	.01 uF ceramic capacitor
1	10 uF tantalum capacitor

IF-2 with W-R-U

(The following additional components are required for the W-R-U option)

1	7432 (quad OR gate, IC7)
2	2N2222 transistor
2	2.2k ¼ W resistor
2	10k ¼ W resistor
3	1 meg ¼ W resistor
5	.01 uF ceramic capacitor
3	C1, C2, C3 tantalum capacitor (see text)

Professionally fabricated and drilled printed circuit boards are available from the author. IF-1: $12. IF-2: $15.

Richard T. McCartney W6GJS
10202 Stonybrook Drive
Huntington Beach CA 92646

Automatic Autopatch

—safeguard your health

The first thing that becomes apparent to an autopatch user is that dialing an 11-digit phone number while driving at 55 mph on a crowded freeway could be hazardous to your health. Add to that the three-to-six digit access code used by many machines and you start thinking that there has to be a better way. The answer, of course, is an automatic dialer, but the options are infinite and where do we begin?

The system described here was designed to be installed at the repeater site as an addition to the existing autopatch. This location gives several immediate advantages. First, there is space for a large-capacity memory. Second, you have an accurately adjusted tone encoder and are able to provide the signal-to-noise ratio required for high-speed, error-free dialing.

This dialer can store 100 phone numbers equally divided between 7 and 11 digits. The patch can be accessed and each number recalled using only a three-digit number sent from the mobile station. It has a temporary memory that will automatically redial the last number that was previously dialed in the conventional manner. And it has a ring-back answer function that allows a single digit to access the patch on call-in. The system reverts back to the more secure multidigit access code when the caller hangs up.

The heart of the dialer is the memory. It uses two Intel 1702A erasable, programmable, read only memories (EPROMs) that have a total capacity of 4096 bits of information. The phone numbers are programmed in BCD form using 4 bits per digit. A seven-digit number requires 28 bits plus a 4-bit stop code. So, at 32 bits per number, it is possible to store 128 seven-digit numbers. There is no restriction on the number of digits per number. You could program 0 for operator or any 3-digit phone company service number. If all your numbers were 11 digits, including an area code, your maximum capacity would be 85.

When used on a phone system with modern central office equipment, a seven-digit number can be dialed in less than 0.8 seconds, and that sure beats an operator trying to look up an emergency number that may be out of her local area. Yes, this dialer will wait for a valid dial tone before starting. A seven-segment LED readout displays the numbers as they are received as well as showing them as they are keyed out.

In the case of a small group of people on a private machine, each member could have his own piece of the memory for storing frequently-called numbers. For a large metropolitan open autopatch, public service numbers, such as police and fire department listings for each area covered, could be provided along with the time and weather reports, etc.

Before we get too involved with the circuit operation, perhaps we should define the inputs required to make the device work. They must be TTL compatible and preferably driven by a low-impedance buffer-type source. The first ten inputs are the individual digit lines from the TT decoder. They are normally high or at a "1" logic level. When a digit is received, that line goes low to a "0". The "main enable" line goes low whenever the control system has the repeater set for normal operation. The dialer is inhibited any time this line is high. The "conventional patch on" line goes low when the autopatch is accessed by the regular code for manual dialing. This again inhibits the dialer, preventing it from coming on the line should the first three digits of the phone number also be a valid autodial number.

The next input is a negative-going strobe pulse. The pulse width is not critical and may be anywhere from 50 µs to 1 ms. The strobe is generated each time a valid TT signal is received. It is usually delayed 30 to 50 ms to allow the decoders to settle and is then used to gate the digit lines on in various parts of the system. The "main off" signal is a pulse generated whenever the control system shuts the repeater down. The pulse width is not critical. It will immediately stop and reset the dialer. The "patch off" pulse is generated when the hang-up function is sent. It also stops and resets the dialer logic.

The "auxiliary reset" input is a pulse that is generated when any function command has been completed. It is used to reset counters, timers, and latches that may have been set as a result of an unrelated command. The "*" and "#" inputs are the same as the digit lines and go from high to low when activated.

Now let's see what happens when we send an autodial command to the system. Each telephone number stored in the memory has its own 3-digit address. The first digit selects the EPROM which has the number programmed. In this case, I have used the digit 3 to select EPROM #1 and the digit 4 to select EPROM #2. The next two digits of the command designate the address on that EPROM. There is a maximum of 64 address locations for each memory.

Assume that the number we want can be dialed with the command "435." The 4 appears as a high at gate U4-2C. FFs U4-4A and B are clear and, through U4-3C, present a high to the second

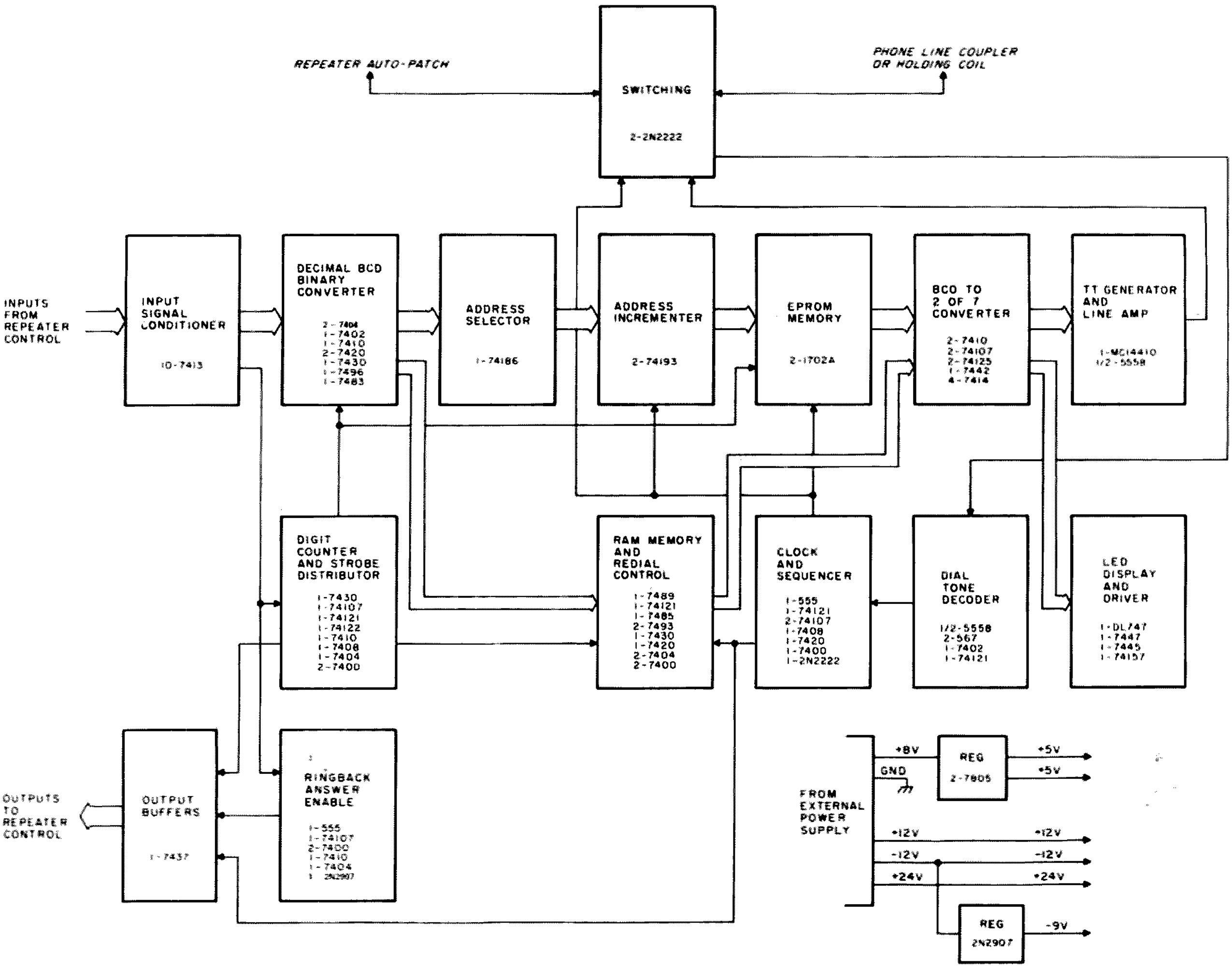

Fig. 1. Block diagram.

input of U4-2C. The strobe pulse accompanying the 4 is allowed to pass through gate U4-1 with all inputs high and is then passed through U4-2C, setting latch U4-5CD. It also increments the digit counter U4-4 one step and preclears the 7496 "tens latch" U2-8. The low from U4-5CD is used to enable EPROM #2, U3-5. The valid first digit (3 or 4) has enabled gate U4-9A, and, when the second digit is sent, it is stored in U2-8 by the second strobe pulse. The 3 is stored in the binary form of 30 and presented to the adder, U2-9. U4-9B is now enabled by the digit counter. When the third digit (5) is received, it is added to the 30 in U2-9 and sent to the address selector, U3-1, as a binary 35.

U3-1 is a 74186 programmable read only memory (PROM) that has been programmed with up to 64 out of a possible 256 address locations. This address is present at the inputs of U3-2 and U3-3 and is loaded by the third strobe pulse. The address location now stored is applied to the inputs of the EPROMs, U3-4 and U3-5, and designates the location of the first two digits in the phone number to be dialed.

The first toggle of the digit counter, U4-4, starts timer U4-7 (15 sec.). On arrival of the third valid digit, input B to SS U4-8 goes low and inhibits any output when U4-7 times out. However, if the counter is strobed by some nonvalid command or an incomplete dial command, the timer will trigger U4-8 in 15 seconds, generating a pulse that resets the flip-flops. Any other completed function command will generate an auxiliary reset pulse which immediately clears U4-7 and causes U4-8 to reset the circuits.

The trailing edge of the third strobe pulse toggles FF U5-7A, energizing the coil of K1 through Q1. U5-7A also generates three other commands which are sent to the autopatch control. The first, through U5-1A, prevents the conventional access code from turning on the patch. The second, through U5-1B, temporarily prevents any audio from being sent into the line. The third commands the patch to access the phone line through U5-1C.

The contacts of K1 transfer, connecting the line to the dial-tone detector through T1 and the normally closed contacts of K2. When dial tone is present, C57 is allowed to charge, and, in about 50 ms, the Schmitt trigger input B fires SS U7-6. The leading edge of the output pulse latches U7-5BC, energizing the coil of K2. 50 ms later, after the contacts of K2 have settled, the trailing edge toggles U8-4A, allowing the clock sequence to begin dialing. The phone line is now connected to the tone generator line amplifier.

U8-1 is the master clock and normally runs continuously at 40 Hz. U8-2 produces a clock pulse about 200 μs wide every 25 ms when it is enabled by a high from U8-4A. This clock pulse synchronizes the dialing operation as shown in the timing sequence chart, Fig. 4. Recall

Fig. 2. Schematic diagram.

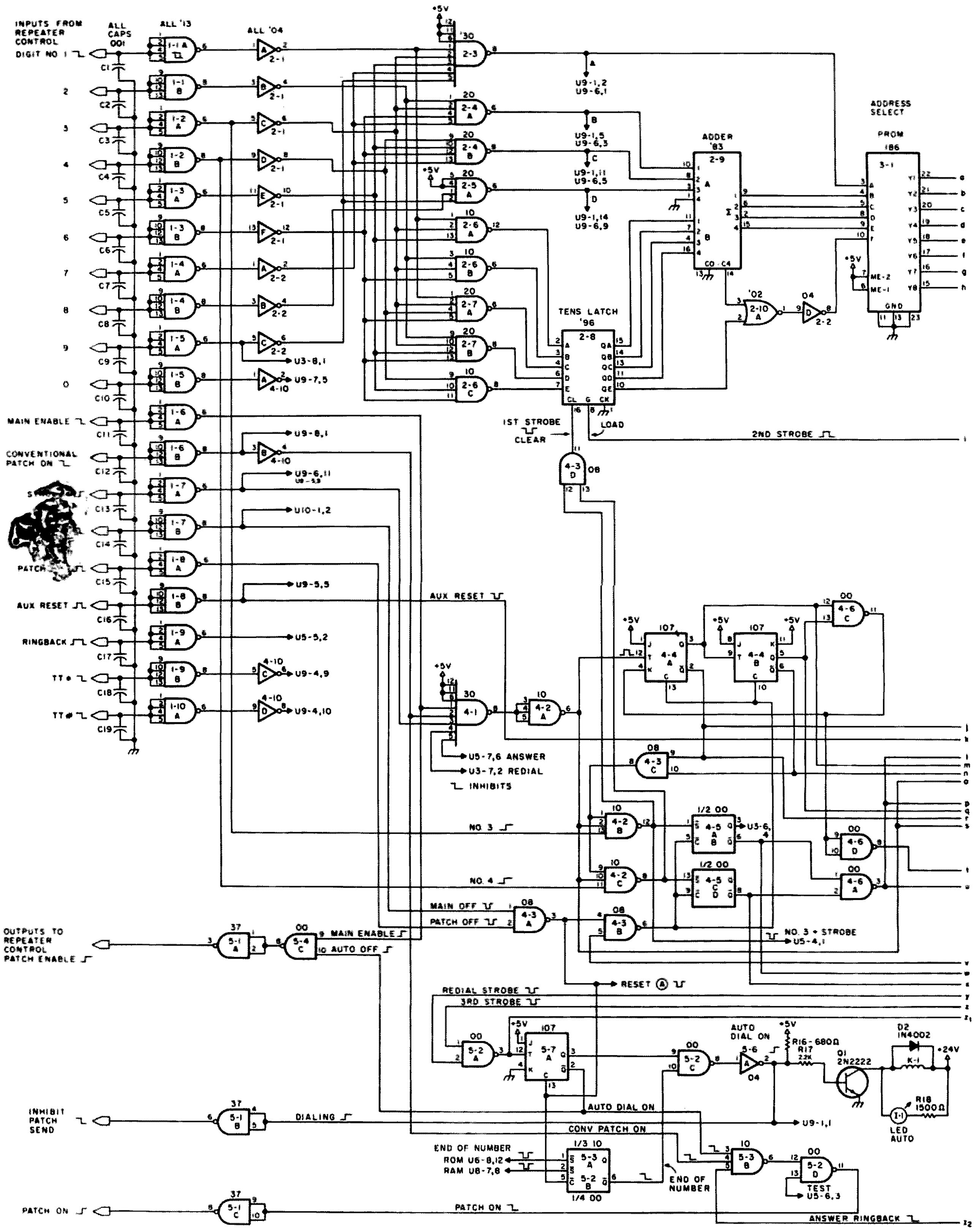

that we had selected an address on EPROM #2, U3-5, with the three-digit autodial number. This initial address supplied the first two digits of our phone number in the form of 8 bits of information or 2 x 4 BCD digits. When

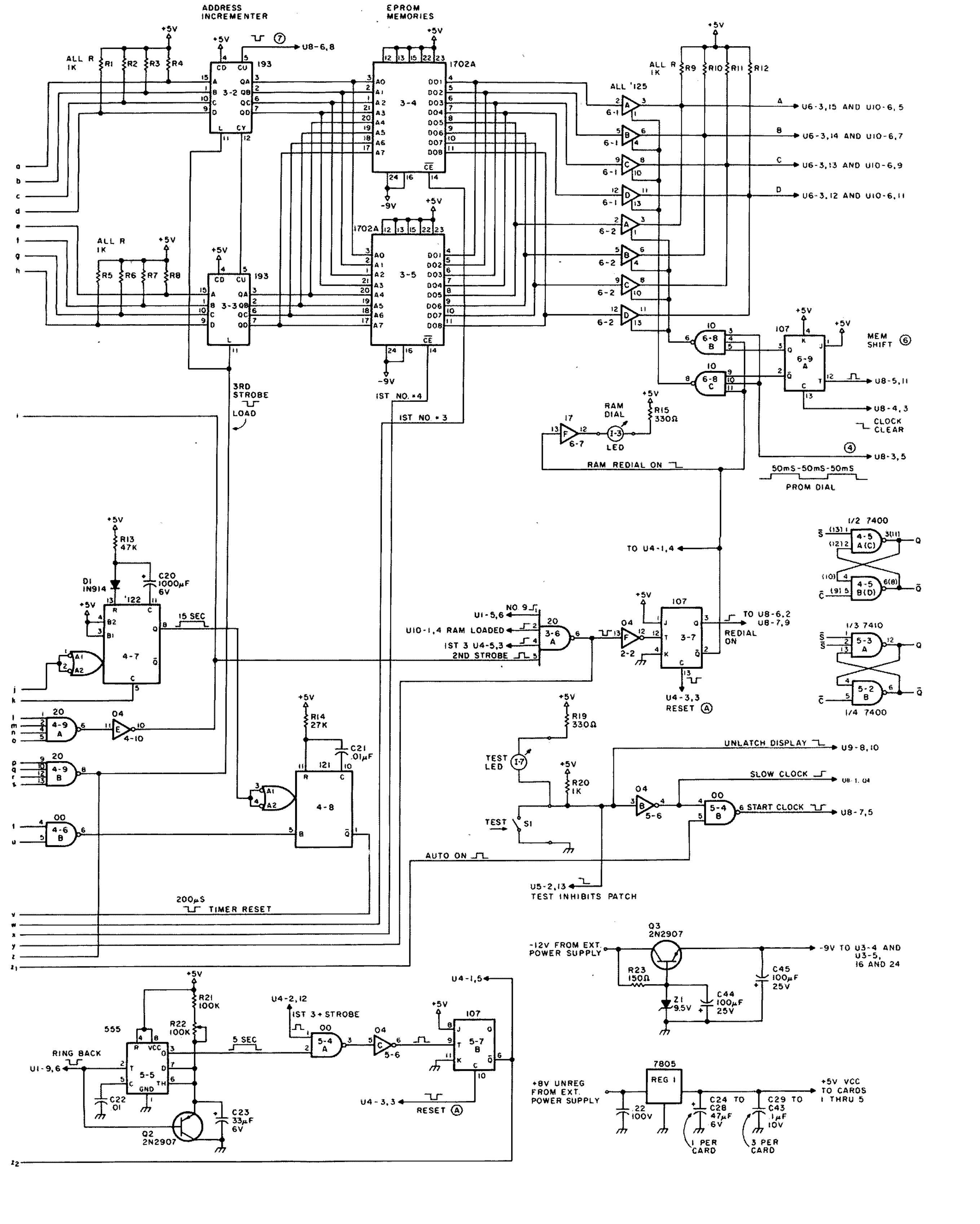

pulse [4] goes high, it is passed through U6-8C, enabling the first four tri-state buffers, U6-1ABCD, passing along the first 4 bits from U3-5 to U6-3. U6-3 converts the BCD information to decimal or 1 of 10 form and then to 2 of 7 TT format by the open-collector buffers U6-4A through U6-7B. The TT generator, U7-1, produces the appropriate tones as long as pulse [4] is high. Pulse [4] stays high for 50 ms and then goes low for another 50 ms. U6-3 produces no output during invalid BCD input codes, so, when all inputs are high (pulse [4] low), no

Fig. 3. Schematic diagram.

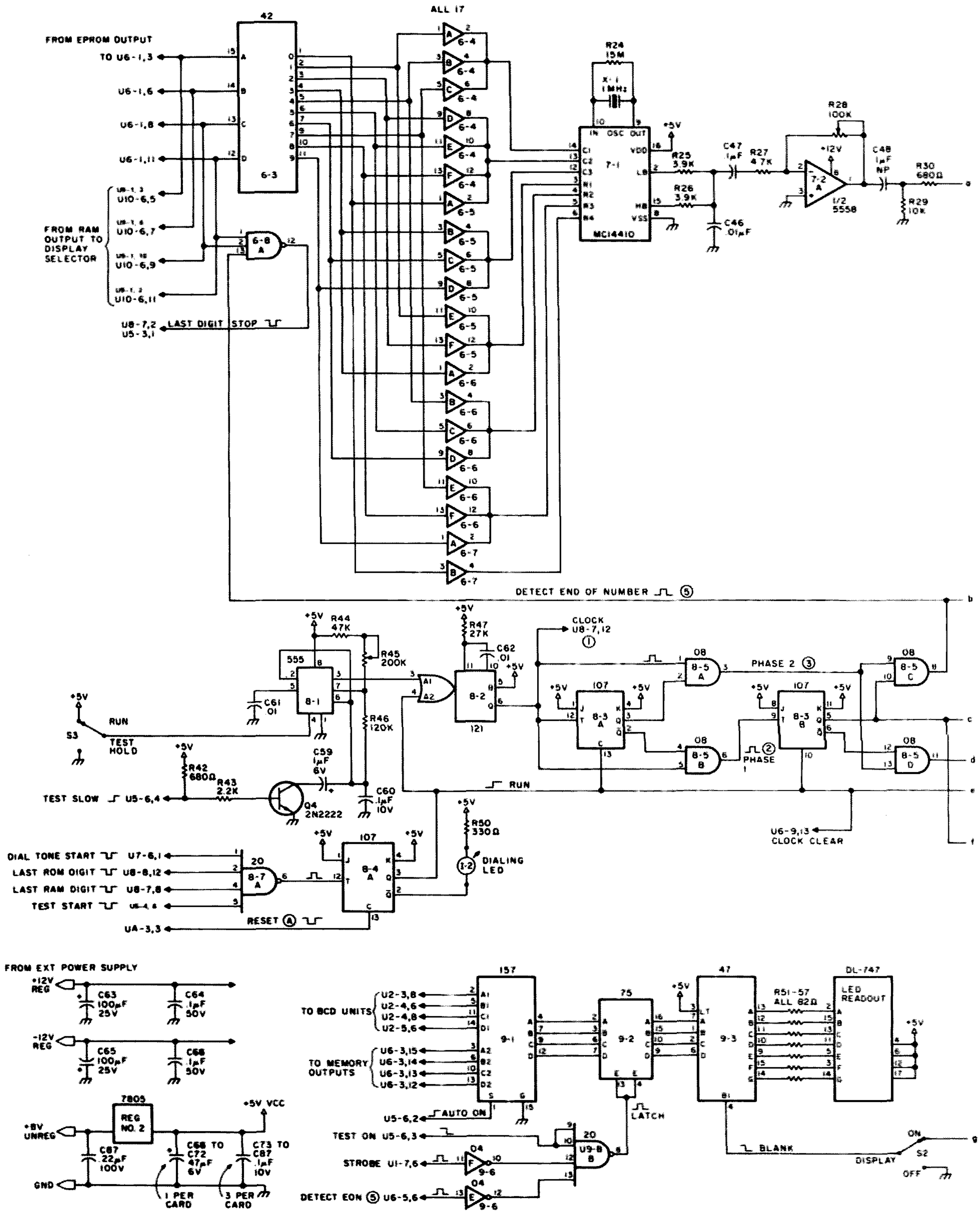

tones are sent. While [4] is low, pulse [6] toggles U6-9A, enabling gate U6-8B. The next high at [4] then enables the second four buffers, U6-2ABCD, picking up the remaining 4-bit code of the second digit.

After [4] has gone low for the second time, pulse [6] again toggles U6-9A, enabling U6-8C. This time pulse [7] is also generated, and it clocks U3-2, incrementing the address by one number. The dialing continues in this manner until all digits programmed have been sent and a stop code is detected. The stop code is programmed as a high on the C and D lines. In practice, I program all four lines high for easy visual recognition of the stop signal in the written program. In either case, this is an invalid BCD code and no tone is produced. However, U6-8A

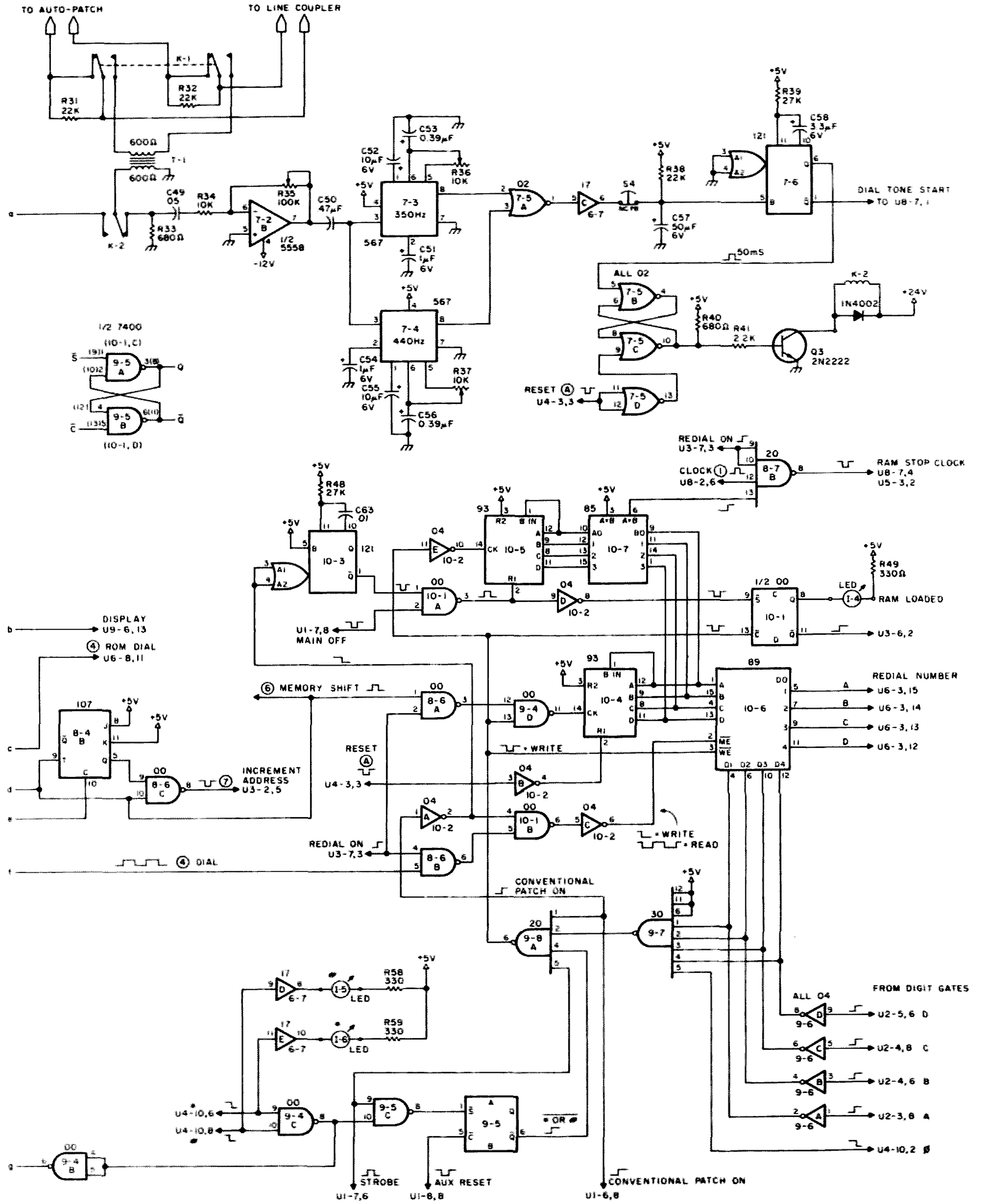

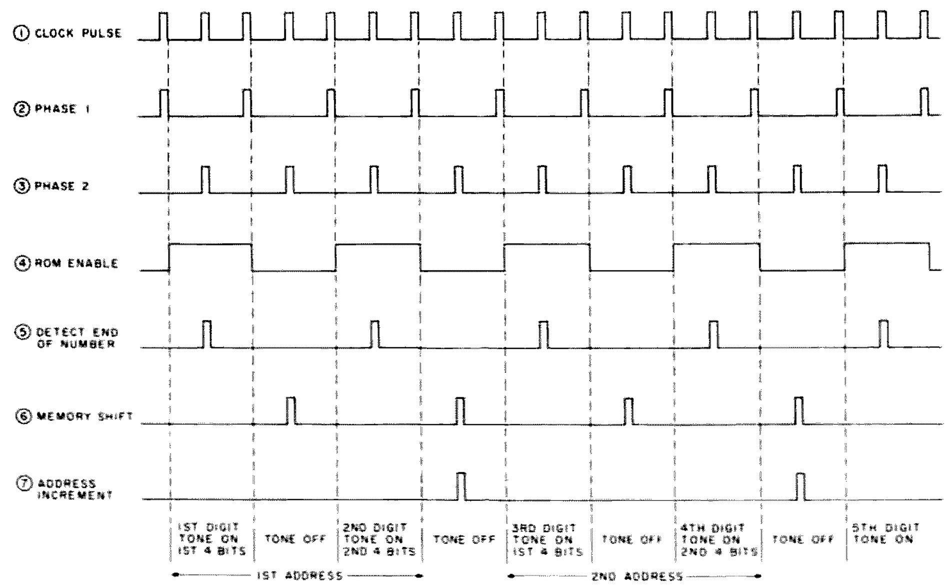

Fig. 4. Automatic dialer timing sequence chart.

sees the C and D lines high, and, when pulse [5] comes along, it is passed to toggle U8-4A. The low output from U8-4A now inhibits U8-2 and clears all the other flip-flops in the clock. The stop pulse from U6-8A is also sent to latch U5-3A, releasing K1. This transfers the phone line back to the autopatch. At the same time, the inhibit is removed from the patch-send circuit at U5-1B. R31 and R32, at K1, allow some sidetone to reach the patch during the dialing sequence.

At the end of the conversation, the hang-up command is sent and reset pulse [A] is generated at gate U4-3A. This pulse clears all flip-flops not already reset. It causes the patch to be disconnected through U5-1C and releases K2 at U7-5D. As noted before, the patch off (hang-up) or main off commands can be sent at any time during the sequence. Either one produces a reset [A] pulse which immediately clears the dialer and releases the phone line.

We will talk about writing the program for the memories later, and, while it may seem difficult at first glance, it is really very simple, albeit repetitious. The mechanics of electrically programming the 74186 PROM have been well documented[1] and can be easily done by yourself. Its program is permanent and does not have to be changed. The 1702A EPROMs can be erased and reprogrammed any time you wish. They contain the actual phone numbers and can be updated from time to time as your requirements change. However, these memories require sophisticated programming techniques and are best done on a special machine. Your local hobby computer store should be able to handle this for you or direct you to someone who can. Some mail-order firms advertise programming for these chips at a reasonable price.

The test switch, S1, allows verification of correct programming without actually calling all the numbers on the phone. The three-digit address code is sent through the control system as if you were going to place a call; however, S1, when in the test position, prevents the autopatch from accessing the phone line. U5-4B is enabled and starts the clock without waiting for dial tone. The clock is slowed to 1/10th speed by Q4, C59, and the display is switched to nonstore operation. As the number is dialed, it is read out on the display with each digit illuminated in sequence slow enough to follow on a checklist. When the dialer is not running, U9-1 switches the display to read the digits as they are received from the mobile units. The display is blanked and individual LEDs indicate when a "*" or "#" is received.

U10-6 is a 7489 random access memory, or RAM for short. A RAM is sometimes referred to as a scratchpad, and that's what we use it for in the automatic redial circuit. As long as we have a control system, a clock/synchronizer, and a tone generator, it is only natural that we add a temporary memory for recalling those numbers that were originally dialed in the conventional manner. Such a feature could come in very handy if your local pizza parlor is not one of those numbers programmed and always seems to be busy whenever you call.

U10-6 will store up to 15 digits. It is enabled whenever the autopatch is accessed by the regular code for manual dialing. As the mobile is transmitting the tones to the phone company, they are also decoded in the local system and converted to BCD form at gates U2-3, 4, and 5A. These lines ultimately reach the data inputs of U10-6, and the information on them is stored with each strobe pulse.

While the RAM is loaded with the leading edge of the strobe, the trailing edge of the same pulse clocks counters U10-4 and U10-5. This increments the address to both U10-6 and the 7485 4-bit comparator, U10-7. Each digit increments the counters one step until the dialing is completed and the numbers are stored. The first strobe of the sequence latches U10-1CD, indicating that some number has been stored in the RAM.

The next command will probably be the hang-up or patch-off function from the mobile. This generates a reset [A] pulse which is sent to U10-4, causing the counter to reset to 0, the first address location. The phone line is released by U5-7A, as previously described. Note that counter U10-5 still retains the number-of-digits-dialed information. This phone number can now be redialed by sending only two digits, a 3 and a 9. The 3, as a first digit, is identified by U4-2B and sets latch U4-5AB. The high from U4-5AB is sent to gate U3-6A along with the "RAM-is-loaded" high from U10-1CD. The 9 then arrives at U3-6A from U1-5A accompanied by the second strobe from U4-10E. The strobe is passed through U3-6A to toggle U3-7. It is also sent to U5-2A where it initiates the same sequence described earlier when the 3rd strobe toggles FF U5-7A and accesses the phone line.

The low from U3-7 inhibits any further strobe pulses at U4-1 as well as inhibiting the EPROM dial pulse [4] at U6-8B and C. An LED, I-3, indicates that the RAM is dialing. The high from U3-7 enables the clock gates, U8-6A and B. The open-collector data output lines of the RAM, U10-6, are connected "wired-or" with the outputs of the tri-state

Address code (2-digit suffix)	74186 PROM Address inputs	74186 PROM Data outputs (y)	1702A EPROMs Address input lines (both EPROMs)	#1 Data out lines (300 code prefix)	#2 Data out lines (400 code prefix)
	FEDCBA	87654321	76543210	87654321	87654321
				Tel.# (853-1212)	Tel.# (555-1234)
00	000000	00000000	00000000	01011000	01010101
			00000001	00010011	00010101
			00000010	00010010	00110010
			00000011	11110010	11110100
				(244-8101)	(547-8311)
01	000001	00000100	00000100	01000010	01000101
			00000101	10000100	10000111
			00000110	00000001	00010011
			00000111	11110001	11110001
				(1-800-123-4567)	(1-213-456-7890)
02	000010	00001000	00001000	10000001	00100001
			00001001	00000000	00110001
			00001010	00100001	01010100
			00001011	01000011	01110110
			00001100	01100101	10011000
			00001101	11110111	11110000
				(411)	(611)
03	000011	00001110	00001110	00010100	00010110
			00001111	11110001	11110001

Fig. 5(a). Sample program.

buffers, U6-1 and 2, and sent to the inputs of U6-3.

As soon as dial tone is detected, the clock starts, and pulse [4], through U8-6B, reads out the number stored in the first address location. It is encoded at U7-1 and transmitted down the phone line. When pulse [4] goes low, U10-6 is inhibited, and pulse [6] then clocks counter U10-4, through U8-6A, incrementing the address to the location of the second stored digit. Pulse [4] goes high again, sending out the second digit. This sequence continues until the number of digits dialed now equals the number of digits that were dialed originally. We remember that the original-number-of-digits information remained in counter U10-5, which feeds the A inputs of comparator U10-7. The number of digits dialed now, as counted by U10-4, are fed to the B inputs of U10-7. When A = B, a high is produced by U10-7 and sent to U8-7B. With all inputs enabled, the next clock pulse [1] is passed through U8-7B to U8-7A, stopping the clock. It is also sent to U5-3A, transferring the phone line to the autopatch.

The number can be redialed as often as desired. Any of the preprogrammed numbers can be called without disturbing the number in the RAM. The number will be erased whenever the main off function is commanded. The pulse from U1-7B clears U10-5 and sets latch U10-1CD. The same thing happens if the autopatch is again commanded on by the conventional access code, thus clearing the way for the new number to be stored. Each time the conventional patch is functioned on, the low at U10-3 produces a pulse, resetting U10-5 and U10-1CD.

Many systems use an "*" or "#" preceding any command that may be required while a phone call is in progress. This prevents an inadvertent command from being functioned during the dialing should the phone number coincidentally contain a valid function code. The latch U9-5AB implements this logic by inhibiting gate U9-8A whenever an "*" or "#" is received. The strobe is not allowed to enable the memory or counters during an "*" or "#" because U9-7 does not see them as a valid digit, thereby inhibiting U9-8A. When U9-5AB goes low, any subsequent digit will not be stored. Only after the command has been completed will an auxiliary reset pulse be generated in the repeater control clearing latch U9-5AB.

The ring-back answer circuit could be part of the repeater control system, and, if you are still answering your autopatch with a multidigit code, this is for you. How many times have several stations tried to answer the phone simultaneously, locking up the function de-

Dial	EPROM #1		Dial	EPROM #2	
300	Tel.# 853-1212		400	Tel.# 555-1234	
	5	8		5	5
	1	3		1	5
	1	2		3	2
	stop	2		stop	4
301	244-8101		401	547-8311	
	4	2		4	5
	8	4		8	7
	0	1		1	3
	stop	1		stop	1
302	1-800-123-4567		402	1-213-456-7890	
	8	1		2	1
	0	0		3	1
	2	1		5	4
	4	3		7	6
	6	5		9	8
	stop	7		stop	0
303	411		403	611	
	1	4		1	6
	stop	1		stop	1

Fig. 5(b). Sample program sequence. Numbers with adjacent addresses should be the same length for maximum use of available space in the memory.

Decimal	Binary	BCD	Hexadecimal
0	0000	0000	0
1	0001	0001	1
2	0010	0010	2
3	0011	0011	3
4	0100	0100	4
5	0101	0101	5
6	0110	0110	6
7	0111	0111	7
8	1000	1000	8
9	1001	1001	9
10	1010		A
11	1011		B
12	1100		C
13	1101		D
14	1110		E
15	1111		F

Fig. 6(a). Code forms.

coder? This system allows the single digit 3 to answer the phone, but requires that the complete multidigit code be sent to access the line for manual dialing. We are not too concerned that some unauthorized person may access the system with an autodial code because only the numbers preprogrammed can be called.

When an incoming call is received, the ring signal is detected in the repeater control and sent as a TTL high to U1-9A. The signal lasts from 2 to 4 seconds with an interval between rings of about 4 seconds. The initial ring triggers timer U5-5, which produces a high output for 5 seconds. The second ring comes before U5-5 times out, causing Q2 to discharge the timing capacitor C23. At the end of the ring, C23 again starts another timing cycle. The output of U5-5 stays high, enabling one input of U5-4A until 5 seconds after the last ring. The first strobe from the digit 3 received while the gate is enabled is passed through from U4-2B, toggling U5-7B. The low output from U5-7B causes U5-1C to access the patch and answer the phone. This low also inhibits U4-1, preventing any more strobes from coming through. When the patch off command is sent, reset [A] pulse clears U5-7B, hanging up the phone.

Construction is straightforward, and no special techniques are required. I divided my circuit onto ten plug-in boards as indicated by the U1 to 10 prefixes. However, the logic elements don't care where they are located as long as they are connected properly. My unit was built as a separate rack-mounted cabinet. Many machines have very sophisticated and expandable control systems, and a dialer such as this might conveniently slip into some spare slots in an existing card rack. The input signal conditioners, 7413 Schmitt triggers U1 through U10, could be eliminated if the dialer were made an integral part of the control system using short interconnecting leads. Invert the logic someplace to compensate for the removal of the 7413s.

Troubleshooting and adjusting this system are made somewhat easier by several built-in test functions. The front panel test switch, S1, has been discussed and allows observation of rapid sequences by slowing the clock. S3, which is mounted on the clock circuit board, can stop the sequence at any point for more detailed inspection. S4, on the dial-tone detector, will simulate a dial-tone start while testing on the bench.

The dialing speed is set by R45 at the master clock. A clock frequency of 40 Hz at U8-1 generates a 50 ms tone burst with an interval of 50 ms. Most modern central offices will handle this speed. Some older phone systems may not operate this fast, so you would have to experiment with the speed. R36 and R37 set the frequency of the dial-tone decoders. Note that not all systems use 350 and 440 Hz tones. Check that out and set the decoders accordingly. R35 sets the dial-tone level at the decoder inputs. It should be between 100 and 200 mV. R28 sets the output level of the tone generator. Adjust it to produce a -1 dBm level as measured across the phone line.

So much for the hardware. New let's look at the software or programming. The first step is to assemble the list of phone numbers and determine how many bits will be required to store them. We know that there are 2048 bits available on each 1702A EPROM, and we know that each number is going to require 4 bits per digit plus a 4-bit stop code. When the number of bits required is equal to or slightly less than the number available, we can proceed.

The program for the EPROMs is written first. Indicate the logic levels, in the form of a 1 or 0, for each of the eight data output lines at each of the 256 address locations. Refer to Fig. 5(a). Note that, in the "EPROM address input lines" column, the address is in 8-bit binary form, with the least significant bit at the right. The next column to the right is the 8-bit data output of EPROM #1. The first two digits of the first phone number are programmed here in binary-coded decimal form. The first digit uses the four right-hand places with the least significant bit on the right. The third and fourth digits are programmed in the same manner in the next address location, and so on until all the digits have been programmed. The stop code is four 1s added after the last digit. In the next column to the right, we have the data output lines for EPROM #2. The address for each location is the same as that for EPROM #1. Fig. 5(b) shows the sequence of the digits in the program.

As I said before, there is no restriction on the number of digits that can be programmed as one phone number. Because there are two memories using the same address system, each number must begin at the same address location on each EPROM. In other words, if a number starts at the 44th address on EPROM #1, there must be a number in EPROM

Code suffix	EPROM address	EPROM 1 data	EPROM 2 data
00	00	58	55
	01	13	15
	02	12	32
	03	F2	F4
01	04	42	45
	05	84	87
	06	01	13
	07	F1	F1
02	08	81	21
	09	00	31
	0A	21	54
	0B	43	76
	0C	65	98
	0D	F7	F0
03	0E	14	16
	0F	F1	F1

Fig. 6(b). Hexadecimal conversion of sample program. With a little practice, it is possible to program directly from the phone number to hexadecimal. However, steps in Fig. 5(a) give a better picture of what's happening to your program.

#2 starting at the same address. Therefore, to make the maximum use of the available space, each adjacent number sharing the same beginning address should have the same number of digits. To simplify any future reprogramming, group all equal-length numbers together.

Now let's move left on Fig. 5(a) to the 74186 PROM. Note that we only have to program the outputs for the start address for each number. Once that address has been loaded in the 74193 counters, U3-2 and U3-3, the address to the EPROMs is incremented by the clock. There will be a maximum of 64 addresses to program on this chip, depending on the length of the phone numbers. This program should never have to be changed.

There is just one more thing to do before you send the EPROMs out for programming. The firm doing the programming will probably require that your information be in either octal or hexadecimal form. I would recommend using hexadecimal if you have an option, as an 8-bit binary number can be reduced to just two places. See Fig. 6(a).[2]

In conclusion, let me point out something that may have been obvious since you first looked at the diagrams. If you think you might require additional memory, all you have to do is add some more 1702As in parallel with the existing chips, pin for pin, and provide the first digit gates to enable them. You could get as much as 5 times the capacity — but then think of all that programming! ■

References

1. William J. Hosking W7JSW, "K2OAW Synthesizer Promoted," *73*, Nov./Dec., 1975, p. 138.
2. Rony Larson, *Bugbook I*, pages 5-9.

New Products

from page 242

presses the pins to proper .600-inch spacing and locks the IC into the tool. Then the tool is placed on the socket and the plunger depressed for instant and accurate insertion. The MOS-40 features heavy chrome plating throughout, for reliable static dissipation, and includes a terminal lug for the attachment of a ground strap. This IC insertion tool is available from your local electronics distributor or directly from *OK Machine and Tool Corporation, 3455 Conner Street, Bronx NY 10475.*

WIRE-WRAPPING WIRE

Fine industrial-quality AWG #30 wire-wrapping wire is now available on compact, convenient 50' rolls. Perfect for small production applications, prototype jobs, or amateur electronics projects, the wire is silver-plated OFHC copper with Kynar insulation. This insulation combines excellent electrical and mechanical characteristics with easy stripability, is available in 4 colors (red, white, blue, and yellow), and is packaged on 1-5/8"-diameter spools for easy handling and storage. This wire is available from your local electronics store or directly from *OK Machine and Tool Corporation, 3455 Conner Street, Bronx NY 10475.*

THE UDM THRUSTOR

If you know the value of a thrust bearing in taking the weight off your rotator, and if you use a TV tower antenna support, then you'll love the UDM THRUSTOR™. It's built by an amateur for those who can't afford expensive towers and rotators but nonetheless desire a top-notch antenna installation.

Utilizing a high-quality, precision-ground, hardened-race, ball-type thrust bearing, the UDM THRUSTOR will easily support the largest of arrays. Installation is simplicity itself. Merely slip the whole unit over the top of any standard TV tower top section. Install the mast pipe (up to 1¾" o.d.), lift the weight off your rotor, and tighten the four 5/16" cadmium-plated bolts. A bead of caulking between the collar and the mast pipe will seal out the weather. Constructed of 100% steel parts, it is truly made to last a lifetime. Now there is no excuse to make that rotor support the weight. *UDM Enterprises, PO Box 2037, Sandusky OH 44870.*

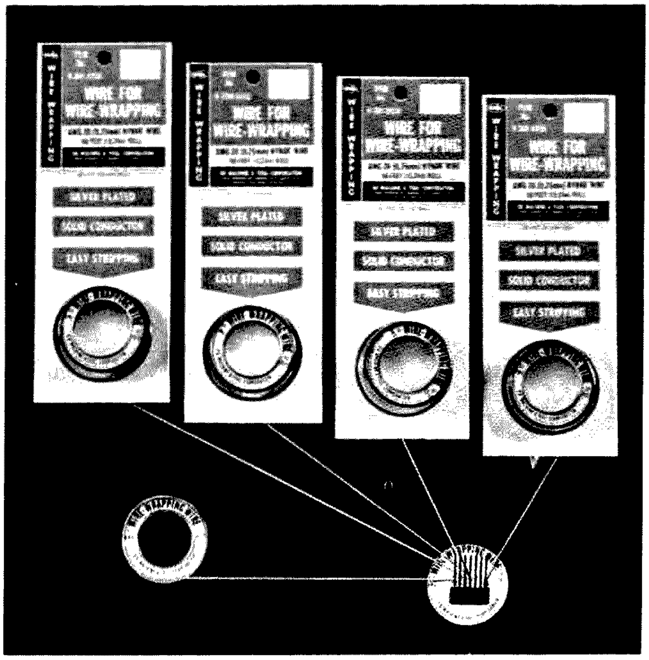

Wire-wrapping wire from OK Machine and Tool.

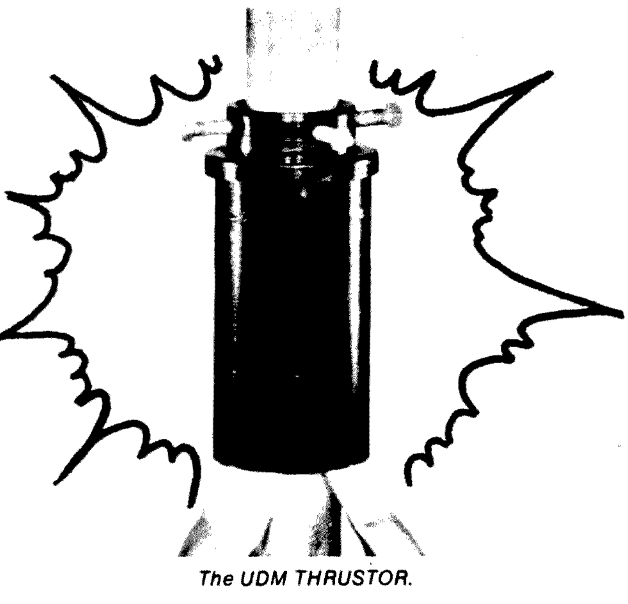
The UDM THRUSTOR.

Corrections

Please note a correction to my article "Low-Pass Filter Primer," which appeared in your October issue. On page 99, line 33, column 1, should more properly read: "$\zeta = 1/(2Q)$ gives the damp-".

Peter Stark K2OAW
Mt. Kisco NY

Yes, we know that the duotone on page 221 of our October issue is upside down. We will pass the buck along simply by saying that the mistake was not made by a member of the *73* staff.

John C. Burnett
Managing Editor

Using Bargain Muffin Fans

—a keep-cool idea

Robert M. May II K4SE
PO Box 30
Jonesboro TN 37659

Have you ever spotted "bargain-priced" muffin fans at a hamfest, rushed over to snap one up, and put it down just as quickly because it was built to operate on 208-240 volts ac? I don't know how many of these "dollar beauties" I've turned down, but when I found one for a quarter, I just couldn't pass it up. (It'll look pretty on top of the bookcase?) I took the thing home and hooked it up to 120 volts ac. It did turn, but not very fast, and sometimes it wouldn't start. It just so happens that I have one of those 0 to 140-volt Variacs, and I tried the fan at 140 volts. Not only did it start right up, but it ran at a very respectable speed!

I have one of those Heathkit® "kompact kilowatt" amplifiers that gets as hot as a firecracker since it has no forced-air cooling. So, I thought I would mount the fan on top of the cabinet and pull air across the final tubes. This worked great, except when I needed the Variac out in the shop (it's great for varying the speed of a drill). What I needed was a permanently installed transformer of some sort to stay with the fan all the time. Unfortunately, I was fresh out of 120/240-volt transformers or anything similar. However, I did have a 120/25-volt 500-mA transformer I had bought from McGee Electronics for 79¢. You might wonder how that would be of any help. Well, a Variac is a variable *autotransformer*. Why not hook up the 120/25-volt transformer as an autotransformer and get 120 plus 25, or 145 volts ac? This is done by hooking one side of the secondary winding to one side of the primary and then connecting the load to the other primary and secondary windings (See Fig. 1). Be sure the windings are connected in phase. This is determined by a 145-volt ac voltmeter measurement across wires A and B. If the windings are wired out of phase, the voltmeter will read 120 minus 25, or 95 volts. This autotransformer connection turned out to be the perfect solution for keeping the linear cool during those DX pileups!

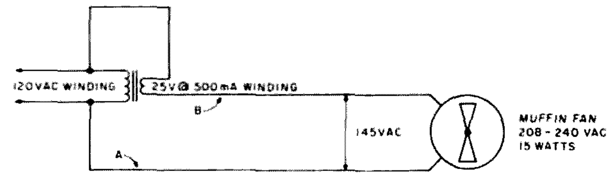

Fig. 1. Muffin fan wiring arrangement.

Now, those of you with sharp eyes have seen that the muffin fan specifications show its power rating to be 15 Watts at 208-240 volts (from Fig. 1). And, knowing that P = E × I, you have determined that the little transformer is capable of delivering only 25 × 0.5 or 12½ Watts in the normal mode. However, remember we are using the secondary winding to *add* voltage on top of the 120 volts ac already available from the line for a total of 145 volts. Since the secondary can deliver 500 mA (or 0.5A), we can pull that much current from the line to a load as well, without overtaxing the transformer. Therefore, the total amount of power that can be delivered by our circuit is 145 volts x 0.5 Amps or 72.5 Watts.

A word of caution! *Do not* use an autotransformer for high-voltage plate circuits or any kind of circuit which must be isolated from the line. The resultant "hot" chassis could make your wife a widow in a hurry! ■

Philip L. Smith WA4EID
2209A Park Ave.
Richmond VA 23220

Loran-C as a Frequency Standard

—*is 3 cycles a week good enough?*

Do you operate near the band edge? Do you have trouble calling up that favorite two meter repeater? How accurate is your frequency counter? These questions illustrate one of the most pressing needs among amateurs today: accurate frequency-measuring techniques.

While working as an aircraft radio technician, I encountered a peculiar, though perhaps common, problem. The shop housed seven expensive and presumably accurate frequency counters, yet each counter differed from the others by at least one kilohertz over a span of seven kHz in the VHF aircraft band. This situation had to be resolved, so the options were considered:

1. Guess which instrument is most accurate and set the others to match. This approach easily results in a pink ticket from Uncle Sam.

2. Send the offending instrument(s) to the manufacturer for calibration. This sounds good but it is expensive and time-consuming, and there is a hitch: The instrument will presumably be accurate when it leaves the calibration facility, but will its accuracy be maintained after bouncing across the country or freezing to thirty below in the cargo hold of an airliner?

3. The signals from WWV or CHU can be used for calibration. This method is fraught with difficulties. The signals are only available at certain times of the day. They are subject to atmospheric fading and distortion, and it is very difficult to compare an oscillator frequency to these signals with any degree of accuracy.

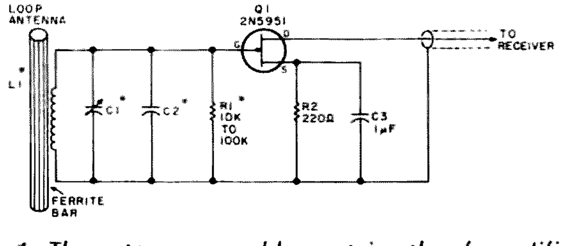

Fig. 1. The antenna assembly contains the rf amplifier, which receives its power on the same coax that carries signal to the receiver. C1 and C2 are selected to tune the loop to 100 kHz.

None of these techniques seemed acceptable, so a search was made through the technical literature, revealing that many stations operate in the VLF band with extreme frequency accuracy. After constructing receivers for several of the VLF stations and discovering the nature of their modulation, the loran-C signal from Carolina Beach NC was selected as a frequency standard. The loran-C station transmits pulse bursts with a carrier frequency of 100 kHz plus or minus three cycles per week. This precision is equivalent to measuring the distance around the world to the nearest tenth of an inch!

The loran-C stations at different locations transmit trains of nine pulses about one millisecond apart repeated about twenty times per second (Photo 1). The Carolina Beach station transmits three-hundred-kilowatt pulses with a ground wave coverage of about one thousand miles.

There are several ways to use the loran-C signals for frequency calibration. The simplest is the scope drift method. The frequency being measured must be related to 100 kHz; for example, a ten-MHz signal from a generator or the timebase of a frequency counter can be divided down to 100 kHz with two 7490 chips. The 100-kHz signal derived in this manner is fed to a scope trigger input while the loran-C signal is fed to the vertical input. When the scope is synchronized to the counted oscillator, the cycles of the loran signal will be seen to "crawl" across the screen if there is any oscillator frequency error. The oscillator may then be adjusted to make the loran signal appear stationary on the screen. This method may be used to set a 100-kHz crystal calibrator, but care must be taken not to pull the calibrator frequency with the scope probe capacitance. It is important to verify that the loran-C signal is actually being received; this is done by reducing the scope sweep speed to 10 or 20 Hz and observing the loran pulse train (Photo 1). Even at the high (2-5 us/div.) sweep rate used with the drift technique, the loran-C signal will have a noticeable 20-Hz flicker while 60-Hz and other interference will appear as continuous or random oscillations.

The receiver described here only suggests one of the many possibilities. A

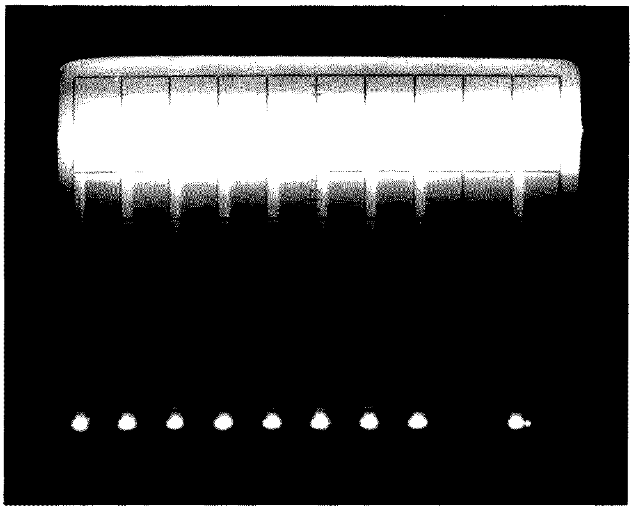

Photo 1. *Scope trace of loran-C pulse train. Notice the gap at the ninth pulse position. 1 ms/division.*

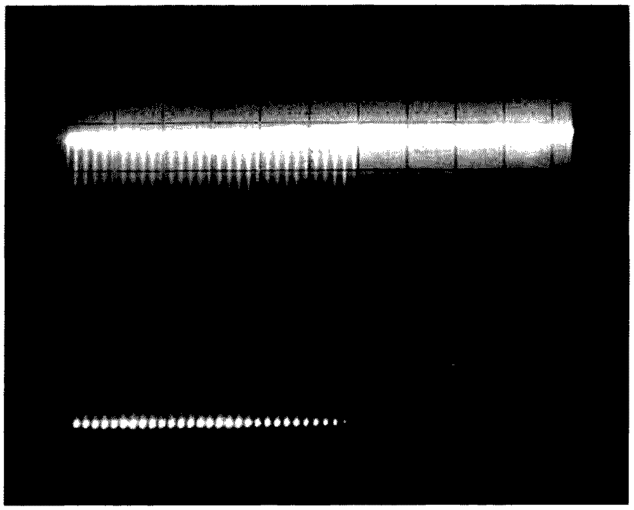

Photo 2. *Scope trace of individual 100 kHz pulse burst (50 us/division).*

TRF design is necessary to maintain the frequency and phase accuracy of the loran-C signal. The agc is essential if the threshold video amplifier is used. The major pitfall of TRF receiver design is oscillation, hence the importance of verifying the received signal. With the receiver shown in Fig. 2, opportunities for oscillation are minimized by placing the rf amplifier (Fig. 1) at the antenna. The antenna may be an open loop, ferrite bar, or longwire. Good results have been obtained by winding about 150 turns of enamel wire on the back-to-back halves of a TV flyback transformer core. The antenna coil (L1) is

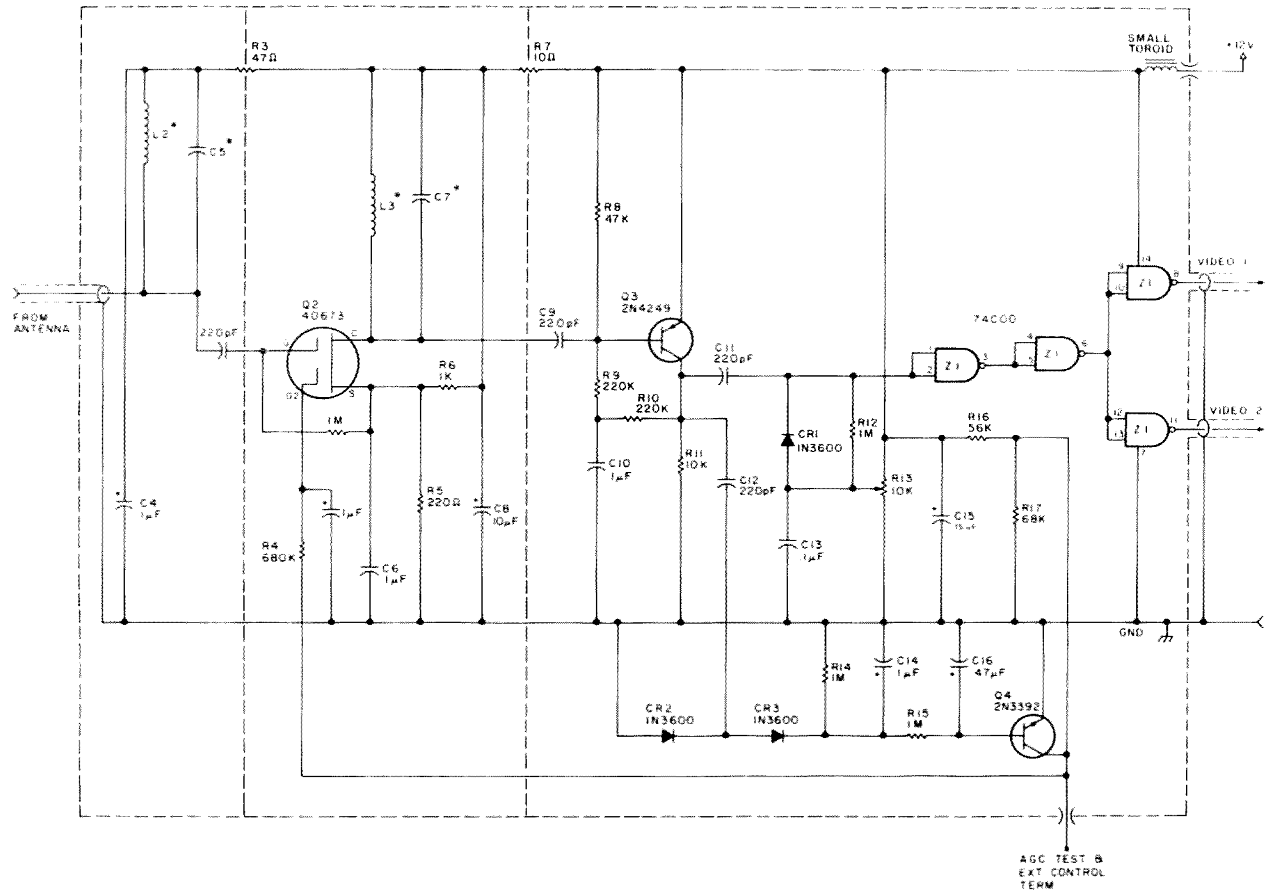

Fig. 2. Schematic of the VLF receiver. The dashed lines indicate an adequate shielding arrangement. C5 and C7 are selected to tune the receiver to 100 kHz.

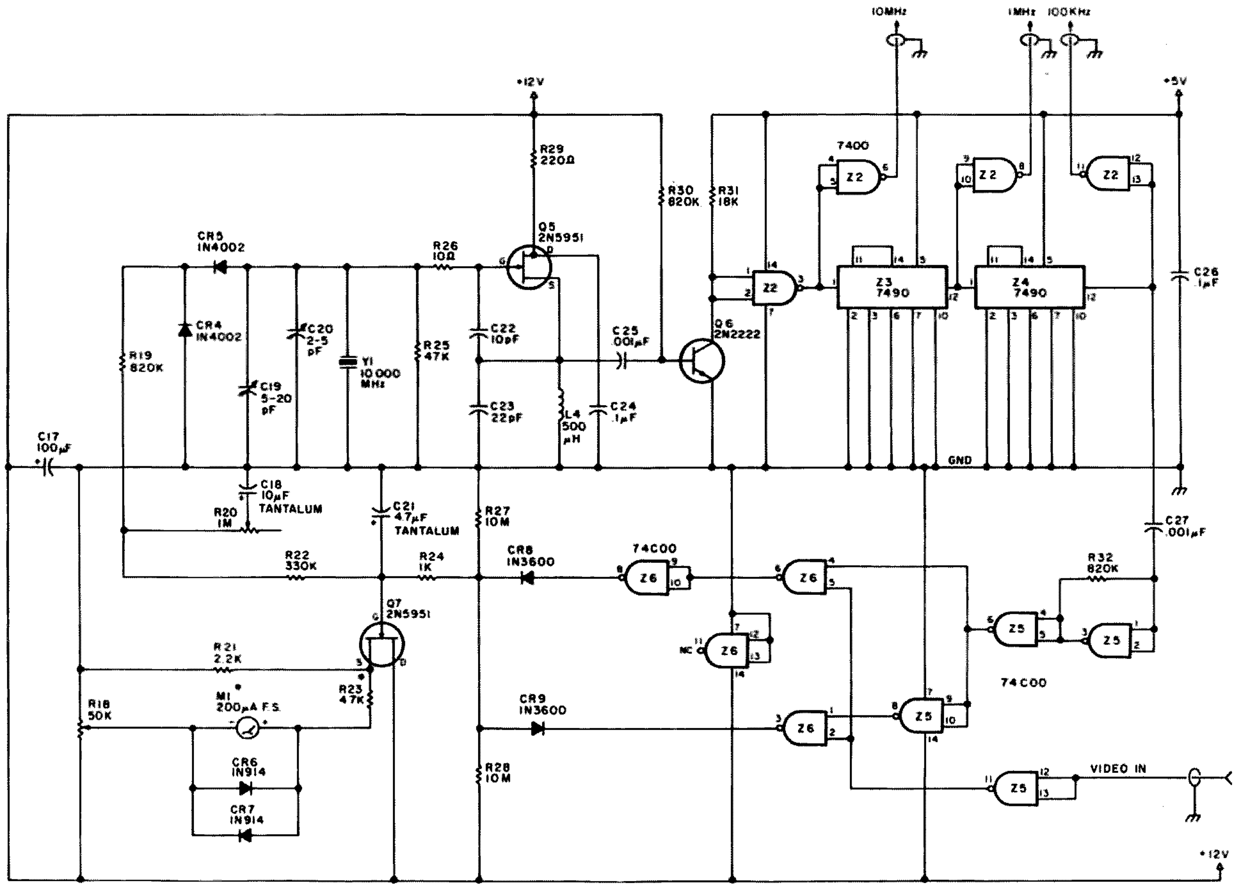

Fig. 3. The phase-locked crystal calibrator employs a mixture of TTL and CMOS logic.

tuned to 100-kHz resonance using a grid dipper or signal generator. The resistor (R1) across the loop is to suppress ringing which can play havoc with the phase-locked oscillator. The resistance should be in the range of 10k to 100k, depending on the Q of the antenna. A low-resistance value may be helpful if the receiver tends to oscillate. Use whatever coils are available for the receiver's tuned circuits (L2 and L3). The inductance should be in the range of 1 to 5 mH, with a self-resonance above 200 kHz. Toroids are preferred to minimize oscillation, but solenoid-type coils are adequate if careful attention is paid to shielding and coil orientation. I found a 4 kV photoflash trigger coil that worked nicely for L3 and had the advantage of being slug tuned. The antenna lead-in coax capacitance in parallel with C5 sets the resonant frequency of L2; therefore, L2 must be smaller if the coax length is great. If L2 is one mH, the total capacitance of the coax plus C5 should be about 2200 pF. An audio or rf signal generator and a scope are used for preliminary tuning of the receiver stages. The receiver circuits should be tuned with the agc at or near maximum, and the coils not being tuned should be swamped with a

Station	Frequency kHz	Accuracy Parts in 10^{12}	Modulation	Location
GBR	16	100	?	Rugby, U.K.
NAA	17.8	50	Sometimes FSK	Cutler, Me.
NPG	18.6	50	CW	Jim Creek, Wash.
WWVL	20	20	CW	Fort Collins, Col.
NSS	21.4	50	CW	Annapolis, Md.
NBA	24	50	A1	Balboa, Panama Canal Zone
NPM	26.1	50	CW	Lualualei, Hawaii
OMA	50	1000	AM	Podebrady, Czechoslovakia
WWVB	60	20	Slight AM	Fort Collins, Col.
MSF	60	100	Az	Rugby, U.K.
DCF 77	77.5	1000	?	Mainflingen, W. Germany
LORAN-C	100	50	Pulse	Carolina Beach, N.C.
RWM	100	5000	?	Moscow, U.S.S.R.

Table 1. From Reference Data For Radio Engineers, *Howard W. Sams, Inc., 5th Edition, 1974.*

low resistance. Two video outputs are provided by Z1; one drives the phase comparator while the other is used for viewing the received signal on the scope. These video lines must be shielded all the way to their destinations. The video threshold pot (R13) may be outside of the receiver shielding and is adjusted to produce a clean, negative-going loran-C signal containing little or none of the receiver ringing after each 100-kHz pulse burst. If all efforts at interstage shielding and orientation fail to eliminate CW receiver oscillation or agc "bumping" with the antenna well removed from the receiver circuitry, try adding degeneration resistance in series with C6 or the emitter of Q3 and adjusting the agc voltage manually to determine the point at which oscillation starts; then limit the agc range below this point by lowering R17. It should be noted that some frequency counters, digital meters, crystal calibrators, digital clocks, and pocket calculators radiate sufficient signals around 100 kHz to blank the receiver. This QRM may exhibit symptoms similar to receiver oscillation, so check them out before pulling out all your hair. If bursts of 100 kHz appear on the video synchronous with the 60-Hz power, check fluorescent lighting, arcing lines on utility poles, SCR dimmer and power controls, and electric motors. Long bursts of interference may be observed from lightning as much as 50 miles distant; these bursts are followed by receiver agc desensitization and may cause momentary small variations in the 10-MHz oscillator frequency. Other possible sources of random interference are thermostats and electric furnace igniters. Many of these problems are solved by mounting the antenna (Fig. 1) on the roof.

The circuit shown in Fig. 3 provides a 10-MHz signal phase-locked to the loran-C carrier. It may be used to check the accuracy of a frequency counter or as a crystal calibrator providing 10-MHz, 1-MHz, and 100-kHz outputs with harmonics extending well into the VHF region. The crystal oscillator circuit of Q5 becomes a narrow range voltage-controlled oscillator through the varactor action of CR4 and CR5, which are ordinary silicon rectifier diodes. The tuning voltage applied at the junction of the diodes can slew the oscillator plus or minus 50 Hz from the center frequency which is adjustable with C19 and C20. The 10-MHz signal is buffered and counted down to 100 kHz for phase comparison. The phase comparator shown was chosen due to the low duty cycle and possible high noise content of the loran-C signals. A plus or minus 30-Hz lock range may be expected of the circuit. Meter M1 indicates variations in the tuning voltage applied to the voltage-controlled crystal oscillator. Resistor R18 is used to center the meter at the optimum tuning voltage (6 V, assuming equal comparator diode leakage and negligible loop filter capacitor leakage). Due to the high impedance of the phase comparator circuit, it is imperative that C18 and C21 be of the low-leakage tantalum type and that diodes CR4, CR5, CR8, and CR9 be selected for minimum reverse leakage current.

Preliminary adjustment of the vco is as follows:

1. With the unit enclosed in its housing, apply power and allow at least one-half hour for the temperature of the oscillator to stabilize.

2. Adjust the video threshold control (R13) to produce a near zero volt dc level containing no signal or noise on the video line. This should drive the source of Q7 to approximately six volts.

3. Set R20 to its maximum resistance position.

4. Adjust R18 to bring M1 to midscale.

5. Adjust C20 to the midpoint of its capacitance range.

6. While monitoring the buffered 10-MHz signal on the frequency counter, set the oscillator frequency to exactly 10.000000 MHz by adjusting C19.

7. Readjust the video threshold control (R13) to produce a clean negative-going loran-C signal.

8. The unit should now be phase-locked to the loran-C carrier. Very slowly rotate C20 while watching the frequency counter and the tuning voltage meter. The meter indication will slowly change in one direction as the PLL maintains phase lock with the loran signal. Note the meter indication at which the PLL unlocks (the frequency counter and tuning voltage meter indication begin varying cyclically).

9. Repeat step 8, driving the meter indication in the opposite direction. Note the meter indication.

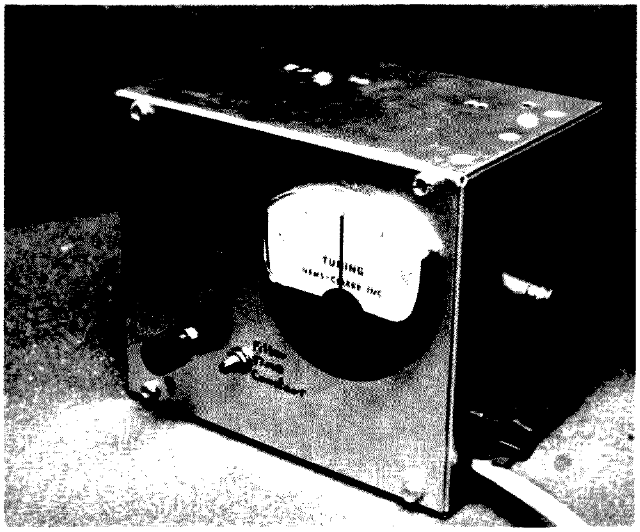

Photo 3. Complete calibrator is housed in 4" x 4" x 6" minibox.

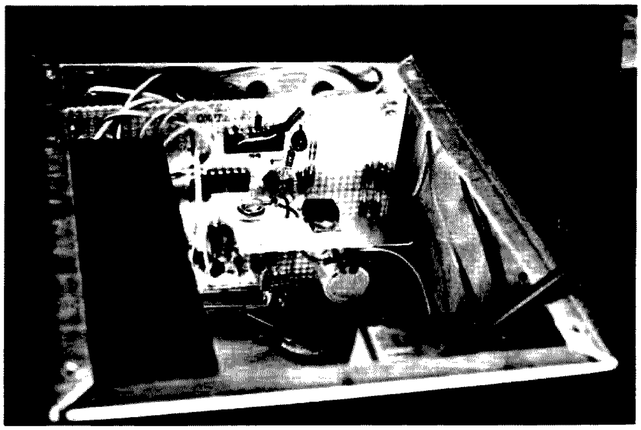

Photo 4. Behind the front panel; the receiver is mounted at the top with its input circuits away from the phase-locked oscillator which is mounted on the left wall.

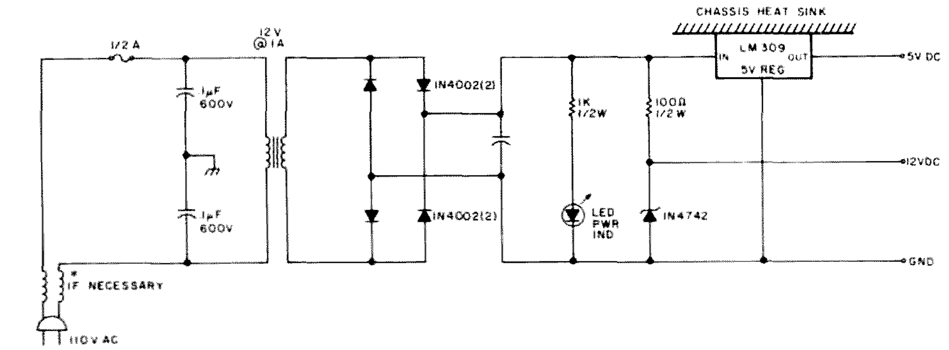

Fig. 4. Power supply for the calibrator.

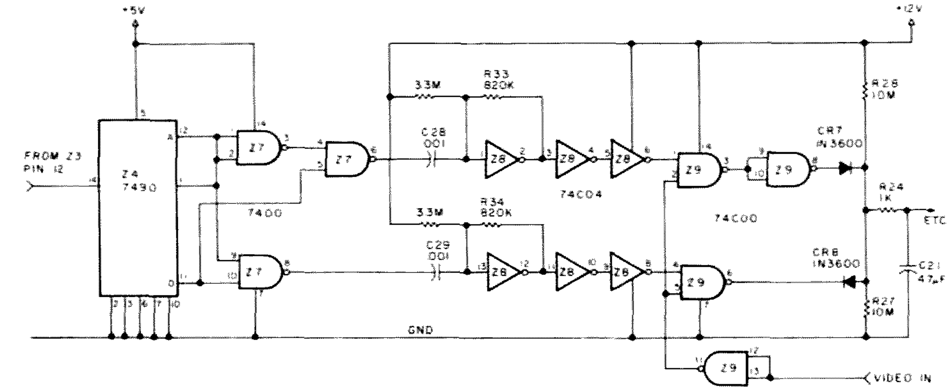

Fig. 5. This phase detector is useful when certain types of master-slave interference are encountered. These parts are inserted into the circuit of Fig. 3, while Z5, Z6, R32, and C27 are omitted.

10. Readjust R18 so that the PLL lock range is symmetrical with respect to the meter centered indication.

11. Adjust C20 to bring M1 to center scale.

12. Slowly adjust R20 toward its minimum resistance position, stopping at the setting which gives the most stable frequency counter indication.

13. The unit is now providing an extremely accurate 10-MHz signal which may be used for frequency calibration.

14. Should the PLL unlock due to signal dropout or room temperature excursions, slight readjustment of C20 should restore the phase-locked condition.

The calibrator shown in Photo 3 has maintained phase lock for days on end in a normal shirt-sleeve environment, yielding plus or minus one-Hz accuracy of the 10-MHz signal. If your version will be required to operate over large temperature variations, or you desire ridiculous frequency accuracy, consider mounting the vfo components in a temperature-controlled oven.

One problem that may be encountered in the operation of the calibrator results from the phase difference existing between the loran-C master and slave signals. This may cause the tuning voltage to fluctuate radically as the master and slave signals move in and out of coincidence. The solution to this problem depends upon your exact geographical location. If the master and slave signals arrive exactly in phase, there is no need to differentiate between them. If the phase difference is greater than about ten degrees but less than ninety degrees, the signals may be separated on the basis of their amplitude difference. This is accomplished by adjusting R13, the video threshold control, to pass only the stronger of the two signals. It may be helpful to position the loop to null the weaker signal. If the two signals differ by more than ninety degrees, the phase detector modification shown in Fig. 5 may be used, but it will reduce the vco lock range, and the 100-kHz video must be limited to a twenty-percent duty cycle.

This article presents basic concepts on which

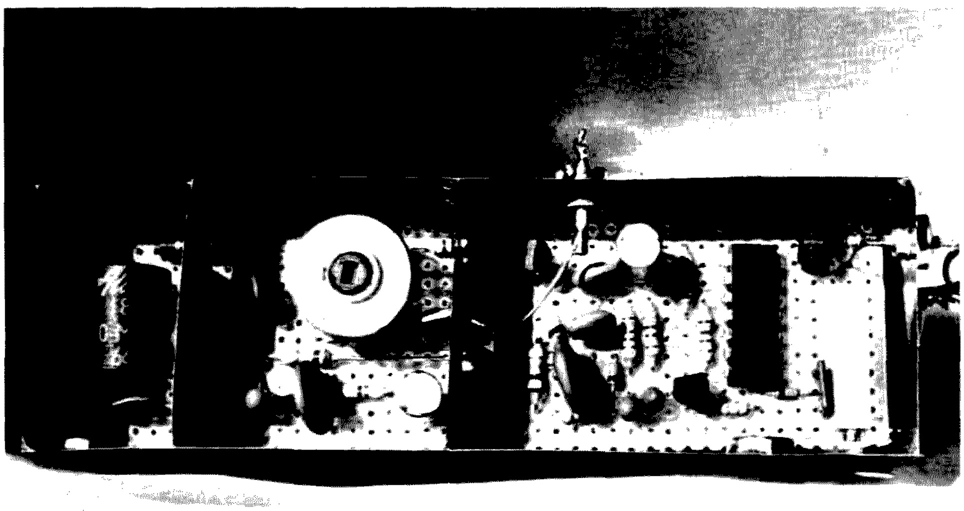

Photo 5. 100 kHz receiver. Notice shielding.

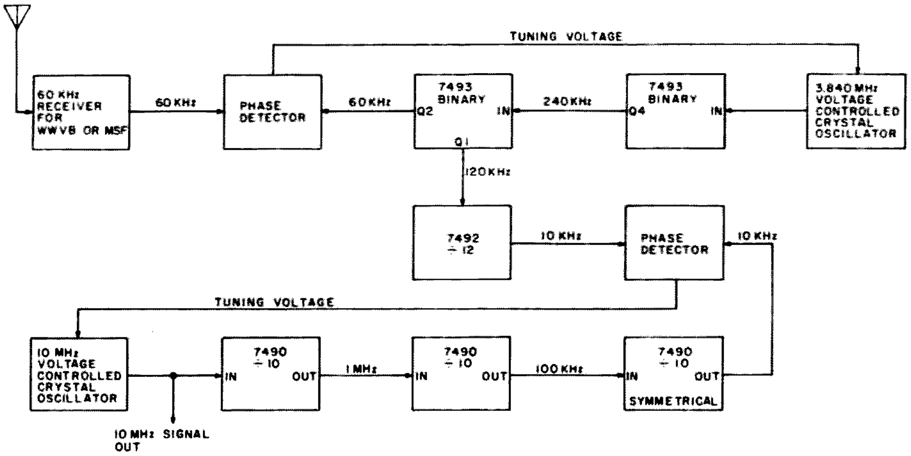

Fig. 6. A typical method of translating some VLF signal frequencies to a 10-MHz phase-locked crystal calibrator.

many variations are possible. The vco may operate at any frequency that can be divided down to exactly 100 kHz. It is possible to use an oscillator that is not crystal-controlled for the vco; however, the stability must be very high and the voltage-controlled tuning range very narrow (less than plus or minus one Hz per volt when divided down to 100 kHz). If upon construction of your receiver no loran-C signal of usable strength can be produced, try retuning to receive one of the stations listed in Table 1. These signals may be used for calibration in the same manner as loran-C, except that their frequencies are more difficult to relate to multiples of 100 kHz (refer to Fig. 6 for some suggested arrangements). If the station you choose emits A1 telegraphy, the phase discriminator shown in the loran-C unit will give best results. If, however, an uninterrupted CW or amplitude modulated station is chosen, a more conventional phase discriminator may be used.

In this article I have attempted to cover every possible difficulty that may be encountered while employing these techniques. However, my intent is not to scare anyone away from constructing a most useful tool for amateur work. I would suggest constructing the receiver described and observing the signals before proceeding to build the complete calibrator. If reasonable efforts are made at shielding and sensible component layout is employed, little difficulty should be encountered duplicating the unit described. We may find that the VLF band, once only a curious phenomenon, will become very important to the serious radio amateur. ■

CONTESTS

from page 88

more = multiplier of 1.00; 300 to 499 Watts = 1.50; 101 to 299 Watts = 2.00; 100 Watts input or less = 4.00. Final score is total QSO points times IDX multipliers times power multiplier.

AWARDS:

For each mode and class of operation, awards will be issued to top scorers in each US state, Canadian province, DXCC country, and to each IDX listed island. Other special achievement awards will be issued as determined by the IDX Contest Committee. All committee decisions will be final.

LOGS AND ENTRIES:

Contestants must include a self-prepared log sheet for each band, and a self-prepared dupe sheet for all entries of 100 or more contacts. Entries must also include a summary sheet available from the contest committee. Entries without the official summary sheet will be treated as "check logs" and will not be eligible for awards. Log sheets must indicate: date/time in GMT, band, station worked, RS(T) sent and received, DXCC country or IDX island worked. Entries must be postmarked no later than Jan. 4, 1979. All entries must include a large SASE. Foreign contestants enclose 3 IRCs. Every attempt will be made to publish an abbreviated form of the contest results in all major amateur publications. Multi-transmitter stations will not be eligible for awards. Failure to submit a dupe sheet for 100 or more contacts and operating more power than the power class multiplier claimed are both grounds for disqualification.

GRANDE RONDE RADIO AMATEURS

Grande Ronde Radio Amateurs, a small club located in Union County, eastern Oregon, is offering an award to any foreign or domestic amateur who submits evidence of two-way communicaitons with three amateur radio stations in the Grande Ronde Valley. Any band or mode may be used and no QSLs need be sent. The fee for the award is $1.00 or two IRCs, and it will be sent postpaid upon receipt and verification of the application. Letter applications should include the callsigns, dates, and times of all contacts claimed and should be sent to: June Campbell WB7FDB, Rt. 2, Box 2486, La Grande OR 97850. A limited number of honorary awards will be made at the discretion of club members.

Ham Help

I recently acquired a Dynasciences model 330 digital multimeter of the used variety, and it had no manuals or schematics with it. I would like to obtain these manuals and schematics if at all possible, and also would like any information on adding on the ac measurement capability. If anyone has the above manuals and schematics, I will be glad to pay for having copies made or whatever arrangement we can come up with.

Don E. Brown WB7FGO
Rt. 2 Box 949
Libby MT 59923

I'm looking for a ham in the Hollywood CA area who would like to share an apartment. He must have a setup capable of making phone contacts with southeast Florida.

R. Selken WB4VWV
3931 NW 31st Ave. Apt. 5
Ft. Lauderdale FL 33309

I am in need of diagrams and conversion information for a military R-392/URR radio receiver recently purchased. I could also use some information on getting into TTY.

Robert E. Bunn WA0LKE
Rt. 3, Box 565
West Plains MO 65775

Help! I'm looking for the name and address of someone on the east coast who will rewind a plate transformer for a Collins KWS-1.

Donald O. DeLung WB4LJE
830 Pinecrest Avenue
Bedford VA 24523

I need information leading to the name of a manufacturer and possible purchase of an allmode 6m, 2m, 1¼m, ¾m transceiver tunable in 5 kHz steps or better.

Victor Ung WA6PDM
1980 Magnolia Dr.
Monterey Park CA 91754

FCC

Reprinted from the Federal Register.

from page 207

benefit of the handicapped, what standards should we apply for granting a waiver?

How To Comment on This Inquiry

The FCC is very interested in any comments you or your group might have to help the Commission consider policies or rules to help meet the amateur radio communications needs of the handicapped. The Commission asks those submitting comments to evaluate each of the decision alternatives in terms of the decision factors we have outlined. (For example, what would the impact on the amateur service be if the Commission were to adopt alternative 2?) We also welcome suggestions about other decision alternatives and factors we may have omitted. All persons submitting comments should bear in mind the basic questions the Commission wishes to resolve:

The Commission's amateur examination program is partially founded on the proposition that the Commission is obligated to provide the handicapped with equal opportunity to obtain amateur operator licenses. If the Commission's commitment to equal opportunity is sound, is the Commission doing enough to guarantee that equality? If not, what else should we do?

The Commission does not afford the handicapped special consideration with respect to the passing standard on amateur radio telegraphy examinations. Is Commission policy in this regard sound? If not, how should we go about implementing a workable program of extending the handicapped special consideration in the administration and grading of amateur telegraphy examinations?

Comments are due no later than November 30, 1978. Reply comments (which are responses to comments filed by others) are due no later than December 29, 1978. You can read comments filed by others in the FCC's Public Reference Room, Room 239, 1919 M Street NW., Washington, D.C. The Commission is unable to furnish copies of comments submitted in a rulemaking, but, for a fee, our duplicating contractor will handle requests for this kind of material: Downtown Copy Center, 1114 21st Street NW., Washington, D.C. 20037. Your comments should be addressed to: Secretary, Federal Communications Commission, Washington, D.C. 20554. Formal participants must file an original and 5 copies of their comments, reply comments and other materials, following instructions found in the FCC Rules. Participants wishing each Commissioner to have a personal copy of its comments may file an original and 11 copies. Members of the general public who wish to express their interest by participating informally may do so by submitting one copy. In addition, you may submit an informal comment over the Commission's unattended teletype (TTY) terminal by following this procedure:

1. Dial 202-254-9292 not a toll-free number.
2. You will receive the following message: You have reached an unattended TTY at the FCC in Washington. Please type in your message—it will be recorded automatically.
3. Upon completion of the automatic message, immediately start to type your reply. The machine will not give you a (GA) go ahead.
4. The unattended machine is activated by your TTY reply. Any silent period of 15 seconds will cut off your phone connection. It is important that you at least hit the period key during any delay that lasts 10 seconds. This will keep your telephone connection open until you have completed your message.

All comments should contain the correct docket No. of this inquiry. Further information concerning this inquiry may be obtained from Mr. Gregory M. Jones, Safety and Special Radio Services Bureau, at 202-634-6619 not a toll-free number. The deaf or hearing impaired may obtain additional information about this inquiry by calling the Commission's attended TTY at 202-632-6999 not a toll-free number.

Federal Communications Commission,
William J. Tricarico,
Secretary.

Ham Help

I have been out of amateur radio since 1961, so you can imagine my total bewilderment about types and manufacturers of amateur equipment these days. I appreciated the article in the August, 1978, issue, "Ham Radio Is NOT A Rich Man's Hobby," since I am in the process of reconditioning an NC-183D and a B&W 5100B. Both these pieces of gear were purchased new in 1955 and were used quite often for 5-6 years. Since that time, they have "collected dust" and been banged around during three changes of address.

The receiver needed a new power transformer and the electrolytic capacitors were replaced (after two of them "let loose" with a sharp pop). Since reading this article, however, I have decided to replace the paper bypass caps. It does need some alignment though, and I'm letting one of the local experts realign the beast.

The transmitter presents a different set of circumstances. I was always a CW-only operator, which was fine then. Since the 50s, SSB has become "the voice mode" more than AM. I am looking for an SSB exciter which can be made compatible with the 5100B—either one made by B&W or one from someone else which can be adapted. The other alternative is to obtain some schematics of home-brew equipment from someone who has covered this same territory some 10-15 years ago.

So you see, I feel like Rip Van Winkle—can anyone help? I certainly would appreciate it.

Fred McKenzie
950 Damrosch St.
Largo FL 33541

I need a schematic and manual for a TRUVOM made by Eico (model #100A4).

Paul Hoy WA3YME
130 East Main St.
Tremont PA 17981

I need the schematic and operating manual for a Radio Manufacturing Engineering, Inc., model VHF-152. I will pay cost of reproduction.

H. Hansen
8 Abenaki Trail
Littleton MA 01460

I need an operation/maintenance manual and a schematic for a Dumont oscillograph, type 208-B, serial number 7683. If anyone could help me on this piece of equipment, it would be greatly appreciated. I will gladly reimburse any mailing or duplicating expenses incurred. Thank you.

David T. Baxter AD4X
204 East Depot Street
Greenville KY 42345

Social Events

SOUTH GREENSBURG PA
NOV 4

The Foothills Radio Club of Greensburg will hold its annual swap-n-shop on Saturday, November 4, 1978, from noon to 5:00 pm, at St. Bruno's Church at the junction of U.S. Rte. 119 and Rte. 819 in South Greensburg, Pennsylvania, just off turnpike exit 8. There will be an indoor flea market. Talk-in on .07/.67 and .52. For further information, contact Melvin Ruble WA3RVD, Mark Drive, Delmont PA 15626.

HOUSTON TX
NOV 4-5

The Houston chapter of Ten-X, S.H.O.T., will hold its second annual Houston Hambash on Saturday and Sunday, November 4 and 5, 1978, at Spring Creek Park. There will be a barbecue, soft drinks, beer, prize drawings, and planned activities for all, including the kids. Full camping facilities, including hookups, are available. All amateurs are invited. For more information, contact Bob Libbers WB5FII, 4034 Jackwood, Houston TX 77096.

NORTH FORT MYERS FL
NOV 5

The Fort Myers Amateur Radio Club will hold its Hamarama 78 on Sunday, November 5, 1978, 8:00 am to 4:00 pm, at the Lee County Fairgrounds, North Fort Myers, Florida. The location is at the intersection of highways Fla. 31 and C-78. Admission is $3.00 and children are free with parents. For further information, contact Bob W. Sloat K4VGN, Hamarama Committee Chairman, FMARC, PO Box 0537, Tice FL 33905.

FRAMINGHAM MA
NOV 11

The Framingham Radio Club will host the largest indoor flea market in Massachusetts on Saturday, November 11, 1978, at the drill shed located in the rear of the Framingham Police Station, 81 Union Avenue, Framingham, Massachusetts. The event begins at 10:00 am, rain or shine. Door entry fee is $1.00 per person and includes two chances for door prizes. Tables are $5.00 for a six-foot table, $3.00 for a half table. Tables are $7.50 if not reserved in advance. Talk-in on .75/.15, .52, and CB channel 12. For advance reservations, send check to Framingham Radio Club, PO Box 3005, Framingham MA 01701, or phone (617)-877-7166.

MCAFEE NJ
NOV 10-12

The Hudson Amateur Radio Council, Inc., will hold the ARRL Hudson Division Convention on Friday through Sunday, November 10-12, 1978, at the Playboy Resort and Country Club at Great Gorge in McAfee, New Jersey. There will be exhibits, a flea market, forums, and a banquet featuring the New York Mets' Ron Swoboda WA2HVM as speaker. Admission is $3.50 in advance, $5.00 at the door. The Saturday night banquet is $15.00 in advance, $17.00 at the door. There will be a large program for both hams and non-hams, plus a two-day women's program. Talk-in on 146.10/.70 and .34/.94. For complete details, contact Hank Wener WB2ALW, Chairman, 53 Sherrard Street, East Hills NY 11577.

SELLERSVILLE PA
NOV 12

The RF Hill Amateur Radio Club will hold its Winter Indoor Hamfest II on Sunday, November 12, 1978, 9:00 am to 5:00 pm, at the Sellersville National Guard Armory, Rte. 152, Park Ave., Sellersville, Pennsylvania. The event will be all indoors and heated. Prizes and refreshments are planned. Talk-in on .28/.88 and .52. Donation is $2.00; XYLs receive free admission. Dealers' admission is $3.00. Bring your own tables. For more info, write Sam Cox WA3IUH, PO Box 29, Colmar PA 18915.

WEST MONROE LA
NOV 12

The Louisiana Hamfest will be held on Sunday, November 12, 1978, at the West Monroe Civic Center in West Monroe, Louisiana. Exhibitors are welcome. There will be swap tables available and prizes to be given away. For information, contact AE5V, 500 McMillan, West Monroe LA 71291.

FORT WAYNE IN
NOV 19

The Allen County Amateur Radio Technical Society will hold its 6th annual hamfest on Sunday, November 19, 1978, 8:00 am to 4:30 pm, at the Allen County Memorial Coliseum, corner of Parnel and US 30 bypass north. Activities include prizes, forums, and indoor exhibition and flea market area. Admission is $2.50 and children under 12 are free. Tables (3' x 8') are $3.00. Talk-in on 146.28/.88 and 146.52. For details, write ACARTS, Inc., PO Box 342, Fort Wayne IN 46801. Include an SASE.

LAUREL MD
NOV 26

The Columbia Amateur Radio Association will hold its 2nd annual hamfest on Sunday, November 26, 1978, beginning at 8:00 am, at the Laurel Race Way, three miles north of Laurel on Route 1. Admission is $2.00 and tables are $5.00. There will be food services, prizes, and a giant flea market. Everything is indoors. Talk-in on 147.735/.135, 146.16/.76, 146.52/.52, and CB channel 1. For information and reservations, contact Sue Crawford N3SC, 6880 Mink Hollow Road, Highland MD 20777.

✔ Reader Service—see page 323.

Albert H. Coya N4AL
1710 S.W. 83rd Court
Miami FL 33155

Ham Help!

—a telephone aid for the blind

Jeff Wallis is blind and has been a ham radio operator for a number of years. His call is WB4LGI. I talked to Wallis a couple of times in the two meter band without being aware of his handicap.

After a few unfortunate experiences in different jobs and being mugged in downtown Miami a couple of times, Jeff landed a temporary job with the U.S. Customs Service as a radio and telephone operator. In this position, Jeff is required to answer a five-line telephone. The ringing hold line in use is indicated by a flashing light below the push-button for each line. In his condition, Jeff was unable to operate this type of telephone.

On the two meter band, Jeff met Ian Seidler W4MRR, an engineer with Racal-Milgo Electronics, builders of computer equipment in Miami. Ian talked to Len Klein WB4YJG, and with other hams at the company, they designed and built a very simple light-controlled solenoid that will tell at the touch of the hand which light is flashing. Cliff Bloom WD4LPU, a technician with ETC Radio in Lauderhill, Florida, built the "black box" with the components donated by different sources.

The design and building of this clever device involved lots of problems because the telephone company does not permit any direct attachment to the telephone. The unit has its own power supply and is small and simple. The donors were Racal-Milgo, Deltrol Control, Guardian Relay, and Clairex. A complete diagram of the circuit is available free to anyone. Write to Ian Seidler W4MRR, Mail Station 4101, c/o Racal-Milgo, Inc., 8600 N.W. 41st St., Miami, Florida 33166. ■

Five lines control the telephone ready to be operated by blind persons.

Jeff Wallis WB4LGI with Cliff Bloom (left) and Ian Seidler W4MRR (right). Ian is showing Jeff how to operate the clever machine.

An Experimenter's Delight

—a lab bench with style

Frederick H. Raab WA1WLW
240 Staniford Road
Burlington VT 05401

With a little work, and not as much money as you'd think, you can build a professional-type lab bench tailored to your individual needs. You probably won't copy my design exactly, but it should give you some ideas and directions for your own design.

Some of the features I included are: lighted switches, one main on/off switch, switched 220 V ac and 110 V ac outlets (the latter are quite handy for things like soldering pencils without an on/off switch), a ground fault indicator, ground posts, and switched dc power. The dc power is obtained from readily available surplus computer power supplies situated on the lower shelf; power is available from both binding posts and special outlets on the bench.

The Bench

I began this project by looking at commercially available benches. I wanted something that looked good, would be convenient and flexible, could be disassembled for moving, and didn't cost too much. Usually, I found that ready-made lab benches either cost a fortune or didn't meet my requirements. The exception was the Kewaunee Scientific assembly table given in Table 1. It is available in several lengths and colors, and its height is adjustable.

The table top, panels, legs, and lower shelf (Fig. 1) are assembled upside

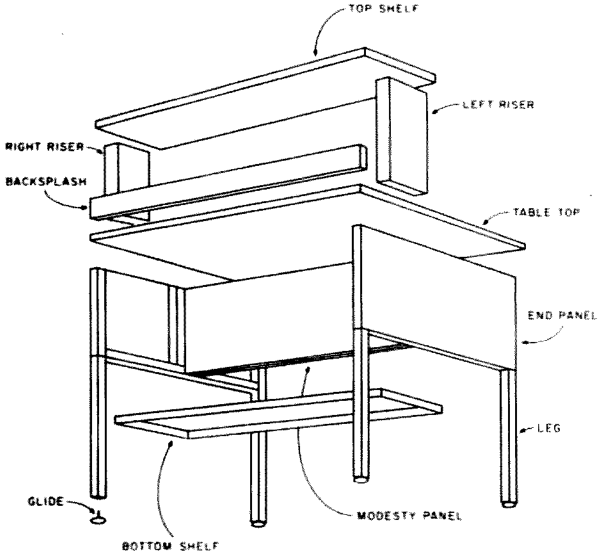

Fig. 1. Bench assembly details.

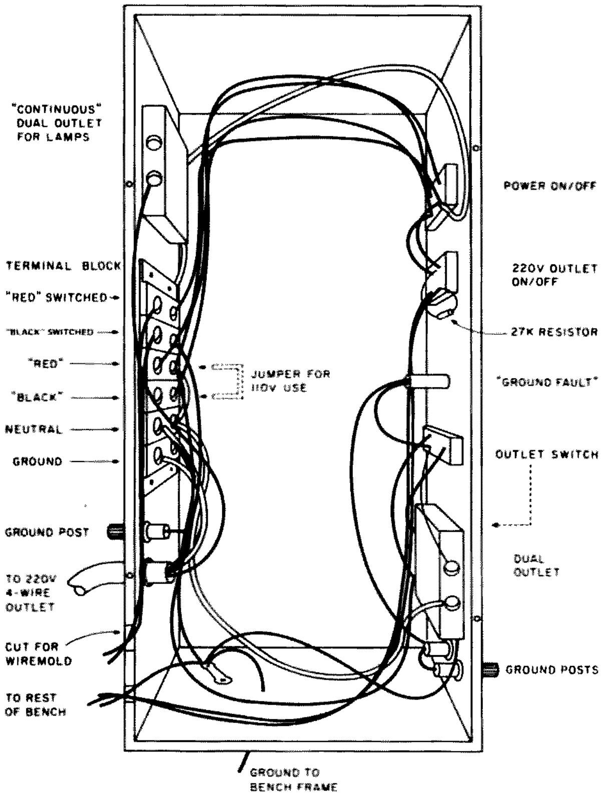

Fig. 2. Wiring and construction of right riser.

down, preferably on a carpeted floor. You will need to drill holes into the bottom of the table top for the screws that fasten the panels to the top. I suggest that you measure the depth to be drilled and mark it on the bit with a piece of masking tape; this will prevent you from drilling through the Formica™ on the other side. I assembled the table with the lower shelf open to the rear of the bench, rather than the front as shown in the instructions. This gets the shelf out of the way of your legs and also makes a convenient, but hidden, place to put transformers and power supplies. When the main portion of the bench is assembled, set it upright and mount the backsplash with two angle brackets at about one-third and two-thirds of the distance from end to end. The ends of the backsplash will later be fastened to the risers.

Risers

Since I wanted a number of special functions in the risers, it was easier to build my own rather than try to adapt the risers made for the bench. I used 8″ × 17″ × 3″ aluminum chassis and covers for the risers. The functions I incorporated are shown in Table 2. You can adapt these to your own needs. I should note that the Honeywell lighted rocker switches seem to be quite convenient and are available with either 100 V ac or 14 V dc lamps.

Begin assembly of the risers by laying out the positions of the holes that must be cut. While these holes can be made with a nibbling tool and router, a set of chassis punches will do a much neater job. It will also be necessary to cut and to bend tabs for the Wiremold® conduit. To see what is required, take a look at the tabs that come in the boxes.

When all this is done, the risers can be painted to match the bench and lettering can be added using decals or dry transfers. A coat of Krylon™ will preserve the lettering. The painted and lettered risers are then fastened to both the table top and the backsplash. The top shelf is then mounted on the risers. Drill a hole through the bottom of each riser and the table top under it to allow the bench frame to be connected to ground.

I used residential-type surface-mounted Wiremold® for most of the power outlets on the bench. Five double boxes were installed on the backsplash and connected with two strips of conduit. On top of each box, I mounted two grounding posts, and three of the five boxes hold two double outlets. One box has one double outlet and one 220 V ac outlet, and another has a dual 12 V dc outlet and a set of binding posts for the dc power supplies. Number 12 type THHN (conduit-type) wiring was used throughout.

Wiring the bench is straightforward, and I don't need to insult your intelligence by going into detail. The power cord is connected to four blocks of a six-terminal strip. The other two blocks are for the switched-power connections. The bench is wired as if 220 V ac is available; if only 110 V ac power is available, simply jumper the two blocks in the terminal strip. Roughly half of the outlets are connected to the red side of the 220 V ac line and the remaining outlets are connected to the black side. The main power switch shuts off everything except one outlet on the back of the right riser (for lamps and clocks). This is an important safety feature, so make sure others in your household know about it.

Wires are routed around the edges of the risers, mostly for neatness (Fig. 2). The ground fault indicator is a neon lamp connected between the ground and neutral, and will light up if either becomes hot. All ground posts are connected by a common number 12 green wire, as is one outlet in each box. The bench frame is grounded to each riser by wires running through the table top to the inside of the risers.

Finishing-up

By now you will need to clean the Formica™ top and vacuum debris out of the risers. Check out the wiring, first with an ohmmeter and then with 110 V ac. Place your power supplies on the back shelf and check their outputs. (Rubber feet on the power supplies will go a long way toward preventing them from making the bench hum.) Install the covers on the risers, put the bench in place, and adjust the feet to level the bench, if necessary. A swivel bar stool makes a nice lab stool! ■

	Bench	
Table	Sturdilite*	PT-800
Lower shelf	Sturdilite*	LS-888
Backsplash	Sturdilite*	BS-862
Upper shelf	Sturdilite*	RS-862
	Risers	
Risers	Bud chassis	AC-412
Covers	Bud plate	BPA-1520
Terminal block	TRW	6-150
Binding post, green	EFJ	111-0104-001
Neon lamp assembly	Leecraft Tineon	36EN-2315
	Wiring	
Wiremold® conduit		
Double surface-mounting boxes		
Dual grounding outlets		
220 V ac outlet		
Special purpose outlet		
Cable clamps		
No. 12 THHN wire, various colors		
Heavy-duty line cord (3 or 4 wire)		
Connector for above		

*Table 1. Suggested parts. *These are 62½″ long. For a 42½″ length, use PT-700, BS-742, and RS-742. Manufacturer is Angle Steel Division, Kewaunee Scientific Corporation, Plainwell MI 49080.*

Left riser, front	Right riser, front
Switches for power supplies (4)	Power on/off
Switch for outlet	220 V ac outlet on/off
Dual outlet (top switched)	Ground fault indicator
Ground posts (2)	Switch for outlet
	Dual outlet (top switched)
	Ground posts (2)
Left riser, rear	**Right riser, rear**
Dual outlets for power supplies, individually switched (2)	Dual outlet, unswitched (for lamp and clock)
Cable clamp, dc entrance	Cable clamp, power cord
	Ground post

Table 2. Functions in the risers.

propagation

by
J. H. Nelson

EASTERN UNITED STATES TO:

GMT:	00	02	04	06	08	10	12	14	16	18	20	22
ALASKA	14	7A	7	7	7	7	3A	7	14	21	21A	21
ARGENTINA	14	14	7A	7B	7	7	14	21A	21A	21A	21A	21
AUSTRALIA	21	14	7B	7B	7B	7B	7B	14	21	21	21	21A
CANAL ZONE	14	7A	7	7	7	7	14	21A	21A	21A	21	21
ENGLAND	7	7	7	7	7	7B	14	21A	21A	21	14	7
HAWAII	21	14	7B	7	7	7	7	7B	14	21A	21A	21
INDIA	7	7	7B	7B	7B	7B	14	21	14	14B	14B	14B
JAPAN	14	14B	7B	7B	7	7	7	7B	7B	7B	7B	14
MEXICO	14	14	7	7	7	7	7A	14A	21A	21A	21A	21
PHILIPPINES	14	14	7B	7B	7B	7B	7B	14	14	14	14B	14
PUERTO RICO	14	7	7	7	7	7	14	21A	21A	21A	21	14
SOUTH AFRICA	14	14B	14B	7B	7B	14	21	21A	21A	21A	21	21
U. S. S. R.	7	7	3A	3A	7	7B	14	21A	14	14B	7B	7
WEST COAST	21	14	7A	7	7	7	7	14	21	21A	21A	21

CENTRAL UNITED STATES TO:

GMT:	00	02	04	06	08	10	12	14	16	18	20	22
ALASKA	21	14	7	7	7	7	3A	7	14	21	21A	21
ARGENTINA	21	14	14	7B	7	7	14	21A	21A	21A	21A	21
AUSTRALIA	21A	14	14	7B	7B	7B	7B	14	21	21	21	21A
CANAL ZONE	21	14	7A	7	7	7	14	21A	21A	21A	21A	21A
ENGLAND	7	7	7	7	7	7	7B	14	21A	21	14	7B
HAWAII	21	14	14	7	7	7	7	7	14	21A	21A	21A
INDIA	14	14	7B	7B	7B	7B	7B	14	14	14B	14B	14B
JAPAN	21	14	7B	7B	7	7	7	7	7B	7B	14B	21
MEXICO	14	14	7	7	7	7	7	14	21A	21A	21	21
PHILIPPINES	21	14	7B	7B	7B	7B	7B	7	14B	14B	14B	14
PUERTO RICO	14	7A	7	7	7	7	14	21	21A	21A	21A	21
SOUTH AFRICA	14	14B	14B	7B	7B	7B	14	21A	21A	21A	21	21
U. S. S. R.	7	7	3A	3A	7	7B	7B	14	14	14B	7B	7B

WESTERN UNITED STATES TO:

GMT:	00	02	04	06	08	10	12	14	16	18	20	22
ALASKA	21	14	7	3A	3A	7	3A	3A	7	14	21	21A
ARGENTINA	21	14	14	7B	7	7	7B	14	21A	21A	21A	21A
AUSTRALIA	21A	21A	14	14	7B	7B	7B	7	14	21	21	21A
CANAL ZONE	21	14	7A	7	7	7	7	14	21A	21A	21A	21A
ENGLAND	7B	7	7	7	7	7B	7B	14B	21	21	14	7B
HAWAII	28	21A	14	14	7	7	7	7	14	21A	21A	28
INDIA	14A	14	7B	7B	7B	7B	7B	7B	14	14	14B	14B
JAPAN	21A	21	14	7B	7	7	7	7	7	7B	14	21
MEXICO	21	14	7A	7	7	7	7	14	21A	21A	21	21
PHILIPPINES	21A	21	14	7B	7B	7B	7B	7B	14	14	14B	14
PUERTO RICO	21	14	7A	7	7	7	7	14	21A	21A	21A	21
SOUTH AFRICA	14	14B	7B	7B	7B	7B	7B	14	21A	21A	21A	21
U. S. S. R.	7B	7	7	3A	7	7B	7B	14B	14	14B	7B	7B
EAST COAST	21	14	7A	7	7	7	7	14	21	21A	21A	21

A = Next higher frequency may also be useful
B = Difficult circuit this period
F = Fair
G = Good
P = Poor
SF = Chance of solar flares

november

sun	mon	tue	wed	thu	fri	sat
			1 G	2 G	3 G	4 G
5 G	6 G/SF	7 F/SF	8 P/SF	9 P/SF	10 F	11 F
12 F	13 F	14 F	15 G	16 G	17 G	18 G
19 G	20 G	21 F	22 F	23 G	24 G	25 G
26 F	27 F	28 P/SF	29 P/SF	30 P/SF		

December 1978 $2.00

73 Magazine for Radio Amateurs

W2NSD/1 NEVER SAY DIE

editorial by Wayne Green

WARC DOOM AND GLOOM

Well, here we are with all sorts of exciting things going on technically in amateur radio, and Wayne Green is preaching doom. One day I'm up on a mountain working with Chuck WA1KPS to make some record-breaking contacts on 10.5 GHz and a couple days later I'm talking to a group of hams at an ARRL convention about the possible loss of most or all of our ham bands.

With the coming microcomputer explosion in amateur radio, the development of packet radio transmissions, the development of practical double sideband systems, and a host of other exciting technical developments, it's obvious that technically things have never looked better.

With the coming International Telecommunications Union (ITU) conference at Geneva next October, never have things looked worse for the allocation of ham bands. I hope, even more than you, that I am just a worrywart ... and it may turn out that my worries are needless.

Having been one of the official U.S. delegates to the 1959 ITU conference (the last full conference), I am quite aware of the pressures on amateur radio allocations at that time. We held our frequencies only because of a miracle. No such miracle seems possible next time.

After a visit to 20 countries in Africa and Asia, I wrote an editorial in *73* outlining what I had found. That was in 1966, and I found that few countries had any real use for amateur radio or any understanding of the value of the hobby to their country. Many were so upset over even the concept of third-party traffic that they were unable to evaluate amateur radio reasonably.

After talking with amateurs in these countries, I came up with a proposal that amateur radio societies around the world try to encourage emerging nations to encourage the use of amateur radio as a way to develop the technicians and engineers so badly needed in small countries. Nothing whatever came of this until I sold His Majesty King Hussein on the concept in 1970 and he implemented it immediately.

In 1971, the ARRL went to the ITU to try to hold on to our ham satellite frequency allocations. There, according to the report in *QST*, they found that the majority of the countries of the world were opposed to amateur radio and they lost every ham satellite microwave allocation we had ... some 237,000 MHz of them. Down the tubes went any hope for worldwide ham communications via satellite other than on the smallest scale.

Once it became clear to me that there was no way that I could get the ARRL or IARU to approach the countries which would in all probability shoot down our allocations at WARC, I tried first with some editorials in *73* to encourage businessmen who were amateurs to carry the ball. Nothing happened.

The only hope that I could see left was to get a group of the people who had the most to lose financially, the ham industry, to take some action. When the FCC actions on linear amplifiers got so ridiculous that something really had to be done, the ham manufacturers did start trying to form an association. They tried to cooperate with the ARRL, but found themselves undercut and sabotaged at every turn by a League in fear of *any* organization other than the ARRL.

Had it not been for the ARRL refusing to cooperate with ARMA, the manufacturer's association, we might not have lost the linear amplifier battle with the FCC. The fact was that amateur radio put on a disorganized response, while EIA had its act together and clobbered us. A large part of the disorganization was directly due to the League counsel and its weakening of the ARMA impact. The ARRL testimony was one of the most inept performances I have ever seen and was so bad the FCC Commissioners were laughing over it.

Yes, I've been an ARRL member for over 40 years, but I still get annoyed at the pitiful leadership amateur radio has to suffer. The "leaders" are third-rate bureaucrats without a hope of achieving second rate. They are protected by a group of directors who, for the most part, are afraid to offend the bureaucrats.

The ARRL likes to pose as a democracy, but they are much more like a dictatorship. Think about it. Members don't get to vote for the officers at all, only the directors ... just like in Russia. The directors (politburo) vote for the officers. A dictatorship is a one-party system, just like the ARRL. Why is there only one party? Because the dictatorship destroys any possible challengers. The ARRL has had a long history of doing whatever it takes to keep any other organizations from gaining strength. Their latest coups have been their jobs on the QCWA and ARMA.

How did they get at ARMA?

Continued on page 112

73 Magazine is published monthly by 73, Inc., Peterborough NH 03458. Subscription rates in the U.S. and Canada are $18 for one year, and $36 for three years. Outside the U.S. and Canada, write for rates. Second class postage paid at Peterborough NH 03458 and at additional mailing offices. Publication No. 700420. Phone: 603-924-3873. INCLUDE OLD ADDRESS AND ZIP CODE WITH ADDRESS CHANGE NOTIFICATION. Microfilm edition—University Microfilm, Ann Arbor MI 48106.

LETTERS

QUASI PRIMA DONNA

Once, as an untutored, not-yet-jaded youth of 15, I had the temerity to write the editor of *QST* suggesting that the ARRL lend "Gil" to the Government of India, where his wretched li'l yo-yos doing all the li'l no-nos could be used to far greater advantage on birth control propaganda posters.

The resulting correspondence has been long misplaced, but be assured, all hell broke loose; as I saw it in 1955, anyway.

Now I freely confess to being a nostalgia freak and, in hindsight, some "Gil" illustrations are their own reward. It was in September of this year, however, that I found that the gates of hell can still be flung open on command, and while they couldn't really do much to a kid of 15, it will really amaze you what can be done to a married, professional fellow of 38.

Right now, you're probably wondering what this has to do with the price of opium in Macao. Stay with me and I shall enlighten you.

When Wayne Green was the editor of *CQ* I thought it was the neatest and funniest magazine in the world. (I was a *very* arcane kid.) After joining the Navy in 1957, *suffering* through ET school at Treasure Island (in the winter), and being assigned to the fleet, I looked forward to my *CQs* every bit as much as letters from my steamy girl friend. Now I realize this sounds bizarre on the face of it, but if you are fortunate enough to know an old-time ham with a storeroom full of old radio magazines, be prepared to see some ham cartoons worthy of the name. It's been years since a sample of this genre has brought much more than a "yeechh" out of me. It also goes without saying that his "jack-em-up" editorials were about the same, but somehow not so pessimistic, and far more entertaining. But we all march to the clock and that, really, is the whole point of what I'm trying to get to.

How emotional have I gotten? Well, I've gotten so emotional that I shot off a hot telegram to Mr. Richard Baldwin W1RU, using not *one* of the seven dirty words, but expressing my feeling strongly.

Please be advised that such a course is not for the fainthearted, but the only fair comparison between me and the late Arnold Stang is glasses.

To get Mr. Baldwin's attention (i.e., to let him know I did not survive by scouring alleys for unbroken pop bottles), I mentioned my company's name and the position I occupy. This was a mistake—whether mine or his is not yet clear.

I am not a member of the ARRL anymore, which is wrong, I suppose, because it puts me somewhat in the position of a rock thrower.

The reason I'm not is simply because the illusion of a retarded bear cub swatting incompetently at a newly found appendage is quite torturous. Allow me to digress.

I am employed by a hallowed, old-line radio company (okay—the first 3 letters of which is the same as hallowed, and deservedly; that's as far as I go) that receives gratis copies of all the ham and related monthlies.

To thine own self be true. I read these on breaks and at lunch—I guess I'll never grow up—and have become somewhat emotional about WARC '79.

I wanted to get his attention to possibly start a dialogue or, more to the point, to do his damn job instead of being some sort of quasi prima donna fiddling while our frequencies burn.

What happened was totally unexpected. The League Pooh-bah is not a Pooh-Bear, he is a Nixonian treasure, and I now have the questionable distinction of being on Richard's enemies list, with a vengeance.

A. On Saturday, September 16, I got a *personally-dictated letter* from W1RU telling me he "does *not respond* to correspondence personally calling him a son of a bitch"—which was not really true. Hang on. The telegram will be printed, regardless of the accuracy or inaccuracy of the statement. (I know the concept here is torturous.) This was the first non-response.

B. I was greeted at noon, on Monday, September 18, with a Xerox copy of a letter guaranteed to catch fire when exposed to light, written by W1RU to the President of my company, the text of which I cannot relate verbatim, presented by my boss.

W1RU pulled out *all the stops* to get me fired in the sleaziest, most innuendo-peppered misuse of personal power I have ever had the misfortune to read. The very inaccuracy and overkill of the attempt, in our times of universal free-ha-ha, literally saved me. I am truly fortunate to work for some fine, decent human beings. This was the second non-response.

I guess this is where I should say that, gee, it's only a hobby, folks. But it's much more than that. I've been caught up in the mystique and adventure of ham radio like few others. I personally feel that the Arabian nights I have spent over the warm smell of communications equipment, listening to and talking with people the world over, and looking out of my window at the starry early-morning sky, have shaped my personality. I truly don't know what I would have done in the 1800s—my great-great uncle was a renowned gunfighter (Will Stokes), but I don't think that would have been my calling. It's just lucky to be here today, with the apparatus existent to fly your fancies according to your innermost, gut-wrenching needs.

Now, to that telegram. Being worked up over losing all this to a bunch of people who don't even have the wherewithal to utilize it, I said:

> If Wayne Green's September editorial is even 10% correct, you SOBs should be dismembered and thrown to a pack of wild dogs.
>
> Terry Staudt WØWUZ
> Company Title

This is a good old Colorado saying used sparingly to express true disgust. There is also some humor there that evidently loses itself when put in print, especially to plastic people of the job set.

I sincerely hope, as does Lew McCoy, Wayne, and Johnny Johnson, that the ARRL gets its act together in time to properly present our incomparably-just cause.

Terry Staudt WØWUZ
Ft. Worth TX

TAKE A LICKING?

Many of my friends are "wheels" in CCIR, URSI, IEEE, etc. Just two weeks ago there was an international meeting of URSI (Intl Sci Radio Union) in Helsinki. One of my old college buddies is a commission chairman (in charge of matters relating to radio noise, man-made and natural). He told me, in passing, that he's afraid the hams are going to take a licking at WARC—something similar to what Wayne has been writing about. This friend of mine had recently talked to Dick Kirby. In fact, he had put together a panel wherein Kirby and several other spectrum managers talked. Also, my friend last year edited an entire IEEE volume on spectrum management, including articles on WARC.

Well, I happened to telephone the ARRL the next day and asked to speak to the guy in charge of WARC relations. It turned out to be Bruce Johnson, whom I don't know. Anyway, Johnson assured me that my friend (who's worked as a radio engineer for Stanford Research Institute for 20 years . . . and has had very close contact with CCIR, etc.) is all wrong.

Also, Johnson had never heard of URSI! He wasn't sure he'd heard of the IEEE Spectrum Management group. The ARRL had turned down Stanford Research Institute's proposal to do a study for the ARRL which could also be used by third-world countries to support ham needs in the HF and VHF spectra.

Johnson was also sure that anything that goes on at international meetings such as URSI can't affect WARC since all countries have already decided on their plans. (This is B.S., since many third-world countries are in limbo.)

In any case, the message I got was that the ARRL is all set. They know all that's worth knowing, and guys like me, who worked for the National Bureau of Standards CRPL back when Johnson was in grammar school, are to be tolerated but not listened to.

By the way, W1FYM just told me that Bruce Johnson had promised to join us for our 1978 Field Day QRP-computerized operation. Two days before Field Day, W1FYM asked about Johnson and somebody at the ARRL told him, "Oh, Johnson's not going with you guys. He had the chance to go to Pennsylvania and work Field Day with some *real* big shots. . ." Johnson didn't even bother to tell us.

Plus ça change. . .

C. Stewart Gillmor W1FK
Higganum CT

SRRL?

I'll preface the following with the fact that I have been a member of the ARRL for most of my 22+ years as a ham. Have you heard about the latest attempt to set up a dictatorship by the Board of Direc-

tors of the League? It was bad enough when they stripped Mary W7QGP of the right to run as Washington SCM. Now they have taken on the entire League membership of the Northwestern Division: Alaska, Idaho, Montana, Oregon, and Washington.

In case you did not hear about the latest news from Newington, here goes: Mary was to run against the incumbent, Bob Thurston W7PGY, for Director. It seems that the Executive Committee decided against allowing the members of the Division to democratically decide who is the better candidate. Instead, they "postponed" the election and gave W7PGY the position until after the election is "decided." The election has been postponed until the current litigation between Mary and the League is completed. If that litigation takes another two years, then Bob Thurston will have been the *appointed* Director for his entire term of office!

I wrote to Dick Baldwin, but do not expect any answer, unless it is a form letter. I will *not* resign from the ARRL, as they may not be doing much, but a little is better than nothing with WARC coming up next year. Anyway, to paraphrase the letter to W1RU, "Welcome to the Soviet Radio Relay League!"

Keep up the fight. We need some voices in the wilderness against the fuddy-duddies in Newington, and you do a better job than Cowan does in *CQ*. Oh yes, Wayne. "Looking West" is a good column, but contrary to what Californians believe, there is a lot more to the west coast than 6 Land!

Jerry Ostrer W7EMX
Vancouver WA

ROSE-COLORED GLASSES

I just finished reading a letter to you from Carl Manion W4BDC in the September, 1978, issue of *73*. In his letter, Mr. Manion was highly critical of your stand against some ARRL policies, and of similar policies of the other ham magazines.

I have been reading all of the "big four" ham rags (except *CQ*) now for twenty years, or since the first issue of each respective magazine, and I want you to know that *this* Kentuckian totally agrees with your opinions and especially with your right to express them. Perhaps the reason *QST*, et al, remains silent in respect to Wayne Green and *73* is the old "let's ignore him and maybe he'll go away" theory. Or then, again, maybe it's because they know they have no defense against the truth.

I applaud you and your staff for being the *leader* in ham magazines. There's no doubt about it ... *73* is way out in front. Please don't stop keeping us informed of the *truth*, even when it sometimes hurts.

In closing, let me say that I am sure that for each renewal you don't receive from people in Mr. Manion's league, you will get three or four from those who welcome the truth and don't see ham radio as a wonderful hobby through a pair of rose-colored glasses.

Michael W. Babb N4PF
Louisville KY

ENEMIES NOT NEEDED

Jam 10 GHz police radar? If we lose this band, you will receive a bill for my two Gunnplexers. With friends like you, amateur radio doesn't need enemies. Just because someone writes an article doesn't mean you have to print it.

Steve Noll WA6EJO
Ventura CA

REALLY WEIRD

This reader has held a Class A (Advanced class) ticket since June of 1939 and therefore qualifies as something of an old-timer.

You are correct in that the ARRL has made some mistakes. The first was in not battling the FCC (if necessary) to the end when the Class A subbands were opened to all General class tickets. This problem was remedied when "incentive" licensing was restored, even though this ham lost some privileges until this year when he finally went up for Extra class and upgraded. The other mistake was in not doing everything to prevent amateur licenses which omitted the 13 wpm code test.

There are certainly many excellent technical men with Technician class licenses, but that is not the point. The reader whose letter appeared in your Letters column a few issues ago stating that the code bands will eventually be opened wide to phone simply is too much of a "young squirt" to know the score. No matter how much advancement is made in the art, as the number of hams increase and, hence, increase the QRM, the ham bands will eventually become like the CB channels are today. That is the day this ham will tear up his license. Even the opening of all CW subbands would not prevent this. Developing 13 wpm or more in CW is not that difficult, and, once a ham reaches it, most enjoy CW contacts immensely. When the QRM becomes completely unbearable at some time in the future, the logical move would be to narrow down the phone bands and increase the CW spectrum such as we had when the entire 40 meter band was CW only. In this way, ham radio will continue successfully—especially with the terrific new CW filters on the market.

Wayne, despite the mistakes of the ARRL, some of your counter-proposals are really weird! Not all, but some. Lay off the ARRL, but continue your suggestions, if you desire.

John B. Broughton AD4I
Charleston SC

SEMANTICS

The recent article, "New Life for Double Sideband?", deserves some comment. This article was in the August, 1978, issue of *73*.

First of all, the author is engaging in semantic exercises when he says that the carrier of an AM signal is not changed by the modulating process. It is true, of course, that mathematical analysis and a spectrum analyzer will show that the carrier is unchanged when modulation occurs. Nevertheless, examination of the modulated wave on an oscilloscope clearly shows that the amplitude of the output wave does vary with the audio input. Whether or not you call that the carrier or not is up to the reader, but amplitude variation of the output certainly does occur. Similarly, in FM, the frequency of the output wave certainly varies, while the actual carrier frequency itself remains constant, and varies in amplitude. Again, the whole thing depends upon the definition of certain terms. In my view, the original 1976 article by K1IO on this subject created more confusion than it cleared up.

Similar semantic problems occur in the author's discussion about the detection of DSB. Most authors of texts in communications theory use the terms "synchronous, product, and coherent" to mean the same thing in describing detectors. Also, the author of the article in question says that a product detector only works with SSB. This just isn't true. Both theory and practice prove that a good product detector works well on AM, and I have used my product detector for years to pick up AM. Actually, a good product detector will dig AM out of the noise when a regular envelope detector won't do the job. Also, a simple product detector *will* work on DSB, and most authorities agree that understandable speech will come out of such a detector even if the inserted carrier is as much as 30 Hz away from the proper value. Actually, the carrier can be derived from a DSB signal by a process of squaring, filtering and frequency division, without use of the PLL, although the PLL is probably the best method.

In another word error, the author says that an AM detector is nothing but a mixer. This is wrong, since to mix something you need at least two inputs, and an ordinary AM detector has only one input. Here again, the meaning of words is involved.

At least five stereo AM systems have been proposed, each with its own advantages and disadvantages. Whether or not these will prove to be successful depends on many economic and technical factors, as the author points out.

James N. Thurston W4PPB
Clemson SC

COMMUNICASTING

Just as early experimental work performed by amateur radio operators evolved into the broadcasting Industry, so, too, may a new service evolve called "communicasting." Based on experience from amateur radio repeater operation, a petition was filed in January, 1977, by WA2RPC of the Center for Advanced Study in Education of the Graduate School of CUNY with W2KPQ for a new "Community Educational Radio Fixed Service" (RM-2846). This service would employ the communicasting concept.

Communicasting utilizes a low-power community repeater station which can transmit audio and video signals a distance of thirty miles or more from a high antenna. Signals can input the repeater from many parts of the community and the output can be transmitted on an unused UHF TV channel for anyone to receive. The petitioners and others filing comments had additionally requested that these low-power facilities be exempted from conforming to rigid broadcast standards in order to minimize costs.

In a recent "Memorandum Opinion and Order" on RM-2846, the FCC praised the communicasting concept and made it part of a broad "Inquiry into the Future Role of Low-Power Television Broadcasting and Television Translators in the National Telecommunications System" (Notice of Inquiry in BC Docket No. 78-253). The FCC stated that, "The petition and comments by others

Continued on page 102

RTTY Loop

Marc I. Leavey, M.D. WA3AJR
4006 Winlee Road
Randallstown MD 21133

How did the old song go, "Letters, we get letters . . ."? Well, so do I, and this month I'll dip into the mailbag and see what kind of items are brought forth.

Chris Sheridan, of Yonkers, New York, sends along a tape and notes that the printing on the tape shifts from letters to figures, but that the transmitted print appears correct. In order to diagnose this problem, you must be able to read the perforations directly on the punched tape. Teletype® has been nice and standardized the format in which the tape is punched. Looking at the tape from the top, perforations are for bit 1, bit 2, sprocket, bit 3, bit 4, and bit 5. Furthermore, typing reperforators put the typed character six places behind the punched representation. Looking at the tape that was sent (I'm sorry that there is no way to reproduce it for publication), the printing reads: "WEL 8:-))3?'.6". Looking at the perforations, one sees that what should have been the second "L" of "WELL," 01001 binary, has been changed to 11011, presumably by a noise pulse. This is the code for FIGURES and was responsible for the shift in case on the tape. I assume that your page printer is equipped with the "downshift on space" feature that returns the carriage to LETTERS after a space. Thus, the space after the "WEL" would have returned printing to the normal mode.

Chris also asks three questions echoed by many other hams, with details only slightly changed. He wants to know:

1. Do you recommend the Kenwood (he has the TS-520) or, to you, which is the best receiver/transmitter to use for RTTY?
2. Is the HAL ST-5 good, or should I try for a better unit?
3. Do you have any recommendations for a linear?

Being of a conservative and frugal nature, the answer to your first question, to me at least, is obvious. If you have a station that works on SSB or CW and you can get it on RTTY, *use it*! There probably is no "best" RTTY rig any more than there is a "best" SSB rig or "best" two meter FM transceiver. If there were one clearly superior rig, it would quickly eclipse all others on the market. The presence of variety provides for an individual's taste, and what is great for you may be rotten for me, and vice versa. Similarly, to those of you using inexpensive demodulators, such as the HAL ST-5 or Flesher 170, as long as they perform within your expectations, use them! It will become painfully obvious when you try to do more than these otherwise fine units can do. There is no reason to discard a perfectly good piece of equipment merely because it does not meet someone's arbitrary description of "the best." I'm going to punt on the linear question. I don't use one myself, but I guess like anything else, any clean linear that can be run key-down, all right with decreased specs, is fine. Get what you can afford that will make you happy. I hope that kind of puts the philosophy of equipment procurement into the proper perspective.

While it's not strictly RTTY, I'm a sucker for DX requests, and from a fellow physician, I find it hard to refuse. P. P. Kurlan, M.D. VU2PP, needs help in setting up an SSTV rig in India. He notes that he is particularly interested in an Atlas 210X or equivalent, and something on the order of a Robot 400 converter. Anyone who can help is invited to write him at: Dr. P. P. Kurian MBBS, MD, Kelachandra Medical Centre, Chingavanam-686531, Tf. Res. 396, Hosp. 334, Kottayam Dt. Kerala, S. India.

While we're on the subject of help, all you whale lovers may be interested in a request from the Greenpeace Foundation of America. They need help in getting an LO15C Intelex Systems teleprinter on 60 wpm. Richard Dillman N6VS notes the machine was made by Standard Elektrik Lorenz, AG. Write him at 240 Fort Mason, San Francisco, CA 94123, if you can help. The whale will thank you, I'm sure.

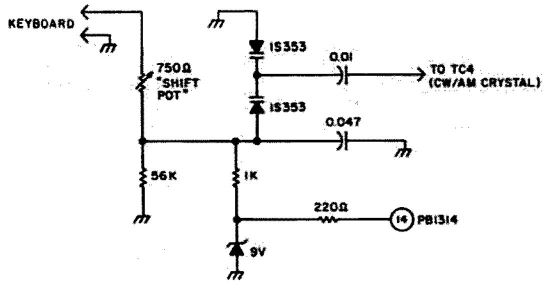

Fig. 1. FT-101B FSK.

For those of you within the sphere of influence of Harrisburg, Pennsylvania, I have a note here from Bob Marzari WA3AVX about the WR3ACO RTTY repeater. It seems as though the machine has just had its second birthday, and the "parents" celebrated by equipping it with a new machine. With a Super Stationmaster at 1600 feet above sea level atop Blue Mountain, and 25 W erp, the signal covers the surrounding area well. Digital input and output is provided by a system built by local hams. Bob tells me that they are planning a link with the Eagleville, Pennsylvania, repeater, northwest of Philadelphia. This sounds like a super idea, and with the possibility of ASCII lingering as of this writing, RTTY repeaters could become the first step to turning any RTTY station into a computer terminal.

Somehow, it wouldn't seem right to have a column without at least one diagram. This month's is provided by Dick Beagell WD8CEB. Dick notes that by carefully following the directions given in the manual for the Yaesu FT-101B, RTTY could be generated. Only one problem: It was upside down! Fig. 1 is the circuit Dick came up with. He notes that, as in many other keyer circuits, the keying contacts must be "dry," that is, outside of the loop. This means that in order to get local copy while transmitting, usually a good idea unless you are a perfect speller, you should either use a polar relay to key the transmitter, or a magnetic reed relay, as described here several months ago. Dick says that adjusting TC4 and the shift pot should allow 170-Hz shift without any problems. He built his on a small terminal strip and mounted it to the "FIXED XTAL" board on top of the VFO.

Does anyone know what ever happened to the *RTTY Journal* and the New Jersey *Green Keys*? Several readers have written to say that they cannot get mail to these publications and wonder if they still exist. I don't know, myself. Do any of you?

Many, many, many readers have asked me a variation of the "Where can I buy a frammis zacher?" question so, somewhat against my better judgment, I have decided to pass along that information about RTTY sources that crosses my desk. Van W2DLT runs a joint known as Teletypewriter Communications Specialists. They sell and rent just about anything in Teletype, Baudot, Murray, ASCII, or what have you. See their ad in *73* or *Kilobaud*, or drop them a note at 550 Springfield Avenue, Berkeley Heights NJ 07922. Another outfit, Typetronics, reachable at Box 8873, Ft. Lauderdale FL 33310, sends along an eight-page list of equipment available. It appears they have machines, parts and accessories for Teletype and Kleinschmidt machines. I'm sure they would be happy to send you a list, too!

A tip of the hat to Bill Bennett K3TNM, Bill Richarz WA4VAF, and Ric Cooney WB3DJV, all of whom have let me know that the RTTY receiving program published here in July is up and running at their stations. In answer to their, and others', questions, modular sending and stunt-box programs are under development, and will be published as soon as I am 100% convinced that they are bug-free. For those still having problems with that program, the one bug that creeps up with fast terminals has been patched, and the program should work with any terminal of 300 baud or faster. The updated source listing (Ver. 3.1) is still available for an SASE and one dollar to cover copying costs.

Other hams have let me know there is a wide range of equipment in use out there, from the most elementary to highly-sophisticated microprocessors. We've heard from Model 15s and Digital Group stations. I'm still compiling a list of what you send in, and when it looks presentable, I'll let you all in on it . . . right here, in RTTY Loop!

Ham Help

Where can I obtain a continuity tester that produces an audible tone which changes with resistance? I am presently using a bell taped to a battery, but of course this does not provide the information a variable tone would.

What I had in mind was something like a conventional VOM, but with a small speaker to give an audio clue as to what the needle was doing.

Roger Deran
21 Betty Drive
Santa Barbara CA 93105

Looking West

Bill Pasternak WA6ITF
24854-C Newhall Ave.
Newhall CA 91321

Last month, we left you with quite a cliff-hanger. We had our favorite repeater, "WR whatever," as the target of malicious Interference by a known, self-confessed, publicly-identified repeater jammer. We had set some ground rules which stated that no violent means could be used to combat this problem. Also, In our hypothetical case we had stated that our "good guys" had tried every method of obtaining relief from the situation through the FCC and other agencies—to no avail. How would you handle it?

By the way, for those of you who might doubt that abuse of our relay systems can manifest itself to an extent such as outlined, may I suggest that you stop here for a moment and grab your October *73*. In it you will find a story entitled, "The Ultimate T-Hunt," by Bob Thornburg WB6JPI. Read it; it will tell you quite explicitly the length to which a person apparently filled with hate toward either a repeater or repeater licensee will go in an effort to make this "hate" known. The article breaks down into dollars and cents the cost that such willful, illegal, and malicious interference can have for us. Having lived through the days of what I term "Jambox I," I consider that act and all acts like it to be a direct assault upon the Integrity of the amateur service and each one of us. In the end, no matter what method is used to handle each Individual case, the cost comes out of our own collective pockets. Read or reread "The Ultimate T-Hunt," and then continue reading this article.

The obvious next question is, is there a solution? Is there a way that amateur radio can rid itself of those from within who seek to destroy us? Last month, I intimated that such a way might exist, though I cannot personally take credit for developing it. The views you are about to read are those of an amateur who is also a very competent attorney. His name is Joe Merdler N6AHU. Joe came up through the ranks, so to speak, starting with CB radio and moving up to an Advanced Class license within the short period of a year. Joe is an avid low-band DXer who also enjoys VHF FM on both 2 meters and 220 MHz.

When we were putting together the "First Annual VHF/UHF Band Planning, Voluntary Coordination, and Technical Advances Seminar" for the ARRL National Convention, we realized that one topic of extreme importance rarely covered at these meetings was dealing with just such cases of malicious interference. I knew how devoted Joe was to trying to curb this problem, and how he was trying to use some of his expertise to help guide others in this regard. Therefore, Joe was considered to be an ideal speaker on the topic. He was invited to take part In the seminar; the following is a transcription of his talk:

"The title of this talk Is 'Malicious Interference: What Can You Do?' I would prefer to title my brief statement, 'Now That You Have the Tiger by the Tail, What Do You Do?'

"The jammer poses a unique problem to the VHF user. We have found through experience that, in most cases, the FCC or perhaps other governmental agencies charged with enforcing the various codes will not proceed In cases of malicious interference (to amateur communication). There are ways of getting around this. I would like to point out a few suggestions based on the cases I have been Involved with. I got involved because I don't know how to say no. My friends got involved and said that they needed help. When you start dealing with government agencies, taking statements, and wanting signed statements, people become scared.

"The tracking down and DFIng of a jammer I won't go into, but It does have legal ramifications. An incident occurred last week in Los Angeles, on a very, very popular repeater. An individual was caught jamming. A group of men drove up to his yard. They (the T-hunters) rang his door bell; the door bell came out over the air. The jamming Immediately ceased when the door bell was rung. Later, the purported jammer called the repeater owner and asked him to 'call off your boys.' They had just slashed the four tires on the jammer's truck.

"Now, the first reaction that one might have is: 'That's good.' Somebody's going to get his comeuppance. However, that statement gives rise to many statements legally. Is the repeater owner responsible for the acts of his users? Is an 'association' or club that sponsors or aids in the upkeep of a repeater responsible because someone goes out and slashes

Joe Merdler N6AHU addresses seminar at San Diego.

the tires of someone who has been 'announced' as being a jammer? It is my feeling that, and I am actually doing It for this one particular repeater, the best thing is to form a nonprofit corporation. Any activities such as DFing, T-hunting, or any activities involved in tracking down the offenders, releasing information, etcetera, will be handled through this nonprofit corporation. The purpose is that we are volunteers. We are in a hobby for fun. What happens if you make a statement on the air and a 'guy' says prove it and sues you? Liable and slander laws do apply, and while most people only threaten, once in a while you find someone who will really go through with It. What happens when you are sued? Legal fees are not cheap. The costs of legal fees, filing fees, deposition fees—those items add up quickly. Quite frankly, It can break an individual.

"When you get into court, you never know who is going to win. In my opinion, It is generally the attorneys. I have to be quite frank about it. In my practice I try to avoid litigation where possible and will discuss with clients from a standpoint of practicality what to do in a lawsuit. Really, you get very few clients who can afford to fight as a matter of 'principle.'

"How do you protect yourself and the users of your repeater? For example, I was involved in a case. There was an announcement made (about the matter). I should point out that I was only involved actually in coordinating (the matter). I did not do any of the DFing. I played a very small role in it. In actuality, I provided advice. There was a well-known Individual whom we have decided to call 'W6JAM.' Those of you outside the Los Angeles area may not have heard about this individual. The most fouimouthed individual I have heard. Almost made me want to take the two meter radio out of the car. It turned out to be someone I thought was a friend.

"It created all types of problems. What do you do if the federal government refuses to act in a case such as this? How can you make an announcement to let other amateurs know that this individual is the jammer? How can you make these statements and do these things without exposing yourself to liability? It is my opinion that a day Is coming when perhaps the repeater councils should Incorporate as nonprofit corporations so that the Individuals working on behalf of such repeater councils can go ahead and make statements or publish press releases (on such matters) and not worry that they as individuals making such a press release or participating In such matters might be exposed (to individual liability). You can insure a corporation far more easily than an individual (against such liabilities).

"Another thing It can do is permit such a corporation to go into court on such matters. WESTCARS tried It, but I think they tried it in state court. I think that was their downfall. They should have gone to federal court; however, that is second guessing. This Is one avenue in stopping the problem.

"What it is going to take is some jammer being prosecuted and placed in jail. How do you get the federal government

Continued on page 124

DX

Chuck Stuart N5KC
5115 Menefee Drive
Dallas TX 75227

Here it is December already, and it appears that good old Saint Nick will be bringing plenty of exotic DX to the deserving. Of course, there is no need to ask if you've been good or not. That just comes naturally with being a DXer. You are one of the chosen few.

A couple of months back, in the October column, we laid out our ideas and plans for what we hoped to be able to do with this column. This included a monthly DXer profile, lots of pictures, stories on the latest DXpeditions, and much more. Mostly, we want to give you something we feel has been missing in the DX columns presently available—a column with pictures and stories about the DXers rather than the DX. Of course, we will continue to keep you up to date on "what's happening," but it's the personal side we're looking for.

To do this, we need your help. Let us hear from you. Tell us what we are doing right and what you feel could be done better. Send pictures of yourself and your station. Black and white or color—we can print either one. Let us know whom you would like to see in the DX Profile. We need lots of input from the readers. The more input we receive, the better job we can do and the better the column will be. Merry Christmas.

DX PROFILE

This month's DX Profile is on one of the best known and most popular DXers around, Lenny Mendel K5OVC.

Lenny first became interested in amateur radio while attending a technical vocational high school in New York City. He was first licensed while still a junior in high school in 1945, but due to the war, he received no call at that time. By the time Lenny graduated from high school, he had earned a commercial radiotelephone license as well as first and second class radiotelegraph licenses. He had also received the call W2OVC.

After a hitch in the Coast Guard as a radio operator aboard a Coast Guard cutter and a short tour as a commercial radio operator on a seagoing tug, Lenny joined the sales staff of Harrison Radio in New York City.

In 1951, Lenny joined the New York City Police Department and became a member of the Elite Emergency Squad. Today this department is known as SWAT. If there is a better training ground for the twenty meter wars, we can't think of one. In 1971, he retired, completing twenty years of service.

1972 was not one of Lenny's best years. He was sued by five of his neighbors for a cool one million dollars. They not only claimed TVI, but charged Lenny with maliciously operating his radio and causing severe damage to their health from staying awake all night waiting for his tower to fall on their heads. The case made it all the way to the New York State Supreme Court before it ended without the neighbors getting a cent. Lenny and his wife Norma feel that they never could have made it through this period in their lives without the moral and financial support provided by their many friends.

Lenny Mendel K5OVC, as a member of the New York City Police Department's Elite Emergency Squad. He seems to be saying, "What do you mean I'm not in the Clipperton log?"

It was during that time that Lenny became good friends with Bud W5WZN and several other Arkansas DXers. When the Arkansas DX Association held a special meeting for Ahmed AP2AH, Lenny and Norma decided it would be a perfect time to visit Arkansas and meet some of their many friends in that area. After a short visit, during which time they fell in love with Hot Springs, Lenny and Norma put their New York house on the market and moved to Arkansas. Lenny does admit, though, that before they signed the papers on their new home, he set up a rig in the driveway just to make sure he could get out okay from that location. Now there is a man who has his priorities straight.

Lenny says that DXing from Arkansas is just great. You have a good shot to Asia and the Pacific, but it gets a little rough toward Europe. Regardless of the conditions, Lenny has earned 5BWAS, 5BDXCC, Single Band WAZ, and is waiting for cards from 6O1FG and HZ1BX/8Z4 to bring his confirmed DXCC total to 319 countries.

Lenny's equipment includes a Drake T4XC, R4B, and a Henry 2k linear. Antennas consist of a KLM 5-element Big Stick on twenty and a Wilson Duobander for ten and fifteen.

Lenny and his wife Norma, a native of Wakefield, Mass., have three children. Ken is a doctor at Columbia Presbyterian Hospital in New York City. Kathy Ann teaches eighth grade in Humble, Texas, and the youngest, Jo-Ann, is a junior at Lake Hamilton High School who plans to become a lawyer. None is interested in amateur radio.

Lenny is one of the real gentlemen in a highly competitive hobby. The next time you hear K5OVC on the air, give him a call. You'll be glad you did.

DX NOTEBOOK

Nigeria—5N2NAS

Ron Veelik WA6LTH forwarded a letter he recently received from Kunie 5N2NAS, secretary of the Nigerian Amateur Radio Society, explaining the present situation concerning amateur radio operation in Nigeria. In November, Emergency Regulation Decree No. 24 of 1966 was lifted. Prior to this, it was unlawful to bring amateur radio equipment into Nigeria and few if any new licenses were being issued, especially to foreigners. Now, with the lifting of Decree No. 24, it is again possible for foreigners to obtain operating permission. If you are interested in operating from Nigeria, write to Oyekunle Ajayi, Nigerian Amateur Radio Society, PO Box 2873, Lagos, Nigeria. Tell them when you are coming, how long you plan to be there, and where you will be staying. If you stay in Apapa or Lagos, you can receive permission to operate from the club station, 5N2NAS. Present club members are 5N2AAJ, 5N2AAE, 5N2AAK, 5N2AAV, 5N2ESH, and 5N2NAS. Kunle states that the NARS members are vitally interested in WARC '79, and he feels that we need well-disciplined radio amateurs around the world to justify the use of our old and new frequencies.

Sable Island—VGW-211

The ARRL has refused to accept contacts with VGW-211 for DXCC credit, citing DXCC rule number 6 as the reason. Rule number 6 states that "All contacts must be made with amateur stations working in the authorized amateur bands or with other stations licensed to work amateurs." The discredited contacts were made August 8th and 9th. Later contacts made while the station was signing VE1MTA are acceptable.

Thailand—HS1AIV

"Chester" XV5AC from a few years back has returned to southeast Asia and is now signing HS1AIV. Located in Bangkok, Chester has all the equipment from XV5AC and then some. In addition to full kilowatt amplifiers, he has stacked ten meter beams, stacked fifteen meter beams, two TH6DXXs, and the big Telrex six-element twenty meter beam. On the lower bands, a two-element forty meter beam and phased verticals on eighty do the trick. Chester also reports room for a 160 meter antenna and plans to do a lot of operating on the lower bands this winter. Chester will be there for a least four years and has plans for a few multi-multi contest efforts as soon as he has the station set up to his liking and all the bugs worked out.

Sri Lanka—4S7

There are presently two list-type operations involving 4S7 stations. 4S7EA meets WB9OQU Monday and Wednesday on 14247 at 2330Z. QSL to WB9OQU. 4S7JD meets

Continued on page 74

Editor:
Robert Baker WB2GFE
15 Windsor Dr.
Atco NJ 08004

CONTESTS

ARRL 160 METER CONTEST
Starts: 2200 GMT Friday, December 1
Ends: 1600 GMT Sunday, December 3

The annual ARRL 160 Meter Contest is open to all amateurs on CW only. Multi-operator work is permitted and scores will be listed separately in the results, but they will not be eligible for certificates.

EXCHANGE:

RST and ARRL section or country.

SCORING:

QSOs with amateurs in an ARRL section count 2 points; QSOs with amateurs not in an ARRL section are worth 5 points. DX-to-DX QSOs do not count. Multiplier is the total number of ARRL sections (74), VE8, and foreign countries worked.

AWARDS:

Certificates will be awarded for section and non-W/VE country high scores. Division high scores will have their section award endorsed with an appropriate seal.

FORMS:

It is suggested that contest forms be obtained from the ARRL, 225 Main St., Newington CT 06111. Checksheets are not required, but a penalty of 3 additional contacts will be made for each duplicate contact.

These rules were taken from last year's contest. For complete rules, see the November issue of QST.

VU2 DX CONTEST—GARDEN CITY CONTEST
Starts: 1200 GMT Saturday, December 2
Ends: 1159 GMT Sunday, December 3

The Bangalore ARC and the Viswesvariah Industrial and Technological Museum invite all amateurs to participate in the contest this year. Only two bands are specified, the 20 and 40 meter bands for all contacts, on CW only! Only one type of entry is permitted, single operator. A station may be worked once on each band; VUs may contact other VUs. Valid points can be scored by contacting stations not in the contest provided complete RST exchanges are made and logged. VU stations will work the world and vice versa!

EXCHANGE:

RST and serial QSO number of three digits or more.

SCORING:

Each completed QSO counts one point, with the following multipliers: Power-output multipliers—10 Watts and below = 5; up to 50 Watts = 3; above 50 Watts = 1. DX multipliers—Asia = 1; Europe, including UK, Africa, and Australia = 2; North and South America = 3.

Note: For all Islands contacted, for the purpose of multipliers, the nearest continent/mainland will be taken into account. Contacts with maritime-mobile or aircraft-mobile stations do not qualify for DX multipliers. Contacts with other portable or mobile stations count as fixed stations.

ENTRIES AND AWARDS:

All entries must be postmarked no later than Dec. 31, 1978, and addressed to: Bangalore Amateur Radio Club, VU2ARC, PO Box 5053, Bangalore, 560 001 India. There is no entry fee, and the entry must be a true copy of the actual log for the contest period. Three prizes will be awarded to the three highest scorers. A special award will be given by the Federation of Amateur Radio Societies of India. All DX stations who contact 20 or more VU2 stations will be issued a "Garden City Cer-

CALENDAR

Dec 1-3	ARRL 160 Meter Contest
Dec 2-3*	International Island DX Contest
	TOPS CW Contest
	VU2 DX Contest
	Alexander Volta RTTY DX Contest
	Telephone Pioneers QSO Party
	EA Contest—Phone
Dec 2-4	Connecticut QSO Party
Dec 3	Flatland Farmer 10-X QSO Party
Dec 9-10	ARRL 10 Meter Contest
	EA Contest—CW
	HA-DX
Dec 16-17	SOWP Christmas CW QSO Party
Dec 24	HA5-WW
Jan 1	ARRL Straight Key Night
Jan 6-7	ARRL CD Party—Phone
Jan 13-14	ARRL CD Party—CW
	ARRL VHF Sweepstakes
Jan 27-28	ARRL Simulated Emergency Test
Jan 28-29	Classic Radio Exchange
	French Contest—CW
Feb 24-25	French Contest—Phone

* = described in last issue.

RESULTS

RESULTS OF THE 1978 FRENCH CONTEST
(Listed by call, number of points, and number of QSOs)

CANADA

A1	VE3KZ	361030	232
	VE2EHF	72896	113
	VE2WA	66430	70
	VE3BR	21200	53
A3	VE3KZ	516420	349
	VE2OG	201880	206
	VE2AFC	124976	119

TERRE NEUVE

A1	VO1AW	105480	130
A3	VO1AW	5267	25

U.S.A.

A1	W1	W1BWS	13108	48
		W1OPJ	10980	38
W2	A1	W2FAS	100036	118
		W2GKZ	62243	96
		K2PF	12870	39
		N2CM	11284	41
	A3	F2YS/W2	183084	162
		K2PF	360	6
W3	A1	W3ARK	154700	155
		W3HDH	51968	91
		N3RL	6720	28
		WB3DBI	360	6
	A3	N3RL	5500	25
		W3MR	9212	35
		WB3DBI	40	2
W4	A1	N4NX	138240	144
		WB4ENI	10528	39
		W4YN	9360	36
		AA4RR	22854	60
		WB4WHE	120	4
	A3	N4NX	5000	25
		WA4LOF	2381	17
W5	A1	K5UR	20898	50
	A3	K5RF	1000	10
W8	A1	N8BB	82871	108
		W8DSO	11780	38
		W8VSK	5940	27
		WB8WVW	40	2
	A3	K8MN	15640	46
		WB8TGS	490	7
W9	A1	W9OA	56154	115
		K9WA	14490	49
	A3	WA9FZQ	34833	69
		W9LKI	26789	63
		W9TLU	6120	36
		W9SS	9090	30
W9	A3	W9CDC	7364	32

tificate." For QRP multiplier, a signed statement from the local club's secretary or president is mandatory. The ruling of the Contest Committee (VU2ARC/VU2VTN) is final in any instance of doubt.

ALEXANDER VOLTA RTTY DX CONTEST
Starts: 1200 GMT Saturday, December 2
Ends: 1200 GMT Sunday, December 3

Two-way RTTY contacts between stations of the same country are not valid. All 2-way RTTY contacts with stations in one's own zone will count 2 points; those outside one's own zone count for points in accordance with the exchange points table. All 2-way RTTY contacts made on 7 MHz are worth double; those on 3.5 or 28 MHz are worth triple points. Stations may only be worked once per band. A multiplier of one is given for each country contacted on each band. Total score is total exchange points times the total number of multipliers times the total number of QSOs. Italian bonus points are added last—1000 points for each I/IS/IT contact on all bands. Note: Each US, Canadian, and Australian district will be considered a separate country! Exchange consists of message number, RST, and zone. Use one log per band. Logs must be received before Jan. 20, 1979, to qualify (advisable to use air mail). Send logs and score sheets to: A. V. RTTY DX Contest Committee, SSB & RTTY Club, PO Box 144, 22100 Como, Italy.

This contest is open to SWL RTTYers as well, and the same rules apply as used for transmitting stations; a separate results table will be made for these entries. In addition, points and positions achieved in this contest will be valid for inclusion in the "World RTTY Championship" for 1978.

TOPS CW CONTEST
Starts: 1800 GMT Saturday, December 2
Ends: 1800 GMT Sunday, December 3

General call is "CQ QMF." Entry classes for single-/multi-operator. Use the 3.5-to-3.6 MHz band. Look for USA Novices between 3.7 and 3.75 MHz. Use low end of band for DX-CW only!

EXCHANGE:

RST and serial number from 001.

SCORING:

Contacts with own country = 1 point; each call area in W/K, VE/VO, VK, and UA counts as a separate country. Contacts with stations in same continent count 2 points, other

Continued on page 72

RESULTS

RESULTS OF THE 1978 MICHIGAN QSO PARTY
MICHIGAN RESULTS
(Listed by Call, Score and County)

W8PBO	69,040	Macomb	Trophy Winner
K8IF	60,080	Livingston	Certificate
K8RO	48,080	Oakland	Certificate
WB8TRY	36,560	Wayne	Certificate
K8KA/8	35,259	Osceola	Certificate
K8DD	33,456	St. Clair	Certificate
W8LAQ	31,746	Eaton	Certificate
W8JKU	27,744	Oakland	
WD8JOF	20,460	Genesee	Certificate
N8UM	19,992	Washtenaw	Certificate
WB8SLQ	18,312	Macomb	
W8QGP	17,580	Hillsdale	Certificate
WD8CQN	17,353	Genesee	
WB8YWG	17,100	Shiawassee	Certificate
N8UM/8	16,632	Wayne	
WB8MTD	15,080	Jackson	Certificate
WD8ITV	14,899	Macomb	
K8SJQ	14,688	Lapeer	Certificate
WD8LRR	14,460	Genesee	
WB8SVI	14,274	Macomb	
WD8ITS	13,986	Oakland	
WB8ZME	13,542	Macomb	
K8OT	12,660	Saginaw	
K8KQJ/8	12,250	Oakland	
WD8ECT	11,440	Wayne	
W8ETH	9,020	Oakland	
WD8DKM	8,695	Bay	
WD8AAE	7,866	Marquette	Trophy—UP
K8DAC	6,930	Saginaw	Multi-Op
WA8VEB	6,650	Oakland	
N8WW	6,480	Macomb	
WD8QVB	6,407	Macomb	
WA8MAM	5,940	Menominee	Multi-Op
N8RW	4,560	Saginaw	
WD8OKL	4,532	Bay	
WB8ZJL	4,176	Macomb	
N8HT	3,924	Genesee	
WB8BNN	3,478	Van Buren	Certificate
W8HW	3,317	Genesee	
N8MK	3,102	Saginaw	
WD8IKZ	2,997	Oakland	
W8WVU	2,952	Lenawee	Certificate
WB8AUN	2,800	Macomb	
W8WVU/8	2,376	Cheboygan	Certificate
WB8NXN	2,244	Oakland	
WD8OLC	943	Genesee	
WB8LWS	792	Macomb	
K8BWC	595	Saginaw	
W8YL	532	Lenawee	
WA8EFF	496	Macomb	
WD8QNM	442	Macomb	
WA8TOF	300	St. Clair	
WD8NNM	72	Macomb	
K3KX/m8	17,493	6 Cos.	Certificate
W8VSK/m8	3,672	4 Cos.	
WB8FEZ	2,349	Genesee	Plaque (VHF)
WD8LID	144	Lapeer	VHF
WD8KEO	21	Genesee	VHF

CLUB SCORES

1. L'Anse Creuse ARC—266,450 Club Trophy (4th Straight Year)
2. Central Mich. Contesters—62,971
3. Saginaw Valley ARA—36,542
4. Central Mich ARC—31,746
5. Sawyer ARA—7,866

OUT OF STATE RESULTS
(Listed by State, Call, and Total QSO Points)

CAL.	WB6DQR	20	Certificate
CONN.	W1VH	1,848	Certificate
DEL.	W3JZA	640	Certificate
GA.	WB4RUA	2,525	Certificate
ILL.	K9BG	5,032	Certificate
	WB9SMU	3,861	
	W9QWM	2,783	
	K9CW	1,050	
	K9GL	192	
IND.	K9NN	6,996	Certificate
	N9BU	1,029	
IOWA	WBØUCP	4,026	Certificate
LA.	W5WG	1,881	Certificate
MD.	W3BHE	6,630	Certificate
	W3PYZ	6,400	Certificate
MINN.	WA8QIT	7,912	Certificate
MO.	WB3JAP/Ø	1,218	Certificate
NEV.	W7HI	416	Certificate
N.J.	WB2LBV	5,254	Certificate
	N2VA	1,098	
	WA2BYX	96	
N.Y.	N2RT	4,366	Certificate
	WA2OTC	3,422	
	W2EY	980	
N.C.	WD4BEJ	416	Certificate
	N4GF	108	
OH.	WD8CGR	2,889	Certificate
	K8BBH	2,714	
PA.	K3NB	4,433	Certificate
	WA3ZAH	779	
	W3FVU	30	
TEX.	W5KLB	2,002	Certificate
	N5QQ	224	
WISC.	WB9PVI	1,771	Certificate
	K9GDF	765	
	WB9KAR	70	
ONT.	VE3DAP	8,034	Trophy
	VE3CDK	8,000	Trophy
	VE3BR	5,115	Certificate

A DXer's Dream Vacation

—try sunny Montserrat

Alan Adler WB6JPZ
2500 Granville
Los Angeles CA 90064

It was another typical pileup on twenty meters: lots of stations blasting away at the rare one, hoping for that all-important signal report which signifies another successful try. But this time we were at the other end and the hundreds of calls were for us. All we could do after it was over was grin at each other at the thrill of for once being the sought-after instead of the seekers. We were, for eight days, VP2MJE. We had been lifted out of the anonymity of our previous existence as Alan Adler WB6JPZ and Stuart Sokolin W6MJE. For once in our careers as ham radio operators, we were DX.

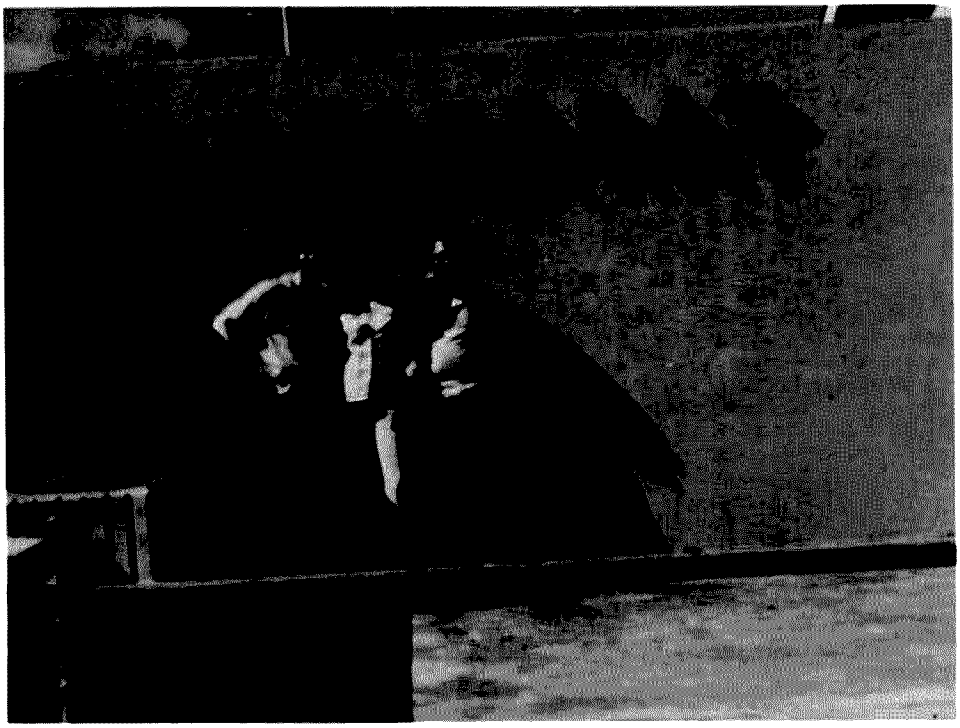

Arrival at the Montserrat airport: Stuart Sokolin W6MJE, left; Ruby Bramble VP2MGB, center; Alan Adler WB6JPZ, right.

The idea for our expedition really started more as a dream or wish rather than a carefully planned and well thought-out expedition. After suffering through numerous DX pileups, we started daydreaming about how nice it would be to go on a DXpedition ourselves. Lacking tremendous financial resources and a great deal of time, we resigned ourselves to more daydream-

ing. We still hoped one day to strike out on a trip to some exotic DX location —possibly some island. Our opportunity came sooner than we expected.

A small ad in the back of a ham periodical told of a house which was available for rent complete with tower, quad, and linear amplifier. The house was located on a small obscure island in the Caribbean, British West Indies. The island was Montserrat, of which we knew absolutely nothing. Everybody we asked about the island also knew nothing about its location or geographical layout. Being intrigued by the mystery surrounding the island, we began to investigate the possibility that this might be a place for our first expedition. We inquired further about how to get to the island and where it was actually located. Travel agencies were no help and we had to do the research on our own. After calling numerous airlines, we finally found a way to get down to the island, which involved the use of three separate flights. After careful research, we decided that this was the opportunity for which we had been searching. Both Stu and I could afford the trip to the island, and we would be able to operate without the hassle of taking along an antenna system or linear. The problem of a rig was solved by using my FT-101B, an excellent rig for traveling. We decided that this was the place to try our hand at being DXpeditioners.

Immediately we wrote to the owner of the house to inquire about the availability and cost of rental and the procedure for obtaining a license. We received a detailed reply from Doc Beverstein VP2MZ, who was delighted with our interest in operating from the island and arranged for us to stay in the house from September 24, 1977, to October 2, 1977. The rent was very reasonable, well below that of a similar stay in the local hotel. Once the reservations were finalized, we set out to organize our forthcoming trip. First, a letter was sent to one of the hams on Montserrat to obtain a license. Here we were helped by Ruby Bramble VP2MGB. She was able to apply for our license under standard reciprocal agreements, and would be waiting at the airport to help us through customs.

We set out from Los Angeles on September 23, leaving for New York at 10:00 pm Los Angeles time. Upon arrival at Kennedy International Airport, we had to wait six hours for

Mountain view on the way to Plymouth, showing typical scenery of the island.

Operating position. Alan Adler, left, and Stuart Sokolin, right.

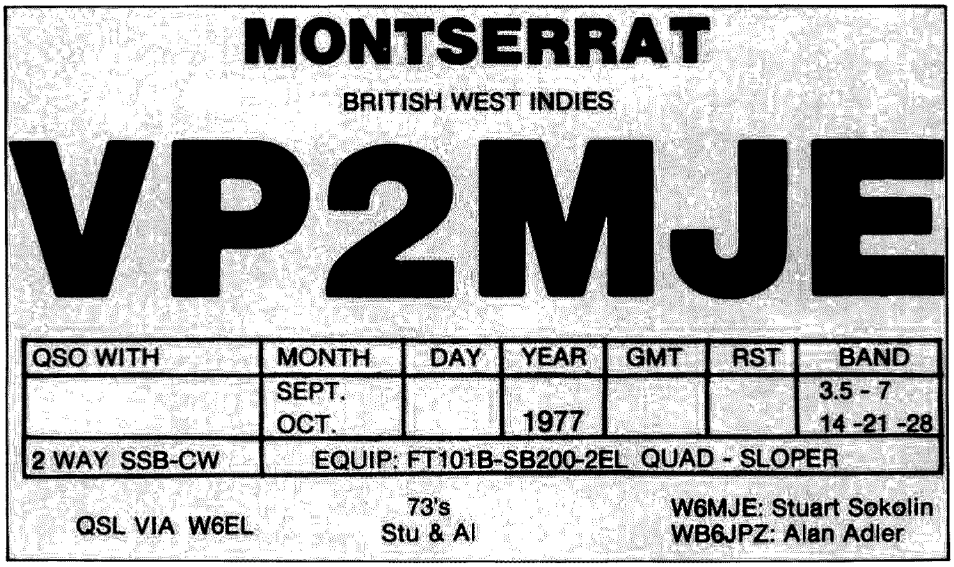
MONTSERRAT
BRITISH WEST INDIES
VP2MJE

QSO WITH	MONTH	DAY	YEAR	GMT	RST	BAND
	SEPT. OCT.		1977			3.5 - 7 14 -21 -28
2 WAY SSB-CW	EQUIP: FT101B-SB200-2EL QUAD - SLOPER					

QSL VIA W6EL — 73's Stu & Al — W6MJE: Stuart Sokolin, WB6JPZ: Alan Adler

Sample Montserrat QSL card.

our connecting flight to Antigua. After arriving in Antigua on a very hot and humid afternoon, we had to wait another four hours for our flight to Montserrat. On our last flight, we crowded into a hot, steamy, ancient DC-3 somewhat reminiscent of a Mexican bus ride, and took off (thankfully) for Montserrat. Fifteen minutes later, we stumbled off the plane, clutching our equipment, and headed for customs. We encountered little difficulty at the customs office once Ruby presented the officer with our Montserrat amateur license.

Our route to the house was short, but strewn with holes, ruts, and other obstacles such as stray cows. The house itself was isolated and surrounded by thick undergrowth topped with beautiful flowers, making a very picturesque scene. The inside of the house was very nice, with a separate living room, kitchenette, and two bedrooms. The ham station was in one of the bedrooms, which had an unobstructed view of the ocean. The house was on a hill overlooking the ocean, and the trade winds from the Caribbean kept the whole house cool. Both Stu and I were overwhelmed by our surroundings. Seeing it all, we decided that life as a DXer might not be so bad after all.

Eager to set up, we piled the equipment onto a table and started to hook up the maze of wires necessary for our operation. Our equipment consisted of my Yaesu FT-101B transceiver, the FV-101B external vfo, the SB-200 linear amplifier, and our portable cassette recorder. Our antennas were a Hy-Gain quad on a 70-foot tower and sloping dipoles for 80 and 40 meters. We had a first-rate island setup.

After an hour of setting up equipment and fixing the sloping dipoles, knocked over by a recent tropical storm, we were ready to make our appearance on the air. In order to generate maximum exposure, we started on 20 meters with the quad pointed toward the United States. The response was astounding. Within seconds of starting operations, we had a tremendous pileup of stateside hams. To be on the other end of a pileup this size was the most exciting ham radio operation that either Stu or I had ever experienced. It was instant popularity!—and quite different than being just another California station. Fortunately, both of us had planned, months in advance, the techniques we would use in handling large pileups, and soon we were handling the callers smoothly and quickly.

In order to assure everybody an equal chance of contacting us, we decided to keep the exchanges to a minimum. For example, during our heavi-

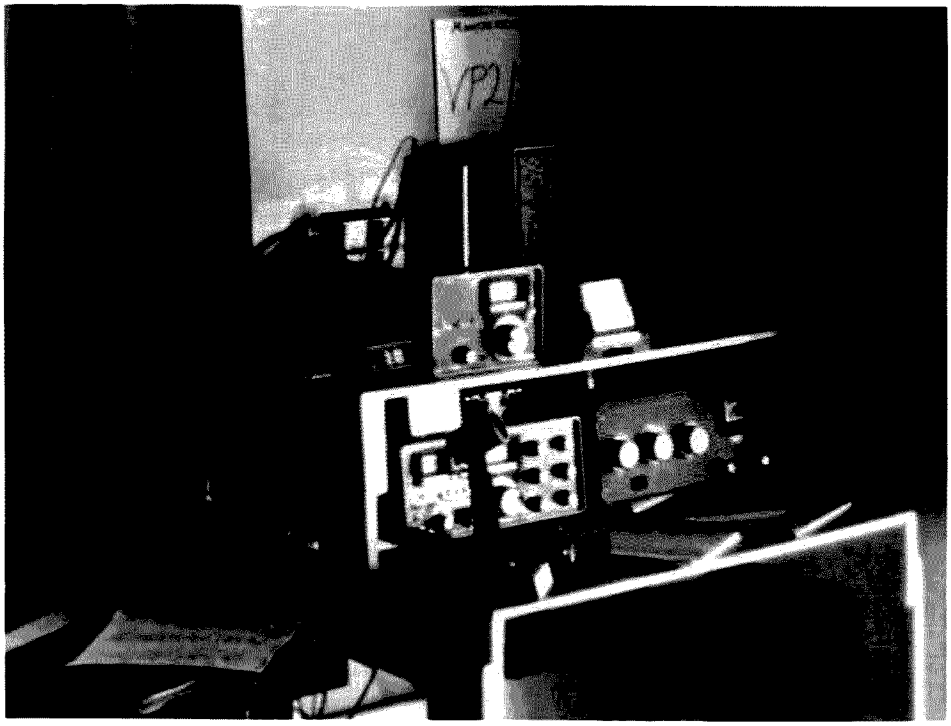

View of operating area. Equipment shown: Yaesu FT-101B, FV-101B, and Heath SB-200 linear.

est pileups we would only ask for callsign and signal report. We would not stand by for anyone's friends at any time, so as to be fair to all hams, and we would not use lists of any kind when dealing with the pileups. In order to give areas of poorer propagation a chance, we took periodic standbys to listen for the weaker stations. The overall operating manners of the stateside stations in pileups were quite commendable. We had very little deliberate interference. The hams would stand by while we were in contact with each station, and there was very little tail-ending. When we asked for standbys to the areas with poorer propagation, we got good cooperation and minimum QRM. Score an "excellent" for American amateurs in our pileups.

The European pileups were much harder to control. The European hams usually did not stand by while we contacted a station, and the interference was much greater. These reactions may have been a result of the language barrier or of a lack of experience in large pileups. Still, we had many good contacts into the European area.

After our hectic opening night of operation, we finally realized that we would need some supplies if we were going to survive a week on the island, so we set out on a mini-expedition into Plymouth, the one and only town on the island. We piled into our small taxi and raced over mountainous roads past beautiful hills and lush green valleys to the main market. Driving in Montserrat is a real experience in survival. First, they drive on the opposite side of the road, as in England. Second, the roads are narrow and rugged, with lots of blind curves and thousand-foot drop-offs. Third, everyone drives as if he were trying to win the Monaco Grand Prix. It's very exciting to see if you can make it to town and back without an accident with another driver or with one of the many large cows wandering about. Planning on a long siege at the radio, we stockpiled such necessities as cases of soft drinks (at an amazingly low 10¢ per bottle), packs of candy bars, eggs, Heineken beers, and other essential foods needed for good health. After loading the car with munchies, we decided to walk around town and do some sightseeing. The village was very quaint and all the people were quite friendly. Upon our return to the house, we decided to see if there was any activity yet on 15 or 10 meters.

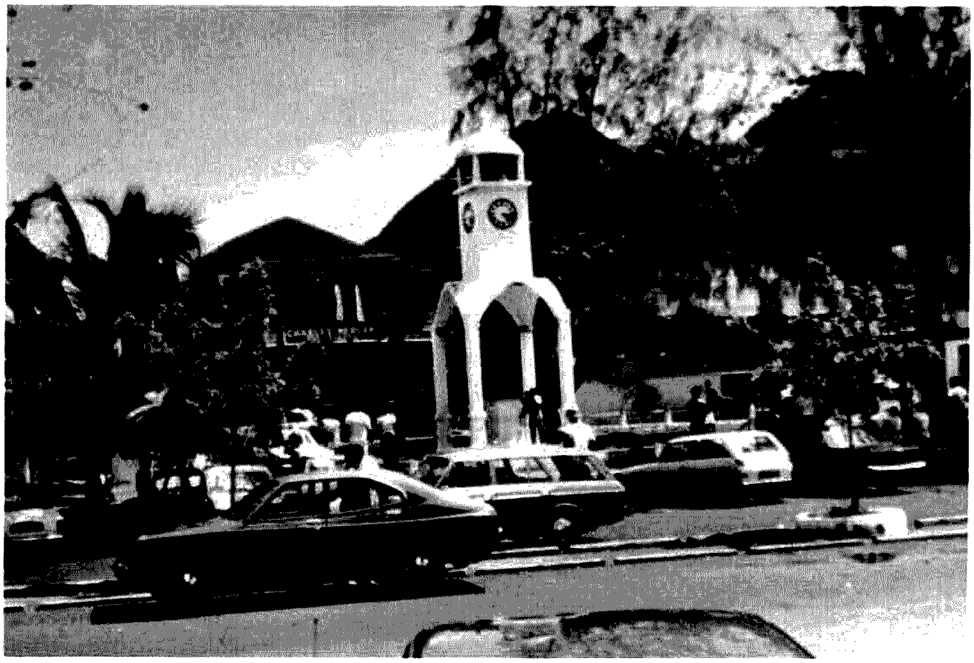

This is a view of the town square in Plymouth.

The pileups on 20 meters seemed like a picnic compared to the response we got on 15 meters. We were inundated with calls from all areas of the United States as well as Canada, and with an equal number of calls from the European stations. We had no idea where to point the quad first, since wherever we aimed the antenna we were barraged with calls. Stu and I took turns operating and logging, trying to work as many stations as possible, but we could not handle all of the response.

We finally had to reluctantly leave 15 meters to take advantage of an opening on 10 meters. I think half of the world followed us to 10 meters. If you think 10 meters is a dead band, just listen to a DX station give one CQ. I believe we attracted every ham within 6,000 miles. We were working stations at the rate of three per minute until a sudden power failure on the island took us off the air. After the power had been restored, we checked the band but found that the propagation had gone down considerably. Taking a quick count of our brief 10 meter debut, we found that we had contacted over 200 stations in about one hour. We had also contacted over 300 stations on 15 for our first try on that band.

Almost collapsing from exhaustion, we stumbled out to our patio overlooking the Caribbean and revived our spirits with several cold drinks from our spacious, well-stocked refrigerator. The life of a DXer can truly be grueling, we thought, as we relaxed on the front porch, enjoying the cool trade winds. Then, gathering courage, we went back into the shack and looked at the log to see how many extra QSL cards we would have to fill out for our moment of glory. Sobered by the thought of increased writing, we decided to concentrate on our two expedition goals: first, to obtain enough countries for DXCC; second, to work all states.

Shunning massive pileups for the moment, no matter how ego-gratifying, we exerted all our efforts toward obtaining a maximum country total. We tried 40 meters for nighttime DX, but found the band cluttered by broadcast stations, making communications impossible.

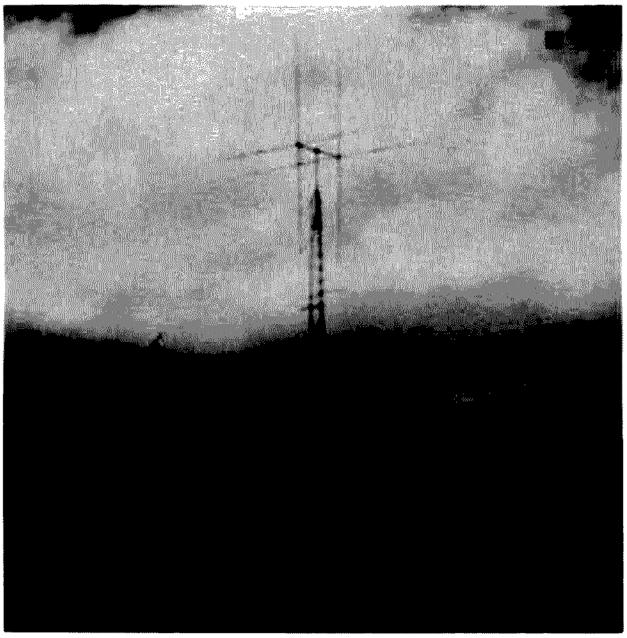

View of 70-foot tower and Hy-Gain quad. This was shot on the approach to the house.

Our 80 meter nighttime operation proved much more successful and we were able to work several of the European countries. We were also able to spend some time in the Russian portion of the 80 meter band, working many of the Russian stations which could not come up to the regular DX area of the band. During the daytime we concentrated primarily on 15 and 10 meters, getting excellent propagation into the Mideast, Asia, and Oceania. Longpath to these areas was also quite effective and was the only way we were able to contact stations in the Asian zones.

Being able to operate in the foreign band, a privilege denied to us in the United States, helped immensely in contacting new countries. We were able to avoid much of the QRM and congestion of the American band and were also able to contact stations which operate primarily in the foreign band. Split operation also was made more efficient by our ability to listen in the DX portion of the American band but transmit below the band edge. Operating in this portion of the band was an experience we really miss, now that we are back in the United States.

We were surprised to find that, at the end, when all was totalled, we had not only met our goal of 100 countries, but had exceeded it by a large margin. The total country count finished at 143 worked, including all continents. We had also obtained contacts with all 50 states, the most difficult being Alaska and the last being South Dakota. Lest anyone think that all we did was hunt for specific states and countries, let me add that in our eight days of operation, we contacted more than 3,300 stations.

After eight days of operation, we reluctantly packed for our trip back to California. We were sad to leave the island. Though we would not miss the giant bugs that attacked us every night, nor the sugar ants that competed with us for food, we would miss the beautiful weather, the friendly people, the help and support of local hams, and, most of all, the notoriety of being a sought-after DX station. We were about to be transformed back from pileup-makers into pileup-seekers. Stu and I were ready to stay indefinitely, but we had no choice because the house no longer belonged to us. A new occupant was eagerly waiting for us to leave so that he could taste the action that we had enjoyed. The weather was perfect as we left for Antigua to meet our connecting flight back to New York.

As luck would have it, we arrived in Antigua just in time to watch our connecting flight take off for New York, which started off a whole chain of missed flights, so we had plenty of time to sit around airports and reflect on the experiences of our first expedition. We listened quite a bit to cassette tapes that we made of our operation and enjoyed reliving the pileups. Both of us agreed that it was well worth the trip to Montserrat to understand first-hand the workings of a DXpedition. The experience gained on the receiving end of a big pileup is invaluable. It helps one's discipline in operating procedures, and it makes one appreciate the difficult time that DX stations have in sorting out the numerous calls which seem to blend into one continuous buzz.

When we arrived back in Los Angeles, our QSL manager, Sheldon Shallon W6EL, presented us with the first of a number of large shopping bags full of QSL cards. After looking through hundreds of cards sent for our VP2MJE operation, we have learned what will expedite a return card and what will slow a card down. For example, it is surprising the number of people who send cards with local time indicated, instead of the univerally accepted GMT. A DX station, which has no idea of what CDST or MDST means, will simply throw away a card not in GMT, and the poor ham who worked so hard in that pileup will never get his card. We've received cards which have been an hour or more off of the correct time, and some have come through with no time indicated at all. Also, people who send cards to a QSL manager with no SASE, expecting to get a card back immediately, will be lucky to get a card back through the bureau in a year, if at all. Some cards came with the wrong date, and with a log containing 3,300 contacts, it is impossible to spend time looking for that contact. Above all, make sure that every DX card you send is in GMT with the correct date and time, and is legibly written. Luckily, however, most of the cards sent to us were done properly, so we were able to locate them quickly in the log and send them out in a reasonable period of time.

Both Stu and I have agreed that the expense and time involved in an expedition such as ours is well worth it, and we feel that any ham who has the opportunity to go on an expedition should not hesitate. One need not go to the rarest spots of the world to enjoy the excitement of being a DX station. We were neither the first nor the last of the stations visiting Montserrat, but every ham who has been there has enjoyed the excitement of being on the other end of the pileups and there is plenty of action on all bands. Other islands could offer the same opportunities. DXpeditioning is a unique experience which can be appreciated only by those who have tried it. ■

D.L. Dobbs K8NQN
6612 Pleasant Street
Cincinnati OH 45227

Close Encounters

—the eyes of Texans are upon them

Something strange was moving up there! Across the glittering star fields of a moonless Texas night it crept, a small orange light, pulsating slightly and growing brighter. Abruptly, it changed direction. Reddish now, it proceeded at right angles to its former course, away from the smudge of light on the horizon that marked a distant city.

A flight controller hunched intently over his radarscope. Its eerie glow illuminated an expression of amazed disbelief. A silent whistle escaped from his pursed lips. An 80° turn at 16,000 mph and out of range already? Involuntarily, his throat muscles tensed to speak to the pilot of the only plane on the scope, then relaxed. Who would believe him? Probably an equipment malfunction, he thought. Yet stories told by old-timers, stories at which he had scoffed, began to filter into his mind.

Much lower now, the object skimmed slowly over an area of rough terrain. A lone car probed the dark county road with high beams. Nearing the crest of a hill, it switched to low as a glare showed someone was coming. The beer net on 34/94 was pleasant company. Suddenly there was only dead silence. Worse yet, the engine and headlights had quit at the same moment!

Too busy braking to question the source, the driver was thankful for the light as he brought the car to a stop on the berm. But now the approaching blaze looked like a jet-propelled magnesium flare. Just as it seemed that it must smash right into the car, it was up and over and off into the sky behind. And a ham sat quietly, shaking for five minutes before realizing that the engine was running, the headlights were on, and the repeater was chattering away as though nothing had happened. "What was *that?*" was still his only thought.

At that moment, not far away, as it had all day, every day for months, a unique laboratory waited to answer that question. Near the very limit of their sensitivity, recording instruments deviated slightly from the norms of their tireless monitoring. Inside a low building, pale by starlight against the dark hillside, electrons surged through microcircuitry. A minicomputer swiftly executed its intricate series of commands. An alarm shrilled, alerting duty personnel. Quickly all posts were manned, and the sophisticated technology of the only known scientific facility in the world dedicated solely to UFO research was ready for what might come.

Still adjusting headsets, observers manning three phototheodolites at widely separated locations on the 400-acre site scanned the stars for one that moved, waiting for instructions. They were not long in coming. "Magnetic anomaly, 270 degrees, increasing in intensity. Stand by." Inside the laboratory, the director studied the endless white tongue of paper extruding slowly from the chart recorder. Eight fine lines were being penned on it, measuring the output of various sensors. Periodic blips indicated time signals being received on 60 kHz from WWVB. Two of the channels were now showing deviation well above their baselines. Attention shifted expectantly to the color video terminal.

From high atop a tower rising into the darkness above a nearby building, powerful radar pulses were sweeping a 12-mile radius. For several rotations there was no unusual return. Then, "Radar lock-on!" As coordinates of the UFO were relayed to the field observers, excited cries doubled in the headsets. "Got it! Orange lenticular object, moving in fast."

All three phototheodolites were now tracking the object. Each operator concentrated on keeping the image of the UFO centered on an illuminated spot in his aiming scope, while shaft encoders on the pan-and-tilt heads of the telescopic cameras were feeding coordinates into the computer. At the same time photographic evidence was being collected, data sampled from each of the three locations every few seconds was being processed into a video display. The UFO's path was seen superimposed over an im-

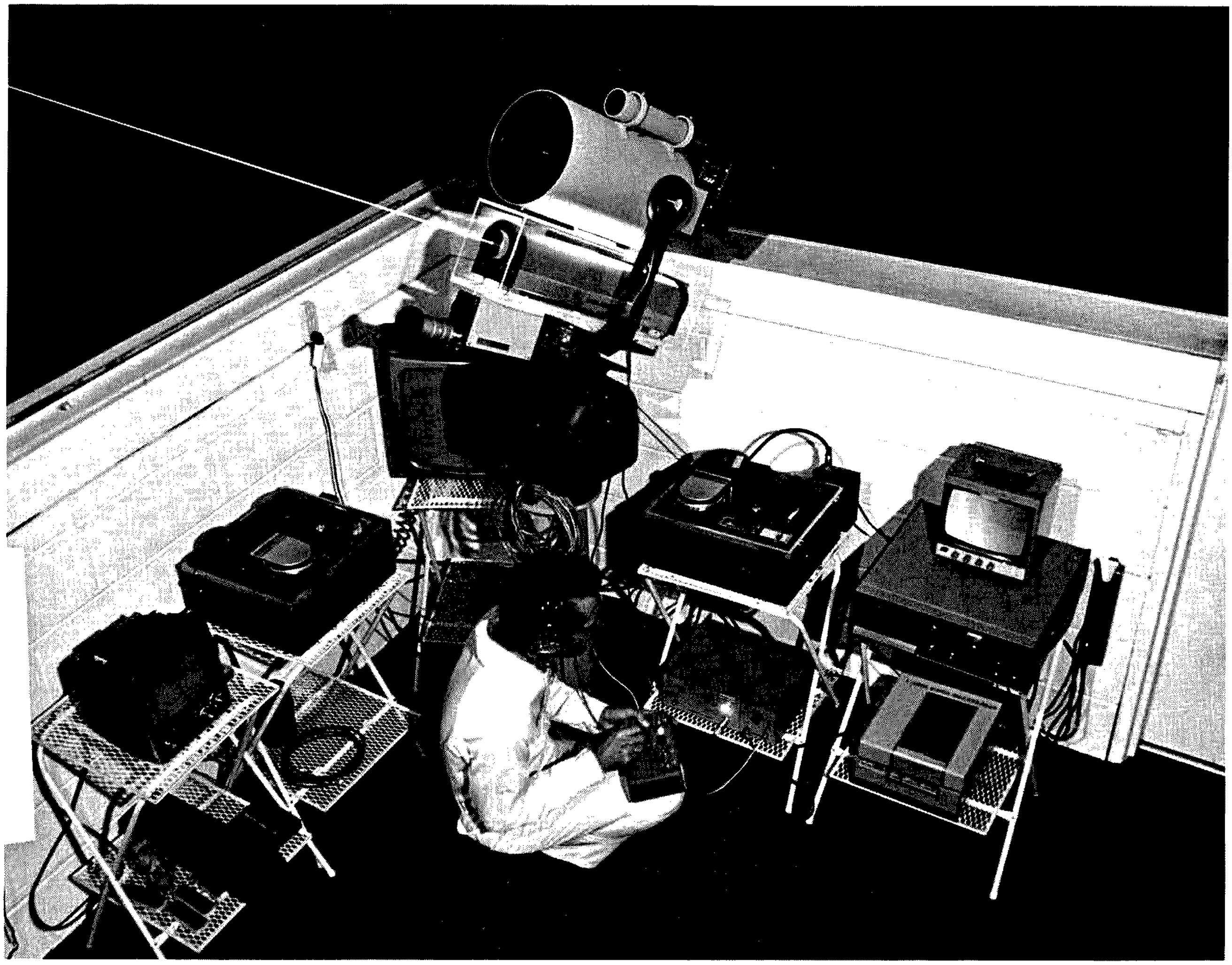

Photo A. Laser beam made visible by water vapor refraction pierces the night from the UFO light-pulse experiment apparatus at the Laboratory for Instrumented UFO Research near Austin, Texas. Capable of transmitting up to 2.5 million bits of response-test data per second, this red-light laser device can also be used to measure UFO distance and test the hypothesis that light beams may be bent in the vicinity of some UFOs.

age of the area beneath it. Actual distance readings were being printed out for permanent record.

Busy as it was, though, the computer was also performing a number of other vital functions. As the vidicon operator focused on the approaching UFO, it measured the arc subtended by the image and computed the size of the object. It also computed the visibility radius of the object, and retrieved the names and phone numbers of ARGUS volunteers who should be able to see it. Several telephone lines were being pulsed with the dual tones so familiar to autopatch users, and sleepy voices began answering phones shrilling on bedside stands miles away. As each answered, the name and phone number was printed out and the volunteer heard, "This is an Operation ARGUS alert! Please do as you were instructed."

Suddenly wide awake, the observers hastily pulled on clothes, jammed feet into shoes, and grabbed binoculars and cameras on the run. This night they were not to be disappointed. Here was UFO event-sharing on a silver platter, in contrast to the ordeals suffered by our friends in "Close Encounters" on the silver screen.

Unlike the movie, the scenario we have imagined is hardly fantasy. This laboratory actually exists. At this very moment, whatever the time, its equipment is scanning the sky, waiting for the real thing to happen. This is where history may be made—Project Starlight International, or PSI.

In the rattlesnake-infested hill country northwest of Austin, Texas, accessible only by four-wheel drive, lies the 400-acre site of the Laboratory for Instrumented UFO Research, a facility unique in the world. At this remote location, field research is conducted for Project Starlight International, a research division of the Association for the Understanding of Man, which is a nonprofit educational organization based in Austin. PSI's purpose? To document scientifically and irrefutably the existence of UFOs. Ray Stanford, founder and managing director, is an acknowledged expert in the field of UFO research. Author of *Socorro "Saucer" in a Pentagon Pantry,* he conducted a fascinating and well-documented investigation of the Socorro,

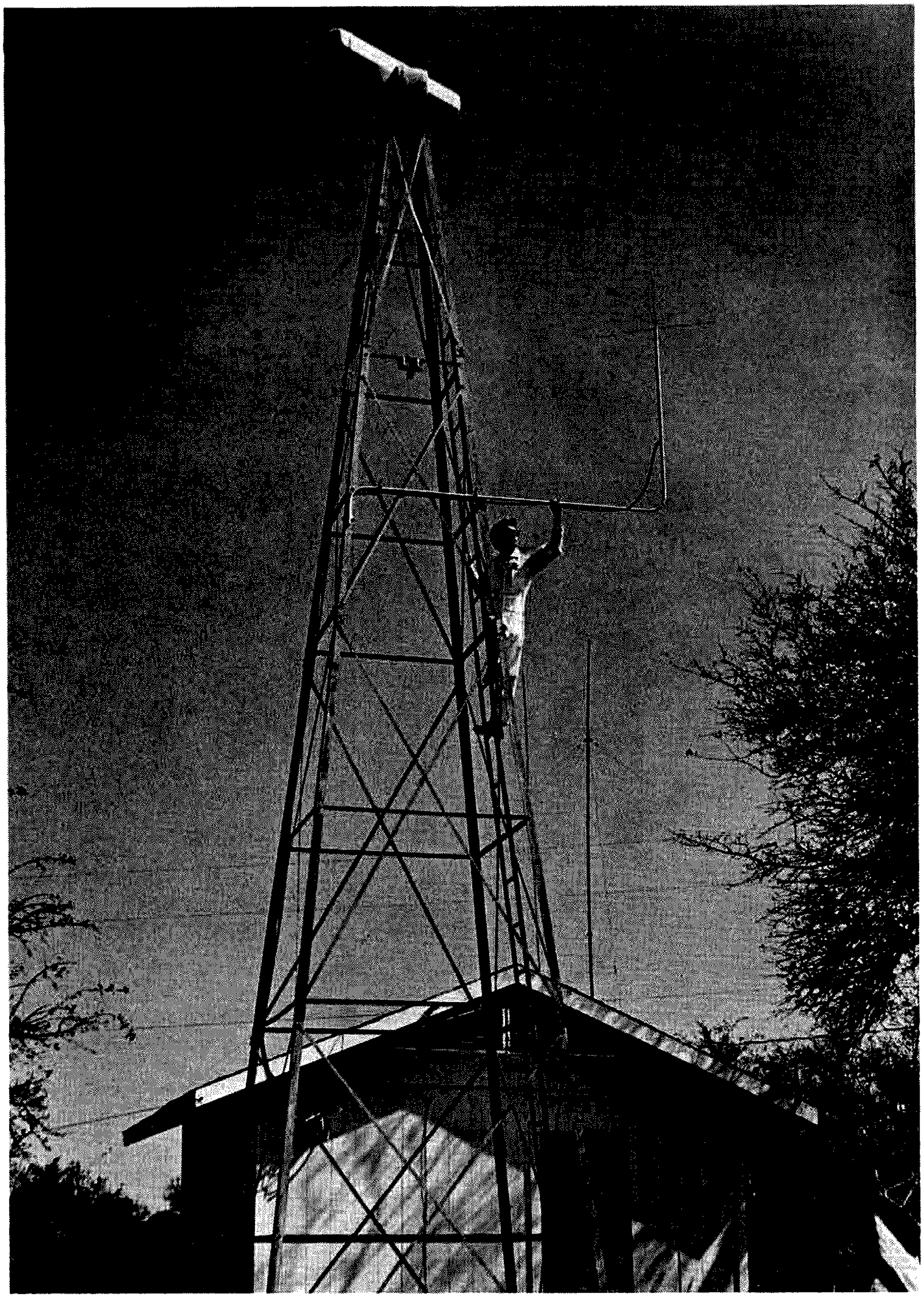

Photo B. PSI's Operation ARGUS radar and radio-frequency monitoring laboratory. With a radius of 12 miles, this radar unit will provide UFO distance data for Operation ARGUS, a computer-centered tracking system of highly sophisticated design covering a range of 472 square miles.

New Mexico, landing of April 24, 1964. According to Stanford, there is no known research facility in the world dedicated to UFO investigation which even approaches the sophistication and capability of PSI.

This high-powered research effort is directed by a professional astronomer, Dr. Daniel H. Harris, Ph.D., from the University of Arizona. Dr. Harris, something of a modern pioneer, is the first scientist to accept a full-time paid position in UFO research. Right now, final touches are being completed on the most sophisticated of the equipment, and the laboratory will be fully operational. Much of the equipment is already scanning Texas skies twenty-four hours a day. And a most impressive array of scientific goodies it is indeed.

What are the prospects for irrefutably documenting a close encounter? Much better than you might think, as witness the photographs showing only one of several UFOs observed at the site. But wouldn't it be better to go to the UFOs rather than hope they appear at one location? Actually, that was the historical approach. During the green fireball episode in the late '40s and early '50s, teams of investigators for Project Twinkle rushed from one area to another where sightings were being reported. Invariably, they arrived too late to see anything. The UFOs, it seems, didn't wait around for them. PSI decided that it would be more productive to establish a permanent laboratory with sophisticated equipment and man it around the clock, seven days a week. The other option is still open, however. A vital core of instruments can be transported on short notice by four-wheel-drive van to any location where it might be needed.

Until now, most UFO research has been anecdotal. Witnesses of past events could be interviewed and second- or third-hand information could be correlated. Infrequently, a fortuitous amateur photograph, usually of very poor quality, might turn up. Or perhaps a bit of soil from a purported landing site could be secured for analysis. Immense effort went into analyzing and rehashing data of this kind, and there is a lot of it. UFOCAT, the computerized files associated with the Center for UFO Studies, now contains over 60,000 close encounters. And Ted Bloecher has indexed over 1500 close encounters of the third kind, in which contact with entities was reported.

However, there was no way to study UFOs directly and scientifically. Like the weather, lots of people talked about UFOs, but nobody did anything about them—except for the military, which was busy trying to shoot them down.

Scientific voices have cried in the wilderness almost from the beginning of the modern UFO era in World War II, urging serious investigation. Back in 1968, the House Committee on Science and Astronautics held a hearing on UFOs. Dr. Garry C. Henderson, then project leader on the lunar surface gravimeter/surveying system, proposed an implemented plan to acquire hard facts about the existence and nature of UFOs. He even detailed the instruments which should be used. And Carl Sagan, an astronomer who is as outspoken an advocate of the well-inhabited universe theory as he is a skeptic about UFOs, has said that anyone really interested in the supposed phenomenon should use high-quality instrumentation to probe its nature. Finally, someone is doing just that!

PSI is equipped to study a broad range of physical effects which might be associated with UFOs. Their objective is to gather a maximum range of hard data and to disseminate this information quickly to members of the scientific community. At a local level, larger numbers of people, probably including some hams, will be able to share in UFO events through Operation ARGUS.

The Greeks, as usual, had a word for it. Argus was a character in Greek mythology who had eyes all over his body to make him a good watchman. At the Laboratory for Instrumented UFO Research, ARGUS stands for *A*utomated *R*ingup on *G*eo-located *U*FO *S*ightings, and we have illustrated how it might work in practice. But there is a lot more to scientific UFOlogy than this.

UFOs have been reported to cause magnetic, radio-frequency, electrostatic, and gravitational effects, as well as temperature changes, barometric disturbances, and sounds. PSI's automatic recording equipment therefore includes three magnetometers and a gravimeter, as well as a microbarometer, an electrometer, and a sky camera activated by magnetometer deviations. An ambient microphone records voice input and audio effects, while a highly-directional microphone can handle distant sounds. The eight-channel, sensor-activated chart recorder displays low-frequency data up to 150 Hz correlated with universal time from WWVB. Radio-frequency scanners and recorders also incorporating UTC input cover the rest of the spectrum.

A computer-interfaced magnetometer system has been completed which will process field-effect data. Newly-designed sensors with 60-Hz filters respond up to 700 Hz and are oriented in three dimensions. Thus a three-dimensional video model of the magnetic field around a UFO can be displayed, showing each component in a different color. Pulsations or changes in light emitted by a UFO can be monitored by an electronic system utilizing solid-state sensors having a bandwidth of 10 MHz.

OZMA and CYCLOPS are strange-sounding names for serious projects funded by the U.S. government to search for intelligent life in space. Possible communications from selected stars have been monitored. SETI, Search for Intelligent Life, is an ongoing NASA project which is developing designs for a very large system of antennas and computers for the purpose of contacting extraterrestrial life. Since NASA scientists are convinced of the importance of such endeavors, PSI has not neglected this aspect of UFO research. Are UFO intelligences, if they exist, capable of or interested in exchanging intelligent communication? To answer this question, a modulatable Liconix 605M helium-neon laser has been installed which can transmit voice, code, or television signals. Any modulated light response which a UFO might make to the laser signals can be detected as sound or as a TV image.

Radio transmissions other than noise have not been reported from UFOs. Disruption of radio transmission and reception, on the other hand, is frequently reported. This is why laser light rather than rf was chosen for a communication experiment. According to many reports, what appear to be coherent light beams of various colors have been projected from UFOs. And searchlight beams directed at UFOs have been seen to bend sharply, due perhaps

Ray Stanford, Managing Director
Project Starlight International (PSI)
PO Box 5310
Austin TX 78763

Walter Andrus, Director
Mutual UFO Network (MUFON)
103 Oldtowne Road
Seguin TX 78155

Dr. J. Allen Hynek, Director
Center for UFO Studies (CUFOS)
924 Chicago Avenue
Evanston IL 60202

William Spaulding, Director
Ground Saucer Watch (GSW)
13238 North 7th Drive
Phoenix AZ 85029

Dr. Dennis W. Hauck, Director
International UFO Registry (IUFOR)
PO Box 1004
Hammond IN 46325

James Lorenzen, Director
Aerial Phenomena Research Organization (APRO)
3910 East Kleindale Road
Tucson AZ 85712

Table 1. Major UFO research organizations.

DAY	BAND	MHz	UTC	EST	NET CONTROL	QTH
Saturday	40	7.237	1200	0800	N1JS	MA
Saturday	75	3.975	1300	0900	WA9ARG	IL

Table 2. MUFON amateur radio SSB nets—weekly.

Photo C. An early prototype program display on Operation ARGUS's color video terminal, showing simulated UFO tracking over a computerized topographic map. Tracking and laboratory instrument data is automatically displayed below the map.

to some field effect or variations in atmospheric density. These are phenomena worthy of investigation for which the laser equipment could be used. In addition, the system can be adapted to determine the distance of an object with extreme accuracy using reflected laser light.

As you might expect, photographic documentation is an important aspect of the laboratory program. UFOs within range will find that they are captured on 35mm moving picture film. A Super-8mm sound movie camera with a 1-to-12 ratio zoom lens is also available. From various stations at the site, three automatically synchronized 35mm cameras, one of which is equipped with a diffraction grating for spectral studies, record any UFO event. High-resolution, close-up images of objects being tracked can be obtained using Schmidt-Cassegrain telescopes of 2,110mm and 1,250mm focal lengths, as well as a 240mm telephoto lens on the 35mm movie camera.

UFOs have often been reported to investigate new or unusual light patterns on the ground. Some have responded to lights flashed or directed at them. For this reason, a light pattern response experiment has been devised, although it is rarely used. A hundred-foot circle consisting of ninety-one 150-Watt spotlights contains a single light in its center. Solid-state circuitry and a microprocessor make it possible to sequence the lights in any desired pattern, or even to mimic the light patterns of a UFO.

KI2XBJ, the only known radar facility in the world dedicated exclusively to UFO research, was licensed by the FCC on June 8,1977. Although it is planned to install a more effective system for broad-range sky coverage when funds permit, the present Raytheon Model 1700 covers a 12-mile radius with 360-degree rotation. Operating on 9375 MHz, its 7.5 kW pulses can detect reflective objects up to 20 degrees above the horizon.

How big was the UFO? This easy-sounding question is one of the most difficult to answer accurately when a sighting has occurred. Was the object very large and far away, or was it small but close to the observer? Few people run around with optical range finders in their pockets, and it is rare that a UFO passes in front of some background object which can provide a distance reference. At PSI, however, Operation ARGUS can determine distance electronically by radar. Not all UFOs reflect radar signals, apparently, but this poses no problem. Accurate horizontal and vertical coordinate data from shaft-encoders on optical tracking equipment can be triangulated by the computer to provide actual distance, horizontal distance, and altitude. If the area of an image can be measured, the size of the object can then be computed from the distance data.

When a UFO is being tracked, the ARGUS computer has been programmed to select from its memory of 472 square miles of terrain that sector of a full-color topographic map over which it determines the object to be passing. The path of the UFO then appears on the video display superimposed over the image of the terrain. Sequentially-tracked positions are indicated by successive letters or numbers. The entire episode, correlated against UTC, can be retrieved from computer memory for later study. Ground objects over which the UFO passed or hovered as well as possible landing sites will thus be a matter of record. They can be examined for evidence later, if the UFO departs before a mobile unit can reach the site.

We've had a look at the GUS of Operation ARGUS, which is primarily technological. The AR, automated ringup, deals with people, for it is in this way that local volunteers can get involved. Ray Stanford terms this aspect of the operation "UFO event-sharing." Here is a concept of great potential to us as amateur radio operators, wherever we may live. As a movie, "Close Encounters" was great entertainment and could even be considered educational in some respects. But, fantasy aside, what is the actual status quo with regard to UFO knowledge at the

present time?

To be honest about it, there is a great diversity of opinion on the subject. UFOlogists, many of whom have been investigating the phenomenon for thirty years, present a spectrum of opinion. Some take the position that little or nothing is known concerning the true nature of the UFO. Official government interest vanished with the dissolution of Project Bluebook and the issue of the infamous "Condon Report," which as much as denied their existence. On the other hand, a number of authorities believe that the reason for governmental disinterest, including the recent refusal of NASA to reopen the field for investigation, is that they already know all about UFOs. In his book, *Situation Red: The UFO Siege,* Leonard Stringfield builds a strong circumstantial case that intact spacecraft have been recovered from crash sites, and that extraterrestrial humanoids have been autopsied. If so, it now appears unlikely that military authorities will voluntarily expose these facts to public view. However, a lawsuit filed by one UFO group against a government agency under the Freedom of Information Act could produce evidence of such concealment.

Between these viewpoints, one finds many theories about the nature of the UFO. Some UFOlogists believe that the phenomena may be psychic in nature. Others think UFOs are a mass neurosis, a psychological projection from the race mind. A few like the idea that they are a control mechanism, designed to influence human evolution in the manner we saw dramatized in the movie "2001." Most, however, believe the evidence points to hardware from outer space, vehicles from some distant star system which operate through space/time in a manner we cannot yet comprehend. It is this hardware aspect of UFOs which renders them susceptible to instrumental investigation. We may be on the way to answering what UFOs are, but the questions of where they are from and why they are here will ultimately have to be answered as well.

Where, then, does all this leave us, as interested citizens who want to know

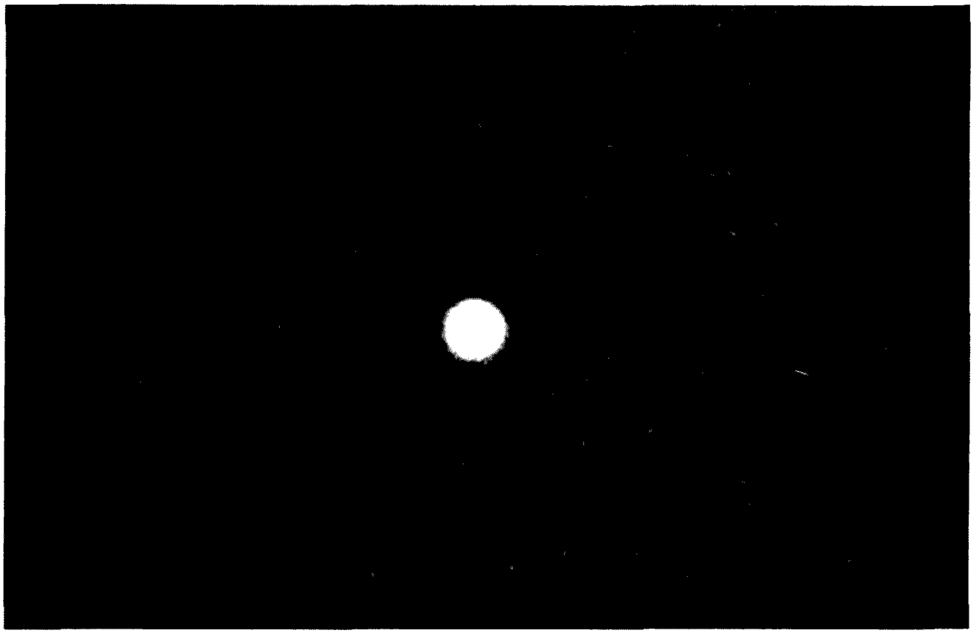

Photo D. Second-generation print of possible UFO which hovered for nearly 10 minutes beginning at 8:58 pm on December 10, 1975. Tri-X film, 5-second exposure with 300mm f/4 lens. Forty-eight photos were obtained during this event, which occurred prior to installation of PSI's more sophisticated equipment.

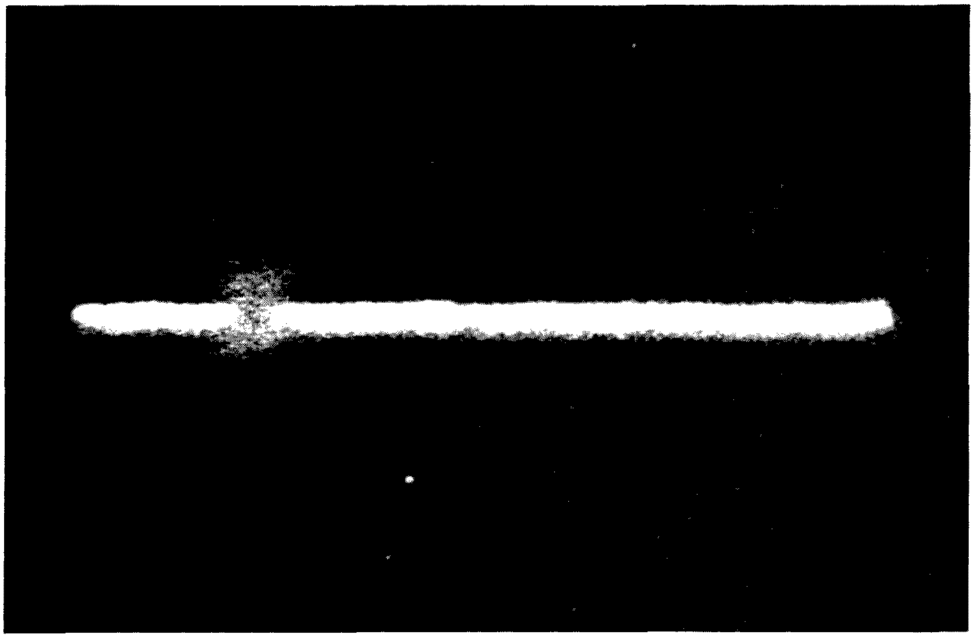

Photo E. Second-generation print of same object as Photo D moving off to left during 8-second exposure. Note strange burst-like effect not apparent to observers. Approximately 9:09 pm, Tri-X film with 300 mm f/4 lens. Typical of those taken by the PSI staff during the December 10, 1975, event, the photos are encouraging but not considered definitive concerning the nature of UFOs.

the truth? And what can we do to help, or to be prepared when the next "flap" or wave of activity once more fills our skies with something strange?

There are things we can all do. For those fortunate enough to live in the vicinity of Austin, training and participation in PSI activities as a volunteer might be possible. The expense of supporting a research effort such as this suggests a way in which we might contribute. As radio amateurs, however, we have unique qualifications for participating in UFO event-sharing on a national as well as a local level.

We can keep informed through groups which correlate and communicate information, such as the Center for UFO Studies. Dr. J. Allen Hynek, Chairman of CUFOS, was technical advisor for the production of "Close Encounters." Much of the realism of this film can be attributed to the case information he was able to provide. We can also join or support investigatory groups such as MUFON or GSW, for example. MUFON amateur radio nets meet weekly. On Saturday mornings at 1200 UTC, the 40 meter section meets on 7237 kHz, and the 75 meter section meets at 1300 on 3975.

Every section of the country has investigators trained by some organization to investigate UFO incidents. They are often interviewed by the media. Most of them would be more than happy to speak at a radio club meeting, or to know that local hams are ready to help during a local UFO flap. Many of them need education in the tremendous capabilities amateur radio has for tracking and reporting sightings and landings. Repeater groups in particular may be interested in learning who to call and what to do if UFOs appear in their area. So the relationship can be one of mutual benefit. Getting qualified investigators to the site of a UFO incident, while it is still in progress if at all possible, is the key to solving the mystery. The government agencies can offer no help, since they have officially declined to investigate UFOs. The police, if they do anything at all, generally report the incident to the Center for UFO Studies via their hotline. Ultimately, news of the incident may filter down from there to the headquarters of one of the investigatory groups such as MUFON. A local investigator is finally informed and hopefully reaches the scene. By then, the UFO and most of the evidence is long gone. Wouldn't it be much more efficient if hams knew who to contact in their own area to report an encounter? And a call on the 2 meter repeaters in any city ought to furnish plenty of tracking observers or witnesses in a hurry. We can't all have a Project Starlight International in our backyard, but we do have an HT, a mobile, or a low-band rig and know how to communicate. We also have some technical training which helps in describing a UFO and its effects. Working together, we can solve the UFO problem.

Current UFO activity has recently shifted from South America to Australia. The lull in sightings in the U.S. may end at any time. UFOs, the eyes of Texas are upon you! And we'll be keeping ours open, too.■

The Schizophrenic Triangle

—a split-personality radiator

Freddy Brown WA4JTJ
RFD 1, Box 267
Scottsville KY 42164

If you're interested in a multiband, inexpensive, easily built wire antenna system with DX capabilities, then here it is. It's inexpensive because it is made of available materials, such as wire and small variable capacitors for the matching section. This also contributes to the ease of construction. Because the antenna has a dual personality, or is bibanded, I call it "schizophrenic."

The triangle antenna is a single loop of wire fed by a gamma match. In fact, the loop has two gamma matches (one for each band of operation). I first built a 40m triangle as described by Byron Self WB6UFW.[1] I operated this antenna for about a year with excellent results. A loop is very wide-banded. In fact, by use of the gamma match, the swr of this antenna never exceeded 1.3:1 at the band edges. The 40 meter loop is 1 wavelength long (140 ft.). After realizing this closed antenna loop would probably resonate with 15

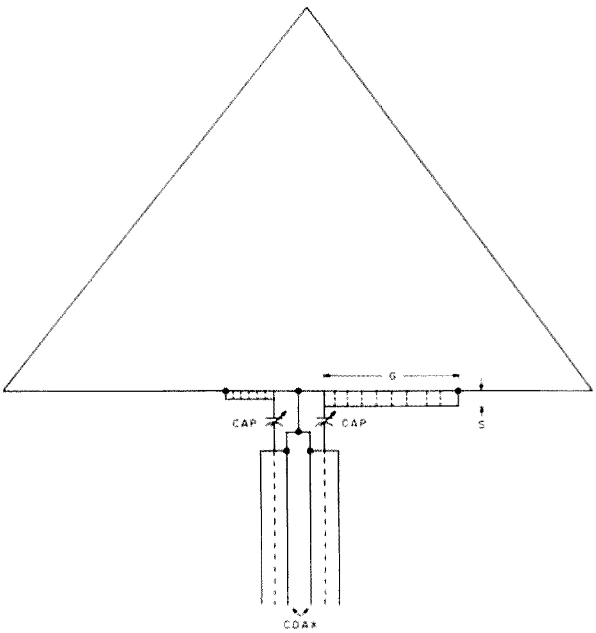

Fig. 1.

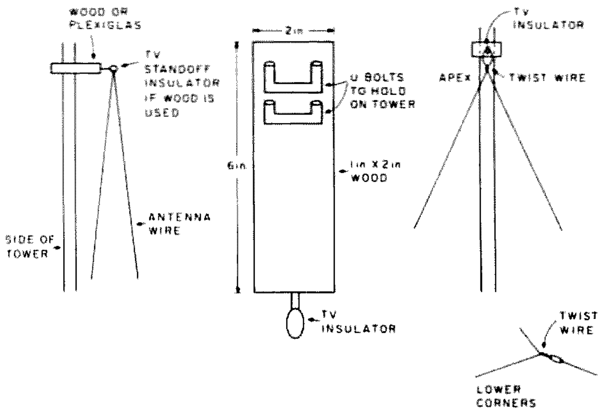

Fig. 2.

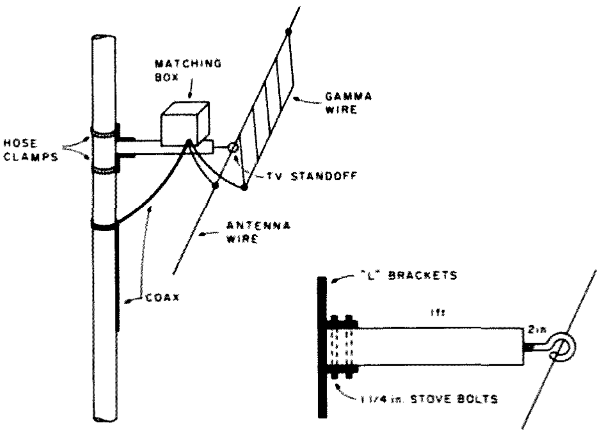

Fig. 3.

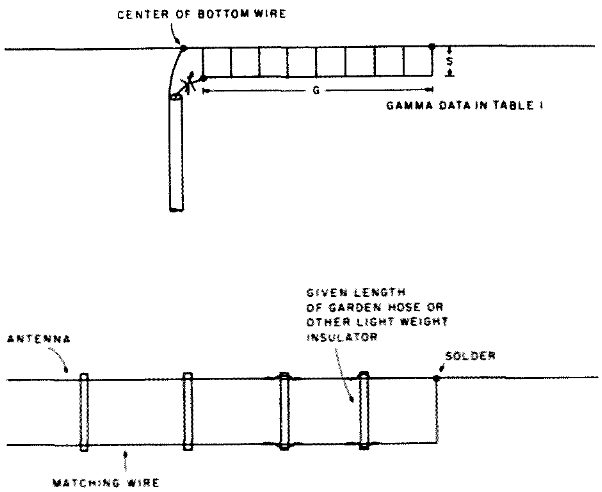

Fig. 4.

meter (21 mHz) excitation, I proceeded to build a 15m gamma match and attach it directly to the antenna. The same results were obtained on 15 meters — low swr and very wide bandwidth. Adding the second gamma match didn't alter the performance of the original antenna.

Shortly afterwards, I constructed a triangle loop for 80 and 10 meter operation. I simply computed the loop length for the middle of the low frequency band by using the formula: 1000/f(MHz). For example, 1000/3.6 = 278 ft. This is 1 wavelength for 80 meters and 8 wavelengths for 10 meters.

Construction Notes

I'm including diagrams from Byron's article to aid in the construction of the wire loop and gamma matches. These are Figs. 2-4. Fig. 1 shows the "schizophrenic" triangle with gamma matches attached. Solder the braid of the two 50- or 75-Ohm coaxial lines to the center of the loop. Solder the center conductor of the coax to one side of the capacitor and the gamma wire to the other side of the capacitor. I used a plastic freezer box to house the capacitor and applied silicone rubber sealant to waterproof the holes made by the exiting wires. I used a standard close-spaced 365 pF broadcast band capacitor, which has not arced yet with my 180 W transmitter.

Final Notes

I installed both loops on my 60-foot tower (Fig. 5), leaving room at the top for TV, 2 meters, and maybe a yagi or two later on. The loops should be kept as close to equilateral triangles as possible. Of course, I couldn't do this with the 80 meter loop on my 60-foot tower. Therefore, I stretched the horizontal side to 122 ft., and each slanting leg was 78 ft. long. This put the horizontal leg about 10 ft. above ground and the apex at the top of my tower. The whole loop is tilted a few degrees off vertical. I would expect that tilting the triangle would result in a lower angle of radiation.

One last point. A good antenna switch in the shack is desirable for quick band changes. ■

Reference

1. Self, "The 40-Meter Triangle," *QST*, Vol. LX, No. 5, May, 1976.

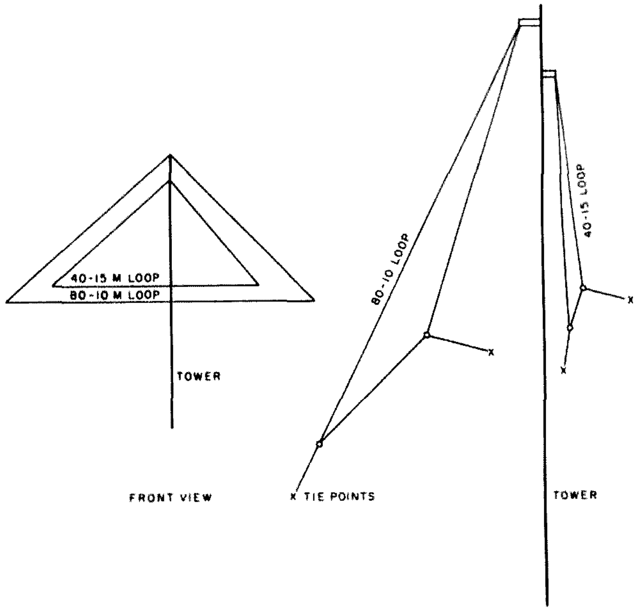

Fig. 5.

Band	Loop information: Loop length for middle of band	Gamma data: G	S	Capacitor (pF)
80	277'9"	96"	6"	300
40	141'	73"	4"	200
20	70'5"	35"	2"	100
15	47'2"	27"	1.5"	75
10	35'8"	18"	1"	50
6	19'11"	10"	1"	30

Combinations	Loop length	Gamma data	Resonant frequencies
40m and 15m	141'	same as above	40m—7.100 MHz 15m—21.277 MHz
80m and 10m	277'9"	same as above	80m—3.6 MHz 10m—28.830 MHz

Table 1.

Terry Conboy N6RY
1231 Crestview Drive
San Carlos CA 94070

From CW to Computers

—a digital modulation primer

You're sitting in your easy chair discussing the fine points of raising begonias with the bunch on 3914 when something sounding a great deal like the soundtrack from the "Texas Chainsaw Massacre" begins to put a decided cramp in your rag chewing style. The group is divided on whether it is SSTV, Teletype™, facsimile, or just the Russians at it again. Whatever it is, you decide, it is at least 50 kHz wide, and bound to be part of the computer conspiracy incited by *73* and its I/O section. Bunch of whippersnappers and their confounded digital modulation!

Digital modulation is nothing new, having been started by Samuel F. B. Morse and others quite some time ago. Lately, however, it has grown into something quite removed from the days of manually sent Morse code and of clanking, noisy, mechanical teleprinters. Integrated circuits have made complicated signal processing simple, or at least small, and computers are now available at a price within reasonable reach. Lots of hams like you have found that there is a great amount of fun in programming and playing with microcomputers. After the initial hardware debugging and the game playing which follows, you remember your temporarily-forgotten transceiver and begin to wonder how you can hook your new toy to your old one. And while you're wondering that, you also wonder what the output of your transmitter will be and how many "Sunday Afternoon Begonia Appreciation Nets" will be doomed by your next computer-driven transmission.

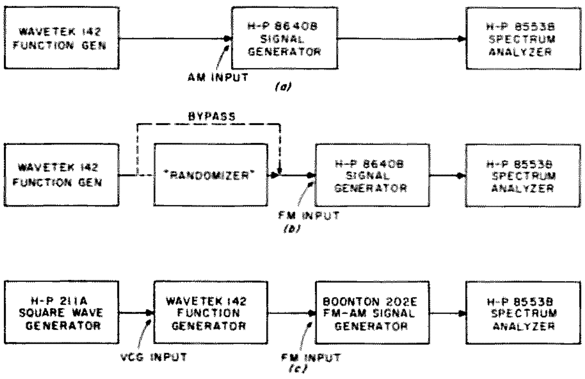

Fig. 1(a). A1 measurement setup. Carrier set to 7 MHz. (b). F1 measurement setup. Carrier set to 20 MHz. (c). F2 measurement setup. Carrier set to 55 MHz.

The FCC stands in the way of complete havoc, leaving you only a few loopholes. Presently, they only allow two types of digital modulation for general use. One is good old Morse code, and the other is the Baudot teleprinter code. The Baudot code is a five-bit code with definite legal speed restrictions; International Morse is not limited in speed at all. Receipt of Morse by ear is limited to perhaps 100 or so, and there is a group of operators who specialize in running speeds like that for their own fun and amusement. But your computer is much better equipped to send and receive Morse than the human brain, and with a small amount of restraint on your part, you should be able to run Morse much faster than 100 wpm and still not convince the FCC that it should pass new, even more restrictive laws to slow you down once again. To help you gain an appreciation for the bandwidths of the signal you may create when you digitally modulate your transmitter, I have made a few measurements to indicate what you might expect, both for speeds and codes now permitted, and some that might be allowed on the air.

Types of Digital Modulation

The most familiar type of digital modulation is probably CW. This is called continuous wave, because it normally isn't, to help the confusion. It is better to call it A1, which means on-off amplitude keying. In case you haven't checked lately, it is still being used in the amateur bands.

A modification of CW is A2. This is tone-modulated AM. Usually this is used for code practice to allow the use of simple receivers. Its chief identifying characteristic is its inefficiency. It uses lots of transmitter power without paying you back in signal-to-noise

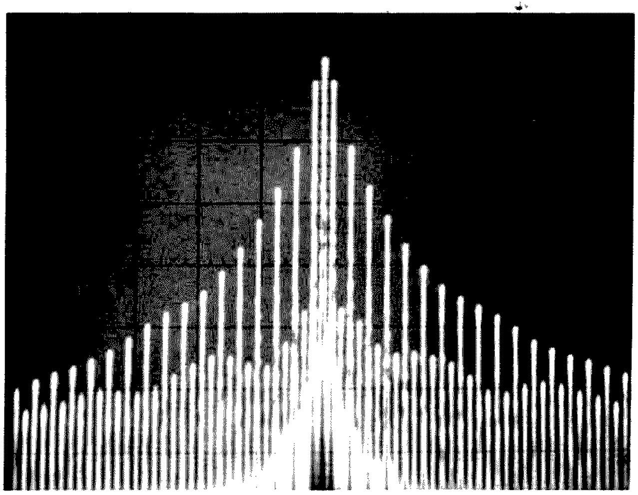

Fig. 2. CW signal at 300 bps with steady dots. Scale: 1 kHz per divison.

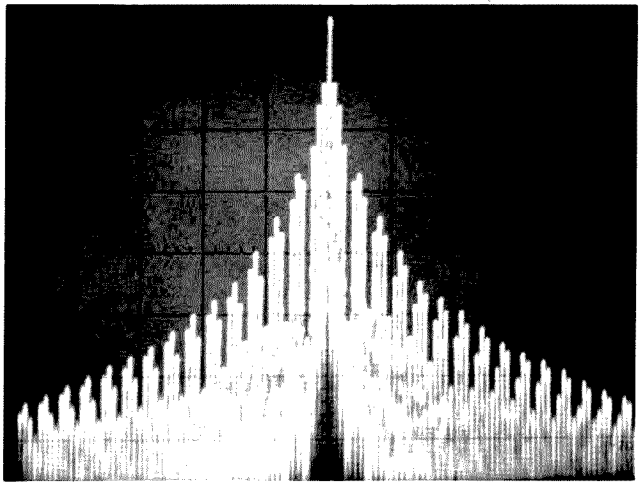

Fig. 3. CW signal at 300 bps with steady dashes. Scale: 1 kHz per division.

ratio. Let's let this one die a natural death.

Lots of hams are now active on Teletype™, using FSK. This is designated F1, which stands for telegraphy by frequency shift keying. The key-down or marking condition is noted by one frequency, and the key-up or spacing condition is noted by another. Normal practice on the HF bands is to use a shift, or frequency difference, of 170 Hz. This has largely replaced the use of 850-Hz shift by hams.

As in the case of CW, FSK has a counterpart called AFSK-FM, which is tone-modulated FM, designated F2. Audio tones are shifted by the teleprinter keyboard (or computer) output, and these tones then are used to modulate a standard FM transmitter. This is in widespread use on many FM repeaters designed specifically for the enjoyment of RTTY enthusiasts.

Since the FCC groups phase modulation with frequency modulation, you would probably not be stretching things too much to suppose that you could use PSK, or phase-shift keying, and call it F1. I have never seen any amateur use of PSK, probably because of the difficulties in demodulating it. It may not be totally suitable for use where the propagation medium is unstable, causing multiple paths between two locations and the accompanying fading and rapid phase rotation.

For these reasons, I will limit myself to looking at only three types of signals: CW, FSK, and AFSK-FM. I'll show you what present signals probably look like, and give you a few glimpses into what the future may allow on the amateur bands to enhance your digital modulation pleasure.

Before we begin, one idea is very important. That is a concept called frequency scaling. What this means is that the spectra of digital signals will be unchanged, except for frequency scale, if you change both the rate of modulation and the frequency shift, if any, in the same porportion. For example, the spectrum of a transmitter with FSK of 170-Hz shift and 45.45 bit per second modulation will look identical to that from a transmitter with 17-kHz shift and 4545 bit per second modulation, except that the spectrum will be blown up in the frequency scale by 100 times. This trick was used in all of the examples that follow, to allow the spectrum analyzer to be swept over wider frequency ranges at higher sweep speeds, using wider detector bandwidths than would have been possible. In other words, I used sleight-of-hand to produce the spectrum photographs. The scaling factor used was 100, except for the F2 spectra (scaled by 10 times).

Morse Code

International Morse consists of dots, dashes, and three different lengths of spaces. Dashes are (supposed to be) exactly three times as long as a dot, as is the space between letters. The space between dots and dashes is the same length as a dot, and space between words is seven times this length. Each dot period represents one binary digit or bit of information.

In order to produce the spectrum for a CW signal, we need to know the relationship between the speed in words per minute and the signaling rate in bits per second (sometimes called a baud). The FCC uses a standard word composed of 50 bits.[1] Therefore, one word per minute corresponds to 50 bits per minute or 0.8333 bps.

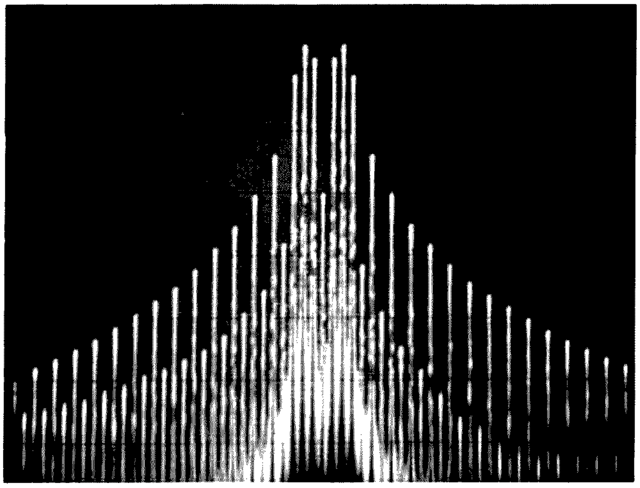

Fig. 4. 600-Hz shift FSK Morse at 300 bps with steady dots. Scale: 1 kHz per division.

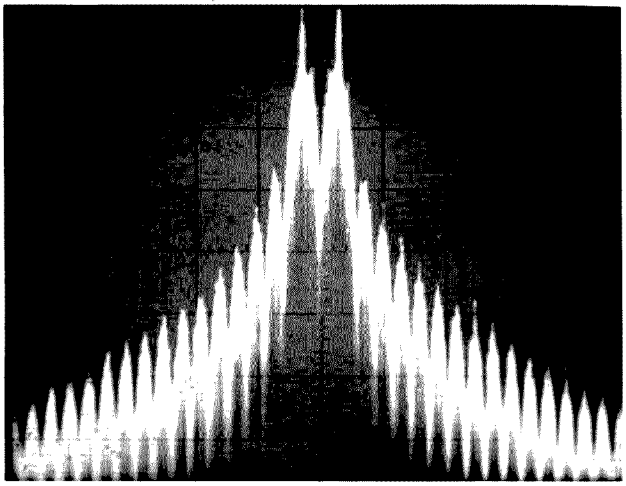

Fig. 5. 600-Hz shift FSK Morse at 300 bps with random keying. Scale: 1 kHz per division.

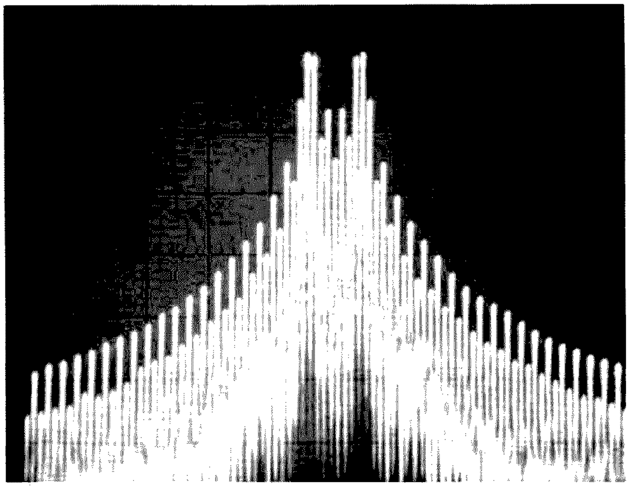

Fig. 6. 170-Hz shift FSK at 45.45 bps with alternating 1s and 0s. Scale: 200 Hz per division.

Somewhat arbitrarily, I have chosen a signaling speed of 300 bps, which translates to 360 wpm. This seems pretty fast, but we'll see that the transmitted bandwidth is within reason. And because of the scaling property, you can get a good idea what bandwidth will be produced by slower speeds.

The FCC rules contain an assortment of formulas for calculating *necessary bandwidths.*[2] This is an indication of the width of the signal that must be transmitted and received in order to obtain a reasonable replica of the desired signal. For A1, BW = B x K, where B is the signaling rate in bps and K is an empirical constant set equal to 5 for fading circuits (aren't they all?). From this we get a necessary bandwidth of 1500 Hz. This is admittedly an approximation, but at least it gives us an indication that we won't need to cover up more than one "Begonia Net" if we inadvertently fire up our rig on the wrong frequency.

Fig. 1(a) shows the measurement setup used to generate the A1 spectra. The function generator produces square waves which are used to AM the high frequency signal

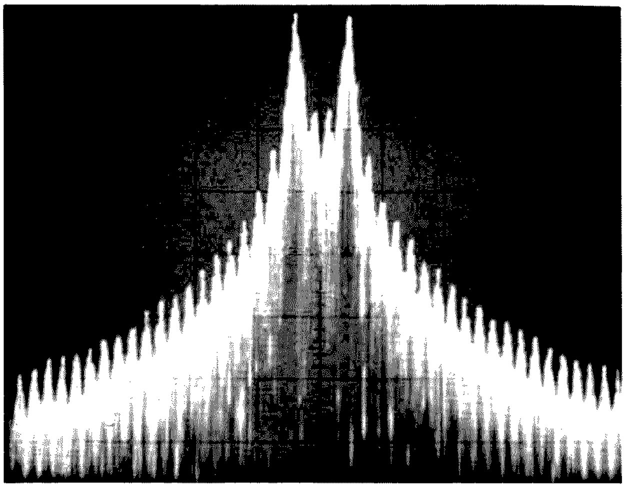

Fig. 7. 170-Hz shift FSK at 45.45 bps with random bits. Scale: 200 Hz per division.

generator. The spectrum analyzer looks directly at the output of the signal generator at around 7MHz. For dashes, the function generator is set to produce rectangular waves with a 3:1 duty cycle at half the frequency used for dots.

Fig. 2 shows the resulting spectrum for steady dots and Fig. 3, for steady dashes. All the spectrum photographs are taken with the top line of the graticule indicating the level of the unmodulated carrier. Vertical calibration is 10 dB per division for all of the spectra. These two pictures have a frequency scale of 1 kHz per divison.

Fig. 2 has a series of fine lines at multiples of the keying rate (150 Hz = 300 bps for dots). Note that every other line is at a much lower level than the preceding line. This is a characteristic of the spectrum of square waves. All of the even-order harmonics of a square wave are theoretically zero. Because of slight imperfections in the symmetry of modulation, the even-order harmonics do appear, but still at a reduced level. It is worth noting that the shape of both sidebands is nearly identical, and is in fact the same shape as the spectrum of the modulating waveform. This is true only for amplitude-modulated signals, and definitely not for frequency-modulated ones.

In order to make a comparison of bandwidths, we have to choose some definition of bandwidth. The FCC specifies allowed *occupied bandwidths* for all commercial services. This is defined as the frequency bandwidth which leaves only 0.5% of the average power above and 0.5% below its frequency limits. This is easy to calculate by adding up the power in the carrier and each sideband, until 99% of the total power is exceeded.[3] For signals that do not have identifiable discrete sidebands, a good approximation of the occupied bandwidth is to take the bandwidth at the −27-dB (0.2% of carrier power) points of the spectrum. This allows a quick estimate of the transmitted signal bandwidth, without the mess of numerically adding up all of the areas under the spectral curve.

For Fig. 2, the occupied bandwidth is 1500 Hz, which is the same number calculated for the necessary bandwidth. To simplify comparison of the bandwidths of the dif-

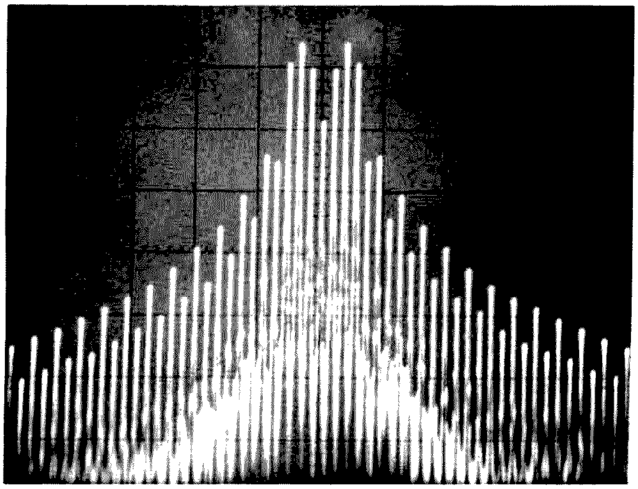

Fig. 8. 170-Hz shift FSK at 74.2 bps with alternating 1s and 0s. Scale: 200 Hz per division.

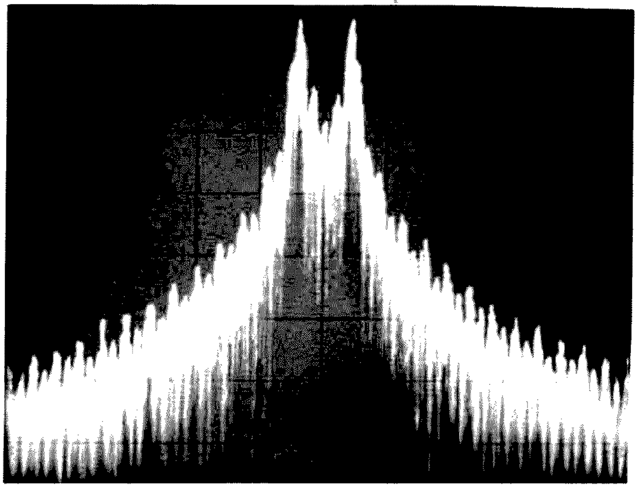

Fig. 9. 170-Hz shift FSK at 74.2 bps with random bits. Scale: 200 Hz per division.

ferent spectra, Table 1 shows the calculated and measured bandwidths for all of the measured emissions.

Fig. 3 has twice as many lines as Fig. 2 since the sending rate for dashes is exactly half that for dots. Every fourth line of dash spectrum is attenuated sharply. This is due to the 3:1 duty cycle, and can be proved mathematically if desired. (As they say in the textbooks, "It can be easily shown that. . .")

Frequency Shift Morse

To some, the thought of Morse code sent by other than on-off keying is a bit strange. If you have ever listened to the Morse identifications required by the FCC for RTTY stations, you can see that it is sometimes difficult to copy code when sent with FSK. The human ear is well equipped to take care of the problems inherent in receiving A1, but a machine is not. The biggest problem for the machine is what to do while the key is up. The noise present during this period is a source of confusion to most demodulators. Many detectors use a phase-locked receiving technique, so the momentary absence of signal means a loss of lock and the need to reacquire lock at the beginning of the next dot or dash.

FSK has a signal present at all times during the transmission. This allows the demodulator to operate without interruption. The problem is now shifted to the transmitter, which has to produce output on a 100% duty cycle. However, for a given key-down transmitter power, an FSK system with proper shift will provide a 3-dB advantage over the on-off keyed system. If you are really worried about the power, you can drop the output of the transmitter to one-half of what you were running on CW and still be in good shape for transmission errors.

Since we're setting up things from scratch, we are free to pick the shift at random, with the only requirement being that we stay within the 900 Hz maximum specified by the FCC. Since the data rate is 300 bps, let's pick 600 Hz for the shift. This would allow us to use audio tones of 1200 Hz and 1800 Hz. These tones are centered nicely in the audio passband of a normal SSB transmitter and have the added advantage that they are all multiples of 300 Hz, which would make it easy to generate the tones with a digital frequency divider synchronized with the oscillator used to make the code.

The formula for the necessary bandwidth for F1 is given by the FCC as: BW = 2.6D + 0.55B, where D is the peak deviation (one-half the shift) and B is the signaling rate in bps. For the case at hand, BW = 945 Hz.

The measurement setup for FSK signals is shown in Fig. 1(b). The function generator output is connected to the FM input of the signal generator, either directly or via the *randomizer*. The randomizer is a 25-stage shift register with feedback taps arranged in such a way as to generate a *pseudo-random sequence* that is $2^{25}-1$ long (33,554,431 bits) before the pattern repeats. The randomizer makes the modulation more realistic, since sending continuous dots doesn't convey much information. Steady dots tend to create the worst case for transmitted bandwidth, too.

Fig. 4 shows the spectrum with Morse dots at 300 bps with 600-Hz shift. The frequency scale is the same as in the previous photos. Except for the

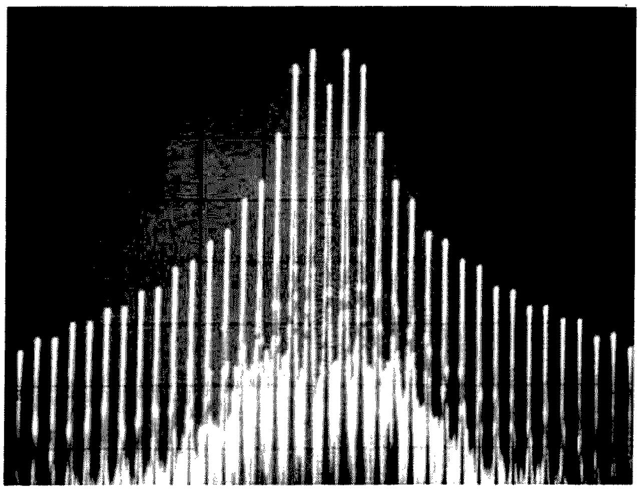

Fig. 10. 170-Hz shift FSK at 110 bps with alternating 1s and 0s. Scale: 200 Hz per division.

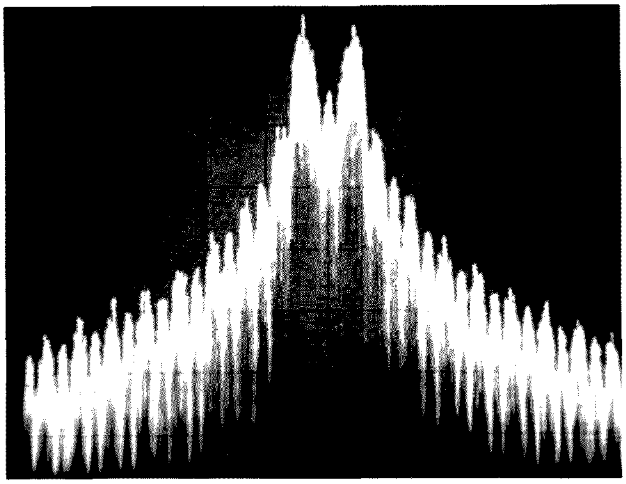

Fig. 11. 170-Hz shift FSK at 110 bps with random bits. Scale: 200 Hz per division.

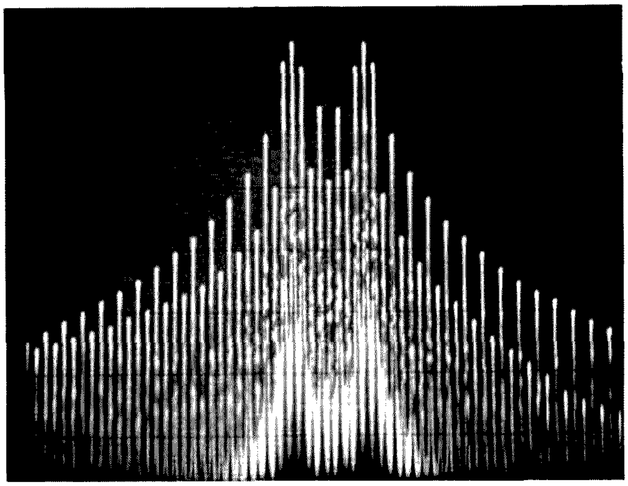

Fig. 12. 1200-Hz shift FSK at 300 bps with alternating 1s and 0s. Scale: 1 kHz per division.

tendency of the spectral lines to bunch up in the region of the resting mark and space frequencies, there are many similarities between the A1 and F1 spectra. The occupied bandwidth is again 1500 Hz, which is almost 60% larger than the necessary bandwidth for F1. At frequencies well away from the carrier, the sideband levels of the two spectra are nearly identical.

Fig. 5 shows the effect of the randomizer. The discrete spectral lines are gone, and are replaced with noise-like spectral lobes. It is interesting that the spacing of the lobes is the same as the major lines in the spectrum of dot modulation. The bandwidth is nearly the same as with dots, but the level of the sidebands several kilohertz away is somewhat lower, due to the increase in low-frequency components in the bit stream at the expense of the high-frequency components, which is caused by the randomizing process.

FSK and Teleprinter Codes

The most common use of F1 is in sending text messages between mechanical teleprinters. The FCC has specified that the code to be in general use by amateurs is the 5-bit Baudot code, named after Emile Baudot, the man who pioneered the concept of printing telegraphy. As used by amateurs, it is a *start-stop* or *asynchronous* code, since it does not require an external synchronizing clock. The equipment is synchronized on a character-by-character basis by using a start bit, which is always a space, and a stop pulse, which is always a mark, to frame the character. The start bit is the same length as each of the five information bits. The stop pulse in Baudot is normally a minimum of 1.42 times as long as the other bits. It can be as long as desired, since the resting condition between characters is the marking state. For computer use, the stop pulse is often made two times as long as the others, for convenience in timing.

A second code authorized by the FCC for limited use (presently on OSCAR) is called ASCII. That stands for the *American Standard Code for Information Interchange*. It is similar in concept to the Baudot code, but consists of a start bit, seven information bits, a parity bit (for error checking), and one or two stop bits. Normally, two stop bits are used when the signaling rate is less than 300 bps, and one is used when the rate is greater than 300 bps. Because it has seven information bits instead of five as in Baudot, ASCII has a greater number of possible code combinations. Many of these are used in making upper and lower case alphabetic characters, but there are also a number of control codes not found in Baudot at all. Because of its greater versatility, ASCII is preferred for communications with computers.

Another possible code that might be used for computer communications is straight binary numbers. Transmitting a start bit, eight information bits, and a stop bit would allow sending binary numbers equivalent to decimal numbers from zero to 255. Although meaningless to (normal) humans, the computer uses these numbers for machine language programs and data. Alas, the FCC does not at present permit the use of this type of data, since it is neither Baudot nor ASCII.

You may be curious about the number of words per minute that are produced by a given bit

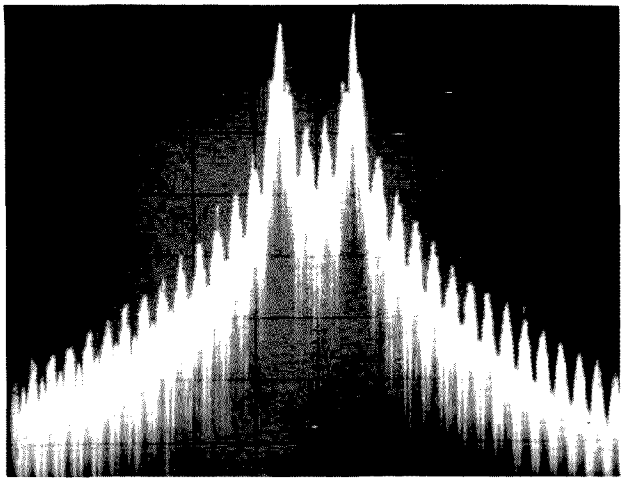

Fig. 13. 1200-Hz shift FSK at 300 bps with random bits. Scale: 1 kHz per division.

rate using Baudot and ASCII. If we assume that a word consists of five characters and a space between words, the speed in wpm for Baudot is 1.35 times the signaling rate. For ASCII with two stop bits, it is 0.91 times the bit rate, and for ASCII with one stop bit, it is equal to the bit rate. Compare this to 1.2 times the bit rate for Morse. It's interesting to note that Baudot is the most efficient of the codes mentioned, in terms of words per bit.

Standard amateur practice at present is to use 170-Hz shift on FSK. (The origin of this number is probably as obscure as that for the 1.42-unit stop pulse!) This has almost completely replaced the use of 850-Hz shift because of improved resistance to interference and selective fading when using 170-Hz shift. Another shift which may be of future interest is 1200-Hz shift. This exceeds present FCC limits, but is in wide use for medium speed telephone data sets and for cassette tape storage of computer programs by hobbyists using the "Kansas City standard." The KC standard normally is used at 300 bps and has been successfully used by computer amateurs for program exchange via long distance telephone as well as by magnetic tape. It is quite possible that it might be usable for rf transmission as well.

The speeds used for the measurements were 45.45 bps (60 wpm Baudot), 74.2 bps (100 wpm Baudot), 110 bps (100 wpm ASCII), and 300 bps (KC standard). Calculated and measured bandwidths are given in Table 1. The measured spectra are shown in Figs. 6 through 13. The first of each pair of photos represents steady alternating 1s and 0s, and the second photo shows the effect of a pseudo-random bit pattern. The photos for the narrow shift signals are made with 200 Hz per division on the frequency scale to allow adequate resolution. The 1200-Hz shift spectra are again at 1 kHz per division.

Notice that, generally, the spectra do not have any lines at what would be the resting mark or space frequencies. This will only be the case where the signaling rate and the shift are integer multiples (e.g., 300:1200 or 300:600). The point of this is that you may *not* be justified in saying that an FSK signal looks just like two oscillators that are being alternately switched off and on. That should make the purists scratch their heads a bit.

AFSK On FM

Lastly, we will look at the spectrum that you might see coming forth from the antenna connector on your two meter rig when you are putting FSK tones into the microphone jack. The measurement setup is shown in Fig. 1(c). Only two cases are considered: 170-Hz shift at 45.45 bps using tones of 2125 Hz and 2295 Hz, and 750-Hz shift at 45.45 bps using tones of 2125 Hz and 2975 Hz. Peak deviation of the rf carrier was set to 5 kHz peak in both cases. The use of 850-Hz shift is still common on VHF, probably because of MARS influences. On VHF, there is probably no significant difference between the two shifts in terms of performance, since signal-to-noise ratios are normally very good, and errors in transmission are rare.

There really isn't much difference in the bandwidths, either, as Table 1 shows. The use of 850 shift tones carries with it the disadvantage that the amplitudes of the sidebands at some distance from the carrier do not diminish as quickly as those for the 170 shift tones.

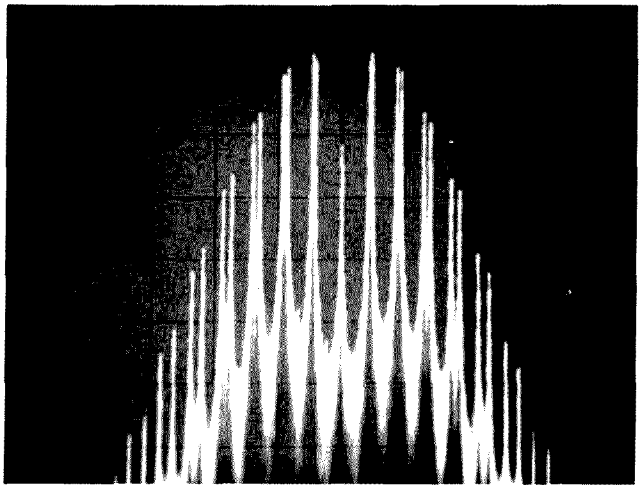

Fig. 14. 170-Hz shift AFSK-FM at 45.45 bps with alternating 1s and 0s. Peak FM deviation is 5 kHz. Scale: 5 kHz per division.

Bandwidth Reduction

The measured spectra are laboratory creations, but they should reflect with some accuracy how actual transmitted signals will appear. It is likely that real signals may be slightly narrower in bandwidth than those shown. Normal CW transmitters employ some filtering in the keying circuits to reduce the tendency to generate "key clicks." These clicks are just the low level sidebands seen in the photos at some distance from the carrier. The filtering in the transmitter makes the spectrum of the keying waveform fall off much more rapidly and reduces interference with nearby stations.

Amateurs who generate FSK signals by putting audio tones into SSB transmitters may restrict the transmitted bandwidth, also. The SSB filter in the i-f circuit will sharply attenuate signals which might otherwise extend beyond the edges of the

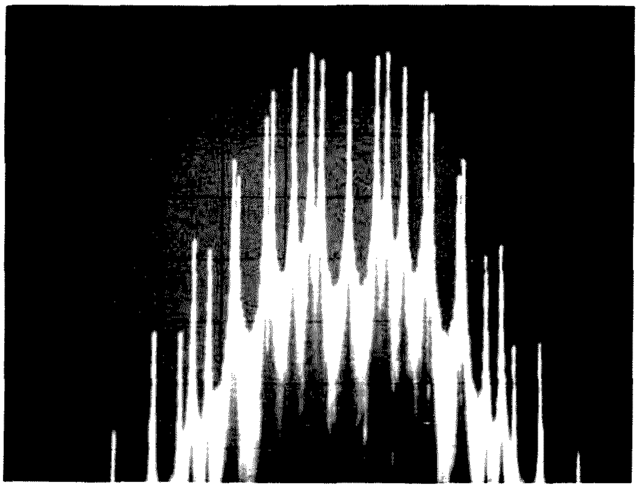

Fig. 15. 850-Hz shift AFSK-FM at 45.45 bps with alternating 1s and 0s. Peak FM deviation is 5 kHz. Scale: 5 kHz per division.

filter. This is especially true in the case of FSK Morse or future use of Kansas City standard signals, since their bandwidths approach that of the SSB filter. Intentional filtering may be added at audio frequencies between the AFSK generator and the transmitter input to accomplish the same result.

Filters which reduce the bandwidth of FSK signals (or any FM signal) tend to introduce an AM component to the signal. If the filtered signal then passes through a transmitter circuit that acts to partially limit the signal, such as an overdriven output stage, the AM component may be removed and the bandwidth widened once again. What this means is that if filters are added to intentionally reduce the transmitted bandwidth, they will not be completely effective unless they follow non-linear circuits.

Someday...

The FCC may give us a chance to use all of these emissions to improve computer communications, and communications in general, as well. Although a phone transmitter may seem simple by comparison, when the signal-to-noise ratio is poor, digital systems give superior performance. Mother Bell has already made the decision to convert the vast majority of her switching systems to *pulse code modulation* to take advantage of the ease of routing long-distance conversations with logic ICs instead of relays. PCM requires a rather large bandwidth, but makes sense in the upper UHF region through the optical wavelengths.

The "Begonia Net" may not soon be running PCM in place of lower sideband, but a "Worked All 8080s Award" for computer-equipped hams running CW at 360 wpm may not be far off.■

Fig.	Bps	Shift, Hz	Nec. BW, Hz	Occ. BW, Hz	−27 dB BW, Hz
2	300	0	1500	1500	900
3	300	0	1500	750	900
4	300	600	945	1500	1500
5	300	600	945	-	1400
6	45.45	170	246	318	318
7	45.45	170	246	-	315
8	74.2	170	262	371	371
9	74.2	170	262	-	380
10	110	170	282	330	440
11	110	170	282	-	360
12	300	1200	1725	2100	2100
13	300	1200	1725	-	2200
14	45.45	170	14590	13770	17000
15	45.45	850	15590	17000	17850

Table 1. Bandwidth summary.

References

1. Lizee, Gaspard, "Speed Standards for International Morse Code," *Ham Radio*, April, 1973, p. 68.
2. FCC Rules and Regulations, Volume 2, Subpart C, Section 2.202.
3. Guentzler, Ron, "RTTY Signal Bandwidth," *RTTY Journal*, April, 1977, p. 5.
4. *ITT Reference Data for Radio Engineers*, p. 23-8, Indianapolis, Howard W. Sams, 1975.

✓ Reader Service—see page 323.

A 28¢ Touchtone™ Mod

—something for (almost) nothing

David J. Brown W9CGI
RR 5, Box 39
Noblesville IN 46060

Repeater owners, remote control users, and touchtone™ fans in general—take note! This article will show you how to get 24 decoded functions (on 16-key TT pad systems with A, B, C, D) or 19 decoded functions (on 12-key TT pad systems with 10 numbers, the *, and the # only) from your present 16- or 12-function systems —and very inexpensively.

Depending on how you decode your TT tones at the receiving end, this modification will cost you from 28¢ to 76¢ at January, 1978, prices on TTL logic (source is Poly Paks®) Since nearly all the up and working systems use 567 tone decoders that output a low for a decoded number (as do many other systems), and these lows are inverted before the low group/high group ANDing to get a single function, I will concentrate on those systems. Mine is shown in Fig. 1. By just comparing it to yours, you can tell what may be missing on yours. I have duplicated my TT decoder section for clarity. It has nothing to do with whether you can get the extra 7 or 8 functions, and is shown only because I use an extra enable/disable function line and three input gates on TT decoding. This is not required, so, if your system uses the more common two-input gating system, don't fret.

Since I already had all of the ICs with letter designations, and half of IC-D wasn't being used, I only had to use unused functions of ICs already there, except for adding ICs 1 and 2. While we are on ICs 1 and 2, I will add that they may be 7400s if you want TTL-compatible outputs for your extra added functions. If you want uncommitted outputs to run outside-world devices (small low-voltage/current relays, etc.), as I did, you use 7403s with no wiring changes on the sockets. This is nice if you later change your mind or want four of one and four of the other.

To explain the system, first let me cover normal TT decoding. For any valid TT tones, you will have one decoded low group and one decoded high group as TTL lows on the inverter (ICs A and B) input lines. Depending on the function, this will be a high on one of the L1 to L4 points, and a high on one of the H1 to H4 points. This will 2/3 enable one of the 3-input gates in IC-E through J. The common line you see connected to all of the gates in IC-E through J must go high to finish the decode enabling. Example: If this line is high and we receive a low group 697 Hz tone and a 1209 Hz high group tone, L1 and H1 will be high, and the number 1 will be decoded (TT).

As for how that common line gets high, please take the above example again. A low on IC-A-1, causing a high on IC-A-2 and L1, half enables IC-1-1. Since this is a TT tone we are receiving, there is also a high group tone (1209 Hz), and, if there is a high group tone (as there is for any valid TT tone), IC-C-8 is high. Invert this through IC-B-11 to 10 to HTT for a low. That low is applied to IC-D-10 and

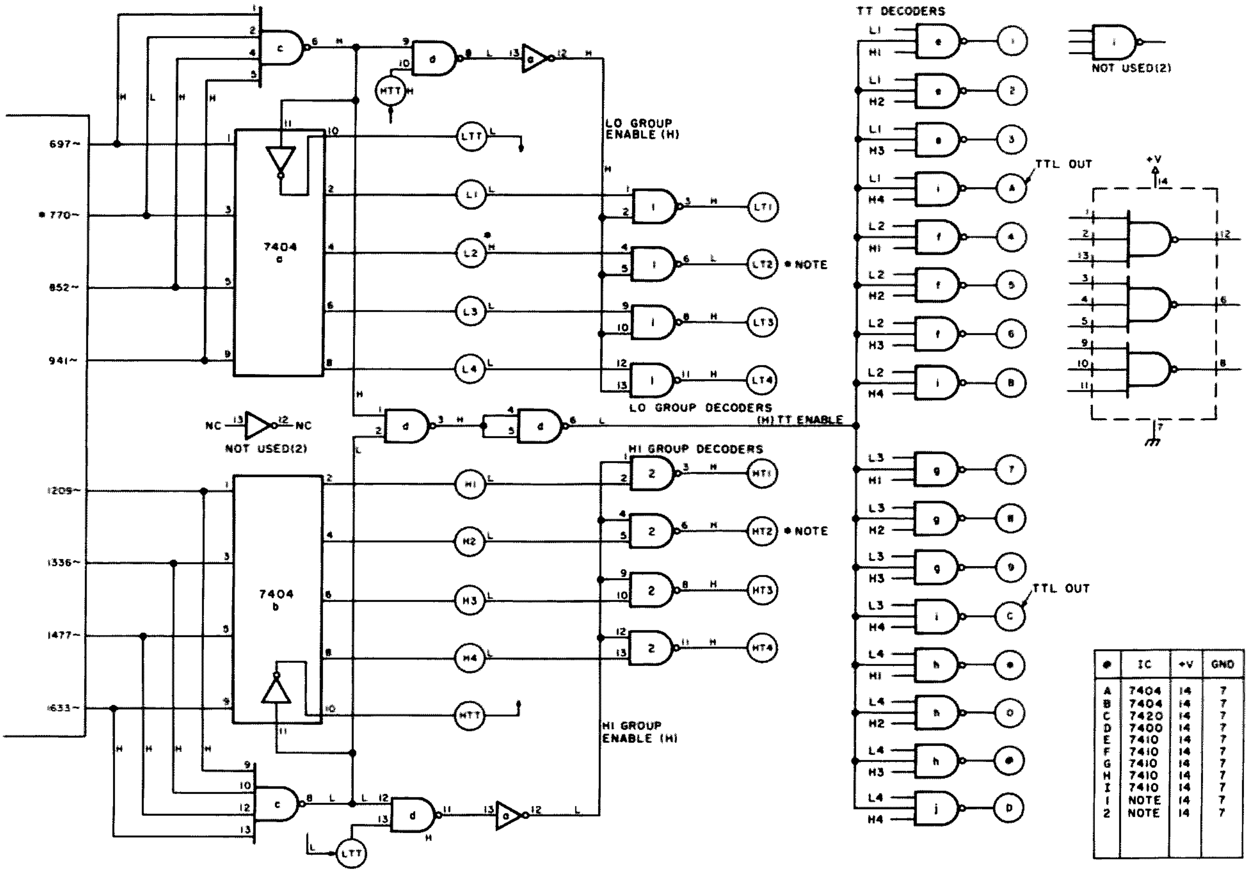

●	IC	+V	GND
A	7404	14	7
B	7404	14	7
C	7420	14	7
D	7400	14	7
E	7410	14	7
F	7410	14	7
G	7410	14	7
H	7410	14	7
I	7410	14	7
1	NOTE	14	7
2	NOTE	14	7

*Fig. 1. *Note: ICs 1 and 2 can be 7400 for TTL outputs or 7403 for uncommitted collector outputs.*

disables IC-D-8 (high), through IC-A-13 to 12 (low), and disables all the single low tone group decoders, IC-1. When a low group tone is also present (as with any valid TT tone), following IC-C-6 (high), through IC-A-11 to 10 (low) and LTT, to IC-D-13 disables IC-D-11 (high), through IC-A-13 to 12 to all of IC-2, disabling all the high tone group single tone decoders.

Going back to IC-C-6 and IC-C-8 (both high on TT), these highs go to IC-D-1 and IC-D-2 to form a low at IC-D-3. The last gate in IC-D is wired as an inverter and causes the low at IC-D-3 to be a high at IC-D-6. This 1/3 enables all the TT decoders and says a valid 2 tone TT signal is present. Since we chose the example of 697 Hz and 1209 Hz (TT function 1), the low group (697 Hz) fully decoded as a high goes to 1/3 of a gate in IC-E, and the high group (1209 Hz) fully decoded as a high goes to another 1/3 of the same gate in IC-E. Along with the TT enable high, this causes the function 1 to go low and the TT number 1 is decoded.

If you follow the asterisk in Fig. 1, I have shown also the single tone (770 Hz) decoding. All the little L and H characters indicate low and high, respectively, and refer to gate or line status for this one particular (770 Hz) example. You will see that, with the high group tone of any kind missing, IC-C-8 is low, disabling all the TT decoders via IC-D-2 (low) and IC-D-3 (high), through inverter IC-D-4 and 5 to 6 (low). The missing high group tone and IC-C-8 (low), through inverter IC-B-11 to 10 (high) and HTT, causes IC-D-10 to be high. Since there is a low group tone (770 Hz), IC-C-6 is high and enables the other half of IC-D-9 and 10 to 8 and makes IC-D-8 low. Inverted through IC-A-13 to 12 (high), all the low single-tone decoders are 1/2 enabled. Since the low-group-only tone is 770 Hz, IC-A-3 is low and IC-A-4 is high and enables the other half of IC-1-4. This causes a low at IC-1-6 and a fully decoded 770 Hz function at IC-1-6.

I confess to a bit of foxy maneuvering at this point. This whole business (seeing as all I had to add were ICs 1 and 2) was done originally to detect the independent high and low tone group decodings and only light LED indicators. It was not until the unit was all built and running that I decided why not use these extra functions to do things on the receiving end with a bit of extra circuitry to define single tone versus TT pair tones. It greatly reduces the necessary hardware to handle station keeping such as changing from tight to loose squelch on the repeater receiver and resetting the time-out timer if someone over-talks it. That way, none of the original 12 or 16 functions are used up or confused, like on an autopatch repeater. These can be used as completely separate functions.

While I am covering bits of honesty, I should mention how this whole thing works from the sending end. Following Fig. 2 should help. This is nothing more than the face of a TT pad. As long as you push single buttons, you get dual TT tones corresponding to the key pressed. If you push any adjacent pair of keys on a standard TT pad, you get only the single tone for that row or column. Following Fig. 2, if any pair of the column keys such as (1-4), (4-7), or

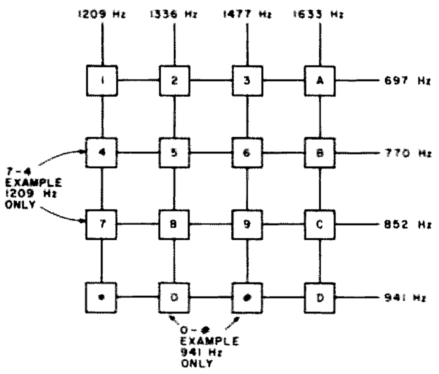

Fig. 2.

(7-*) are pushed, that column tone results. Columns produce the high tones, going from lowest to highest as you go left to right [i.e., left column = 1209 Hz through right column (if present A, B, C, D) = 1633 Hz]. Any row pair that is pushed produces a low group tone, going lowest to highest as you go top to bottom (i.e., top row = 697 Hz through the bottom row = 941 Hz). A row pair example to get 941 Hz would be (*-0), (0-#), or (#-D). Any pair example in a row or pair in a column seems to work, but adjacent pair keys are easier to hit and better insurance that you have both keys down.

As for rules to follow when sending, be sure to hit and depress both keys of a pair at the same time and release at the same time. If you hit one key and then add another, you will get a TT tone and single tone sequence not desired in this decoder. Changing the decoding further, you could put this to advantage in two-number systems. The Indianapolis 16/76 machine has a very interesting and helpful system function that is TT-tone controlled. By pushing the series 71 through 79 (excluding 77) TT numbers, a tape is played back to you giving you one track of 8 possible tracks worth of prerecorded messages. As you might guess, the number 7 followed by 6 (76) gives you all the information about the 16/76 machine operations and format. Adding more housekeeping functions could be done by adding another full two-number set decoder group (quite a few ICs) and using the 10s or 80s, etc., numbers just as the 70s are now used for the tapes. Just as easily, and for much less expense, at least 7 more functions could be added by my method with no changes made out in the field by the sending stations.

The sequence 7-6 would still be a decoded 7-6 and activate the tape that explains 16/76. Using the 7-4 for a single tone example, since they are a column pair, and 7-6 is neither a column nor a row pair, if 7-4 is pushed in sequence form, the 74 tape would still play. If the 7-4 were pushed together, however, a single tone of 1209 Hz (left column) would result, causing a low decoded at HT-1 in Fig. 1. This could be used for whatever you like.

Since I have used our 16/76 machine which Indy amateurs are quite proud of for an example, please allow me to issue an invitation and a couple of words of warning/advice/help. Should you pass through our town (or within about a 25-mile range), and want to dial up the tapes, you must observe two simple rules. The first is: The dial-up only works if preceded immediately (without dropping carrier between) by audio. A valid and appreciated by us (and the FCC) way of doing this is: Using my call only as an example—"This is W9CGI accessing tapes." Send first TT (7) for about 1 second, then send second TT (any but 0 or 7) for about 1 second, then drop carrier. To allow for any of the emergency-type break-ins that might occur, the tape was done so it can be "talked over," i.e., if another station has emergency traffic, and a tape is playing, he has only to key the mike and start talking, and the audio on the tape is dropped below him by several dB. The next rule is: Please allow 45 seconds minimum between the end of the last tape message sent and the next request to allow for rewinding of the 8-track player system. Thank you.

Into every life a little rain might, if not will, now and then fall. I confess, I do not know what happens when the newer so-called (but not) TT pads are used that are little keyboards and IC generators (Heath Micoder™ and keyboard and Motorola TT-type tone IC, etc.). Pushing two keys at once in these systems produces results I can't begin to predict, having never owned or even operated one. You can only try it and see. I am reasonably sure that the manufacturer would not be so careless as to allow a catastrophic failure to occur on a two-key press, since it is so easy to do it accidentally, but you may get one or the other of the dual TT tones, or not any tone at all—instead of the single tone desired. Systems considering my add-on decoders should poll their members using it for the number of "non-real" TT pads or the results of two key press actions on the "non-real" TT pads, or keep these as station housekeeping control tones for use by control stations having real TT pads.

For the miniscule cash outlay, this system modification has been infinitely handy to me for use as everything from a trouble-shooting aid to a high/low tone pass filter alignment aid and a free (almost) station control. In my opinion, it would pay to use the 7403s for both ICs 1 and 2 and connect the outputs up to +5 volts through limiting resistors and LEDs, even if you are going on to TTL inputs. This still gives a ground or +5 volts output usable as a TTL input and adds the ability to monitor what is going on in the few parts the average system will have to add on. You then have a visible panel status indicator (on when that single tone function is decoded).

While I can't imagine anyone finding trouble with this that I can help with (i.e., I can't show you a solder splash, short, etc.), I remain, as always, at your service for an SASE. The wiring for the TT decoder portion (7410s) is not given on each IC-E through J, but does appear in Fig. 1 for a single 7410 for two reasons: This is not part of the modification and new system, and, if you duplicate it, you can hand wire it to suit your own board layout and fill in your own numbers on a copy of the page from this magazine. I muttered the first time I saw this in another article using a lot of ICs but it worked out beautifully for me, and the copy of the nice neat schematic from the magazine with my numbers neatly penned in is now a unique diagram for my particular board—great for troubleshooting. I hope this works out well for you, also, if you are duplicating the whole system of Fig. 1. ■

Space Age Surplus

—your own Saturn V?

Bill and Katha Endress
1128 Marygon Street
Kissimmee FL 32741

With the tremendous advances made in electronics and the termination of the Saturn and certain other space programs, today's surplus "junkie" has a whole new world to explore. Let us take a trip to a local surplus store and see what kinds of goodies a computer hobbyist, turned bargain hunter, can find. There is a super surplus store in Orlando, Florida, called Skycraft Parts And Surplus. It is owned and operated by Bob Fiedler, and it has a wide variety of both government and industry surplus.

In years past, a trip to your local electronic surplus store meant hours spent gazing at racks of armed forces hardware. These units were usually transmitters, receivers, and transceivers. They came in shockproof heavy-duty cases, and the components were sprayed with varnish to protect them from the elements. The units were designed to withstand a war. They operated from various power sources that usually operated at 400 Hz. Numerous articles filled the magazines on how to convert this surplus to civilian uses.

The surplus that one finds today can be divided into two broad categories: tube surplus and solid state surplus. The older tube surplus is characterized by vacuum tubes and generally larger physical dimensions. Most of this equipment was used by the military, with only a smattering of industrial surplus.

Unless you have interests in the ham field or you need a particular device for a specialized application, my advice to you is to stay away from tube surplus. Even if you buy one of these units with the thought of stripping it for parts, you will still come out losing. In these units, most of the capacitors are quite old, the resistors won't be precision resistors, and the power supply components will be designed for the higher voltages necessary to operate vacuum tubes.

The newer surplus is an outgrowth of the tremendous advances made in industry and the termination of several of our space programs. We can divide this newer surplus into two subcategories: space hardware and industrial hardware.

With the advent of the space shuttle, two important things have happened that have released and will continue to release great quantities of space hardware into the surplus market. The first thing that has happened is the termination of the Saturn program. Most of the electronic hardware that was

Entrance to shop.

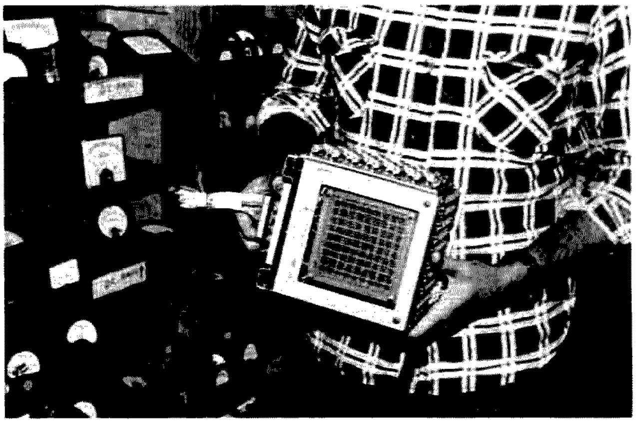

Core memory.

used in the Saturn program was designed specifically for that program and cannot be converted to the space shuttle program.

The second major factor in the release of space hardware is in the cost effectiveness of the space shuttle. Once the shuttle becomes operational, sometime in the early 1980s, all of the NASA and most of the military satellite launches will be performed by the shuttle. The reason for this is that it will be millions of dollars cheaper to launch the reusable shuttle rather than expendable boosters. Both NASA and the military are already planning the shutdown of most of their launch support facilities at both the eastern and western test ranges. This will assure us of a continuing supply of space hardware coming on the market.

Industrial surplus is mainly the result of the tremendous expansion of technology in the electronics industry in this country over the last decade. With the development of integrated circuits and large scale integration, transistorized equipment is becoming obsolete. This has become even more evident in recent years as energy costs have shot sky-high. Transistorized equipment requires not only a greater amount of operating energy than the newer ICs, but also, if the unit is large, it needs substantial amounts of cooling energy as well. With new technology becoming available to industry every year, more and more equipment is becoming available to the surplus "junkie."

The important difference between the older tube-type surplus and the newer transistorized surplus is that the power supplies for the transistorized hardware usually operate on 110 volt, 60 Hz power sources. These power supplies provide well-filtered low-voltage, high-amperage outputs. Another big bonus is that, in many cases, when you plug in a newer unit and turn it on, it works! No tricky conversions are necessary.

Let us take a look at some ways to help you select pieces of equipment to stretch your surplus dollar further. Equipment is sold in four different stages of assembly: individual components, circuit boards, partially disassembled units, and intact units. The surplus shop pays someone to disassemble the intact units into saleable portions. The more work he puts into a unit by taking it apart, the more you will have to pay for the components.

Individual Components

You can usually find any value of capacitor or resistor in any quality or size among the individual parts sold by the surplus store. You may have to look a little harder for the particular transistor or IC that you need. When buying transistors and ICs, remember that you are buying used or factory second items in most cases. This may be fine for breadboarding circuits or for noncritical circuits, but do you really want it in a critical circuit? Most merchandise in the surplus store is sold as is, no refunds or exchanges. Individual components can be a good buy to help you breadboard a new circuit, but, generally, this is the most expensive way to purchase surplus.

While checking out the individual parts area, look for unusual items. I recently paid $15.00 for a 12K ferrite core memory unit. I'm not sure just what I will do with it yet, but, in the meantime, it makes an excellent paper weight!

Circuit Boards

I have mixed emotions about buying circuit boards. Sometimes you can find a real bargain, but you can also find a lot of junk. Skycraft Parts has bins of circuit boards to choose from, priced at three or four for $1.00. You can even buy a barrelful for $10.00. The boards may be populated with transistors, ICs, or even core memory. The capacitors are usually quality capacitors and the resistors are, in many cases, 5% precision or better.

Whenever I buy a circuit board, I buy only those boards that I can pick out and examine before the purchase is made. I usually pick out premium boards and therefore pay premium prices. One of my favorite purchases was a circuit board that I paid $7.00 for. It had no electronic components on it at all. It was instead covered with over one hundred 14- and 16-pin wire-wrap sockets. This put my cost at less than 7 cents per socket. I also managed to save most of the wire, adding further to my savings!

When picking out circuit boards, try to have a definite goal in mind before you even enter the store. Do you need ICs, or perhaps heat sinks? Are you after resistors, or are you looking for reed relays? Once you know what you want, you will be in a better position to buy the circuit boards containing the components that you need, and not just a lot of junk.

When I look at circuit boards, I look at the ones with lots of ICs. I check to see if they are of the 7400 or TTL series of ICs and whether or not they are in

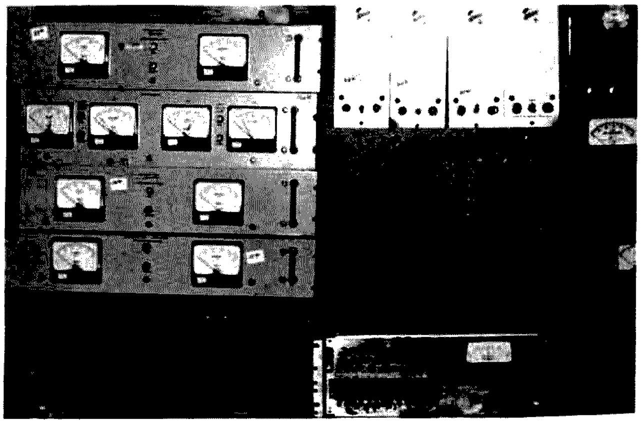

Power supplies.

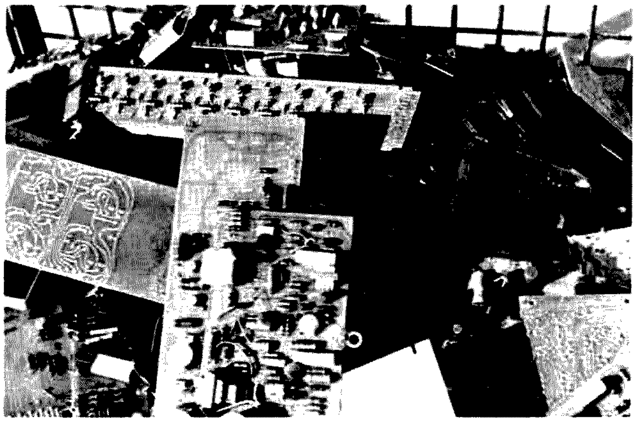

Circuit boards.

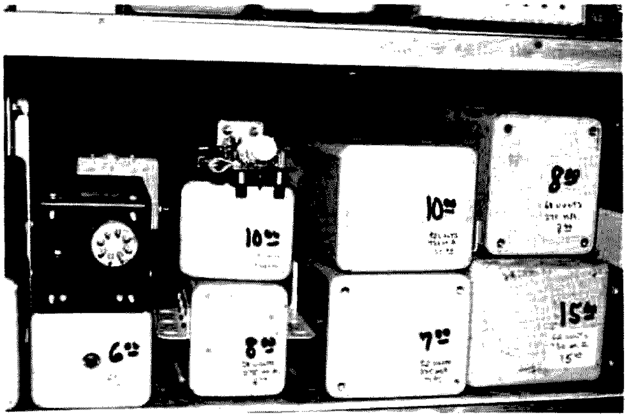

Power supplies and transformers.

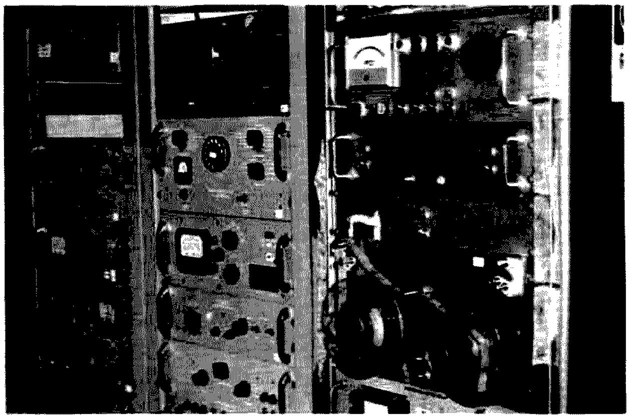

Complete units.

sockets. I have paid as much as $14.00 for just one circuit board, but it was covered with fully socketed 7400-series ICs.

Partially Disassembled Units

This is where I start to get turned on. Partially disassembled units include such items as power supplies, circuit board card cages, diode assemblies, switch and light panels, and a whole host of other goodies. If you are in the market for switches or lights, or other items in a quantity, this is the best way to go. You don't pay the cost of someone completely disassembling the unit as with individual components. On the other hand, you aren't paying for a lot of excess baggage either. Among the partially disassembled units, you can usually find power supplies to fit both your power needs and your budget.

When purchasing a power supply, check to see if the input and output terminals are clearly marked. You can purchase the best power supply available only to find it is useless if you don't know which input and output connections to make. All you can do then is strip it for parts. I don't recommend this. Any supply having the quality components necessary for use in computer circuits is usually in working condition. You will pay a premium price for these units. This is too expensive a way to go just for parts.

Intact Units

This is my favorite way to buy surplus. If you shop wisely, you can get more for your money here than in any other form of surplus buying. Not only can you get your money's worth out of the parts' value, but many times you can also find working units.

When shopping for completely assembled units, I look for several things. First, I check to see if it was put together with nuts and bolts, as opposed to rivets. Not only do nuts and bolts ease disassembly, but you also end up with a good assortment of hardware when you are done. Most of the newer units use circuit boards and plug-in modules. You usually end up with a card cage suitable for a home brew project in addition to a good assortment of parts. If it is possible to remove a circuit board before buying the unit, do so. While looking at the board, check to see what precision the resistors are, whether the unit uses ICs or transistors, and the overall construction and condition of the board. These can all be used as indicators of the quality and the age of the unit.

Occasionally I will find a unit that uses transistor sockets for its transistors. Check to see if the power supply is visible. If so, look for a heavy-duty transformer, large electrolytic capacitors, and heavy-duty power transistors mounted on large heat sinks. Also look to see if there is a line cord with a conventional plug. These are all indications of a heavy-duty power supply that might still be in working order. Check the front panel to see if it contains a meter to check the performance of the power supply or gives a hint of the voltages put out by the power supply. While at it, check for fuses. Many times the output voltages are protected by fuses. These may also give you an indication of the output voltage and current. Above all, when checking out a unit for possible purchase, check the price and ask yourself, "If the unit is stripped for parts, will I get my money's worth in parts alone?" Unless the store owner is willing to let you plug in the unit to see if it is operational, never assume a unit is in operating condition.

Even if the unit lights up, the only thing you should assume is that the power supply works. Take along your voltage meter and check whatever you can in the store. I recently heard of a local electronics firm that sold 20 Tektronix oscilloscopes to a surplus dealer for $90.00 each. The only catch was that the CRT was burned out in each scope and a replacement CRT would cost $1200.

I tend to prefer space hardware over industrial hardware. These units use only the highest quality components. Most of the contacts are gold-plated and many of the soldering posts are silver-plated for better connections. Also, since these units are on the market because of a phaseout, many of the units are still in working condition.

While many of the items for sale in a surplus store have changed over the last few years, one thing remains: You can still spend hours browsing the shelves of your favorite surplus store in search of that ultimate bargain.■

Oddly enough, only a few of the many surplus houses around the country are well enough organized to advertise, so most of them are unknown except to a few local hams and experimenters. If you have a surplus store which hams, computer hobbyists, or experimenters might find of value, please send the name, address, and phone number to us and we'll publish it. Also include the name of the proprietor. —Wayne.

Stirling M. Olberg W1SNN
19 Loretta Road
Waltham MA 02154

An X-Band Transceiver

—more 10-GHz fun

The system described in the following paragraphs is made up of surplus microwave components and other equipment used in the home and mobile station here at W1SNN. Only one piece is described for construction because the main components are now available to amateurs and made for amateur frequencies. The device we will construct is not too difficult to make, but several pieces will require the use of a lathe.

The method used to control the frequency of the Gunn diode oscillator in the transceiver is not new. It is often used in radio astronomy equipment although in that endeavor, spectral purity of the rf output is far superior to that achieved here at W1SNN. Many amateurs have used the same idea in days past to control klystron local oscillators for their

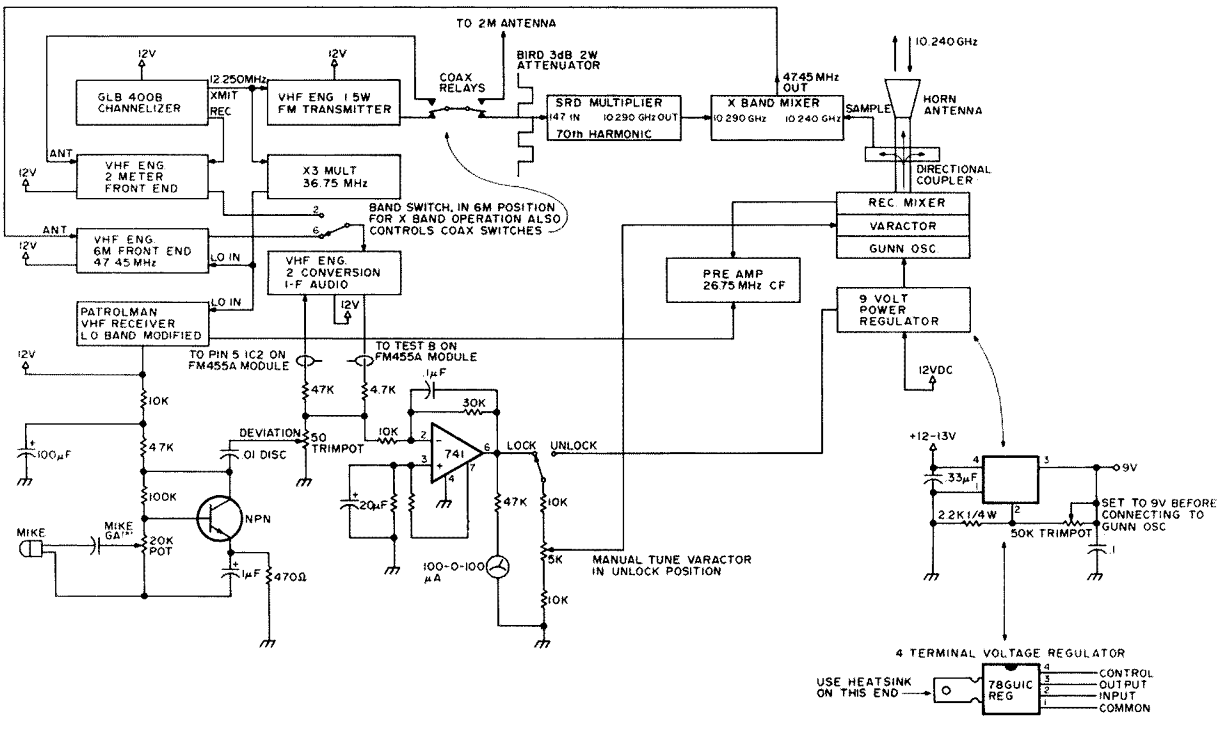

Fig. 1. Block diagram and simplified schematic of 10 GHz synthesizer.

receivers. Let us examine a block diagram of my approach (Fig. 1). I hope you will come up with better ways to do the trick, since we need more activity on 10.250 GHz.

It starts out with a GLB-400B channelizer. The GLB drives a 1.5 Watt two meter transmitter and receiver and an appropriate two meter antenna through two coaxial relays which allow the use of the two meter gear for liason when setting up on X-band during field days. The other output of the second coaxial relay feeds into a comb generator containing a step recovery diode (SRD) or snap varactor which generates the appropriate X-band harmonic.

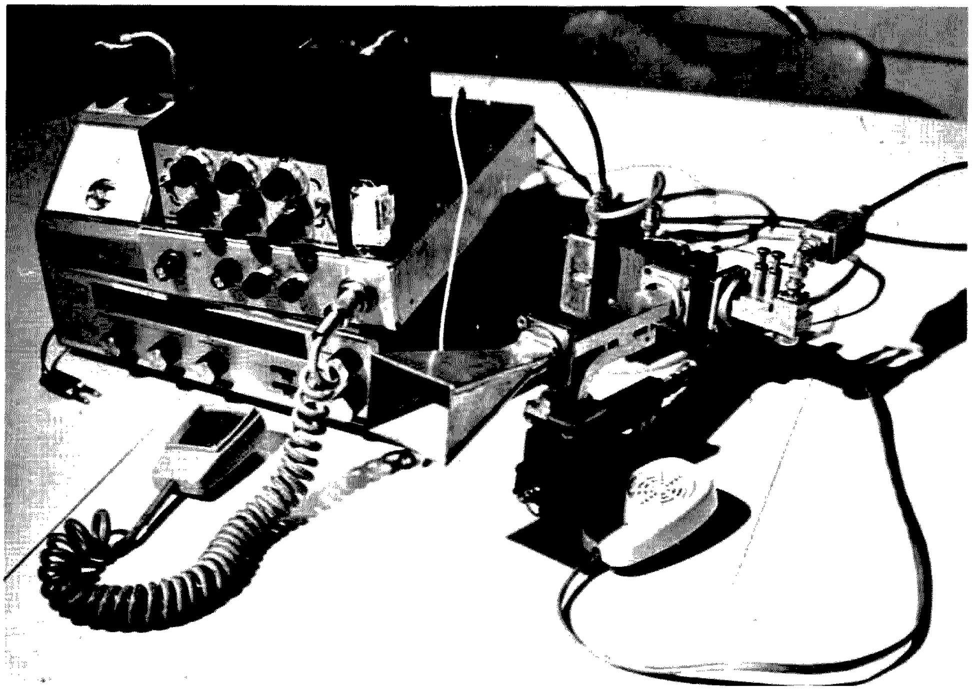

The X-band phase locked rig set up on the kitchen table photo studio. The meter on the left is used for tuning up. The GLB sets on top of the two and six meter receiver. The 1.5 Watt two meter rig is in the same chassis. The box that hangs on the right-hand detector mount is a preamplifier. On the left, a small box contains the servo and modulation electronics.

The comb generator receives its power for harmonic generation by setting the GLB transmit output to 12.250 MHz, which is multiplied up to 147 MHz through the VHF Engineering 1.5 Watt two meter transmitter. The output comb from the SRD or snap varactor produces a usable output at 10.242 GHz. This output is fed into a microwave hybrid mixer and mixed with a sample of the Gunn oscillator's output through a directional coupler to produce an i-f output at 47.45 MHz.

A VHF Engineering six meter front end set at 47.45 MHz serves as the second conversion to the 10.7 MHz i-f input of the two meter receiver i-f amplifier and associated circuits. The i-f input of the two meter receiver can be switched to either the two meter front end or the one on six for liason use, or for synthesizing the X-band transmitter. The six meter LO input comes from the 12.250 MHz output of the GLB through a tripler. The 10.7 MHz i-f is further converted down to 455 kHz where the discriminator output voltage is fed into a servo amplifier. The servo electronics are complete with an integrator and are used to tune a varactor mounted in the Gunn oscillator cavity. Thus, the system becomes locked to the GLB channelizer.

A second receiver is made up by modifying an old Radio Shack two-band Patrolman police monitor. This receiver, which is

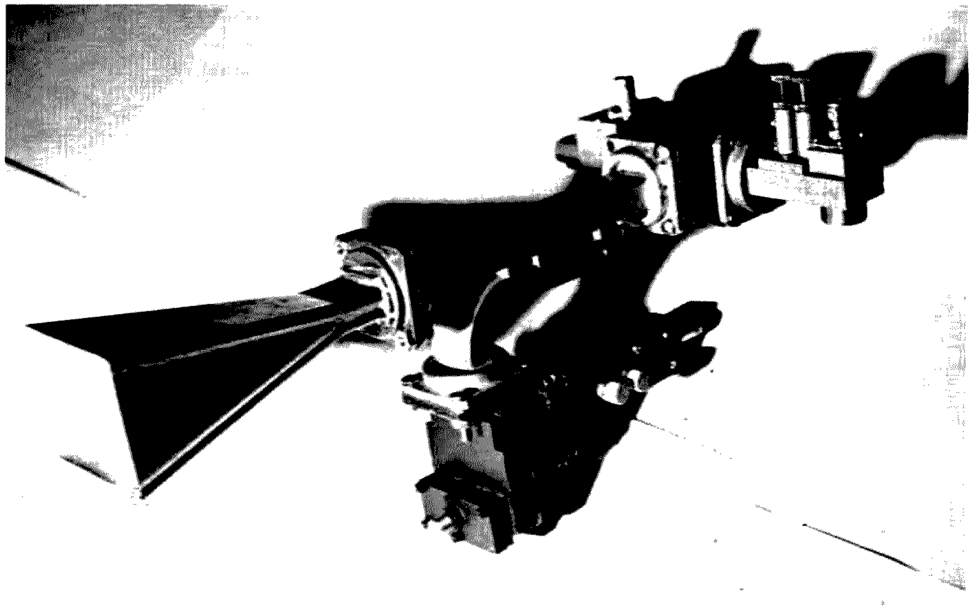

The rf plumbing stripped of all the electronics. On the right is the receiver detector which feeds into a circulator. On the left is a Gunn oscillator. The large square unit fastened to it is the varactor used to tune the Gunn oscillator.

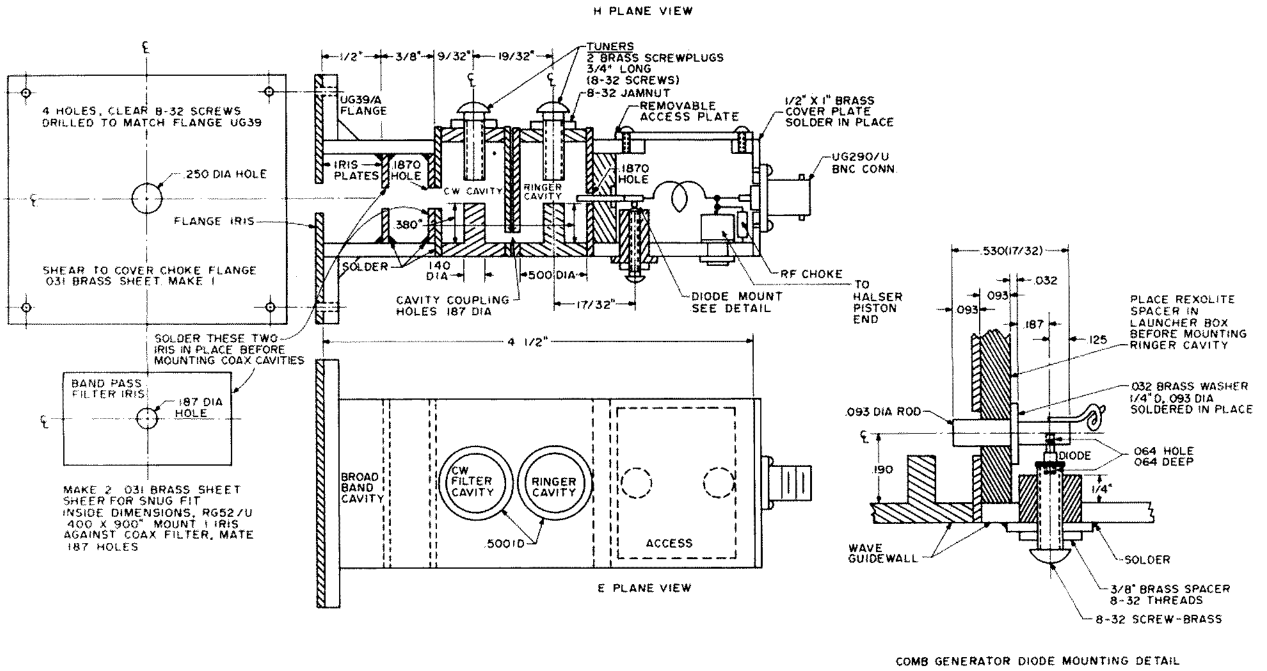

Fig. 2. Harmonic generator construction details.

tunable (or frequency controlled by the GLB synthesizer through the same tripler used above) is used as the receiving i-f system at 26.75 MHz when locked to, or at, frequencies that can be tuned across the X-band range. Modification requires the addition of a preamplifier that would match the output of the receiving mixer to get the noise figure down to a useful level. This receiver does not have any band-narrowing filters in its i-f system (10.7 MHz) and is ideal for the searching that is required for stations that obviously will not be on your frequency. It also has 12-volt capabilities which allow it to work in the car. This receiver could be replaced by another six meter converter and VHF Engineering i-f audio module as is used in the two meter setup. Until this change is made, we will continue to make our contacts with the old police job which so far has given excellent results over the short-path QSOs with WA1NWF. Its bandwidth is wide enough that once the signal is captured, small drifts can be compensated for by readjustment. It is not an easy task to make contact with another station unless you both are locked on the same frequency, so a tunable receiver, for the time being, is a must. Another amateur, who is using a similar idea, has a police scanner in use as the search receiver. The crystal oscillator has been modified to be tunable and is scanned in the same manner that it would be if it were crystal controlled. This provides a fully-automated scanning system so he can drink his Coors™.

The microwave plumbing used in this set is composed of pieces either gathered from surplus houses or constructed by the author. It is quite a task to make a Gunn-diode oscillator/mixer assembly such as the one used in this system. The frequency control of the oscillator is accomplished by voltage-controlling a microwave varactor located within the oscillator cavity. A ferrite isolator, acquired from a police radar set, and incorporated with the tunable crystal mount completes the mixer half of the unit. The construction of these devices is a formidable task unless a well-equipped microwave test facility and a large amount of machine work can be accomplished. Therefore, it would be worth the constructor's time if he incorporated a Microwave Associates Gunnplexer™ which has all three of these items, as well as an excellent horn antenna.

The Comb or Harmonic Generator

Snap varactor or step recovery diodes are names given to these semiconductors by two of the leaders in this field. Undoubtedly there are other names, but, since this article started with these nomenclature, we will keep them. These semiconductors have a property which, regardless of what it is called, performs as follows: An epitaxial diffused varactor is designed to store a charge when it conducts in its forward direction. It conducts for a very short time until this charge is pushed out by the driving rf signal. Then the conduction ceases very quickly. This is called the "lifetime" and is a way to measure the period that the varactor will store a charge, and the snap-time (or step-time, as it is also called) ceases. These diodes sometimes require an external bias, but ours will be used in the self-bias mode.

The effects described produce a series of pulses, which cause, in our generator, the first cavity to "ring," producing a train of damped waves at a microwave frequency. The output of the "ringer" cavity is then directed into a second cavity, which, by virtue of its high Q, propagates a more CW-like signal to its output termination. In the unit described for construction, these cavities are coaxial for the first two, and waveguide bandpass cavities for the last two. Needless to say, much care will be required in the construction of the unit. See Fig. 2 for details.

The diodes can be obtained from many manufacturers. Two are listed, with references, at the con-

clusion of the article. The two references are certainly worth the reader's inspection in regard to future generator construction.

The parts required for this section are easily obtained. They consist of a three-inch section of copper "small X" waveguide (RG-52/U), two ½-inch i.d. sections of brass pipe with 1/32-inch wall thickness, and four end-plugs for these pipes that must be machined and drilled to size. Also required are a cover, UG-39B/U, which is soldered to one end of the waveguide, and a small brass box which is constructed from another section of the same waveguide. Construction of this unit should be easily accomplished from the mechanical drawings. The iris coupling consists of holes found near the bottom of each coaxial cavity. The plate used to cover the choke flange, which is the output of the harmonic generator, is the frequency controlling element of the fourth filter, a waveguide bandpass filter.

The tuning screws found on the top of the waveguide must have the large plates loaded to make sure that firm connection is made to the wall of the waveguide. Once adjusted, the jam nuts can be firmly set since no further adjustment will be required, but be sure that the nuts squeeze into the lock washers.

Begin construction of the SRD assembly by marking off the two holes for the circular cavities. These two holes are drilled through the waveguide walls and are spaced double the thickness of the pipe wall, so the material left in the edges of these two holes will be removed. It is best to drill both holes with a smaller drill and then line-ream out the remainder of the material until a tight fit is achieved. The two pieces of ½-inch tubing should now touch each other on one side.

Insert each of the cavity tubes into the holes so that the two iris slots near the bottom of each tube face each other. At the center of each of these cavities, the holes shown in the drawings should face the open ends of the waveguide. These are the exit irises of each of the coaxial filters. Next, install the bottom plug which should be the machined piece which makes up the coaxial post for each cavity. All of these pieces should be turned on a lathe so that they provide a very tight fit into the tubing. Make sure that the plug ends of these cavities are parallel to the bottom wall of the waveguide and that the iris holes near the bottom are facing each other. Install the top plugs, which have the tuning studs, into the top of each coaxial cavity. These, too, should be machined for a very tight fit.

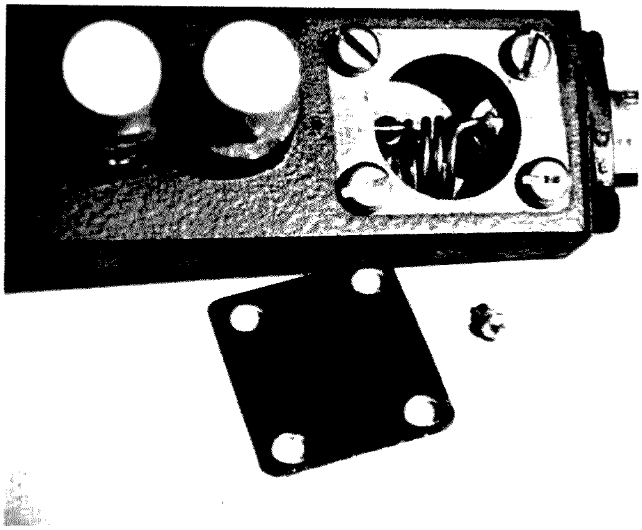

This view shows where the piston capacitor is located. The SRD is in the foreground near the inspection plate.

When all of these parts are aligned and you are sure of the correct positioning as shown in the drawing, gently heat the assembly to a temperature that will cause soft solder to run, apply flux to each joint, and run in the solder. Use only a very small amount of solder; just enough to make a good electrical joint. Let the unit cool before attempting the next step.

On one end of the waveguide, install the inside rectangular iris plates as shown. Then install the output flange on the end of

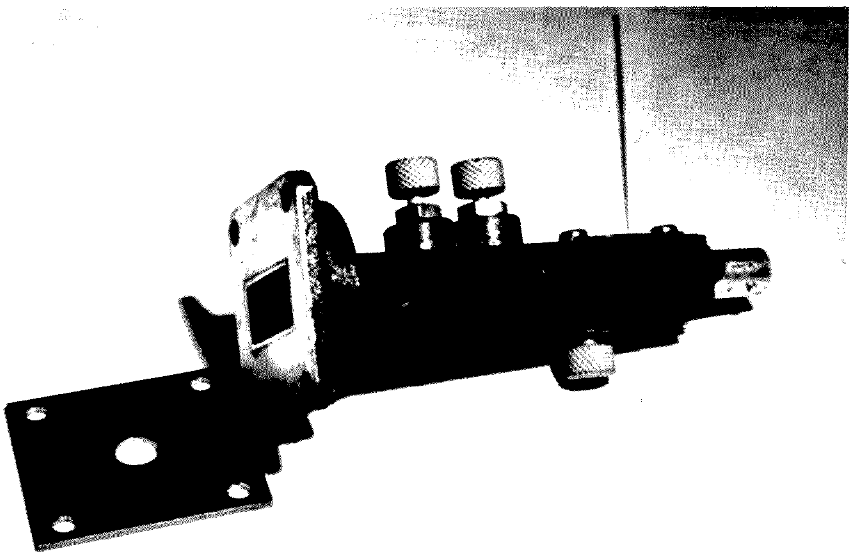

Side view of the SRD comb generator which provides the harmonics for mixing. The two tuners on the top of the waveguide are inserted into the tops of the coaxial cavities. On the bottom, the SRD mounting stud is in view and just behind it is the piston capacitor tuning plug.

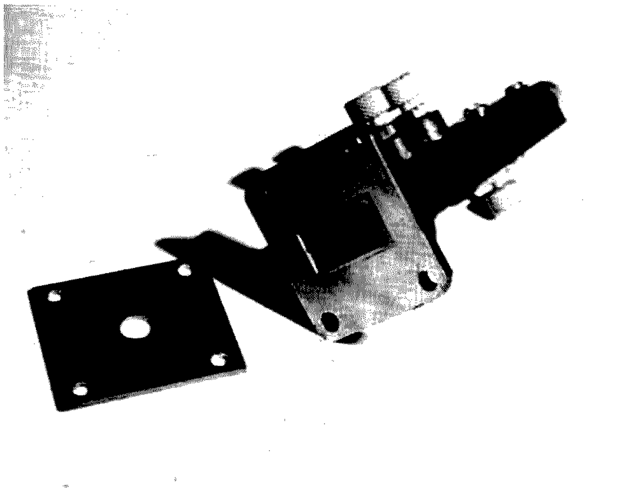

Front view of the comb generator shows the second internal iris which forms half of the bandpass filter. The large flat plate near the flange is the output iris which makes up the second half of the bandpass filter. It is held in place by the mounting screws which fasten the whole unit to the directional coupler.

the waveguide. Again heat the assembly, flux the iris plates and the flange, and apply solder. Care should be taken not to overheat the waveguide such that the cavity assemblies are disturbed. A four-cavity assembly has been completed and is now ready for installation of the SRD and rf launcher.

Examine the drawing of the comb generator diode mounting detail on Fig. 2. This assembly and the driving coil which is tuned to two meters make up the rf launcher. These components must be carefully assembled prior to installing the SRD in place. This diode is a small pill which has a form factor known as "style 31" in the microwave semiconductor trade. To install it, place the end with the large flange near the small circular protrusion into the end of the prepared 8-32 screw, after the screw has been run up through the threaded bushing so that it's just visible. The hole in the end of this screw should accept the diode with a little resistance. Do not push sideways on the diode or you will fracture the seal. When installed, run the screw into the bushing so that the other end of the diode engages with the launcher line. The launcher should have a matching hole drilled into it in the correct place. DO NOT tighten the diode—just a firm fit will do. All of this activity is accomplished through the inspection hole on the top wall of the waveguide. The diode cannot take much heat, so any soldering of the launcher rod must be done before its installation.

When the assembly is completed, replace the access plate and connect the output of the two meter gear through the attenuator shown in the drawing. This pad will reduce the output of the transmitter to about 0.5 Watts which is all that is required to drive the diode. It can take only slightly more power, so take care!

Put the output of the comb generator into a wavemeter and detector. The detector will have to drive a very sensitive meter if the output is to be seen. There should be at least 20 microamperes output and should be indicated at the frequency described.

If a smaller indication is shown, it should improve when the tuning screws on the top of each cavity are adjusted. The frequency meter should be left on the prescribed frequency of 10.240 GHz. Adjust the output coaxial cavity, which is the one nearest to the flange, for maximum and then peak-up the ringer. It is possible to be 147 MHz higher or lower since this is a comb generator, so watch the frequency meter. If a spectrum analyzer is available, as was to the author, little problem will be encountered in adjusting for peak output, but if not, it will require judicious observation of the frequency detected by the frequency meter cavity. When it is correctly adjusted, one very large peak right on frequency can be measured. When it is slightly off peak, a number of peaks will be observed when the frequency meter is tuned through the desired output. With a little practice, full output wil be assured. When adjustments are completed, be sure to tighten the two jamb nuts that are on the tuning screws. No further adjustment will be required if it is done right as these nuts do not work loose.

We are now ready to try to lock up the system to the channelizer, hook up the harmonic generator to the system, and determine that all of the servo connections and indicators are in order. Turn on the system and look at the center scale tuning meter. It should be right on the line. To prove it is locked, and will also lock again, open the lock/unlock switch and watch the meter swing one way or the other and then snap back to center when the switch is closed. With the lock switch closed on the search receiver, you should be able to hear yourself when you speak into the mike. Full duplex can be used on this frequency.

The circuitry shown for the power supply, servo electronics, and modulator are simple and should give little trouble. The output from the VHF Engineering i-f strip discriminator should be used as recommended from the manufacturer for driving a microammeter. The meter, however, is replaced with the circuitry shown, and then the meter will be connected to a new set of connections.

Modulation of the varactor requires a little care. Very little modulation is needed as full FM is used. If you are working a station that uses a wideband receiver, then a greater swing will be required. However, if you are working one that has a system like the one described, then the deviation must be adjusted to fit his receiver using the deviation control.

Tests throughout the fall have gone on with this rig. It is portable, by virtue of its several boxes, and gets hauled up on Prospect Hill in Waltham on Sunday afternoons. Prearranged contacts have been made over 30-mile paths with little difficulty.

Plans for another rig of the same type to be used for expeditions are in the works. It would be interesting to see what can be done at greater ranges, which I know are done commercially. It's quite a thrill to hear full quieting on top of a hill with a lot of old junk plumbed together. I hope you will enjoy the same results on your own expeditions. ■

References

Hewlett-Packard Application Notes #920 and #928

Step Recovery Diode, HP 5082-0830

Microwave Associates Snap Varactor, MA 43004

Faces, Places

In recognition of her outstanding support of radio amateurs in their state, Alabama hams presented this plaque to Mrs. Edith M. Parker at the Central Alabama Hamfest in September. Mrs. Parker was in charge of issuing amateur radio car tags from 1962 until her retirement in July of this year.

At the Veteran Wireless Operators Association's annual banquet in New York on May 20, Jack R. Popple (left) presented the Marconi Memorial Gold Medal to Bob "Whitey" Doherty K1VV for his efforts in conjunction with the Marconi 75th Anniversary Amateur Radio Commemorative Station, KM1CC.

T. S. Ganesh VU2TS (left) and his seventeen-year-old SWL nephew, Janardhan, competed in August's 1000-mile Karnataka-1000 Motor Rally, organized by the Bangalore (India) Motor Sports Club. What you can't see in this view is the sign painted on the bike's seat: "73 FROM RADIO AMATEURS."

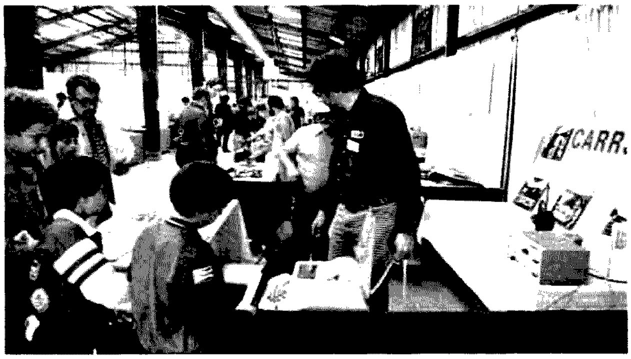

Craig McCartney WA8DRZ/9 was one of the Chicago Area Radioteletype Repeater System's members who manned the booth at the Chicago FM Club's annual Radio Expo this past fall.

These central Ohio amateurs helped raise over two thousand dollars for charity last spring, when they assisted with the fourth annual Reynoldsburg bike-a-thon. Pictured left to right are Dr. B. Morgan Heflin WA8UVR, Randy Mitchell WD8AXY, Vernon Holland WD8NAU, Joe Hahn WD8NBA, Malt Brown WB8WKZ, Dick Carr WA4BIH, Dennie Roe WA8HPW, John Vollmer WB8UIF, and Mac Ceschiat K8ZQS.

CONTESTS

from page 28

continents = 5 points. Contacts with HQ station GW8WJ or GW6AQ count 25 points. Total score is total number of QSO points times number of prefixes worked (as per WPX award rules).

ENTRIES:

Send logs not later than Jan. 31 to: Peter Lumb G3IRM, 14 Linton Gardens, Bury Saint Edmunds, Suffolk IP33 2DZ, United Kingdom. IRCs appreciated for contest results.

CONNECTICUT QSO PARTY

Starts: 2000 GMT Saturday, December 2
Ends: 0200 GMT Monday, December 4
Rest Period: 0500 to 1200 GMT December 3

The Candlewood ARA invites all amateurs to participate in the annual CT QSO party. Phone and CW are considered to be the same contest. Stations may be worked once on each band and mode, including OSCAR as a separate mode. Novices will please identify themselves by "/N" unless "N" is part of their call. Out-of-state portables and mobiles operating in CT are requested to identify themselves as such. CT mobiles operating in other than their home counties will receive special certificates provided they make at least 20 out-of-state QSOs. Mobiles count as a separate station in each county. Counties certificates will be awarded to each station working all 8 CT counties.

EXCHANGE:

QSO number, RS(T), and ARRL section or CT county.

FREQUENCIES:

SSB—3927, 7250, 14295, 21370, 28540.

CW—40 kHz up from bottom of each band.

Novices—3725, 7125, 21125, 28125.

SCORING:

Non-CT stations multiply total number of CT QSO points by number of CT counties worked (8 max.). CT stations multiply total number of QSO points by number of ARRL sections and provinces. Additional DX contacts count for QSO points, but only one DX multiplier is allowed overall. W1QI, the club station, will be operating CW on odd hours and SSB on even hours, and counts as 5 points on each band and mode. Novice QSOs count 2 points while OSCAR QSOs count 3 points each.

ENTRIES:

Logs must show category, date, time (GMT), calls, numbers, mode, bands, QSO points, and claimed scores. Separate certificates for single and multi-operator stations, and all logs should show which class applies. Enclose a large SASE for results. Send logs, postmarked by Jan. 3, to CARA, c/o Fred Porter W1VH, 169 Carmen Hill Rd. #2, New Milford CT 06776.

FLATLAND FARMER 10-X QSO PARTY

Starts: 1200 GMT Sunday, December 3
Ends: 2400 GMT Sunday, December 3

This is the first DX QSO party sponsored by an individual chapter of the 10-X International Net, Inc., the Flatland Farmer Chapter. Score one point per QSO if said station does not have a Flatland Farmer certificate, two points if they hold a Local or Associate certificate number (station will have an "L" or "A" after the certificate number). All first state or first DX certificate holders will be worth 2 points for a QSO. If the station is a Charter member certificate holder, score 3 points per QSO.

SPECIAL:

On this date and this date only, any station who does not hold a Flatland Farmer certificate can qualify for one by having two QSOs with any two stations who have a Flatland Farmer certificate, regardless of whether that station is a Charter, Local, or Associate member. Stations wishing to obtain their basic certificate should send request, listing the two QSOs, $1.00, and two first class stamps to: Lou Reik WB9YJE, 804 Commercial Street, Danville IL 61832.

ENTRIES:

Logs must have date, call letters, name, QTH, 10-10 number, and Flatland Farmer number, if any. Logs to be postmarked by Jan. 15 and mailed to: Mike Reik WB9YJF, 304 McKinley Street, Westvilie IL 61883. Results of the contest will be published in the spring 10 = 10 bulletin, and other amateur publications.

AWARDS:

A certificate will be issued to the 1st, 2nd, and 3rd place winners in each US call area, including KH6 and KL7. All other call areas will be considered DX and a certificate will be issued for 1st, 2nd, and 3rd place. In addition, a special award will be given to the person anywhere in the world who scores the highest point total.

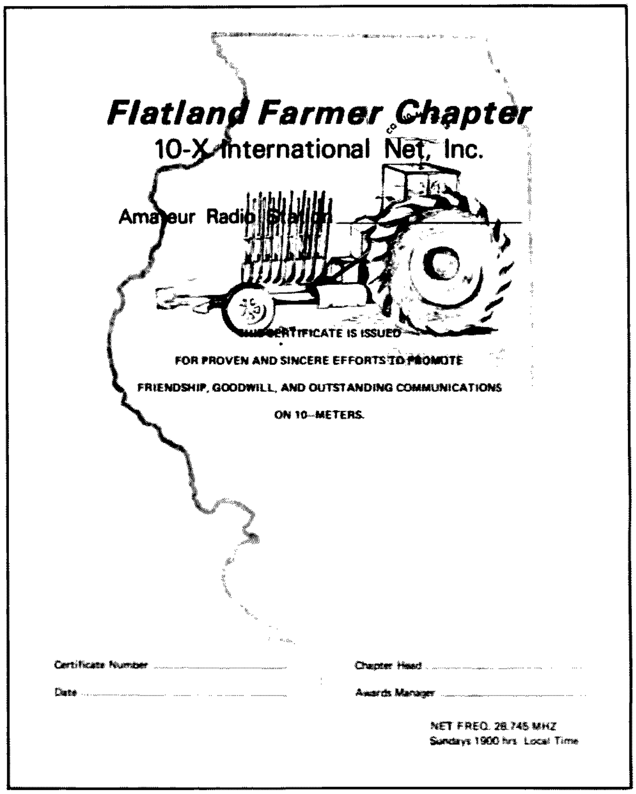

RESULTS

RESULTS OF 10-10 SUMMER QSO PARTY JULY 15-16, 1978

TOP TEN

K0GU	1317/2358
K8LT	805/1481
W0PEL	781/1433
TI2NA	771/1356
WA5JDU	687/1272
W0CP	649/1215
W4ORH	648/1186
N0CP	613/1137
WD5CSK	583/1104
K5CWB	582/1089

CHAPTER STANDINGS

1.	Colorado	11081/20704
2.	Minute Man	5629/10721
3.	Bay Area	3839/7201
4.	Land O' Lincoln	2934/5455
5.	Gateway	2740/5326
6.	City of Lights	2447/4607
7.	Plainsman	2202/4196
8.	North Star	2164/4125
9.	Sky Blue Waters	2115/4060
10.	White House	2081/3940

U.S. DISTRICT LEADERS

1.	WA1UZH	505/953
2.	K2DEG	407/751
3.	WB3FAF	418/769
4.	W4ORH	648/1186
5.	WA5JDU	687/1272
6.	WB6JPY	444/804
7.	K7PVZ	470/833
8.	WD8DPB	236/446
9.	WA9PQY	464/850
0	K0GU	1317/2358
KG	KH6ITD/KG6	107/144
KH	KH6JTL	389/693
KA	KA6HF	90/132

DX LEADERS

Central America & Caribbean	TI2NA	771/1356
South America	LU6DWZ	231/418
Europe	DF1XG	124/140
Asia	JA3XOG	61/105
New Zealand	ZL1BQD	260/440
Australia	VK2NET	383/661

CANADIAN LEADERS

VE1	VE1BNN	508/910
VE2	VE2DZO	324/603
VE3	VE3JAR	271/519
VE4	VE4ADG	219/414
VE6	VE6BBC	54/102
VE7	VE7CMT	255/459

There will be no multipliers used or consideration given for multi-operators.

The normal requirements for the award are a total of 10 points as follows: Charter members (#01C-24C) = 5 points; Local members (#101L-500L) = 2 points; Associate members (#501A and up) = 1 point. Submit your request with $1.00 and two first class stamps to the certificate manager, Lou Reik WB9YJE (see above for address).

SODBUSTER AWARD

The Sodbuster Award is the newest award. It is a 3- x 2½-inch self-sticking award that is to be placed on your basic certificate. This award requires 50 points. This award in itself will be worth 3 points. The point breakdown for the Sodbuster Award is as follows: Charter members are worth 5 points; Local members are worth 3 points; first staters and first DX are worth 2 points; all other Associate members are worth 1 point. Submit your request along with 3 first class stamps to the certificate manager, Lou Reik WB9YJE.

For those interested in the Flatland Farmer Chapter, it meets each Sunday night at 1900 hours local IL time on 28.745 MHz.

ARRL 10 METER CONTEST

Starts: 1200 GMT
Saturday, December 9
Ends: 2359 GMT
Sunday, December 10

The contest is open to all amateurs worldwide. All QSOs must take place on 10 meters, and OSCAR QSOs are valid. Each station can be worked on phone-to-phone and CW-to-CW, and anyone can work anyone. All CW contacts must be made between 28.0 and 28.5 MHz, unless working through OSCAR. When operating on 10 meters, please avoid the OSCAR downlink frequencies.

CLASSES:

Entries will be classified as either single- or multiple-operator stations. Multiple-transmitter stations are not allowed.

EXCHANGE:

All W/VE stations will send RS(T) and state or province. Others will send RS(T) and consecutive serial number starting with 001. Stations that are not land-based will send RS(T) and ITU Region (1, 2 or 3). The District of Columbia is counted as part of Maryland.

SCORING:

Each completed QSO counts 2 points, or 4 points if with a W or K Novice. The multiplier is the sum of the total number of states, Canadian call areas (max. 9), ARRL countries (not US or Canada), and ITU regions from non-land-based stations. Final score is the sum of the QSO points times the total multiplier.

AWARDS:

A certificate will be awarded to the highest-scoring single-operator station in each section, Canadian call area, and foreign country. Region awards for non-land-based stations and awards for multi-operator and Novice stations will be issued if warranted.

FORMS:

It is suggested that contest forms be obtained before the contest from the ARRL, 225 Main St., Newington CT 06111; include an SASE. Checksheets are not required, but a penalty of 3 additional contacts will be made for each duplicate contact.

These rules were taken from last year's contest. For complete rules, see the November issue of QST.

1978 CW CHRISTMAS PARTY

The Society of Wireless Pioneers (SOWP) is planning a membership Christmas on-the-air CW QSO Party for the weekend of December 16 and 17, 1978. The party will cover the full GMT period to allow members around the world to participate.

All members with amateur licenses are being encouraged to take part. The call will be CQ SOWP. While there will be no certificates or other awards given—everyone who takes part will be a winner by having an opportunity to renew old friendships, establish new ones, and continue a camaraderie developed over the years.

Suggested frequencies for the party are between 50 and 60 kHz up from the low end of each amateur band. Novices should consider the middle of each Novice band. Additional information about this party and the Society can be obtained from the Party Coordinator, Bill Willmot K4TF, 1630 Venus Street, Merritt Island FL 32952.

ARRL STRAIGHT KEY NIGHT

0100-0700 GMT
Monday, January 1

Check *QST* for any changes in the rules!

Basically, rules require the use of a straight key only. Send "SKN" instead of "RST" during QSOs, to help identify contest stations. On 80-40-20 meters, try 060 to 080 kHz up from the bottom edge of the band. On Novice bands, try 10 kHz up from the bottom of the Novice band. After the contest period, send a list of calls of the stations contacted during the contest period, plus your vote for the best fist heard. Please mail entries as soon as possible to the ARRL, 225 Main Street, Newington CT 06111.

THE 73 MAGAZINE 10 METER AWARDS

The return of vigorous solar activity means that 10 meters is once again a band to be reckoned with. Ol' Sol's 11-year cycle of sunspot production is about to hit a peak, with the result that QRP 10 meter DX is possible.

Now's the perfect time to convert that old CB rig to 10 (or buy a brand new one from Bristol or Standard) and join the fun. We've had many articles showing you just how easy a CB-to-10 conversion really is. To give you an added incentive, 73 is offering two nifty Certificates of Achievement for 10 meter channelized communications.

For domestic types, there is the 10-40 Award. This one should be pretty easy—just work 40 of the 50 states. The DX Decade Award goes to DXers who work 10 or more foreign countries with a channelized 10 meter rig. We have endorsement stickers, too—the whole bit.

To give everyone an equal shot at award #1, only contacts made October 1, 1978, or after will be valid.

Well, don't just sit there. Get out your soldering iron, order some crystals, and put that CB rig on 10. This is going to be fun, so don't miss out!

RULES

1) All contacts must be made in the 10 meter amateur band using channelized AM equipment. Both converted Citizens Band equipment and commercially-produced units (such as those available from Bristol Electronics and Standard Communications) may be used.

2) To be eligible for award credit, all contacts must be made October 1, 1978, or after.

3) The 10-40 Award is available to applicants showing proof of contact with stations in at least 40 of the 50 United States. A special endorsement sticker will be available to those working all 50 states.

4) The DX Decade Award is available to applicants showing proof of contact with at least 10 foreign countries. Endorsement stickers will be awarded for 25, 50, 75, and 100 countries.

5) A log of stations worked, with the date, time, and type of equipment used for each contact, must be submitted when applying for each award or endorsement.

6) Each application for an award or endorsement must be accompanied by a signed statement that all claimed contacts are valid. No QSL cards need be sent, but they must be in the possession of the applicant.

7) To cover costs, a fee of $5.00 must accompany each application for the 10-40 or DX Decade Award. The fee for endorsement stickers will be $2.00 each.

8) All award applications should be mailed to: Chuck Stuart N5KC, 5115 Menefee Drive, Dallas TX 75227.

SLOW SCAN TELEVISION NEWS

Amateur Television Magazine is now offering a series of award certificates for SSTV activity ranging from a basic award through several levels of difficulty to a Master Scanner Award. The beginning level certificate requires the SSTV operator to have confirmed five SSTV contacts on each of any five ham bands, a total of 25 contacts. The bands used for all the levels may be any combination of the contestant's choosing. Additional awards are available for working increasing numbers of stations on increasing numbers of bands. Each certificate is 8 x 11 inches and suitable for framing. *ATV Magazine* will publish the names and calls of each certificate holder as issued with each award numbered consecutively. The various award levels are as follows: 5 SSTV QSOs on each of any 5 bands = 25 contacts total; 6 SSTV QSOs on each of any 6 bands = 36 contacts total; 7 SSTV QSOs on each of any 7 bands = 49 contacts total; 8 SSTV QSOs on each of any 8 bands = 64 contacts total; 9 SSTV QSOs on each of any 9 bands = 81 contacts total; 10 SSTV QSOs on each of any 10 bands = 100 contacts total.

In addition to the normal frequency bands, the use of OSCAR may be used as 2 bands for any two OSCAR modes, i.e., 5 contacts via 450/144 OSCAR would count as 1 band for the basic certificate.

Applicants should send proof of QSOs and $1.00 for postage for each award to: SSTV Master Scanners Awards, PO Box 1347, Bloomington IN 47401. Allow two weeks for processing and award preparation. SSTV contacts must have been made after Sept. 1, 1978, to qualify!

DX

from page 20

W4KPQ daily on 14210 at 1200Z. QSL to K4MQG.

South Shetlands—CE9AT
CE9AT meets WA2HNE daily on 21335 at 1600Z. Tune in about a half hour earlier to get your call on the list. US, VE, and XE stations can QSL to CE2BIO, Antarctic Department, Naval Post Office, Valparaiso, Chile. Include an SASE with 15¢ USA postage.

Svalbard—JW7FD
Rag has been showing in the 14200 to 14250 slot on twenty meters after 1000Z. Between 1700 and 1800Z he moves to fifteen meters, sometimes visiting the Africana Net on 21355. QSL to LA5NM.

Tonga—A35CR
Clark plans to be in Tonga for about a year as a member of the Peace Corps. Look for him around 14240 most days after 0700. QSL to Box 147, Nuku' Alofa, Tonga.

Walvis Bay
The Northern California DX Foundation has indicated a willingness to supply a beam and equipment for an operation if it can be assured that it will be a duly licensed operation, there being some doubt whether one of the previously heard stations did have a valid Walvis Bay license. South Africa continues to insist that Walvis Bay is their territory and has been for over 100 years. Namibia, on the other hand, has only been administered since its capture from the Germans during World War I. This will ali be worked out eventually, so work them if you hear them and worry later.

Rhodes—SV0
SV0WTT has been trying to get permission from the Greek licensing authorities for an operation from Rhodes Island in the Dodecanese group. While the US has a reciprocal licensing agreement with Greece, it is still difficult to get permission to operate from Rhodes and just about impossible to get permission to operate from Mount Athos. In the meantime, Jack can usually be found around 7003 from 2230 and 21003 after 0300Z. Give him a call and you'll get the latest word on Rhodes.

United Arab Emirates—A6XB
A month or so back, we reported that all A6 operations had ceased. Apparently this is not completely true. Vernon Dameron K1DRN, QSL manager for A6XB for the past seven years, says that from the QSL cards he is receiving for A6XB, there is still plenty of activity. CW operation is completely forbidden though, so any A6s you hear on CW are phony.

Brunei—VS5XU
Look for this one from 1300Z daily in the 14200 to 14210 slot. A good operator, he stays away from lists and generally works by call districts. QSL via DL1DL.

East Malaysia—9M8HG
CW contacts can be made with this rare one near 14003 around 1300Z and near 21025 after 1500Z. QSL to Horace Cray, PO Box 2242, Kuching, Sarawak, East Malaysia.

Iraq—YI1BGD
Magid seems to have settled into a regular routine operating transceive on 14310 after 2100Z. Although handicapped by a weak antenna and low power, he continues to do a terrific job and show a lot of patience, seldom losing his cool. At the end of each Friday session, a list is taken by districts for the following week's session. QSL to Box 5864, Baghdad, Iraq.

Lord Howe Island—VK2AGT
Dick can usually be found around 14225 from 0600 to 0700Z, especially on Wednesdays. He is looking for Nebraska, Utah, and Wyoming to fill out his WAS. QSL to Dick Hoffman, Lord Howe Island, N.S.W. 2829, Australia.

Mongolia—JT1BF
On almost daily from 1100 to 1400Z. UW0NE is the list-taker and MC. QSL to PO Box 6, Vladivostok, USSR.

BITS AND PIECES

The Johnson Island Radio Club has received a number of cards for contacts with KJ6DL, operator Henry, during the period July 18 to August 1. KJ6BZ reports that this station is unknown and cards are being returned.

A show of hands at the DX Forum at DXPO 78 showed that 98% fo those present favored making the DXCC awards pure by disallowing any cross-mode contacts. A majority also favored dropping the "separate administration" clause from the DXCC country criteria. This is the clause that gave us 4U1ITU/4U1UN and Sable Island.

There are three different groups from as many countries planning future Bovet action.

The TF6M operation garnered 10,800 QSOs in 85 hours. They worked 121 countries on five continents, including all states but Hawaii.

Some new prefixes have been announced. These include J4 for Greece and J3 for Guinea Bissau.

Congratulations to W5OPC, WA5KGQ, and WB5OJO for providing a vital communications link to the *Double Eagle II* during the first-ever transoceanic balloon crossing. Amateur radio proved to be the only method of communications when a faulty transmission cable aboard the balloon knocked out the commercial frequency equipment. A special QSL will be sent to all those lucky enough to make contact.

By the time you read this, the new beam supplied by the Northern California DX Foundation should be up and in operation at 4U1UN.

As of the end of July, total licensed amateurs in the United States numbered 348,561, up 8.5% in the last year.

Jacky F6BBJ, one of the top French DXers, has been looking toward the Red Sea and the islands off East Africa for some possible DXpedition action around the end of the year. Other Frenchmen closer to home have been eyeing St. Barthelemy Island north of Guadeloupe for possible DXpedition action if DXCC approval can be obtained.

Volunteer examiners are needed by the FCC to administer amateur examinations to blind and physically handicapped applicants. Contact your local FCC office for more information.

Rules and application blanks for the World Radio W-100-N, Worked 100 Nations Award, can be obtained by sending an SASE to World Radio, 2120 28th Street, Sacramento CA 95818.

The DXAC recently vetoed DXCC status for the Republic of Sealand. The Republic of Sealand is an old British airdefense radar tower similar to a drilling tower, located just off the English coast. It was purchased by a group hoping to turn it into a gambling casino. They issued passports, minted stamps, and even had their own currency. Apparently it was a good idea because another group invaded Sealand and captured it by force. The original group then rearmed and recaptured Sealand and imprisoned the invaders' leader. After all this, the DXAC still said no.

Bill A35WL will be returning to New Zealand soon, but while on Tonga, he has been conducting radio classes. Hopefully, one of the graduates will remove A35 from your needed list.

Last month, we mentioned the possibility of a future DXpedition to Oneo Island in the South Pacific. For those of you trying to find it on your map, look northwest of Pitcairn and west of Henderson Island.

There is a report that Iraq and Saudi Arabia have signed an agreement concerning their neutral zone, so if you haven't worked 8Z4, now is the time.

FG7AS does QSL—sometimes a year late, but he does QSL. On that same subject, there is a report out of Moscow that the USSR QSL Bureau is running out of funds and must cut back on their manpower. This will mean an even longer wait for those needed Russian QSLs.

HH2MC advises that there are now 17 members in the Port-au-prince Radio Club. Haiti has applied for IARU membership and is waiting for action to be taken on its application.

Baruch 4Z4TT plans to head back into the Pacific before next summer. VR1 is a possible stop. Let him know if you have any favorites.

Congratulations to K1DG on winning the 1978 Bermuda DX Contest and the all-expense-paid trip to Bermuda that goes to the winner. K3DH was the top scorer in the third call district for the 5th straight year.

Alex 3B8DA reports making better than 10,000 contacts from 3B9 and some 5,000 from 3B6.

The September issue of *National Geographic* had an article on JA1QFW's solo walk to the North Pole.

KM6FC left Midway Island last October and headed for Maine. Len logged better than 23,000 QSOs during his stay. Two operators remain at KM6BI. KM6BI contacts before July, 1978, go to W8TIZ; afterwards, to W5RU at the Delta DX Association.

It is reported that the VU Bureau has gone bankrupt and folded operations. It might be prudent to seek a direct QSL route for VU contacts.

It seems there will be no ZS6QU/ZS3 QSLs forthcoming. ZS6QU first reported that an office girl had accidentally dumped the incoming QSLs into the wastebasket. Those who tried again received only silence for their efforts.

Jack K9OTB has ceased QSL operations for FP8DX/FP8ML and FP8HL. He will still help you for contacts with FP8DX/FP8ML and his own call,

FP0YY.

VU2ANI became a silent key in 1976 and several are searching for his logs. K6TWT doesn't have them.

W0BW is trying to get confirmation on contacts with CR6OB in November, 1975, and D2ACK in July, 1976. Any assistance would be appreciated.

NOVICE CORNER

Last month, we talked about the incoming QSL bureaus and how to make sure you received any QSL cards directed to you via that route. This month, we will discuss the best way to send QSLs. Whether you QSL direct, via the bureau, or through a QSL manager, you'll want to be able to pick the best route for that particular card. Best route in this case means the one that is the most likely to produce a card in return, not necessarily the cheapest or even the fastest. Remember, confirming the contact is the result we are after.

QSL managers are almost always the best route to go. If the station you work has a QSL manager, then you can usually be assured of a fast confirmation. Sometimes problems develop like logs getting lost or an inexperienced QSL manager not realizing the scope of the task he has undertaken, but generally QSLing via a QSL manager will produce the fastest results. Here is the way it works: After looking up the QSL manager's address, fill out a QSL in the normal manner, but make sure that your call is written on the report side of the card. QSL managers don't like to have to stop and flip a card over to see who sent it. That can be very time-consuming. Next comes the SASE. SASE stands for self-addressed stamped envelope and that's exactly what it is. Address the envelope in the normal manner, except address it to yourself and don't forget to stamp it. Now, when the QSL manager fills out your card, he just drops it into the SASE, seals it, and mails it back to you. Some QSL managers like to have the call of the DX station and the date and time of the contact written in the lower left-hand corner of the envelope. This helps them to file your envelope until the logs arrive from the DX station. If the QSL manager is located outside the United States, skip the postage stamp and drop a one dollar bill in the envelope. There are other ways, such as using IRCs or foreign postage, but a dollar bill generally produces the best results.

If no QSL manager exists for a particular station, then the next best route is direct to the station's home QTH. If the station accepts direct QSLs, he will usually pass you his address during the contact. This is generally a PO box number, so it is no problem to pass. Since the DX station receives many QSL requests, he will usually return your QSL via the bureau unless you enclose an SAE along with the usual dollar bill. Again, IRCs or foreign mint stamps can be used, but the dollar bill produces the best results. IRCs, which can be purchased at your local post office, are too expensive and are not always accepted in some countries. One thing can be said for foreign mint stamps. Once you stick them on your SAE, they are useless to the DX station for any purpose other than to return your card. One thing must be kept in mind when considering direct QSLing. If the DX station says to QSL via the bureau or via his QSL manager, there may be a reason that he doesn't want cards sent directly to him. In some countries, the ownership and use of a radio transmitter can cause problems with the local authorities. Receiving mail addressed to an amateur radio station from all over the world would be a dead giveaway. It's always best to follow the QSL instructions given by the DX station. They will usually produce the best results.

The slowest, but by far the least expensive, method of QSLing is via the bureau. In many cases, such as the Iron Curtain and Soviet countries, QSLing via the bureau is the only way. The best way to QSL via the bureau, especially if you have many cards going to several different countries, is to ship them all in one bundle to one of the outgoing QSL bureaus.

If you belong to the ARRL, you can send your cards along with one dollar and the label from your last issue of *QST* to the ARRL Outgoing QSL Bureau. A shortcoming of the ARRL bureau is the fact that they will only forward QSLs to countries which have an incoming QSL bureau. Many countries have only a few hams and do not support a QSL bureau. In fact, of the 319 "countries" currently recognized for DXCC contacts, the ARRL Outgoing QSL Bureau will forward cards to only about 160. Fortunately, there are several good commercial QSL forwarding services that will forward your cards anywhere for about 5¢ per card. W3KT is one. There are several others.

In summation, of the three QSLing methods we have discussed, the QSL manager is almost always the best route, followed by direct QSLing, and then the bureau. In all cases, it is best to follow the QSL instructions given by the DX station himself. Good luck.

QSL INFORMATION

A6XP—see text
FK8AH—Robert Garbe, Aviation Civile, La Tontouta, New Caledonia
FP8DH—K9OTB
FP8YY—K9OTB
H5AW—ZS6AW
HZ1BS/8Z4—OE6EEG
J20BL—F6BFN
KJ6DL—see text
KM6BI—see text
OJ0MA—OH0NA
PW0PP/PY0RO—W1DA
ST2HF—G4GFI
TJ2P—see text
VGW-211—see text
VK9ZR—VK2BJL
ZD7WT—W3KT or via SARL
3B6DA/3B9DA—3B8DA
3B8YY—K5YY/K5QHS
3B9ZZ—K4YT
5N2NAS—see text

Thanks to the *West Coast DX Bulletin*, Long Island DX Association, and *World Radio Magazine* for much of the preceding information.

Ham Help

I need a manual and/or schematic for the Multiphase Exciter Model 20-A made by Central Electronics, Inc., during the 1950s. I will copy, and return in good condition.

A. McGinnis WA2DTQ
55 Patton St.
Iselin NJ 08830

I am indeed very, very sorry that I waited this long to thank you for publishing my letter in the August issue.

It seems that when it rains, it pours. (I hate to use an old saying.) In August, I suddenly found that I had some friends, for I suddenly received a few letters and coils, and being partially blind, it took about 2 weeks to discover that my letter was in the magazine, and then to find it. In addition to this, I was studying to get my Novice ticket, and I can announce that on September 1, 1978, I became WD0???

Anyway, I'm also busy setting up my shack and figuring out the best way to put up my antenna, and it is creating some problems. Somehow I'll be able to be on the air when my license arrives. However, whenever I get some time, I've been slowly trying to get my telephone together, and with luck, I should have it working soon.

So, again I want to thank you, and all the other people who have been so kind to me, and have done so much to help me. So, thank you, and I'll hear you all on the air shortly.

Ron Peterson WD0???
Route 1, Box 151
Clear Lake MN 55319

I would be interested in talking to anyone who has developed a simple, chirp-free CW keying circuit for the Kenwood TR-7400A so that the transceiver can be used for 2 meter OSCAR work.

John Mollan WA7ATU
7805 NE 147th Ave.
Vancouver WA 98662

STATEMENT OF OWNERSHIP, MANAGEMENT AND CIRCULATION (Required by 39 U.S.C. 3685). 1. Title of publication, 73 Magazine. 2. Date of filing, Oct. 1, 1978. 3. Frequency of issue, Monthly. A. No. of issues published annually, 12. B. Annual subscription price, $15. 4. Location of known office of publication (Street, City, County, State and ZIP Code) (Not printers), Pine Street, Peterborough, Hillsboro County, N.H. 03458. 5. Location of the headquarters or general business offices of the publishers (Not printers), Pine Street, Peterborough, Hillsboro County, N.H. 03458. 6. Names and complete addresses of publisher, editor and managing editor. Publisher (Name and Address), Wayne Green, Peterborough, N.H. 03458. Editor (Name and Address), Wayne Green, Peterborough, N.H. 03458. Managing Editor (Name and Address), John Burnett, Peterborough, N.H. 03458. 7. Owner (If owned by a corporation, its name and address must be stated and also immediately thereunder the names and addresses of stockholders owning or holding 1 percent or more of total amount of stock. If not owned by a corporation, the names and addresses of the individual owners must be given. If owned by a partnership or other unincorporated firm, its name and address, as well as that of each individual must be given.) Name, 73 Inc., Peterborough, N.H. 03458. Wayne Green, Peterborough, N.H. 03458. 8. Known bondholders, mortgagees, and other security holders owning or holding 1 percent or more of total amount of bonds, mortgagees or other securities (If there are none, so state) Name, none. 9. For completion by nonprofit organizations authorized to mail at special rates (Section 132.122, PSM). The purpose, function, and nonprofit status of this organization and the exempt status for Federal income tax purposes (Check one) Not applicable. 10. Extent and nature of circulation. (X) Average No. copies each issue during preceding 12 months. (Y) Actual No. copies of single issue published nearest to filing date. A. Total No. copies printed (Net Press Run) (X) 77,550 (Y) 80,000. B. Paid circulation 1. Sales through dealers and carriers, street vendors and counter sales (X) 13,590 (Y) 14,585. 2. Mail subscriptions (X) 56,290 (Y) 58,547. C. Total paid circulation (Sum of 10B1 and 10B2) (X) 69,880 (Y) 73,132. D. Free distribution by mail, carrier or other means samples, complimentary, and other free copies (X) 740 (Y) 820. E. Total distribution (Sum of C and D) (X) 70,620 (Y) 73,952 F. Copies not distributed 1. Office use, left over, unaccounted, spoiled after printing (X) 5,840 (Y) 6,048. 2. Return from news agents (X) 1,090 (Y) None. G. Total (Sum of E, F1 and 2—should equal net press run shown in A) (X) 77,550 (Y) 80,000 11. I certify that the statements made by me above are correct and complete. Signature and title of editor, publisher, business manager, or owner. Robert R LaPointe, Business Manager

Ham Help

I would like to provide a little feedback in regard to my request (May, 1978) for information on the 8326 tube and the Hallicrafters SR500. I found out that 8326s are available from CeCo for $22 each. They are rated at 50-Watt plate dissipation. A direct replacement is the 6DQ5; however, it has only a 24-Watt plate dissipation, so be real careful on tune-ups. The 6146B was not recommended as a replacement. I got 28 replies plus one phone call on that one. My second request was about a K-W crystal and I got 11 replies telling me that K-W Manufacturing, PO Box 508, Prague OK 74864, made the crystal. When I sent them the bad crystal, they sent me a new one at no charge! Ham Help really works! Thanks.

Marvin Moss W4UXJ
Atlanta GA

I've got the kind of problem that will require the help of real hams. I have only held my Novice license a short time, and, so far, I have only been able to acquire a few books, magazine articles, etc. I have not yet been able to meet any of the local hams, and my personal knowledge level and technical resources are still very limited. But, nevertheless, I am determined to help a friend who is blind enter the exciting world of ham radio.

I would very much appreciate hearing from anyone who may have ideas or information on operating aids, and any advice at all on methods or procedures of teaching the blind. Thank you.

Jack Beckwith WB7VBC
624 W. Linden
Caldwell ID 83605

I am writing in the hope that someone might be able to give me some advice or possibly direct me to someone that might be of assistance. My wife and I are going to Cayman Brac, Cayman Islands, in January. The purpose of the trip is a diving vacation with underwater photography. Anyway, the other night I got the bright idea to take along a radio. A day or two later, I sent off a request for a license. Now comes the problem — weight? We are allowed a mere 47 lbs. With diving and photography equipment I'm afraid the toothbrush will have to be a lightweight one! Does anyone know of an operation on Brac ? Or, can anyone come up with a solution . . . short of not taking my wife's diving equipment. Thanks for the help.

John Aubrey W5EO
1113 N. 58th Terr.
Fort Smith AR 72904

I am building a receiver, and I need a subminiature audio transformer, such as those found in small transistor radios, with a 10,000-Ohm primary and a 1,000-Ohm secondary. Also, I must obtain a special item from a store in Regina, Saskatchewan. I would greatly appreciate hearing from any Canadian ham who could be of assistance in obtaining it.

Paul Hoegstrom WD8OTW
5962 S. Park Blvd.
Parma OH 44134

I need information to convert a Motorola MICOR T53RTN1190A to ham and/or MARS 2 meter frequencies. I also need data on the SC-946 handset. Thanks.

Frank Nollette KA0AOJ
5228 Clark
Richards-Gebaur AFB MO
64030

I need a schematic diagram and service manuals for an Icom DV-21 digital vfo, a National HFS receiver, an Amplidyne Labs model C14 220-MHz converter, and a Centimeg 432-MHz converter.

Jung Y. Lem KB6BO
5222 Coringa Dr.
Los Angeles CA 90042

I need help. I bought a Mostek integrated tone receiver chip, #MK5102(n)-5, but I can't get it to do anything but look back at me from my table. I need help specifically for the input and output circuits.

Norman E. Rosenspan
64 Berry Avenue
Staten Island NY 10312

✓ Reader Service—see page 323.

Social Events

HAZEL PARK MI
DEC 3

The Hazel Park Amateur Radio Club will hold its 13th annual Swap & Shop on Sunday, December 3, 1978, from 9:00 am to 3:00 pm, at Hazel Park High School, Hazel Park, Michigan. Prizes include a TS-520S, HW-2036A with Micoder™, and a Bird Model 43 wattmeter with element. Admission is $1.00. There will be food, door prizes, and free parking. Reserved table space is 75¢ per foot. Talk-in on 146.52. For details, send an SASE to Robert Numerick WB8ZPN, 23737 Couzens, Hazel Park MI 48030.

SOUTH BEND IN
JAN 7

The Repeater Valley Hamfest Swap & Shop will be held on Sunday, January 7, 1979, at the New Century Center on US 31 in South Bend, Indiana. This event will be held indoors with food service available. An automobile museum and art center are in the same building. Tables are $3.00. Talk-in on 146.13/.73, .34/.94, and .52/.52; 147.99/.39, .93/.33, .84/.24, and .69/.09. For information, contact Wayne Werts K9IXU, 1889 Riverside Drive, South Bend IN 46616; (219)-233-5307.

RICHMOND VA
JAN 14

The Richmond Amateur Telecommunications Society will hold its Frostfest-II on January 14, 1979, at the Bon Air Community Center in Richmond, Virginia. Talk-in on .28/.88, .34/.94, and .52. There will be a technical symposium, a drawing, and a home-brewers' contest with two divisions, over 18 and under. FCC exams will be administered starting at 10:00 am. To take the exam, mail Form 610 at least five days prior to the Fest to the address below. Commercial exhibitors are by invitation only. There will be an indoor flea market with one table for $2.50 and outdoor tailgate space for $1.00. Admission is $2.50. For information, contact the Richmond Amateur Telecommunications Society, PO Box 1070, Richmond VA 23208.

SOUTHFIELD MI
JAN 21

The Southfield High School Amateur Radio Club will hold its 14th annual Swap & Shop on Sunday, January 21, 1979, at Southfield High School, Southfield, Michigan, at 10 Mile and Lasher. Admission is $2.00. For information, send an SASE to Robert Younkers, 24675 Lasher Rd., Southfield MI 48034, or call (313)-354-8210.

MIAMI FL
JAN 27-28

The Dade Radio Club presents the 19th annual Tropical Hamboree and ARRL South Florida Convention on January 27-28, 1979, in Miami, Florida. Over one hundred exhibitor booths, a giant flea market, and several technical and group sessions will operate simultaneously in completely separate areas of the Flagler Dog Track Auditorium building. With the Convention immediately following the Miami Board Meeting, most Division Directors and HQ officials will be present for the ARRL general session. Extensive free parking, including overnight space for RVs, is available on the grounds. Preregistration is $3.00; $4.00 at the door. For up-to-date information, booth space, flea market table space, RV parking space reservations, and hotel rates, write DRC Hamboree, PO Box 350045, Riverside, Miami FL 33135.

MANSFIELD OH
FEB 11

The Mansfield midwinter hamfest/auction will be held on February 11, 1979, in a heated building at the Richland County Fairgrounds in Mansfield, Ohio. There will be prizes and a flea market. Doors will open to the public at 8:00 am. Talk-in on 146.34/.94. Advance tickets are $1.50; $2.00 at the door. For information, contact Harry Frietchen K8HF, 120 Homewood, Mansfield OH 44906, or phone (419)-529-2801 or (419)-524-1441.

LANCASTER PA
FEB 18

The 7th annual Lancaster hamfest will be held on Sunday, February 18, 1979, at the Guernsey Sales Pavilion, US Rt. 30 & PA Rt. 896, Lancaster, Pennsylvania. Doors will open at 8:00 am and there will be a prize drawing at 2:00 pm. Admission is $3.00, and table reservations are $2.00 in advance. There is a new, larger indoor flea market area. Food and soft drinks will be available. Talk-in on 146.01/.61. For further information, contact SERCOM, PO Box 6082, Rohrerstown PA 17603.

DAVENPORT IA
FEB 25

The Davenport Radio Amateur Club will hold its hamfest on February 25, 1979, at the Masonic Temple in Davenport, Iowa. Admission is $2.00 in advance, $2.50 at the door. Refreshments and tables will be available. Talk-in on .28/.88 and .52. For further information, send an SASE to John S. Birmingham WBØQCC, 2022 Brown Street, Davenport IA 52804.

LIVONIA MI
FEB 25

The Livonia Amateur Radio Club would like to announce that the 9th annual LARC Swap 'n Shop will be held on Sunday, February 25, 1979, from 8:00 am to 4:00 pm, at the new location of Churchill High School in Livonia MI. Tables, door prizes, refreshments, and free parking will be available. Talk-in on 146.52 simplex. Reserved table space of 12-foot minimum is available. For further information, send an SASE to Neil Coffin WA8GWL, c/o Livonia Amateur Radio Club, PO Box 2111, Livonia MI 48151.

VERO BEACH FL
MAR 17-18

The Treasure Coast Hamfest will be held on March 17-18, 1979, at the Vero Beach Community Center, Vero Beach, Florida. Activities will include prizes, drawings, and a QCWA luncheon. Admission is $3.00 per family. Talk-in on 146.13/.73, 146.52/.52, and 222.34/223.94. For information, write PO Box 3088, Vero Beach FL 32960.

WAUKEGAN IL
MAR 25

The Libertyville and Mundelein Amateur Radio Society will hold its second annual Lamarsfest on Sunday, March 25, 1979, at the J. M. Club, 708 Greenwood Ave., Waukegan, Illinois. Doors will open at 7:00 am. There will be plenty of free parking, door prizes, and a large indoor flea market for radio and electronic items. Tables will be available at $4.00 each. Advance tickets are $1.50; $2.00 at the gate, with children under 10 free. Hot lunch will be available and there will be plenty of commercial exhibits and demonstrations. Talk-in on 146.94. For further information, write LAMARS (include SASE, please) at 1226 Deer Trail Lane, Libertyville IL 60048, or call (312)-367-1599.

MUSKEGON MI
MAR 30-31

The Muskegon Area Amateur Radio Council is sponsoring the ARRL Great Lakes Division Convention and Hamfest at the Muskegon Community College in Muskegon, Michigan, on March 30-31, 1979. This event will feature manufacturers' exhibits, technical forums, and a large swap shop. Ample parking and dining facilities are available. Friday evening at the Muskegon Ramada Inn, there will be a "Ham Hospitality" with libation courtesy of the MAARC and a Wouf Hong initiation. For additional information, contact MAARC, PO Box 691, Muskegon MI 49443, or H. Riekels WA8GVK; (616)-722-1378/9.

see page 317

NATCHEZ MS
APR 1

The Old Natchez ARC Hamfest will be held on Sunday, April 1, 1979, at the Natchez Convention Center, Natchez, Mississippi. The event will be indoors and air-conditioned. There will be free admission and swap tables. Talk-in on 146.31/.91 and 146.52. For information, write ONARC, 1226 Magnolia Avenue, Natchez MS 39120.

UPPER HUTT NZ
JUNE 1-4

The 1979 Annual Conference of the New Zealand Association of Radio Transmitters will be held on June 1-4, 1979, at Upper Hutt, New Zealand. Visitors are welcome to attend this conference. For registration forms, contact the Secretary, 1979 Conference Committee, PO Box 40-212, Upper Hutt NZ.

LOUISVILLE KY
JUN 29-JUL 1

The Louisville Area Computer Club will hold its 4th annual Computerfest™ 1979 on June 29 through July 1, 1979, at the Bluegrass Convention Center, Louisville, Kentucky. Activities include a flea market, seminars, and exposition, as well as activities for the entire family. Seminar and exposition admission is $4.00. Pre-registered Ramada Inn guests ($29.00, single; $34.00, double) receive free admission. For advance mail information, write Computerfest '79, Louisville Area Computer Club, PO Box 70355, Louisville KY 40270, or phone Tom Eubank, Chairman, at (502)-895-1230.

SSTV Recorder Controller

—replaces your index finger

C. A. Kollar K3JML
1202 Gemini St.
Nanticoke PA 18634

This article describes a device which will make the recording of a picture from a scan converter or SSTV camera more convenient. At present, using the Robot 400 scan converter, the procedure I use generally goes like this: The closed circuit TV camera is adjusted for proper focus and picture content. A frame is then snatched by the 400 and entered into its memory according to instructions in the manual. Once entered into the memory, the picture can be recorded for future playback by putting "transmit select" in "memory"

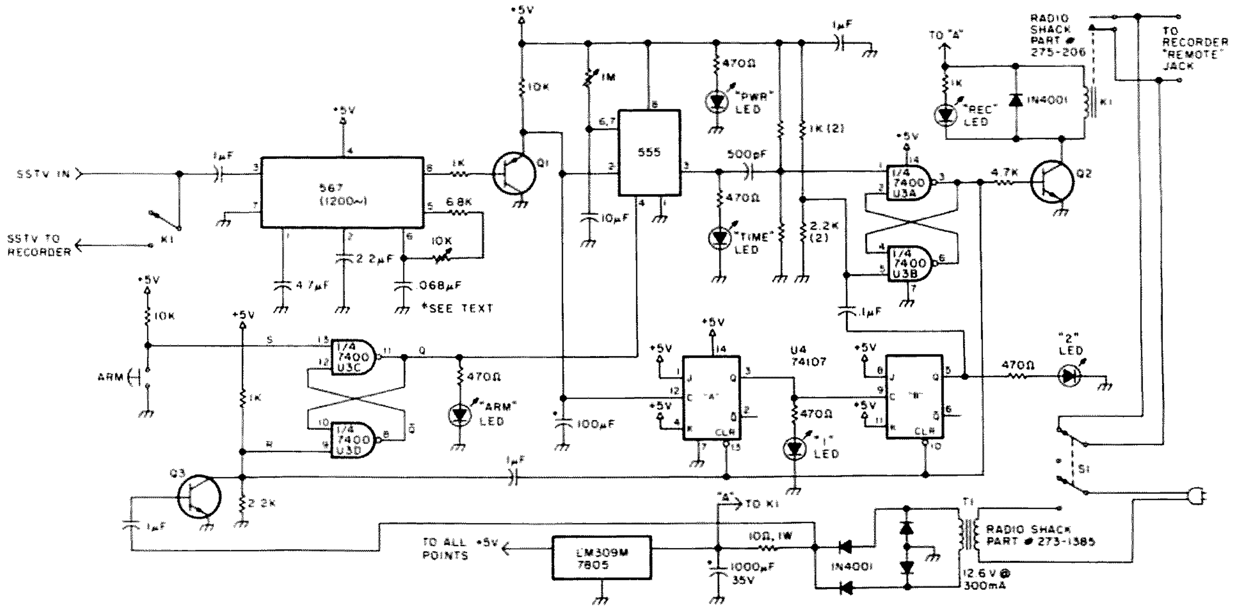

Fig. 1. SSTV tape recorder synchronizer. Q1—any general-purpose PNP silicon transistor; Q2—any general-purpose NPN silicon transistor.

and recording the resulting SSTV signal from the audio cable plugged into the "to tape" jack on the back of the 400.

This is where the tape recorder comes into play. Up to now, the procedure I followed was to watch the FSTV monitor for a blink indicating the end of one frame and the beginning of another. At this point, I would count seven seconds (a complete frame takes about eight seconds) and engage the tape recorder. This ensured that the 1200 Hz reset pulse at the end of the frame would be captured on tape to ensure proper vertical sync for the next complete frame. I then would watch very closely for three more winks, indicating that three complete frames had been recorded. After the third wink, the tape recorder would be disengaged. Three frames is the usual amount sent by SSTVers to try to ensure copy of the video through QRM. The disadvantage to this system is the necessity of watching for a wink, counting seven, engaging the tape recorder, counting three more winks (4 including the one immediately after engaging the tape recorder), and then disengaging the tape recorder. A momentary distraction can result in missing the sync pulse and starting in the middle of a frame or recording more or less than three frames.

With an SSTV camera, lighting and focus are first set up as usual. Then you must wait until the scan gets near the bottom of the frame, at which time you engage the tape recorder. Next, you must observe three complete frames and then stop the tape recorder. As with the 400, engaging the tape recorder when the scan is near the bottom ensures that the sync pulse for the first frame you will record will also be captured on tape.

Enter the SSTV tape recorder synchronizer. With this device, all you do is enter the picture into the 400 memory, set the transmit selector on the 400 to "memory," press the "arm" button on the synchronizer, and go about your business. The synchronizer will turn on your tape recorder at the proper time to capture the initial sync pulse, record three complete frames, and shut off automatically. There's no need to get cross-eyed watching for winks on your fast-scan monitor. With an SSTV camera, hit the arm button as soon as focus and lighting are set up, and the synchronizer will do the rest—no more counting frames.

Circuit Description

Initially, the circuit is in a standby condition where pin three of the 7400 (see Fig. 1) is low. This turns off

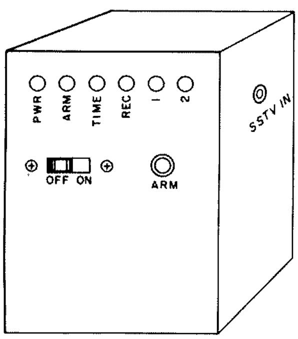

Fig. 2. Suggested front panel layout.

Front panel layout of the prototype.

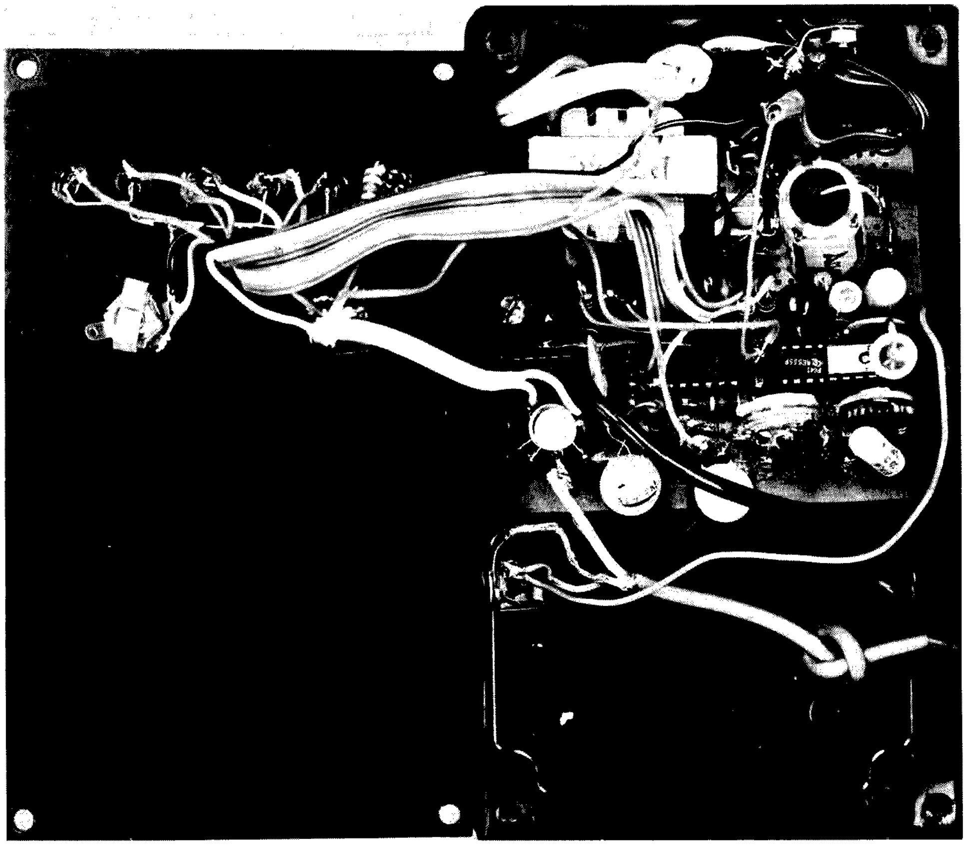

Enclosure opened to reveal the perfboard construction and parts layout.

Q2, de-energizing the relay. It also grounds pins 10 and 13 of U4, resetting the flip-flops to zero. The R-S flip-flop consisting of U3C and U3D is in the state where pin 11 (Q output) is low. This grounds pin 4 of the 555, disabling it. This initial state is ensured by Q3, which momentarily grounds pin 9 of U3D when power is applied. The circuit is set into operation by depressing the arm push-button, which now makes U3C, pin 13 low, which causes pin 11 of U3C as well as pin 4 of the 555 to go high, enabling the timer and lighting the arm LED.

SSTV audio is fed to pin 3 of the 567 decoder through a .1 uF capacitor. The output of the decoder (pin 8) is normally high and goes low whenever a 1200 Hz reset pulse is detected. This turns on Q1, bringing pin 2 of the 555, pin 12 of the 74107, and the positive end of the 100 uF capacitor to ground. The 100 uF capacitor is necessary to prevent the 74107 from counting more than once, because of glitches, during the duration of the reset pulse. When pin 2 of the 555 goes low momentarily, its output (pin 8) goes high, lighting the LED for a time determined by the 1 meg pot and 10 uF capacitor connected to pins 6 and 7. In this case, it is set up for seven seconds. At the end of seven seconds, pin 3 goes low, pulling the end of the 500 pF capacitor to ground, which in turn pulls pin 1 of U3A to ground momentarily. This sets the R-S flip-flop U3A/U3B, making pin 3 high. This high turns on Q2, pulling in the relay which turns on your tape recorder. It also makes pins 10 and 13 of the 74107 high, enabling the dual J-K flip-flop, U4.

U4 will now count the next four reset pulses (the initial reset pulse and also the next three indicating three complete frames) supplied by the 567 decoder whenever it sees 1200 Hz. On the fourth reset pulse, indicating the end of the third complete frame, U4B, pin 5 goes low, bringing one end of the .1 uF capacitor connected to it to ground. This in turn applies a momentary ground to pin 5 of U3B, resetting the flip-flop, and pin 3 goes low. When pin 3 goes low, Q2 stops conducting, and the relay drops out, stopping the tape recorder. Pin 3 of U3A also pulls pins 10 and 13 of U4 to ground, resetting the flip-flops to zero and disabling them. At the same time, pin 3 of U3A pulls one end of the .1 uF capacitor connected to pin 9 of U3D to ground, thereby applying a momentary ground to pin 9, resetting the flip-flop U3C/U3D. Pin 11 of U3C goes low and disables the 555 timer.

The LEDs, placed as they are, give an indication of proper circuit operation for maintenance and operation of this unit. One set of contacts on K1 removes SSTV audio from the tape recorder when its remote input becomes disengaged by the synchronizer so as not to record anything during the time the recorder is coming to a stop.

Initial Setup

There are only two adjustments to be made to place the synchronizer into operation—the 1200 Hz decoder and the 555 timer. The 1200 Hz decoder can be set up in one of two ways. Method #1 is to connect a frequency counter with a high-impedance input between pin 5 and ground and adjust the 10k pot connected to pin 6 of the 567 for 1200 Hz. Method #2 is accomplished by connecting a VOM, VTVM, or scope to pin 8 of 567. While applying an accurate 1200 Hz, adjust the pot mentioned above until you see the meter drop suddenly to zero. You will notice a small amount of play in the rotation of the pot between the points where the voltage is zero and where it is 5 volts. The pot should be set at the middle of this range. The 555 timer is set up by observing the LED connected to pin 3 of the 555. Disconnect the 500 pF capacitor connected to pin 3, press the arm button, and the arm LED should light. Momentarily short pin 2 of the 555 to ground; the time LED should light for a period of time and then go out. Adjust the 1 meg pot connected to pin 6 of the 555 so that the light stays lit for 7 seconds. Reconnect the 500 pF capacitor. Initial adjustment is now complete.

Operation

Connect the output of your SSTV camera to "SSTV in" on the syn-

chronizer, or, if using the Robot 400, insert a picture into the memory of your scan converter. Connect the output of the scan converter to "SSTV in" on the synchronizer. Connect "SSTV to recorder" to the auxiliary input on your tape recorder. Connect "to recorder remote" to your recorder remote jack. Your recorder motor functions should be normal (S1 off). Put S1 on, and note that the power LED lights. Put your recorder into the record mode; your recorder motors should not operate. Depress the arm push-button; the arm LED should light. The very next 1200 Hz reset pulse that arrives should light the time LED. After 7 seconds, the time LED goes out momentarily, the record LED should light, the relay should pull in, and your recorder should start. In sequence, on arrival of the 1200 Hz

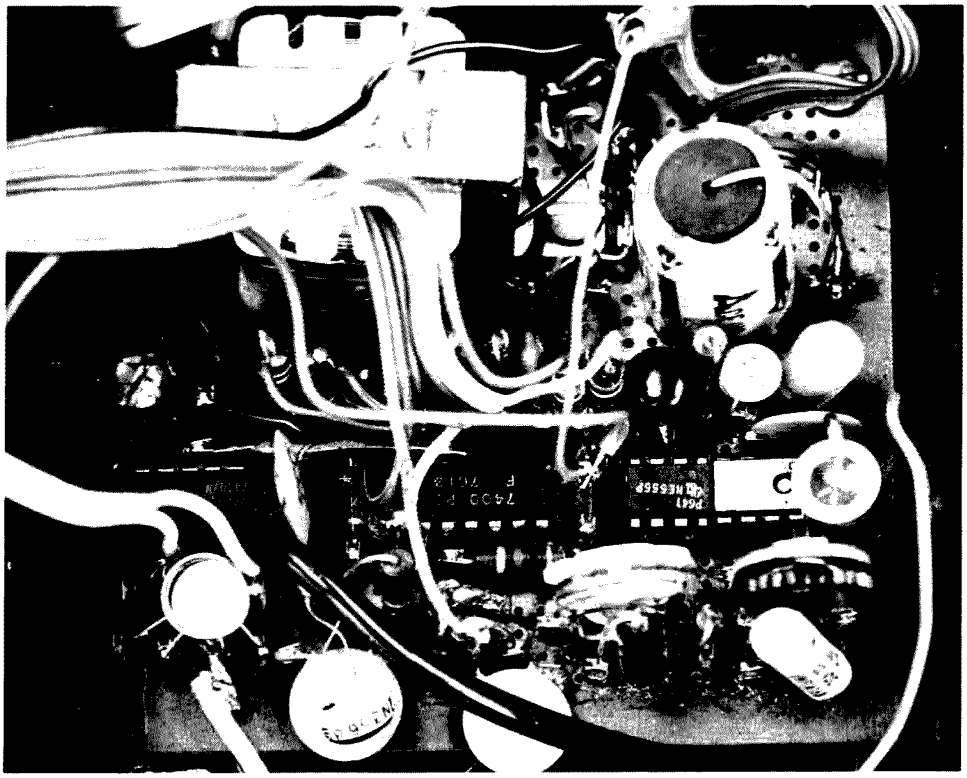

Close-up of the perfboard and core wiring.

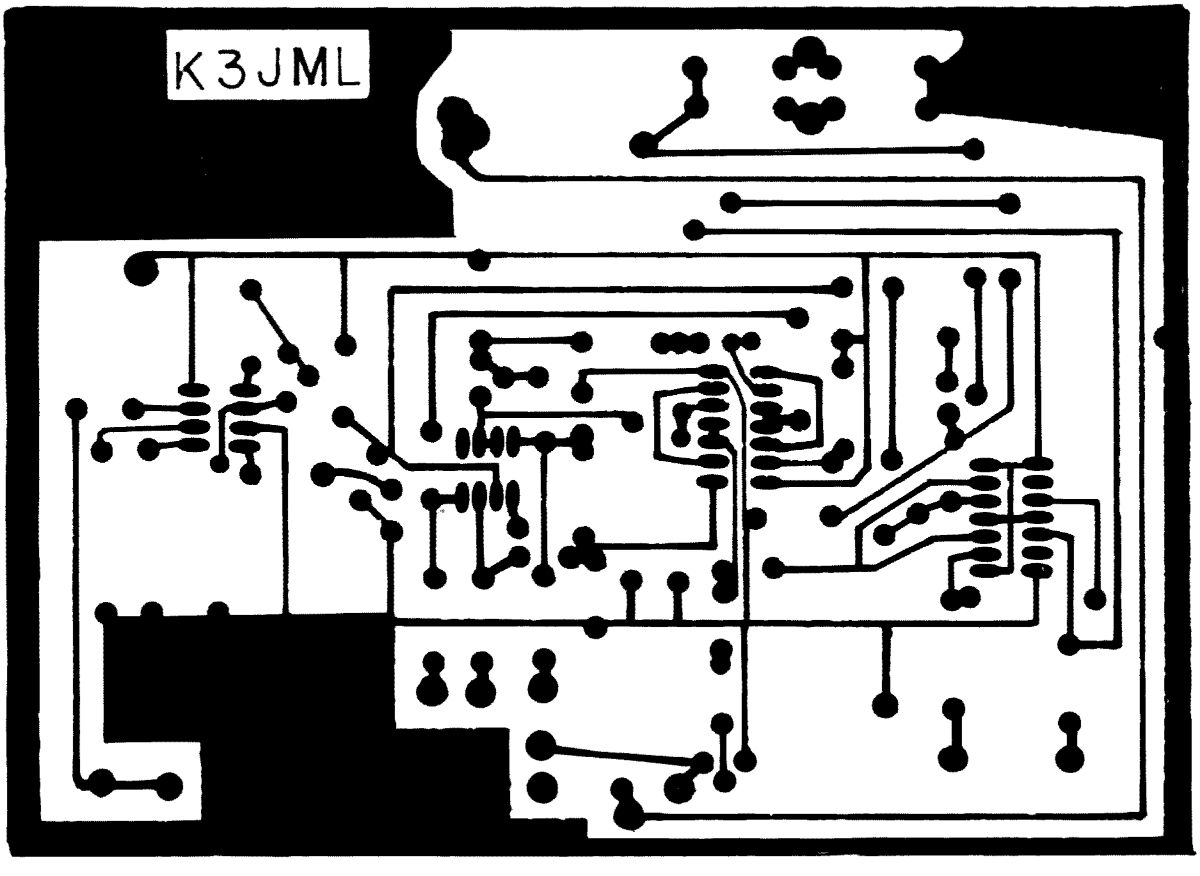

Fig. 3. PC board.

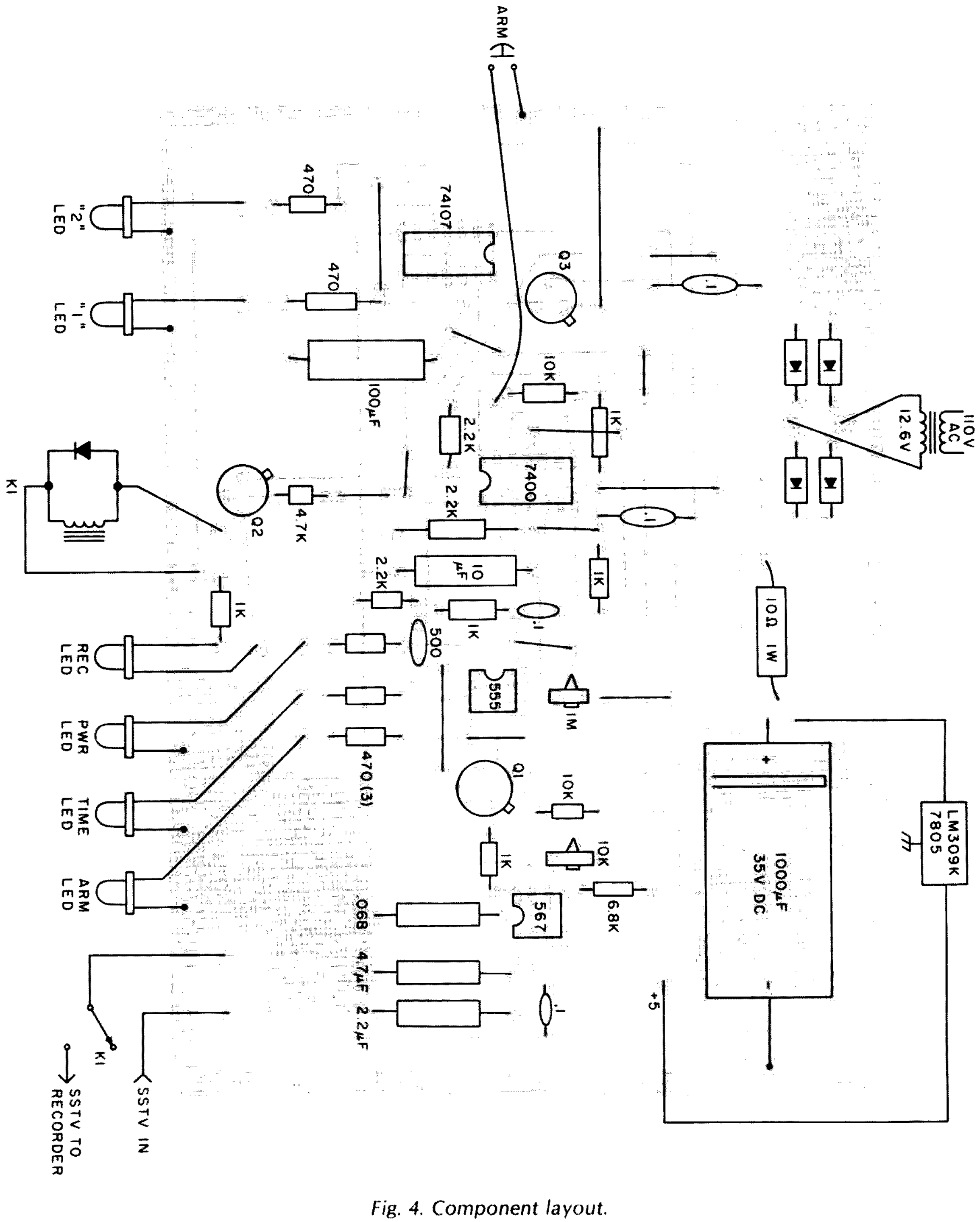

Fig. 4. Component layout.

sync pulses, the "1" LED, the "2" LED, and both the "1" and "2" LEDs should light. Eight seconds after the "1" and "2" LEDs light, all LEDs except the power LED should go out, and the recorder will stop.

Comments

Fig. 2 is the suggested panel layout for the synchronizer. Parts layout is not critical as long as good wiring practice is followed. All parts are off-the-shelf items available at most electronic stores. The .068 capacitor connected to pin 6 of the 5676 decoder should be a good quality mylar to avoid problems with the decoder drifting off frequency.

Please note that the photos of the synchronizer are of the prototype, in which perfboard was used to build the circuit. The circuit may be built in this fashion, or the full-scale PC layout shown in Fig. 3 may be used instead. If the PC layout is used, a suitable housing will have to be chosen to accommodate it.

My sincere thanks and appreciation go to Joe W7SI for the photos and to Stan K3ETN for the PC layout. Questions regarding this project will gladly be answered when an SASE is included.■

Receiver Diseases

—and how to cure them

Joseph J. Carr K4IPV
5440 South 8th Road
Arlington VA 22204

Two identical transceivers need repairs. One is completely dead—no sound, no lights, nothing works. The other works well, except that, on receive, a static-like "frying-eggs" sound is heard occasionally, and it is capable of drowning out all but S9+ signals. Which of these will be the hardest to troubleshoot?

Many inexperienced troubleshooters pick the

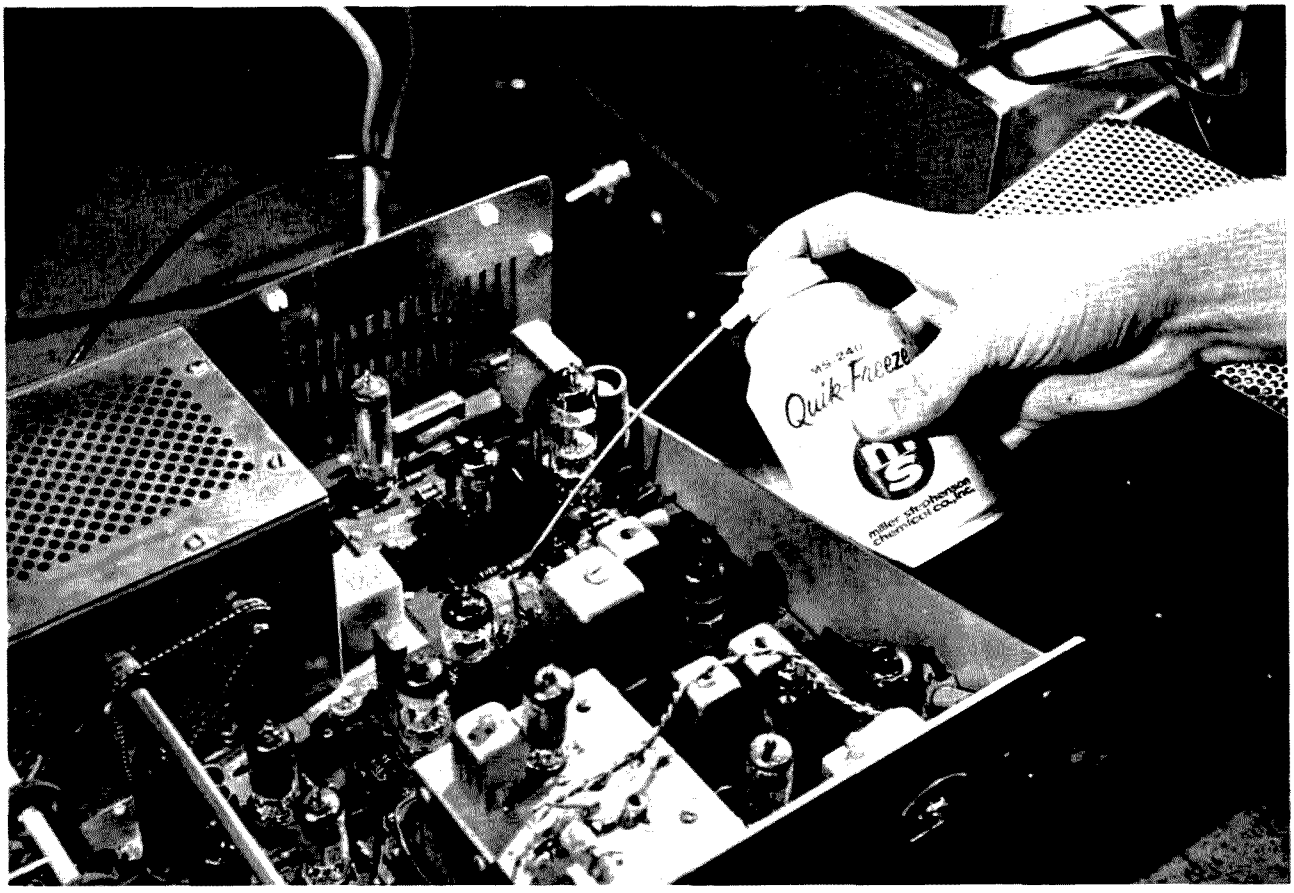

Photo A. Freon cool spray (available at most electronic wholesalers) will cool off the circuit and help locate bad components.

dead receiver/transceiver, probably because the symptoms hint at some catastrophic failure. Dead receivers, whether the dial lights come on or not, are usually relatively easy to troubleshoot. Even if smoke has rolled out of the innards (some say especially), the problem of locating the faulty part(s) is actually pretty easy.

It is the more subtle problems that tend to snap your mind clean out of its socket! The static, pops, hisses, and miscellaneous oscillations and grumblings that a defective receiver is capable of generating are often rather difficult to pin down, especially in a short period of time. The professional servicer who hears a customer making such a complaint will often as not utter a silent "Oh, no!" and say a private prayer because he knows that such problems can take a lot of time, and there is a limit to how much of a labor fee the market will bear.

In this article, I will examine some of the causes of noises and the troubleshooting techniques appropriate to each by taking you through several case histories. These troubles have occurred in amateur, CB, and commercial communications receivers, plus a few million times in consumer equipment, so they are all but universal.

Case No. 1
A High-Pitched Whistle

Some years ago, I had to service a vacuum-tube receiver that had a high-pitched whistle superimposed on the audio output. In receivers, this could be caused by any number of devilish faults, but, in this case, it was relatively easy to pin down the section of the receiver at fault because the noise did not go away when the audio gain control was set to minimum. If anything, the apparent amplitude went up because of an improved signal-to-noise ratio.

The trouble in this case turned out to be in the power supply powering the audio preamplifier stages. A panel-mounted neon lamp (Fig. 1) was used as the power-on indicator, and this lamp was connected into the dc power supply, rather than in series with a 150k-Ohm resistor across the ac line as is normally done. The circuit designer apparently tried to gain a little dc voltage regulation with the lamp, forcing it to serve a dual function, thereby saving money.

The circuit (Fig.1) contained series resistances R1 and R2 to drop the voltage to the level required by the neon bulb and to limit current through the bulb so that a catastrophic burnout was prevented.

Capacitors C1, C2, C3, and C4 serve to decouple the stages being powered, while all but C3 also serve to filter out the 120-Hertz ripple component left by the rectifier. Capacitor C3 is of a lower value than the others and is usually a disc ceramic, mica, mylar, or even paper-type, rather than an electrolytic.

The technique of using a small-value disc ceramic capacitor in parallel with a high-value electrolytic seems ridiculous on first glance, but becomes more valid when you realize that many electrolytics (especially older types) are as effective as a block of wood at higher frequencies. The low-value capacitor becomes necessary even in some audio amplifiers and with i-f amplifiers with as low as a 50 kHz operating frequency. It is certainly most advisable if the stage powers a 455 kHz or higher i-f amplifier.

In the receiver with the "high-pitched whistle," the problem was that C4 had opened up. This allowed the now undecoupled stages to go into a low-frequency motorboating oscillation and also allowed I1-R2-C3 to operate as a neon relaxation oscillator. The frequency of oscillation is set by the time constant of R2-C3 and the firing potential of neon lamp I1. The symptom was a nauseating combination of a whistle modulated by a low-frequency motorboating oscillation.

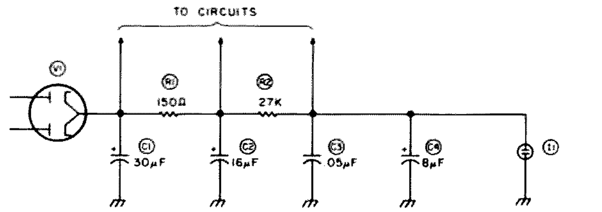

Fig. 1. An amplifier power supply using a neon glow lamp.

Case No. 2
Noisy Plate Loads

Many amateur receivers, as well as other equipment used by amateurs both in and out of their ham radio hobby, may tend to develop a sound that is often typified as "frying eggs" or "sizzling." This is especially prevalent in equipment that is allowed to take on moisture by being (often improperly) stored for a long time in a humid climate.

Some amplifier stages are resistor/capacitor coupled, so the plate load resistor of the first stage in a cascade chain will be a resistor. Still other amplifiers, such as the rf and i-f amplifiers in the receiver, are coupled through tuned rf transformers (see Fig. 2). In either case, internal arcing of the plate load, be it resistor or rf transformer, will be propagated through the following stages as a signal. In most cases, the result is the classic frying-eggs sound of a continuous arc, or thunder crashes of static of an intermittent arc.

In a multiple-i-f amplifier receiver or multistage audio amplifier, this noise can be a little difficult to locate, but a little "trick of the trade" can reduce the agony. In the case of both types of amplifier, you can troubleshoot by removing the tubes from their sockets one by one, until the noisy stage is found. A replacement tube will usually eliminate the tube from suspicion. With the power turned off and the tube out of the socket, connect a 10k-Ohm, 1-Watt resistor between the plate pin of the tube and power supply ground. This maneuver will draw "plate" current through the load resistor or transformer and will create the frying-eggs sound if that load is defective. If no trouble is found, go to the next stage back toward the input and repeat the procedure.

Of course, if the bad plate load is a resistor, then it should be replaced when

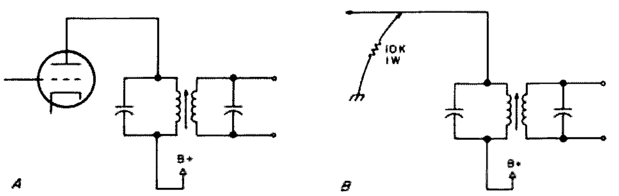

Fig. 2. (a) Vacuum tube i-f amplifier plate circuit. (b) A 10k-Ohm, 1-Watt resistor to ground will tell the tale.

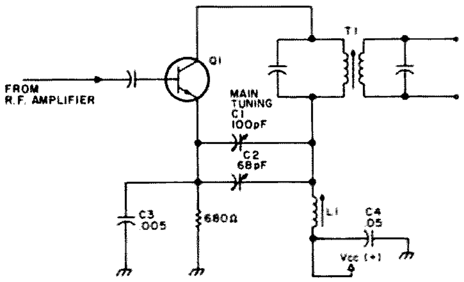

Fig. 3. High humidity over long times will cause the trimmer to arc.

found. But, in the case of i-f transformers, it might be worth attempting to repair—a luxury that amateurs can afford. This is not merely desirable, but becomes mandatory if the receiver is a few years old or the manufacturing company is no longer in business.

Very carefully pry apart the metal tabs holding the shield onto the transformer form and expose the coils and capacitors. Be very careful and work slowly, because sometimes the coil form has adhered to the shield and will be pulled from its mounting if the shield is pulled off vigorously before the wires and form are freed. Carefully examine the fine wires with a tiny screwdriver or toothpick to see that they are actually soldered to the wire tabs or i-f can terminals. Oddly enough, an unsoldered joint at this point may work for years before being jarred loose or before an oxide layer forms to break the connection.

Other sources of problems are the resonating capacitors across each coil. If they are disc ceramic, tubular ceramic, or mica types, then they may be easily replaced. But most i-f transformers use a fixed mica compression capacitor molded into the plastic base. There is no firm advice on how to repair such transformers. Try finding the metal tab leading from the capacitor to the terminal lug to which the coil is soldered. In most cases, it will appear to be one piece with the lug, but close examination reveals that it is actually a sandwich assembly. If you can cut this tab, even if a little of the plastic base must be melted to gain access, then you are in luck. Otherwise try forming a new terminal in one of the unused spots on the mounting, or obtain a new transformer.

Some old-timer electronic supply houses, especially those with a large TV-shop clientele, may have an old 455-kHz i-f transformer for sale. Alternatively, find a dealer (or mail order direct) who sells J. W. Miller products. They offer a line of i-f transformers that may be exactly what is required or can be modified to meet your needs with little effort. In fact, it is possible that J. W. Miller made the original under contract to the receiver manufacturer!

Case No.3 Shorted Trimmer Capacitors

Fig. 3 shows a converter stage (combination mixer and local oscillator) from a mobile receiver made several years ago. Transistor Q1 serves as both the local oscillator and the mixer in a superheterodyne design. Transformer T1 is the i-f transformer, while coil L1 is in the tuning circuit of the oscillator, along with C1 and C2. Capacitors C3 and C4 are used mainly for bypassing.

The trimmer capacitor (C2) is a compression mica variable and will suffer from the same problems as the fixed mica compression capacitors in the i-f amplifier. These will occasionally arc internally despite the relatively low voltage applied to the transistor. The result is the same sort of frying-eggs sound as before, but it is not always so easily found.

In this case, once the i-f transformer and L1 connections are eliminated, a 0.01 uF disc capacitor is inserted in series with the trimmer to block dc. If the arcing disappears, or is significantly reduced, then replace the trimmer capacitor. Do not be tempted to leave the apparently restored capacitor in the receiver because 1) dial calibration is now incorrect and 2) the trimmer will eventually fail more and kill the set. The trimmer was, after all, shorted, if only with a high resistance.

Case No. 4 Pn Junctions

Another noise source peculiar to solid-state rigs is any pn junction that becomes reverse biased. In a complex circuit, there may be several such junctions whose loss does not completely kill the receiver's operation, so noise results.

If a pn junction becomes reverse biased, it can produce a hiss-like "white noise." This phenomenon is used as the basis for a couple of popular amateur antenna bridges. In the circuit of Fig. 4, there is a noise generator made from a reverse-biased pn junction, in this case, a diode. If an oscilloscope with a wideband vertical amplifier were connected across terminals A-B, you would see a lot of "grass" on the CRT screen.

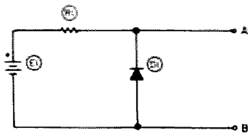

Fig. 4. Diode noise generator.

It sometimes happens that faults in capacitors, changed values in resistors, or certain other circuit defects can cause a junction to become reverse biased without completely upsetting the dc operation of the rest of the circuit. Consider the circuit of Fig. 5. This circuit operates from a dual-polarity power supply in which Vcc is positive to ground and Vee is negative to ground. The circuit also has a differential input stage in which the signal is applied to the base of transistor Q1A, and the operating characteristics of Q1B are held constant by a fixed resistor network.

In one problem involving this type of circuit, capacitor C1 became leaky (not a direct short, but a high resistance short) and that substantially reduced the contribution of Vcc(+) to the bias voltage appearing at point A. This caused the base-emitter potential of Q1B to become reversed, making the b-e junction into a noise generator, which sees Q1A effectively as a common-base amplifier followed by the rest of the high gain stages in the chain.

Case No. 5 Noisy Transistors

There is a possibility that a normally-biased transistor will become noisy and drown out signals being received. If the transistor is located in a low-level stage close to the input, then the gain of the following stages makes the problem even worse. Most of the time, the noise is of the familiar frying-eggs variety with a few extra

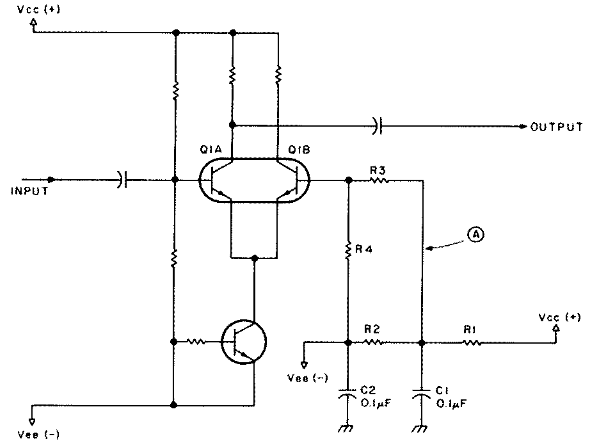

Fig. 5. Transistor wideband preamplifier.

pops and fizzes thrown in for good measure.

Most of the time, the type of noise I am talking about is sensitive to heat. By making the circuit hotter, you can often create the noise (almost at will), while making it colder will cause the noise to disappear for awhile. It seems, though, that most common thermal troubleshooting techniques cover too much area of the circuit at one time.

For example, take the common aerosol freon "circuit cooler" or "freeze spray" (see Photo A) used by many professional servicers. It can help pinpoint the location of bad components very quickly, if you can keep from spraying it on too many components at once. The same holds true for most heat sources used by servicers.

What is needed is a means for concentrating the cold or heat on one component at a time. One solution is the use of one of those oversize pieces of "spaghetti" tubing that seems to be in everybody's junk box from the times when a "universal" assortment was purchased. Simply cut one to three inches of tubing to fit snugly over the transistors or resistors under suspicion. If cooling is your goal, the tubing allows you to concentrate the spray only on the suspect component.

For heat treatment, simply place a small incandescent pilot lamp (#47 for 6-volt and #1892 for 12-volt are suitable) in the open end of the tubing, and connect it to a battery or dc supply. It has been my experience that truly heat-caused defects will show up within about three to five minutes under the lamp. Most of them will succumb to the increased heat in less than one minute.

Case No. 6 "It Goes Dead When Hot (or Cold)"

A solid-state transceiver was brought in for repair, and the owner complained that it worked in the morning, but not in the afternoon. This problem is not actually a noise problem, but is so common and so closely related to problem number 5 that it bears some attention.

Solid-state circuits can be quite sensitive to the thermal environment, hot and cold. Normally operating transistors will operate over a wide range of temperatures, but, when certain defects show up, then they become abnormally sensitive to changes in temperature.

During the summer, your mobile rig might work properly on the way to work in the morning, but when returning home in the late afternoon will simply refuse to do anything right. The problem is that the car was sitting in the hot sun all day long, and the interior is very hot. Until the air conditioner cools off the rig, the problem will remain. One car manufacturer's radio division measured the interior temperatures of cars sitting in the 90° F (32° C) Indiana sun for four hours at almost 160° F (71° C). Marginal solid-state devices might quit working under such conditions.

Winter gets in its licks, too. A complaint is sometimes heard that the rig does not work until the car is halfway to work. By that time, the car's heater has warmed the rig up to a temperature range where it will work. If you think this is a problem limited to those in the northern states and Canada, then keep in mind that I am a K4, and I have seen this problem on many occasions.

Both problems succumb to the same troubleshooting techniques as were used to find noise in case number 5. First, heat or freeze spray a large area, such as one corner of the chassis or an entire printed circuit board. Go to successively smaller areas until you are at the component level.

Case No. 7 Internal Component Arcing

Some noises can show up in the loudspeaker as a result of internal arcing resistors, capacitors, transformers, and the like. These can be miserably difficult to find. Even when the arcing is audible to the naked ear, without the loudspeaker, it seems to come from several components at once.

One effective technique for locating the arcing

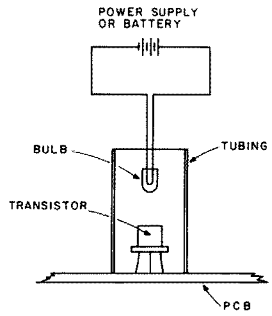

Fig. 6. A short length of "spaghetti" tubing will concentrate heat from lamp or mist from freeze spray on only one component at a time.

component is to use a long, thin section of rubber or neoprene tubing. Hold one end in your ear while using the other end as a probe to find the arcing component. The tubing will transmit a barely audible click loudly to your ear.

Actually, where possible, I prefer to use a modified medical stethoscope for this purpose. Although the professional type used by physicians and intensive care nurses is quite expensive, cheaper types are available in home "blood pressure kits" and in mail-order catalogues such as Edmund Scientific of Barrington NJ. Even one from a two-dollar child's "play doctor" kit will be sufficient.

If you use a medical stethoscope, be sure to remove the metal bell or end piece. This will serve to both localize the source of arcing and prevent you from getting an electrical shock in the case of inadvertent contact.

It will be necessary to scan the whole component in many cases because the lumen of the tubing is so small that the device becomes very directional. In fact, the resolution of this technique is so good that you can often tell which end of a paper or mylar capacitor contains the arc! ■

Roy Cawthon
2580 Norcross-Tucker Road
Apt. 95
Norcross GA 30071

Autophasing for WEFAX

—preserve your mental health

This article will introduce you to a method of automatically positioning the sync pulse, or margin, in GOES WEFAX pictures. It is a well-known fact among weather satellite amateurs that one can go practically nuts trying to manually position the margin of a picture. Even if you do succeed in getting the horizontal sync on the left edge of the paper, the strain on one's nervous system is simply too great. Inevitably, the phasing period at the start of the picture just seems too short.

Before I gave up hope, I got the idea of making the machine phase itself. After all, why shouldn't the machine do all the work? With that thought in mind, the following circuits were developed. The schematics appear in Figs. 1-5. The result was a phasing circuit that has proved that it can easily place the picture sync in the same spot each time a photo is made. This will help any operator's blood pressure remain normal while he's using his facsimile machine.

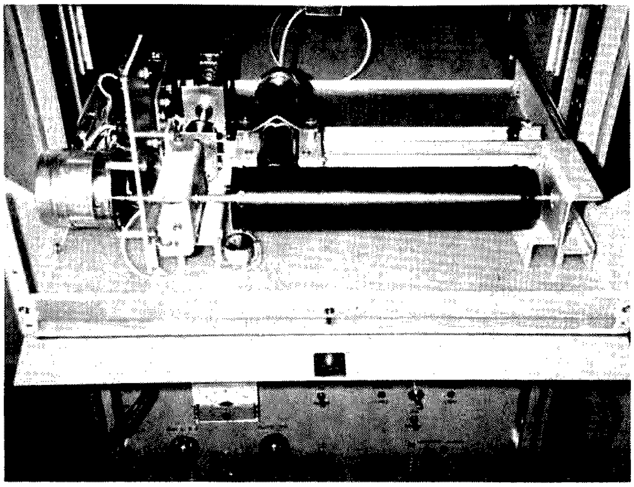

Photo A. Photograph of the author's drum recorder. Note the position of the solenoid. The magnet is epoxied to the left side of the drum. The forward and reverse limit relays are in the back corner. They remove power from the lamp carriage when a forward or reverse limit is sensed. Also, they light a corresponding indicator on the panel below the recording head.

Take a look at Fig. 1. This circuit has the function of a simple comparator. As the picture drum rotates, a small alnico magnet is attached to the drum so that it passes close by a small relay solenoid on each revolution. The resulting pulse of current is used to operate a transistor switch. Transistor Q1 squares up the pulse and inverts it. Also, Q1 clamps the pulse to TTL voltage levels. You must make sure, however, that you have enough voltage coming from the solenoid to forward bias Q1. It may be necessary to move the solenoid closer to the magnet. With Q1 operating, U1A restores the pulse to its original phase relation and drives J1 and also U2, pin 1.

If there were a sheet of photographic paper on the drum, and you had its edge at the centerline of the magnet, would not the pulse from U1A mark the edge of the paper? Unfortunately, this is not true. There is some phase shift introduced by the magnet and solenoid arrangement. You could put in a variable phase shifting network before Q1 to counteract this, but it is much easier to simply measure the shift and offset the paper edge. This need only be done once, and a permanent mark can be placed on the drum corresponding to the picture edge. I will discuss later, in the calibration procedure, just how this is done. For now, let's assume the pulse from U1A is coincident with the picture edge.

The other input to U2 is the sync pulse transmitted during the WEFAX phasing period. Connector J2 is attached to Fig. 5's U4B, pin 7, in my article "Attention, Weather Watchers! — advanced circuitry for WEFAX processing" (*73*, October, 1978). The signal on U4B, pin 7 is the output of the 1700 Hz low-pass

video filter. During the GOES WEFAX picture phasing period, the white set pot, R52, is set to give a pulse rising from −.5 V dc to ground at U4B, pin 7. This will be the correct white current setting for the GOES WEFAX. Meanwhile, back in Fig. 1, U3A accepts the −.5 V dc-to-ground sync pulse and buffers it. The second section of U3, U3B, converts the sync pulse into a TTL-compatible waveform.

Now, we can finally talk about U2. IC U2 has only one purpose in life. Its output sits high as long as the sync pulse in the WEFAX phasing period and the picture edge pulse, from U1A, are not overlapping in time. Assume, for the moment, that the picture drum is turning in phase lock with the satellite video. Usually, some time difference exists between the actual picture edge and the satellite sync pulse. This indicates that the picture is not phased properly. If an error in time exists, U2, pin 3 is high. I call this a phasing error. If U2, pin 3 happened to be low, the picture phase would be okay.

If U2, pin 3 is high, you need some way of reducing the time difference between the two pulses to zero. One way is to slightly reduce the frequency of the phase locked 60 Hz going into M1 in Fig. 1. If this happens, the picture edge pulse on U2, pin 1 will slowly drift or roll when compared with the WEFAX phasing period pulse at U2, pin 2. Eventually, the two pulses will cross, and both inputs to U2 are high. At this moment, M1 must be phase locked back on the satellite subcarrier so that the picture edge will drift no further. The phasing would then be accomplished.

The method of reducing the speed of M1 slightly is seen in Fig. 2. I use a programmable divider to control the speed of M1. ICs U5 and U6 comprise the divider. The divider is capable of dividing the 2400 Hz reference, from Fig. 4, by 40 or 41. Normally, when the picture phase is okay, U2, pin 3 is low.

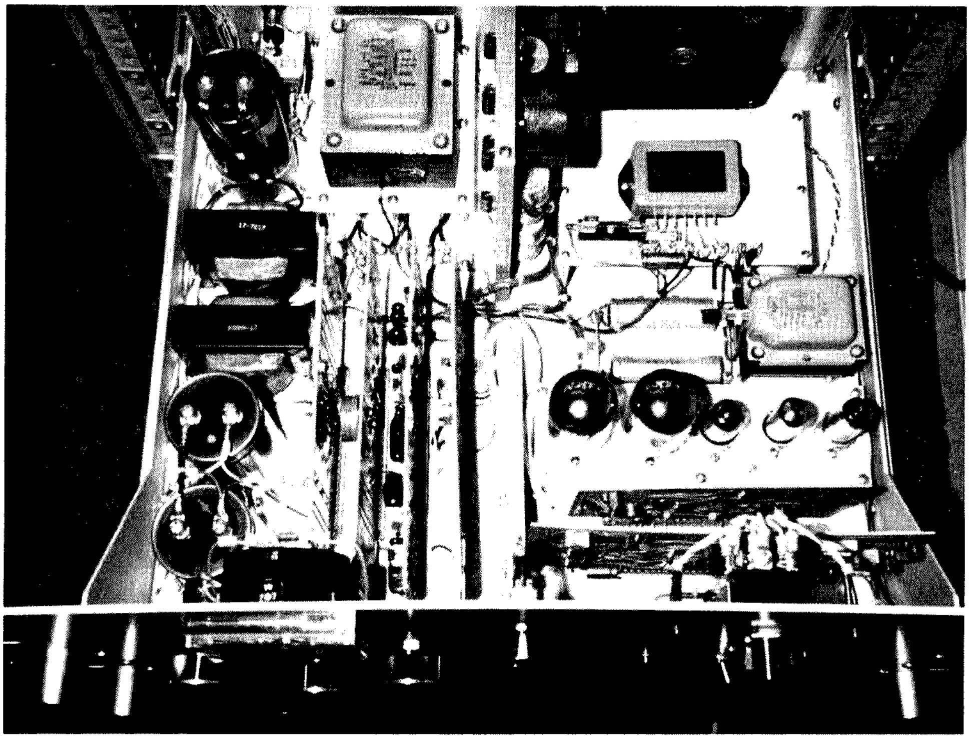

Photo. B. This is an inside view of the unit seen below the recorder head in Photo A. The two cards at the right front are the auto-phasing circuits. The S1-1025E power amp is on the heat sink in the right corner. The transformer in front of it is T1. A 300 V dc power supply for the R11-68 is on the subchassis and it uses five tubes. The five-inch fan at the back keeps things cool. My video processing circuits are built on the four cards at the left side of the chassis. The meter is the lamp current indicator.

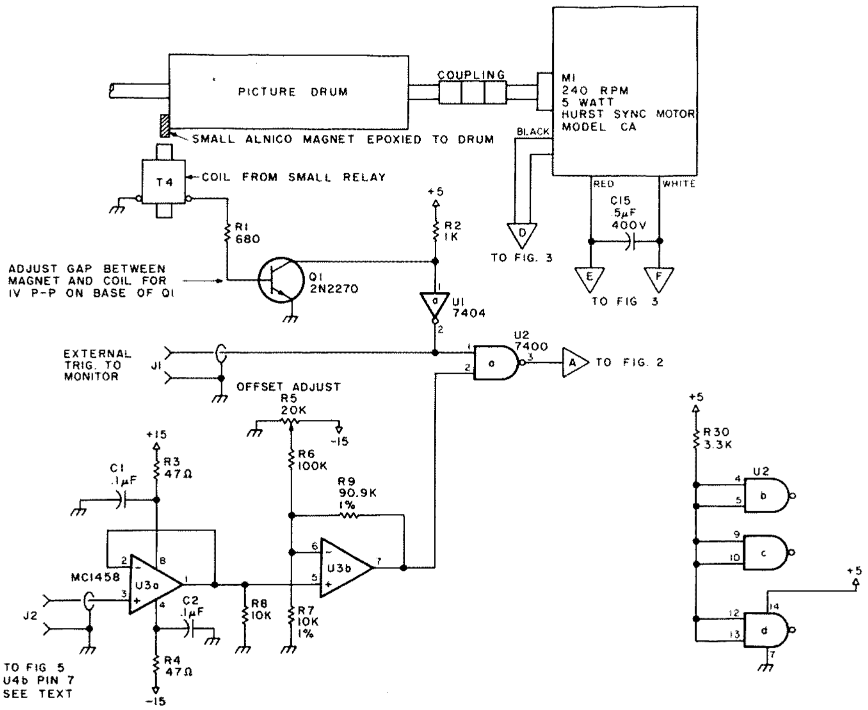

Fig. 1. Sync comparator.

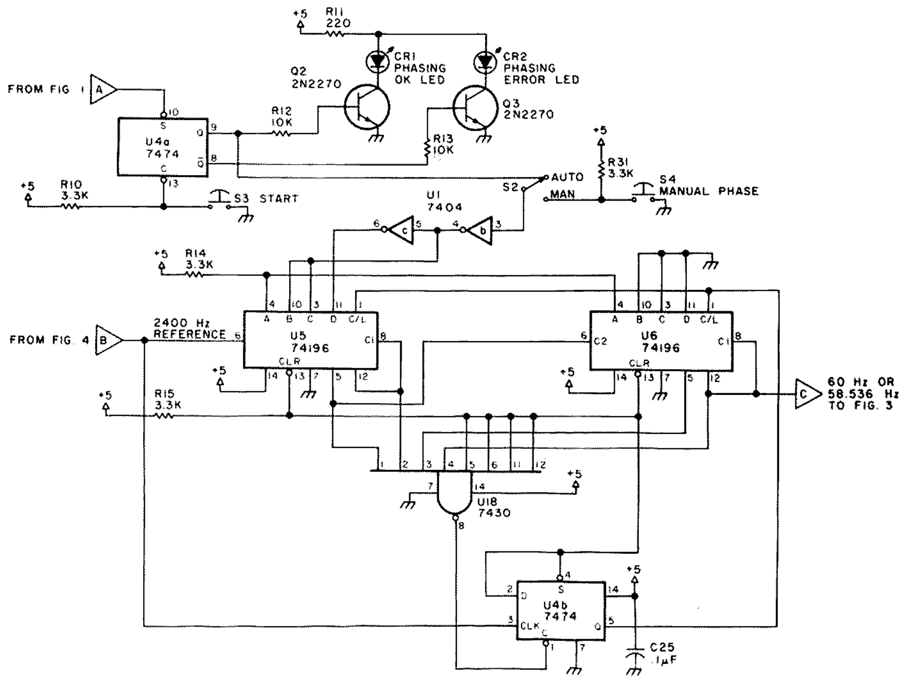

Fig. 2. Programmable divider.

This sets the Q-output on flip-flop U4A to one. The phasing-okay LED, CR1, now lights, and the correct bi-quinary word is loaded into the divider to do division by 40. U6, pin 8 now supplies a 60 Hz locked reference to the low-pass filter in Fig. 3 and, in turn, to the motor amplifier.

As soon as the WEFAX phasing period starts, it is necessary to test the picture phase. At this moment, the start button, S3, is depressed and flip-flop U4A is cleared. The phasing-effort LED will now come on, and the programmable divider is instructed to divide by 41. The picture edge pulse begins to drift slowly now with respect to the reference, since the drum slowed down. The drum motor is now running at 58.536 Hz. IC U2 is now looking for the time when the two pulses will cross. The frequency of 58.536 Hz provides a slow enough drift so that the two pulses do not happen to miss each other. Also, it is slow enough so that the results obtained are repeatable. That is, it puts the margin in the same place each time. As soon as the two pulses cross, U2, pin 3 switches low and U4A is set. The phasing-okay LED now comes on, and division by 40 is loaded again into the divider. The synchronous motor, M1, jumps extremely fast to the proper speed so that the margin remains properly phased.

You now have the picture phasing accomplished with a minimal amount of work on your part. Perfectionists should be able to eliminate the start button by utilizing a 300 Hz bandpass filter to detect the picture start tone. This start tone immediately precedes the phasing period. The filter could feed a peak detector and, in turn, charge a capacitor. Next, the voltage on the capacitor could be sensed by a voltage comparator and used to fire a one-shot. The one-shot could control U4, pin 13. I haven't incorporated this into my system, since I have chosen not to eliminate myself entirely from the process.

Now, suppose I had chosen to manually phase the picture, or, for some reason, I missed the phasing period. The phasing switch, S2, is set to manual. The manual phase button, S4, is simply held depressed. At this point, a monitor oscilloscope is necessary. The scope must have its timebase set to 250 ms, and then it must be externally triggered by the pulse on J1. Also, the satellite video is supplied to the scope's vertical

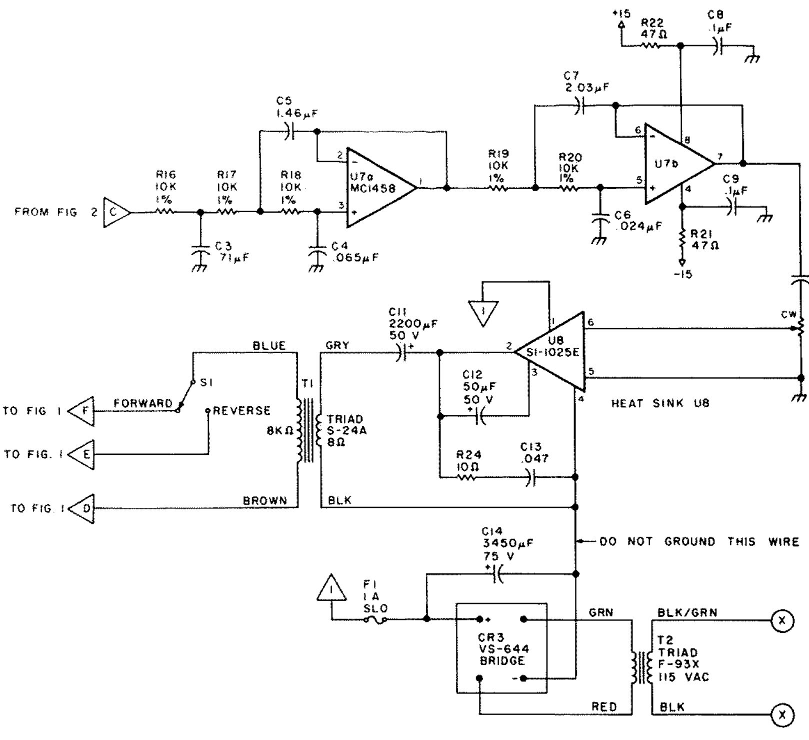

Fig. 3. 70 Hz low-pass filter and power amplifier.

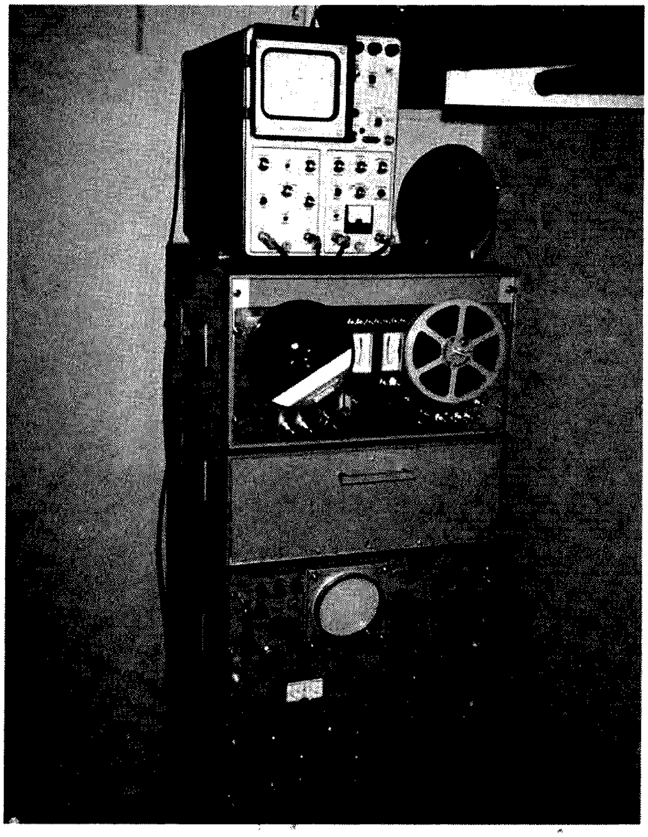

Photo C. This is an overall view of the author's GOES WEFAX station. The scope on the top is a customized Tektronix 561B. It is used in conjunction with the Tektronix C-27 camera to make 4 by 5 Polaroid™ prints of WEFAX pictures. The tape deck is seen in the rack below the 561. Below the tape deck is the drum recorder in its protective enclosure. The door opens down and the machine slides out. The scope below this is used as a waveform monitor. It is used for manual phasing and checking signal quality. Below the monitor is the machine that powers the drum recorder head. It does the video and sync processing. Also, it contains the power amplifiers for the motors. My receivers are housed in a separate rack and were not shown here. I use a 200-channel synthesized radio for 136-138 and a double-conversion custom-built receiver for GOES.

amplifier. The scope screen now depicts what is happening on the paper drum one line at a time. If the position the sync pulse takes during auto-phase is known, you can manually move it there now by holding down the manual phase button, S4. When the pulse arrives on its desired position, S4 is simply released.

Finally, the input frequency for the programmable divider, U5, pin 6, is generated in Fig. 4. To begin, a 2.4 MHz oscillator module was purchased from International Crystal Mfg. Co. The 2.4 MHz TTL square wave is buffered by U1D and U1E. ICs U9, U10, and U11 divide the 2.4 MHz down to 2400 Hz. During real-time operation, the 2400 Hz is fed directly to the programmable divider by S5. Also, it may be recorded on tape via capacitor C39 for playback later. During playback, the 2400 Hz that was recorded on tape locks up U12. U12 is a phase locked loop chip that has its vco adjusted to free run on 2400 Hz by R29. The purpose of U12 is to compensate for any speed variation in the tape deck and also to provide a clean signal for the programmable divider.

There you have it; you now have a complete state-of-the-art phasing system for the new GOES WEFAX broadcasts.

Calibration Procedure

First of all, check the wiring before applying power. These circuits should work the first time if the wiring is okay. After giving everything a thorough going over, turn on the power supply. Check to see that the voltage levels are correct and that the ripple is

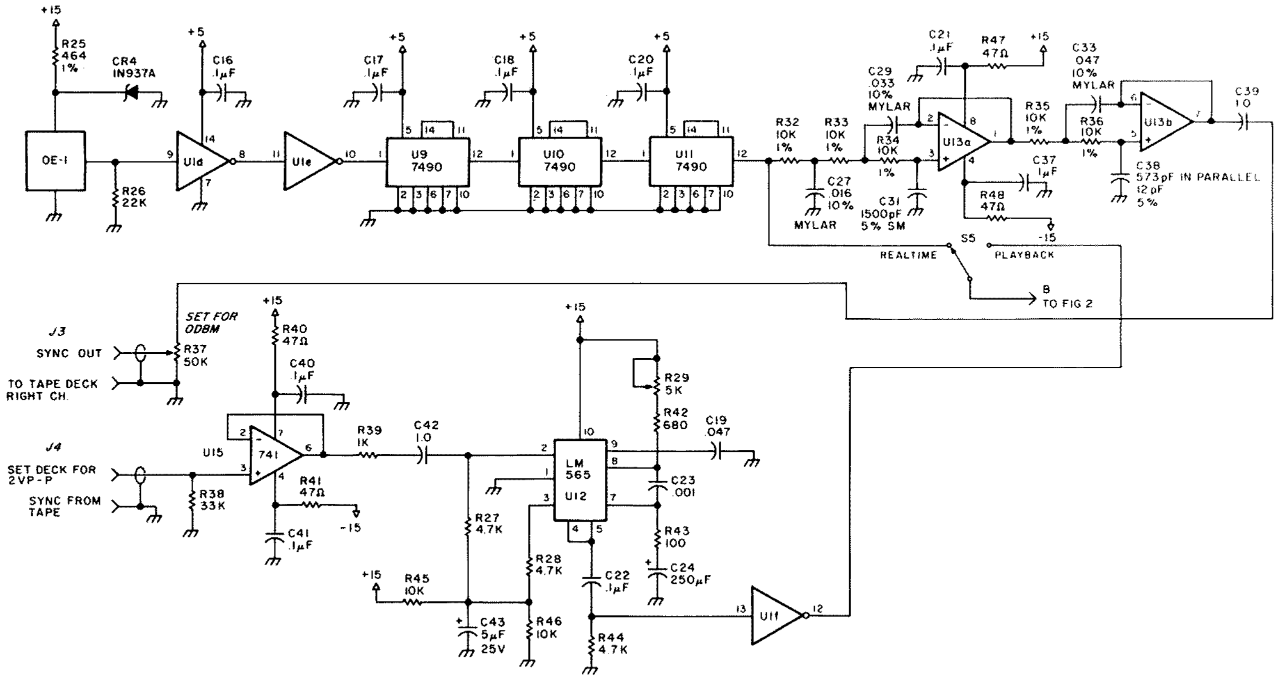

Fig. 4. Sync generator.

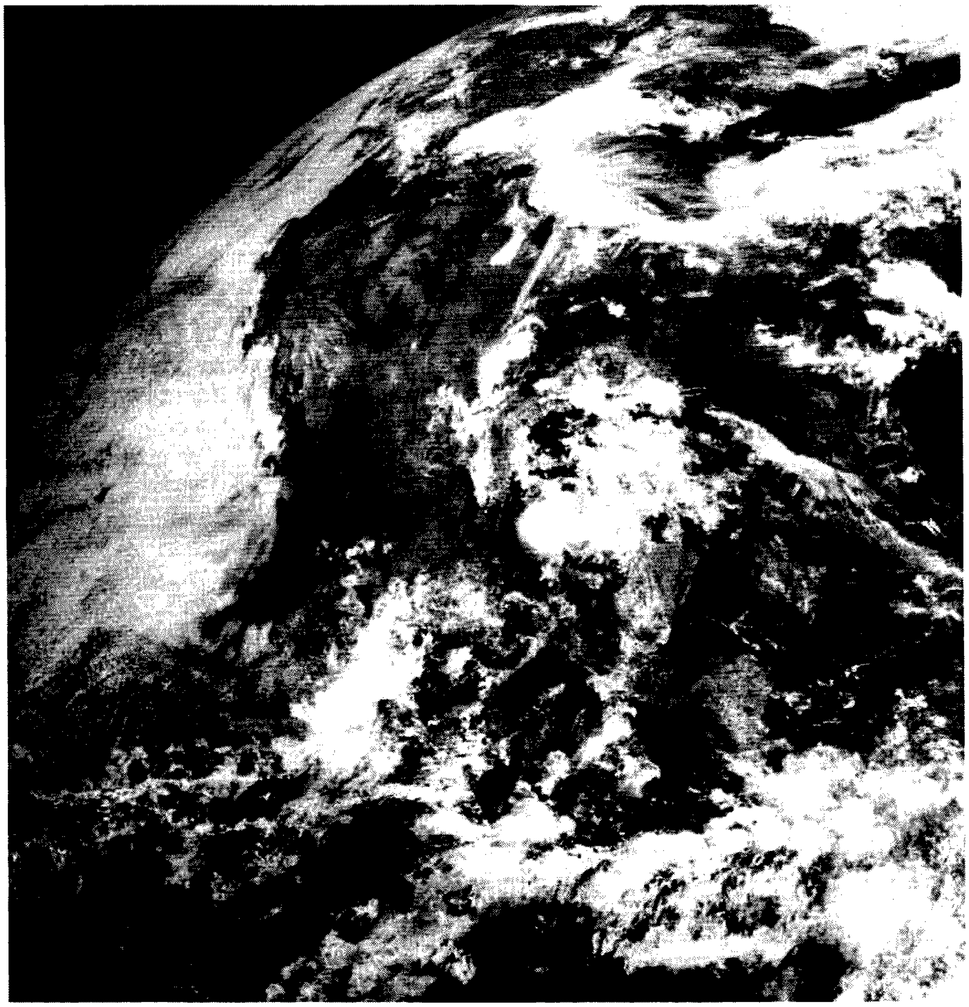

Photo D. This is an example of a properly phased GOES WEFAX picture. It was received and processed by the equipment in Photo C.

low. The ripple should only be several mV p-p. Next, measure the voltage between U8, pin 1 and U8, pin 4. With R23 adjusted fully CCW, the voltage should be about 50 V dc. Now, connect a dc-coupled scope to U11, pin 12 and check for a 2400 Hz square wave. Connect a counter to U1E, pin 10 and check the oscillator, OSC-1, for 2,400,000.0 Hz. Move the counter over to U1F, pin 12, and, with S5 in real time and J4 disconnected, adjust R29 for 2400 Hz. Switch S2, the phasing switch, to manual and connect the counter to U6, pin 8. You should read 60 Hz.

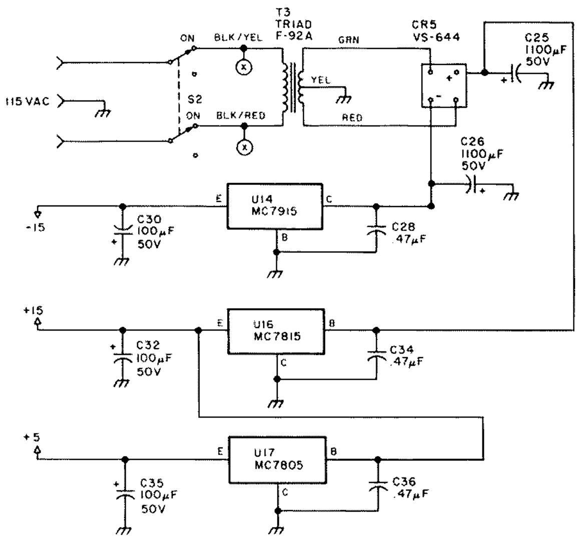

Fig. 5. Power supply.

Next, depress the manual phase button, and the counter should read 58.536 Hz. This checks the divider. Release the manual phase button and connect a VOM, on a high ac voltage range, across the blue and brown wires on the secondary of T1. Adjust R23 CW until 117 V ac is read on the meter. M1 should now be running. Next, move your dc-coupled scope to the base of Q1. Check the amplitude of the pulse from the magneto. You need at least 1 volt peak to ensure that Q1 turns on. The positive half cycle will forward bias Q1. If the pulse level is too low, move the solenoid in closer to the magnet. Move the probe to the collector and check for a TTL pulse of approximately 10 ms duration. The inversion of this pulse will be on J1.

It is now necessary to use a GOES WEFAX signal. A prerecorded signal will be desirable. With the circuits completed and tested, as described in "Attention, Weather Watchers!", connect J2 to U4B, pin 7 in the video filter. Switch both function switches to playback, start the tape, and adjust the white set pot for a pulse that rises from −.5 V dc to ground during the phasing period at U4B, pin 7. Next, adjust R5 in Fig. 1 for a zero-to-five-volt pulse on U3B, pin 7. Finally, with S2 in auto, start the tape at the beginning. The phasing-okay LED should be on as the drum spins. As soon as the phasing period starts, check the picture phasing by pressing the start button. The error LED will now come on and will remain on until the two pulses cross. When the two pulses cross, the phasing-okay LED will come on, indicating that phasing was accomplished.

I mentioned earlier that there is a phase shift introduced by the magnet and the coil that offsets the true picture edge about an inch or so. The easiest way to correct this is to find the point on the drum that corresponds to the actual picture edge. To do this, you will need to load the drum with photographic paper and place the paper's edge in line with the magnet's centerline. Now, start the

Parts List

C1	.1 uF, 50 V monolytic (mono)
C2	.1 uF, 50 V mono
C3	.71 uF, 100 V mylar*
C4	.065 uF, 100 V mylar*
C5	1.46 uF, 100 V mylar*
C6	.024 uF, 100 V mylar*
C7	2.03 uF, 100 V mylar*
C8	.1 uF, 50 V mono
C9	.1 uF, 50 V mono
C10	1.0 uF, 50 V mono
C11	2200 uF, 50 V electrolytic
C12	50 uF, 50 V electrolytic
C13	.047 uF, 100 V mylar
C14	3450 uF, 75 V electrolytic
C15	.5 uF, 400 V (supplied with M1)
C16	.1 uF, 50 V mono
C17	.1 uF, 50 V mono
C18	.1 uF, 50 V mono
C19	.047 uF, 100 V 10% mylar
C20	.1 uF, 50 V mono
C21	.1 uF, 50 V mono
C22	.1 uF, 50 V mono
C23	.001 uF, 50 V mono
C24	250 uF, 25 V electrolytic
C25	1100 uF, 50 V electrolytic
C26	1100 uF, 50 V electrolytic
C27	.016 uF, 10% mylar
C28	.47 uF, 50 V mono
C29	.033 uF, 50 V 10% mylar
C30	100 uF, 50 V electrolytic
C31	1500 pF 5% silver mica
C32	100 uF, 50 V electrolytic
C33	.047 uF, 50 V 10% mylar
C34	.47 uF, 50 V mono
C35	100 uF, 50 V electrolytic
C36	.47 uF, 50 V mono
C37	.1 uF, 50 V mono
C38	573 pF in parallel with 12 pF 5% silver mica
C39	1.0 uF, 50 V mono
C40	.1 uF, 50 V mono
C41	.1 uF, 50 V mono
C42	1.0 uF, 50 V mono
C43	5 uF, 25 V electrolytic
CR1	1.7 V, 20 mA LED
CR2	1.7 V, 20 mA LED
CR3	VS-644 bridge rectifier assembly, 600 V @ 2 A
CR4	1N937A
CR5	VS-644
F1	1 Amp slow blow
J1	BNC female chassis mount connector
J2	BNC female chassis mount connector
J3	BNC female chassis mount connector
J4	BNC female chassis mount connector
M1	240 rpm 5-Watt synchronous Hurst motor model CA
Q1	2N2270
Q2	2N2270
Q3	2N2270
R1	680 Ohm, ¼ W 10%
R2	1k Ohm, ¼ W 10%
R3	47 Ohm, ¼ W 10%
R4	47 Ohm, ¼ W 10%
R5	20k 1-Watt wire-wound 20-turn PC pot
R6	100k, ¼ W 10%
R7	10k RN55 1%
R8	10k RN55 1%
R9	90.9k RN55 1%
R10	3.3k, ¼ W 10%
R11	220 Ohm, ¼ W 10%
R12	10k Ohm, ¼ W 10%
R13	10k Ohm, ¼ W 10%
R14	3.3k, ¼ W 10%
R15	3.3k, ¼ W 10%
R16	10k RN55 1%
R17	10k RN55 1%
R18	10k RN55 1%
R19	10k RN55 1%
R20	10k RN55 1.%
R21	47 Ohm, ¼ W 10%
R22	47 Ohm, ¼ W 10%
R23	10k, 1 W wire-wound 20-turn pc pot
R24	10 Ohm, ¼ W 10%
R25	464 Ohm RN60 1%
R26	22k, ¼ W 10%
R27	4.7k, ¼ W 10%
R28	4.7k, ¼ W 10%
R29	5k Ohm, 1 W wire-wound 20-turn pc pot
R30	3.3k Ohm, ¼ W 10%
R31	3.3k Ohm, ¼ W 10%
R32	10k RN55 1%
R33	10k RN55 1%
R34	10k RN55 1%
R35	10k RN55 1%
R36	10k RN55 1%
R37	50k, 1 W wire-wound 20-turn pc pot
R38	33k, ¼ W 10%
R39	1k, ¼ W 10%
R40	47 Ohm, ¼ W 10%
R41	47 Ohm, ¼ W 10%
R42	680 Ohm, ¼ W 10%
R43	100 Ohm, ¼ W 10%
R44	4.7k, ¼ W 10%
R45	10k, ¼ W 10%
R46	10k, ¼ W 10%
R47	47 Ohm, ¼ W 10%
R48	47 Ohm, ¼ W 10%
S1	SPDT 120 V toggle
S2	DPDT 120 V toggle
S3	SPST push-button
S4	SPST push-button
S5	SPDT toggle or rotary switch
T1	TRIAD S-24A 8-Ohm-to-8k-Ohm, 15 W
T2	TRIAD F-93X
T3	TRIAD F-92A
T4	solenoid from a relay—I use a coil from a model KRP11AG Potter and Brumfield.
U1	SN7404
U2	SN7400
U3	MC1458
U4	SN7474
U5	SN74196
U6	SN74196
U7	MC1458
U8	Sanken S1-1025E hybrid power IC. An S1-1020 is a good substitute.
U9	SN7490
U10	SN7490
U11	SN7490
U12	LM565
U13	MC1458
U14	MC7915CP
U15	LM741
U16	MC7815CP
U17	MC7805CP
U18	SN7430
OSC1	International Crystal Mfg. Co. OE-1 oscillator module.

*The desired value is obtained by paralleling two or more capacitors. Use a good quality capacitor. The value doesn't have to be exactly on the calculated value shown.

drum, turn on the tape deck, and wait for the phasing period to start. As soon as it begins, depress the start switch and allow the machine to phase. Next, switch on the lamp and allow part of the picture to expose. Remove the paper and develop it. Note the position of the sync on the paper. Place the developed picture back on the drum the same way it came off. Make a small mark on the drum corresponding to where the sync is on the paper. Remove the paper and scribe a line on the drum where the mark is. This line is to be used to indicate where the paper's edge will go from now on each time the drum is loaded.

Load the drum with a fresh sheet of paper and place its edge along the new line. Remake the tape-recorded picture once more. Allow the drum to phase automatically. This time when the phasing is accomplished, the sync will be positioned at the edge of the photo. If you make pictures in the reverse direction, a phasing mark will have to be located for the opposite direction, also. To do this, the above process will have to be repeated. When you finish, there will be one mark on the drum for pictures made in the forward direction and one for the reverse direction.

Please take careful note of the photos showing my station. Details of the solenoid and magnet may be seen in the picture of the recorder. Good luck in getting your system on the air. If you have come this far, I am sure you have quite a station by now. If you have any questions, please include an SASE.■

LETTERS

from page 15

suggest an imaginative and potentially beneficial public service television concept and that this type of communications activity is one which deserves considerable attention in the overall inquiry."

The FCC requested comments in BC Docket No. 78-253 from all interested parties. These comments are due (original and six copies) at the FCC, Washington DC 20554, by December 11, 1978.

S. E. Piller W2KPQ
President
Communicasting Association of America, Inc.
Syosset NY

FRESH VIEWPOINT

Being an active amateur for three years and hoping to be one for at least another thirty, I feel inclined to respond to your criticism of the ARRL. From my Novice days on, I have been brought up on the thinking and ways of the League. On the whole, this organization has been superb in helping me grow in the hobby. Many new things have come about, and ham radio is still around because of the League.

At this point, the accolades end and the real essence of my correspondence surfaces. In the beginning, you and your magazine really rubbed me the wrong way, and, as usual, I merely discarded your commentaries. Well, I guess everyone grows up, and after many hours of mental soul-searching and objective meditation, I finally saw the light.

Mr. Green, thank you very much for providing about the only fresh viewpoint in a too-long monopolized field. It seems that we hams have become far too complacent in our thinking. This is undoubtedly a very dangerous and unhealthy situation.

Although there are points of disagreements in our thinking, at least you have spurred my mind to realize the presence of other possibilities. I now read the rebuttals you receive from other hams and can see the fear I once experienced. I can only urge all my counterparts to just stop for a few minutes and examine their way of thinking.

Ham radio is going through an amazing period of change and growth, and it certainly needs more than one voice to express its needs. I personally wish you good luck in your attempts concerning the upcoming WARC, and thanks again.

Michael A. Roscoe K3VK
Sharon PA

ATLAS CLASS

In the past, you've printed letters from WA5TUM and AA6US commending Atlas Radio and their service. All I can say about Atlas service is, "FANTASTIC."

On September 20, my Atlas 350-XL became inoperative. I called Clint Call at Atlas and, after describing the problem, Clint told me to send the 350-XL and p/s to Steve Crossman at Communications Specialties in Erie PA, collect. The units were shipped via UPS that day and on September 27 at 6:30 pm, my 350-XL was back on the air at my QTH. Not only was the rig repaired, but it was updated with the latest modifications, all for no cost or shipping charges.

I can't praise all of the personnel at Atlas too much, as they are not only gracious, but helpful to the nth degree. Atlas Radio is setting a precedent and building up a reputation that is going to be hard to beat.

Now, a few words about *73*. It's in a class by itself. Were it not for *73*, K2QHI would have been relegated to "appliance-operator" status a long time ago, but the plethora of construction articles keeps my hands busy and my soldering irons hot. Keep up the good work, Wayne.

Michael Stefanik K2QHI
Garfield NJ

WHICH MAGAZINE?

After reading the letters in a few of the past issues, I feel compelled to write in answer. I have subscribed to both *73* and *QST* for the past three years, and wish to ask (and answer) a few questions about these publications:

In which magazine can you find the most useful articles, divergent points of view, letters printed on both sides of a question, letters attacking the magazine as well as praising it? In *73*. In which will you find a publishing philosophy which accepts opposing points of view, which screens its advertisers for reliability, which will accept letters proposing almost anything? In *73*. In which will you find editorials which most likely are representative of a majority of its readers, if not of amateurs in general, and which doesn't "flip-flop" on the issues? In *73*.

In which will you find a multitude of column inches devoted to relatively useless columns, and claims of representation of the amateur while trumpeting nonrepresentative views? In *QST*. In which will you find the most apologies for a bumbling FCC, and the most "official reportage" with the least member input? In *QST*. Which magazine can usually be relied upon to review a "new" product long after it has been on the market, or to fail to reply to a proposal or letter? *QST*.

I don't for a moment begrudge these fellow amateurs their opinions, and I applaud your printing of them, but I just can't figure out what's so great about the League. It has its good points, just as *73* has its bad points, but on the balance, I'll take *73* anytime.

R. J. Edmunds WB2BJH
Kinnelon NJ

QTHING

For many years I have been thinking of writing to the various amateur magazines on the following subject, but kept putting it off. However, I'm finally getting around to it.

I have been on the air about fifty years. During that time, when I called a CQ, I have always given my location (QTH) since I felt many amateurs wanted to know where the call was coming from, and there is always the chance they might have phone-patch traffic for my location.

Back in the old days, when someone signed W1, W2, W3, etc., one always had a general idea of his location, but with the complete jumble in call assignments by the FCC recently, one does not know if the call is from their next-door neighbor or from Timbuktu.

I would like to suggest that a movement be started by the various magazines to have

Continued on page 116

The Lunch Counter

—eat it up

Johnny C. Chestnut WA4PIN
801 N. Ramona Avenue
Indialantic FL 32903

John L. Wolcott W4CCX
490 E. Riviera Blvd.
Indialantic FL 32903

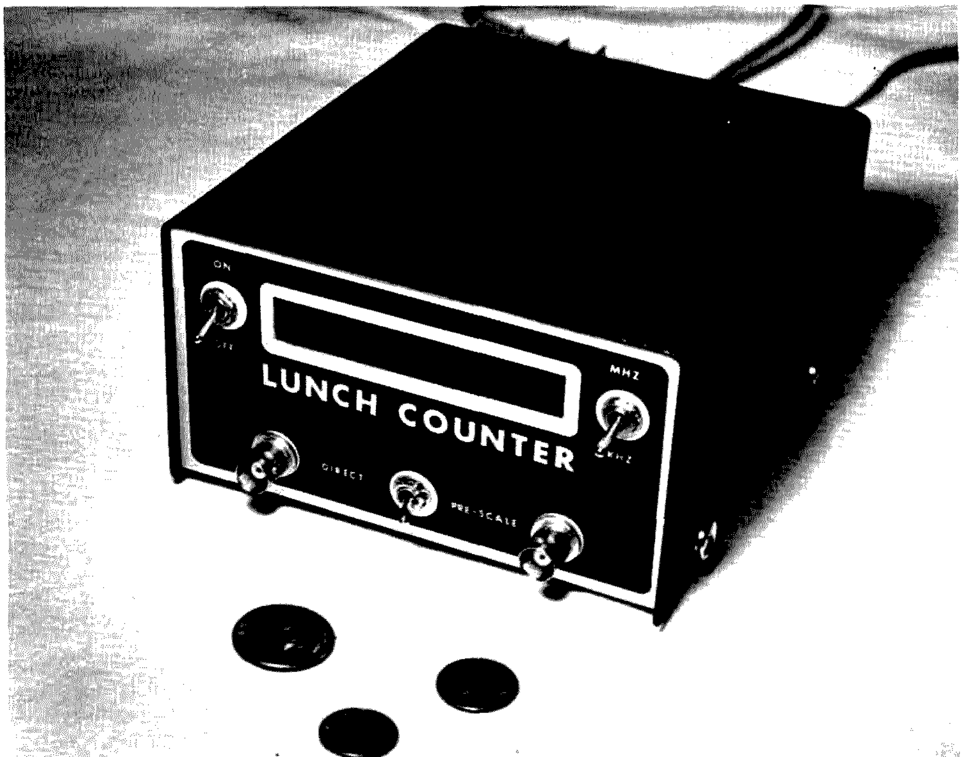

The finished Lunch Counter.

The Lunch Counter project was designed, from start to finish, as a ham project with ham specifications. Its primary goals were that it:

1) be technically up to date;
2) be easy to build;
3) use readily-obtainable parts; and
4) involve easy case fabrication.

As you may have already surmised from the name, the entire project was conceived and designed during a series of eyeball QSOs over lunch. A few evenings were used to build the prototype.

All of the participants work in electronics in some capacity, but none of the work was done within our respective fields of expertise. As an example, we elected our professional program manager to be the prototype technician, on the theory that the experience would be good for him. While only two of us wrote this article, acknowledgement is given to WA4QGE for mechanical design, WB4GDP for

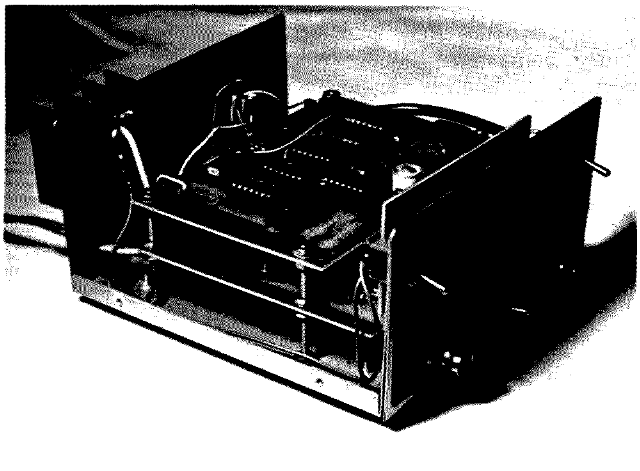

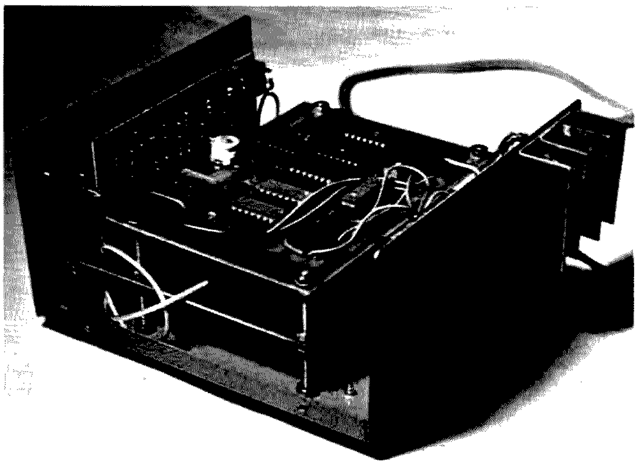

Interior views showing construction details and PC board mounting.

layout and drafting, and WB4UDI and WB4WWI for parts procurement.

We made a detailed evaluation of advertisements for available frequency counters. It soon became obvious that the art of digital frequency counters has progressed remarkably in the past few years as the newer integrated circuits have become available. As the semiconductor wizards pack more circuitry into an integrated circuit, the overall size goes down, the device capability goes up, and, best of all, the cost goes down. After all frequency counter ads and construction articles were reviewed and summarized, our appetites demanded the best features from each, and, of course, no one counter met all our desires.

Specifications

At this point, we developed a target specification which would satisfy all of us.

1) Cost—cheap, to fit a ham's pocketbook.
2) Display—six digits, big enough to read.
3) Frequency range—from audio (touchtone™ pads) through all the popular amateur bands (1.8 MHz to 450 MHz).
4) Sensitivity—sufficient for most solid-state rigs, but not sensitive enough to produce unnecessary counting on noise (10 mV to 25 mV).
5) Accuracy—±10 Hz to ±100 Hz is usually fine for most amateur purposes. A good quality crystal can be adjusted to better than 10 parts per million and will easily meet these criteria.
6) Stability—stable over the temperature range encountered in the ham shack. We did not expect to use it outside of normal room temperatures. Long-term stability should be good enough to maintain accuracy between calibration checks, which are six months to one year for most users.
7) Size—small enough to fit in the palm of the hand, but large enough to have an easy-to-use front panel.
8) Power—12 V dc was the choice of most of us who participated in the development. Most new solid-state rigs operate on 12 V dc, and a 110 V ac power supply is easy to build for those who desire it.

Design

The design that evolved over many lunch hours is shown in the block diagram in Fig. 1. The circuit was divided into three functional boards—timing, counter, and display. The timing board contains the oscillator, dividers, and timing to control the counter board. The counter board contains the six decade counters, latches, and seven-segment display drivers. In addition, it has the input amplifiers and high-frequency prescaler. The display board holds the six LED displays. Power requirements are met by the use of a three-terminal regulator to obtain 5 V dc from an 8-16 V dc supply.

Schematic details began with the selection of the 74C925 as the workhorse of the counter. This is a new counter chip which has a full four stages of counter built in with the necessary latch, seven-segment decoders, and LED drivers. It also multiplexes the output drivers, thus greatly simplifying the wiring to the displays. Comparing this single 16-pin integrated circuit to an equivalent set of conventional four-digit TTL counters, twelve integrated circuits, twenty-eight resistors, and twenty-eight wires to the display are now replaced with one integrated circuit, seven resistors, four transistors, and eleven wires to the display board.

Since the design criteria called for a six-digit counter, two more stages must be added. By using 74LS90 counters for these stages, the frequency range of the basic counter

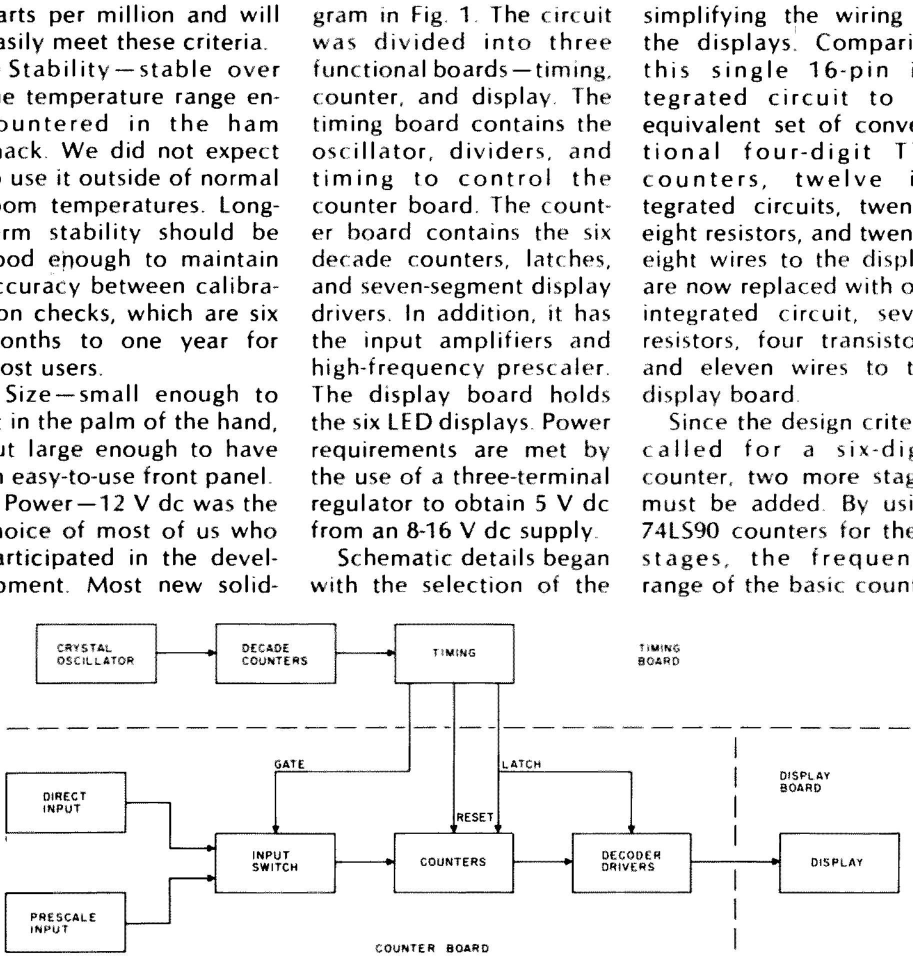

Fig. 1. Lunch Counter block diagram.

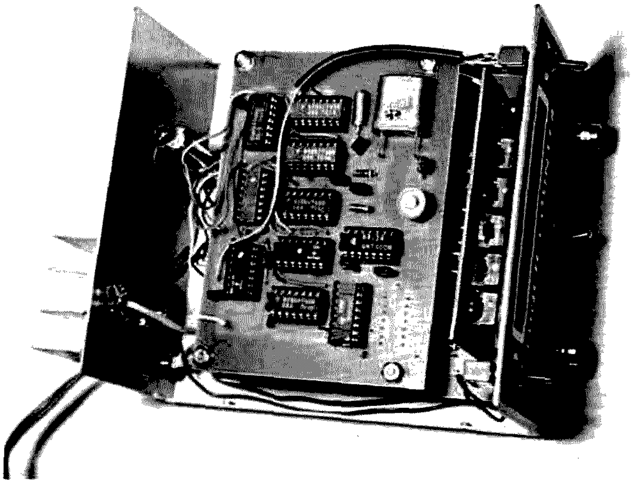

Top view showing parts layout of timing board.

will cover to 50 MHz. The associated latch and decoder/LED drivers for these two stages use 9368s. This device saves a couple of integrated circuits by combining the latch, decoding, and driving functions, but the resistors and wiring to the LEDs are cumbersome when compared to the multiplexed 74C925. It must be noted that the digit "9" on the 9368 and the 74C925 are decoded differently.

The input stages to the counter are either the amplifier, for direct input, or the divide-by-10 prescaler. A front panel switch is used to select the direct input or the prescaler through a 74LS00 gate so that the high-frequency signal path is always from one integrated circuit to the next. The DIRECT/PRE-SCALE switch only switches a dc control voltage. The 11C90 prescaler was selected because its frequency range exceeds 500 MHz. It also has the ECL-to-TTL conversion built in and therefore does not require additional transistors for level conversion. The prescaler divides the high-frequency input by 10, so its output is within the 50-MHz range of the basic counter. In this process, the last digit is dropped from the count, and the decimal point is therefore moved one place to the right.

The function of the timing board is to generate the timebase and control functions for the counter. An accurate gate is required which will allow the counter to count its input for a known period. The counter uses either a one-second gate for kilohertz or a one-millisecond gate for megahertz. The timing board also provides latch and reset pulses to update the display. The latch pulse updates the display with the previous count, and the reset pulse clears the counters prior to starting a new count.

Our original design used a 1.3-MHz crystal because we already had a few available. The first stage following the oscillator was a 74L193 programmed to divide by 13. After we completed the printed circuit board artwork, the plan to make the Lunch Counter into a club project developed. At this point, we modified the artwork to permit the use of a more readily available 1.0-MHz crystal as an option.

The power supply is simply a 3-terminal regulator bolted to the rear of the chassis with the bypass capacitors soldered directly to the terminals and a solder lug under the mounting screw. We used a small heat sink to reduce the regulator temperature, but several have been built using just the chassis for a heat sink with good results.

A parts list for the Lunch Counter is included with this article. The parts are easily available through advertisers listed in any of the ham radio magazines, such as *73*. The 11C90 and 74C925 are the most expensive parts and the 9368s come in a close third.

Construction

Construction is very straightforward. Printed circuit board assembly should be started with the jumpers on the component side, followed by the integrated circuit sockets, and then the remaining components. The display board is mated to the counter board with cutoff resistor leads or bits of hookup wire bent at a right angle. Both boards may be mounted in the cabinet with long bolts and standoffs. Wiring between boards, the switches, inputs, and power supply completes the wiring. The boards are then mounted in the cabinet and the LEDs lined up with the window.

The case is widely available through Radio Shack stores. A silk-screened front panel gives the unit a professional appearance and makes the construction easy. Cutting the rectangular hole in the front panel may be the most difficult part for some builders. A nibbling tool

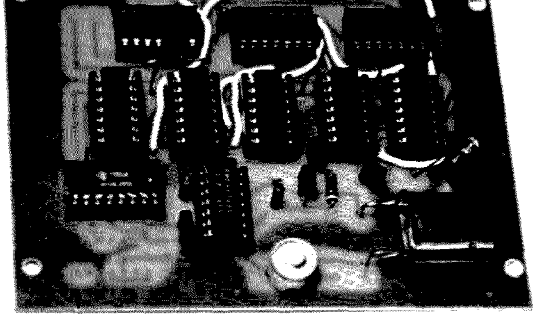

Timing board — component side.

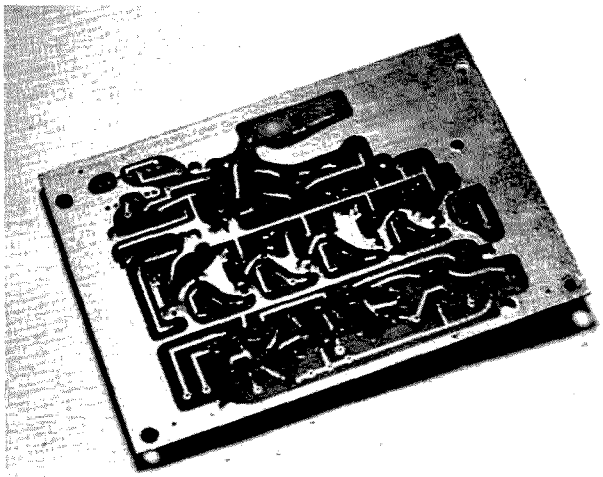

Timing board — foil side.

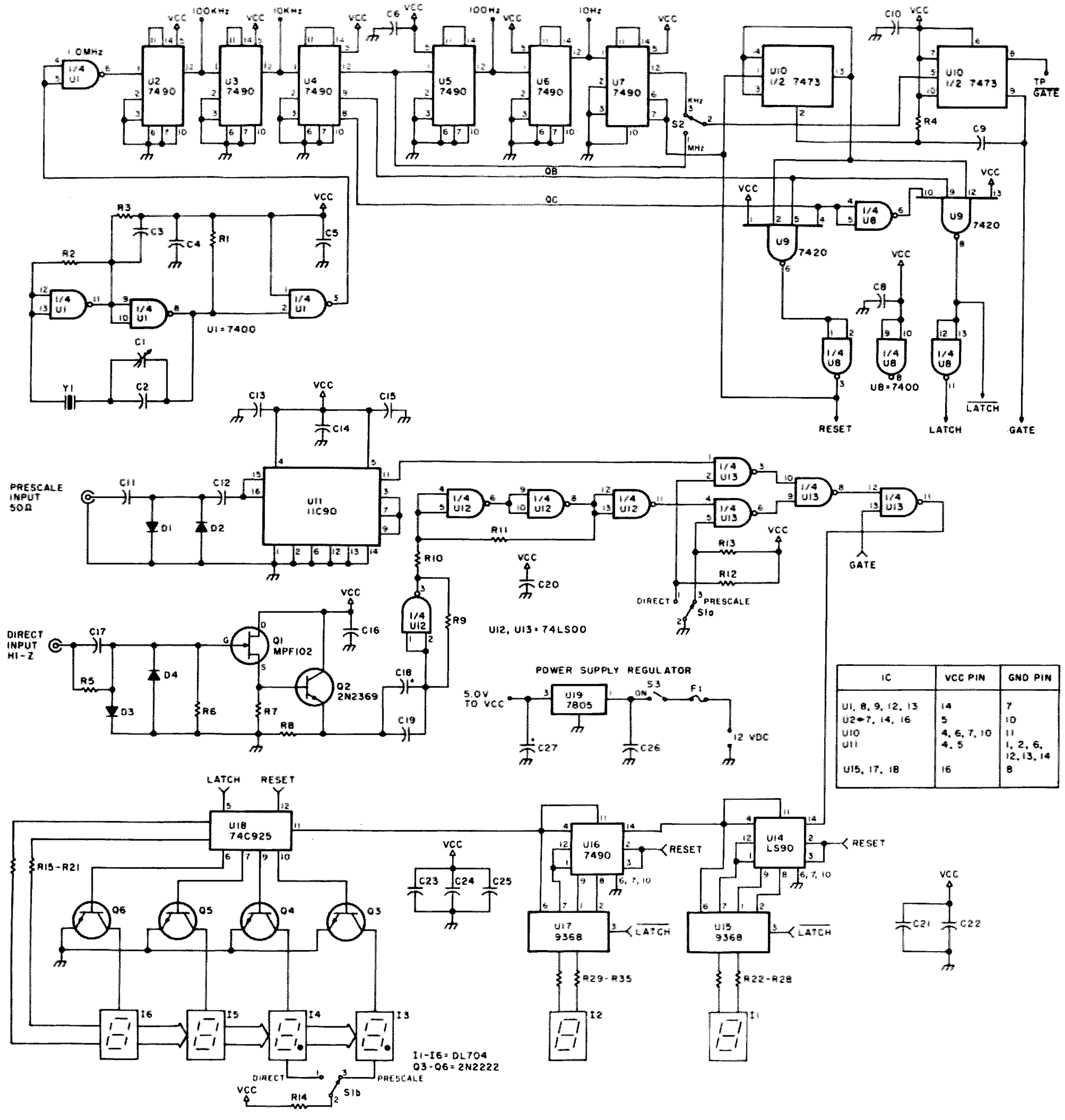

IC	VCC PIN	GND PIN
U1, 8, 9, 12, 13	14	7
U2→7, 14, 16	5	10
U10	4, 6, 7, 10	11
U11	4, 5	1, 2, 6, 12, 13, 14
U15, 17, 18	16	8

Fig. 2. Schematic.

does a good job on this hole. Some of us used a Dremel tool to cut out the hole. We then glued a red piece of Plexiglas™ to the back side of the hole.

Suggested Wiring Sequence

1. Jumpers under sockets —10 total.
2. Sockets—remove unused pins from display sockets.
3. All other on-board jumpers.
4. All other components.
5. Mount display board to counter board.
6. Wiring between boards.
7. Mount front panel on cabinet; drill holes and cut window.
8. Mount PC boards in cabinet.
9. Complete mechanical assembly.
10. Complete wiring.

Calibration

The only alignment required is to put the oscillator exactly on frequency. We made provisions for a fixed padder (C2) in parallel with the trimmer (C1) to be used if necessary. If the oscillator adjusts to the exact frequency with the trimmer alone, C2 is not needed. If the oscillator frequency is too high with the trimmer, C1, fully meshed, C2 should be added to lower the frequency. Note that a low oscillator frequency will result in a high count when using the frequency counter. The most accurate alignment method is to use the counter to count a known laboratory frequency standard. A frequency above 10 MHz is preferred to obtain the best accuracy. Alternate calibration

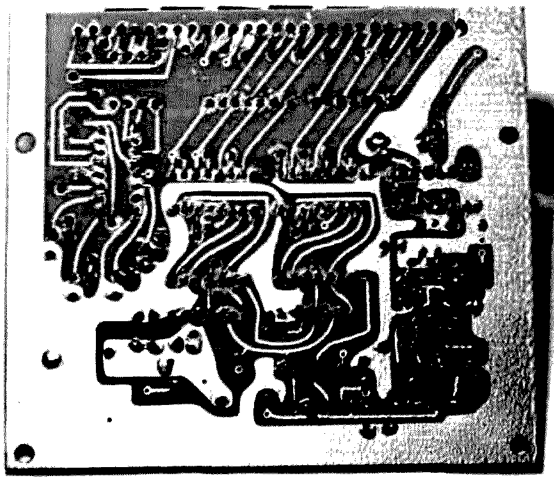

Counter board — foil side.

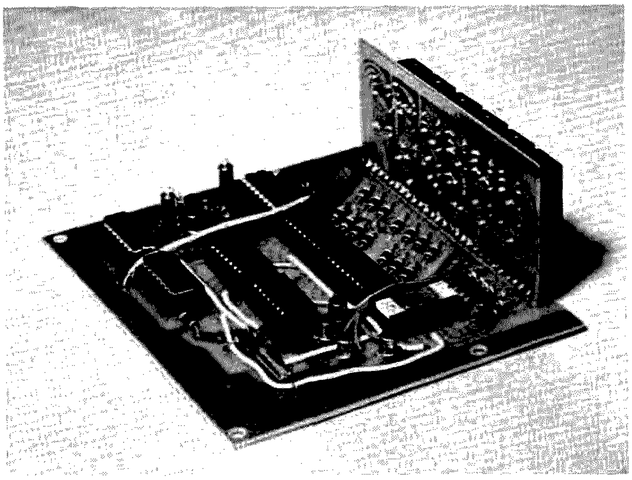

Counter and display boards showing parts layout.

sources would be a 100-kHz crystal calibrator or an oscillator zero beat to WWV. Also, there have been several magazine articles on using the TV color burst frequency as an accurate standard.

Troubleshooting

The counter should read all zeros (the last digit may read 1) with no input signal. If it does not, the following sequence of troubleshooting is suggested:

1. Double check all jumpers and wiring.
2. Check for 5 V dc on each IC as per pin connection table on the schematic.
3. If individual segments of one or more LEDs do not light, check the display by interchanging LEDs, and check wiring and solder joints on the display and counter boards.
4. If one LED does not light, check the corresponding driver IC and/or transistor.
5. If the display lights but does not reset, check the following:
   a. Check the oscillator by connecting a scope to pin 6 of U1. You should see a 1-MHz square wave.
   b. Check the GATE pulse by connecting a scope to pin 9 of U10. You should see a 1-ms square pulse (MHz-kHz switch in MHz).
   c. Check the LATCH pulse by connecting a scope to pin 11 of U8. You should see a 0.1-ms square pulse every 2 ms.
   d. Check the RESET pulse by connecting a scope to pin 3 of U8. It should look exactly like the LATCH pulse.
   e. Check for correct GATE, LATCH, $\overline{\text{LATCH}}$, and RESET pulses on LC2.
6. If the display lights but does not count, check the following:
   a. Connect the 100-kHz test point to the DIRECT input. Put the DIRECT/PRE-SCALE switch in DIRECT and check for a 100-kHz square wave at pin 4 and pin 11 of U13. The display should read 000.100 with the MHz-kHz switch in MHz.
   b. Move the input signal to the PRE-SCALE input, put the DIRECT/PRE-SCALE switch in PRE-SCALE, and check for a 10-kHz square wave at pin 1 and pin 11 of U13.
   c. Check for a 10-kHz square wave at pin 14 of U14 and a 1-kHz square wave at pin 4 of U14.
   d. Check for a 1-kHz square wave at pin 14 of U16 and a 100-Hz square wave at pin 4 of U16.

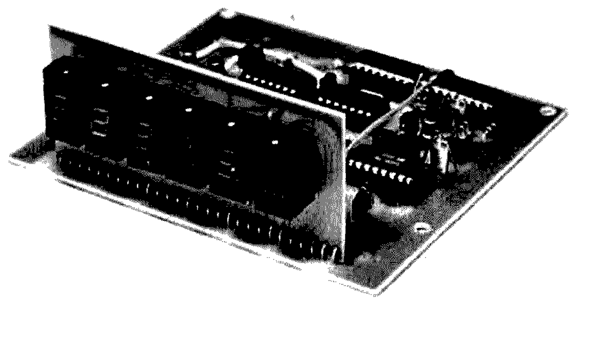

Display and counter boards showing LEDs and mounting technique.

Use

The direct input is generally used for frequencies under 50 MHz. The timebase switch may be set to either the MHz or kHz position. The decimal point on the readout is located after the third digit to correspond to MHz or kHz. In the kHz position, the least significant digit is 0.001 kHz or 1 Hz. When reading frequencies above 1 MHz, you can read to the nearest kHz in the MHz position, then switch to the kHz position and read the last three digits to the nearest Hertz.

Between 50 MHz and 500 MHz, you must use the prescaled input. The prescaler divides the input frequency by 10 and does not display the least significant digit. Therefore, the decimal point is moved one place to the right to properly index the display. By using the MHz/kHz switch, a prescaled frequency can be displayed to the nearest 10 Hertz.

Accuracy, temperature stability, and long-term drift of any counter are only as good as the crystal timebase. Most reasonably-accurate 1-MHz crystals can be trimmed to exactly 1 MHz with a little care, so the initial accuracy will depend on the facilities you have for calibration. Temperature stability and long-term drift depend on the crystal quality and the

oscillator circuit. In the counters we built, these two effects were less than 0.0005% over normal room temperature. After all, we did not intend to use the counter at temperatures where we do not function well. For greater stability, a high-quality crystal and oven can be used.

The sensitivity of the Lunch Counter was measured as 10 mV up to 50 Mhz in the direct mode and 50 mV up to 500 MHz in the prescale mode. This is sufficient to measure most transmitters using a short antenna on the input, without a direct connection. The most important caution is not to overcouple to the counter. Excessive input causes multiple counts and a reading much higher than expected. Of course, if you couple too much energy into the input, you can damage the input circuitry. Diodes are provided across the inputs to reduce this possibility.

As the word of our project spread through the local club, it was soon apparent that a counter was of universal interest. As a result, boards were made available, and more than 50 were constructed by members of the Platinum Coast Amateur Radio Society.

We had a lot of fun designing and building the Lunch Counter. We have met our goals of a simple-to-build counter with excellent specifications, and it has generated a lot of interest as a local club project. By using a good case and a good-looking front panel, any ham should be able to make a professional-looking piece of test equipment like the ones which are now indispensable in our shacks.

The three printed circuit boards, a 0.020-inch-thick aluminum silk-screened front panel with adhesive back, and documentation are available from Johnny Chestnut, 801 N. Ramona Avenue, Indialantic FL 32903, for $12.50 postpaid.■

Parts List

	Size	Quantity
Capacitors		
C1	10-60 pF trimmer	1
C17	100 pF	1
C9	0.001 uF ceramic disc	1
C3, C4, C11, C12, C15, C20, C22, C24	0.01 uF ceramic disc	8
C6, C7, C8, C10, C14, C16, C19, C21, C23	0.1 uF ceramic disc	9
C26	0.22 uF, 50 V	1
C27	1 uF, 10 V tantalum	1
C18	4.7 uF, 10 V tantalum	1
C5, C13, C25	10 uF, 10 V tantalum	3
C2	*Selected at test	1
Diodes		
D1-D4	1N4148	4
Displays		
I1-I6	DL-704	6
Transistors		
Q1	MPF-102	1
Q3-Q6	2N2222	4
Q2	2N2369	1
Resistors (all ¼-Watt)		
R15-R21	120 Ohms	7
R2	150 Ohms	1
R8	220 Ohms	1
R22-R35	390 Ohms	14
R9, R10, R14	470 Ohms	3
R1, R3	680 Ohms	2
R7, R12, R13	4.7k Ohms	3
R11	15k Ohms	1
R4	47k Ohms	1
R5	100k Ohms	1
R6	1.8 megohms	1
Switches		
S3	SPST	1
S2	SPDT	1
S1	DPDT	1
ICs		
U11	11C90	1
U1, U8	7400	2
U12, U13	74LS00	2
U9	7420	1
U10	7473	1
U2-U7, U16	7490	7
U14	74LS90	1
U18	74C925	1
U19	7805	1
U15, U17	9368	2
Crystal		
Y1	1 MHz, 0.001% tolerance, 30 pF parallel resonant	1
PC boards		
LC1	Clock and timing	1
LC2	Counter	1
LC3	Display	1
Miscellaneous		
Archer #270-253 (Radio Shack)	Cabinet	1
	RG-174	18"
	BNC panel connector	2
3¼" x ¾"	Red plastic window	1
	Test lead (BNC – alligator clips)	1
	Power cord and connector	1
	Strain relief	1
	14-pin DIP sockets	20
	16-pin DIP sockets	4
	#4 hardware	assorted
F1	Fuse and holder (1 Amp)	1

*C2 (silver mica) may be used if C1 is not sufficient to calibrate the crystal; otherwise it should be omitted (approximate value is 60 pF).

W2NSD/1 NEVER SAY DIE

editorial by Wayne Green

from page 4

Well, ARMA was in serious need of some activity which would be of benefit to the entire ham industry as a way of attracting members. They were formed to fight the linear amplifier nonsense, but this was of interest only to a few manufacturers, so ARMA meetings were small . . . very small.

Both as a rallying effort for ARMA and as a response to the threat of the 44 African nation black bloc which could well eliminate all amateur allocations at WARC, I convinced ARMA to try to support a mission to Africa. ARMA voted overwhelmingly to support the plan.

ARMA decided to put the job of writing the letter asking for support from both the industry and individual amateurs in the hands of two chaps from *Ham Radio* magazine. I expressed concern over this, for the ARRL/*HR* connection is hardly any secret. ARMA members seemed to feel that this was too important a matter to suffer any political shenanigans.

Unfortunately, it turned out that I was right again. Not only did the letter never get written (that was four months ago), but the promised piece in *HR Reports* asking for support also did not appear. *HR Reports* did print a short put-down of the idea and then later resorted to outright lies to try to back this up, saying that the ARMA directors had voted against the African plan.

Should we only lose a small part of our allocations, I hope that indignation will run high enough so amateurs will get busy and get some better ARRL directors elected and have them get an executive search firm to find someone with business background and a history of honesty to manage the League. Having this $5 million empire in the hands of incompetents is a crime which could very possibly lose us the whole ball of wax.

If we lose everything, then the problem will have been neatly solved. No amateur radio, no League, and some people will be on welfare at the general public expense instead of ours.

While I am writing about the League, I wonder if you knew that their Hartford convention last year ended up with a profit which went into the ARRL kitty. Some $3,000, I understand. Would this have been better invested in lower admission charges which might have encouraged younger hams to come to the show?

There has been some criticism of the board action to authorize the short-term borrowing of about a quarter million dollars to help pay the day-to-day League expenses. Despite record income, the ARRL has been racking up record losses. Instead of figuring out how to make their books better so they will sell more, they are responding by laying off people. Indeed, many of their best people have recently jumped ship . . . Dunkerly, the Whites, McCoy, etc. Laying off people will only empty some of those new and expensive offices they just built and are now trying to pay for.

Amateur radio is growing at a high rate and we see this in *73* in an increase in both subscriptions and advertising. The recent issues have been the largest in our history and we have been doing everything we can to get more people to work here, while ARRL has been firing their people.

We need people to work in our book department to prepare books for publication. Every time we get someone trained for this, the *73* staff grabs them to work on the magazine, leaving us shorthanded for book preparation again. We need people interested in marketing, advertising, drafting, a good technician to help test ham gear, layout and pasteup people, plus a lot more help with our microcomputer magazine and software plans. We are nearing a staff of 100 now and are projecting 200 by late next year and 300 in 1980.

If amateur radio should get killed, *73* would have to become an experimenter magazine and would undoubtedly shrink a lot. We don't know what the possibilities are for 180 kHz low-power communications . . . or

what might be developed in underground communications. Would amateurs shift to 11 meters and the HF band? The CB repeater band would get a good workout, for sure.

These are bad thoughts, so in general I agree with the ARRL leaders and their approach . . . "they *can't* kill amateur radio!" Keep thinking those happy thoughts.

With or without an amateur radio magazine, our microcomputer magazine will be continuing to grow. Plus, we have two more magazines in the works and the Instant Software project, so we will be growing in size even if amateur radio does disappear. Having been an avid ham for some 40 years, I'll sure hate to lose it. It's been a big part of my life.

During the last 40 years, I've talked with amateurs in well over 300 countries and visited them in almost 100. I've had fun with RTTY, NFM, SSTV, SSB, moonbounce, OSCAR, microwaves, repeaters, and a whole lot of rag chewing. I'll never forget the pileups I ran into from many rare spots or the thrill of pioneering new modes.

If things should go against us, how soon would the axe fall? As near as I can figure, even if we lost everything, it would take several years before we would actually be put off the air. We would still get a lot of action from our new rigs . . . and some of the newest stuff is fantastic. We would not be out of business until our government ratified the ITU agreement. With no lobby in Washington to express our concern over this matter, Congress might not waste too much time, particularly if the EIA were in there pushing against us. Yet even when Congress acts quickly, it can take years.

Can the U.S. simply drop out of the ITU? If amateurs lose frequencies, you can be sure that commercial and military interests will also lose them wholesale, so we won't be the only group burnt. How practical is it to consider trying to go it alone and not have to toady to the African countries? Well, we've been having the same problem with the U.N. and we haven't dropped out of that yet, no matter how miserable they make it. The ITU is a branch of the U.N., by the way. It seems unlikely that we would pull out, no matter how revolting the consequences.

So far I've had nothing but comments of agreement on my evaluation of the situation. I know the ARRL disagrees, but no one in the ARRL has come up with any good reasons for disagreeing. Others claim that I have been guilty of understating the seriousness of the situation. If anyone has any words of cheer, the pages of *73* are wide open. Let's know it if you have any data which changes the picture. We really need a change.

WHAT ABOUT NEXT YEAR?

While December is best known for offering us Christmas, a holiday to which I am not partial, it also includes, at no extra cost, New Year's Eve. Whee.

Since a birthday gets only a small celebration, it is not quite as traumatic as the New Year, where it is made clear that everything and everybody is now a year older. It is a time for introspection. Let's mull over amateur radio, putting the last year into perspective and seeing what we have going for us for 1979.

My recent experiences with the relatively simple 10.5-GHz rigs is indicative of some of the fun that lies in store for the adventurous. Bandwidth is not a problem at these frequencies, so we can use such microwave links for television, data transfer, or whatever we want to cook up. Of course, the sad fact that we have lost this incredible band for satellite use through blundering at Geneva is something we will have to live with as long as we have amateur radio. It didn't seem quite as important when there was nothing much available in equipment to use on these bands, and therefore they were of interest only to a tiny group of hams with machine shops and incredible patience. Now, with relatively simple and inexpensive equipment coming available, we will begin to feel the pinch and begin to really understand what has been lost . . . forever.

The sunspots have been coming back in spurts, just as our propagation editor said they would. Incidentally, Nelson was the *only* professional in this field to make such a prediction, so I'm sure he's sitting back with a smug look

Continued on page 246

Reader Service—see page 323.

Robert Villastrigo K5GNZ
309 Irvington
San Antonio TX 78209

Confessions of a Stripper

—confirmed junkor tells all

Which are you? The "junkee" is a collector of odds and ends, an impulse buyer, a pack rat — don't throw it away, you might be able to use it sometime. The "junkor" strips everything now and gets rid of the excess — if he can't use it, he throws it away — he can always get another one, the junk yard or surplus house is full of them.

If you are an experimenter, you probably fit into one of the categories. Articles about stripping surplus equipment are commonplace among the old issues of many magazines, articles on how to strip a TV set and get usable parts for the do-it-yourself projects, or stripping particular GI units easily acquired to obtain the necessary parts for a specific project. But every article assumes that you know what to do with the residue of the stripped unit after the project is complete, or that parts desired are removed. It's assumed that the "junk" will be thrown away. Don't do it. You can save yourself a little cash and also do your thing for ecology.

Stripping or junking is, in reality, an art form. I have seen salvage metal buyers who can handle a hammer and chisel like an experienced sculptor. The required removal of a frozen nut or bolt to separate a valuable piece of equipment from an indescribable or unworthy piece of metal requires talent if damage is to be negligible. In the first place, a professional cannot spend a lot of time in dismantling equipment. His time and profit margin isn't that much. His methods may be crude, but, when it counts, he has the delicate touch of an artist.

When removing the parts you desire for the project you have in mind, go one step further. Completely strip down the unit at the same time. This will keep storage problems from arising.

Lay out the tools you will need and have a seat. There are many ways to keep parts separated. It depends on how much stripping you intend to do. The cheap way is to gather a bunch of milk cartons. Cut them in half and wash them out. Use as many as you need.

A tool caddy is advisable, loaded with every tool imaginable. Stay away from unsoldering items when stripping. Save those until later when you are ready to use them. Cut them out with a pair of large diagonal pliers. A great time-saver is the use of nut-drivers, spintites, etc. These do not preclude the use of a socket set at times, but normally they will suffice in most cases when the nuts are securing terminal strips and/or transformers, tube sockets, and other nut-and-bolt secured items. Allen wrenches are a must for knobs and gear drives where needed. Nothing is more aggravating than being midway into a stripping project and finding a gear that is preventing the removal of an entire mechanism. All that's required is the correct Allen wrench . . . and you don't have it.

If the equipment being stripped is small, then the tool complement can follow in order. Electronic equipment tools used for dismantling and repairing equipment may be all that's necessary. If the equipment is large, additional tools may be required.

If the item is a piece designed strictly for military application, then there will be some specially designed screws, nuts, and bolts that should be removed with a hammer and chisel. Leave them until last. Even if you have the special tool, don't waste your time. You wouldn't want to use them in a project anyway.

Wiring harnesses do not serve any purpose unless you need hookup wire. Removing

the entire harness at one time is sometimes easier than removing and disconnecting each item as it is stripped. If the terminal strips and associated plugs are not wanted, then leave them connected and remove the entire wiring assembly by unscrewing, unbolting, and cutting. When this is out of the way, all other parts are easily accessible, and dismantling is much easier.

A reminder here about the removal of transformers: Trace the wiring and mark the connections before removing. Many will follow the standard color code of black for primary, red for secondary high voltage, red and yellow for center tap, and green for filament, but don't count on it. Some artistic devils can get hold of the design and color leads to look like modern art. Trace the wiring just to be sure before disconnecting the transformer. The same thing applies to any item that has more than two leads and depends on any type of color code for identification.

There are always some limitations each do-it-yourself technician places upon himself. It may be coil winding or some other technical item that requires special equipment or a lot of time to build and is easily acquired for a small sum of money at the local parts house. Another example is tube sockets. The common seven- and nine-pin sockets can be reused if you are willing to take the time to clean the individual pins after removal from the chassis being stripped.

The most usable items that you can remove in quantity will be the resistors and capacitors. You will never have enough of these items. The more you get, the more you find you will need. Removal of these items can be done rather speedily.

Where tube sockets and terminal strips are not important, a fast method of removal is to cut the tabs of the terminal strips and sockets instead of the resistor wires and capacitors. You can remove the solder and small piece of connection later. This also allows for further and faster stripping.

The junkee who saves everything needs a place to put it. If you are an organized junkee, pigeon holes, like these, are ideal. If not, it may take a month to find a particular item.

The junkee has arrived at his destination. All reusable parts have been removed and all that remains is a bunch of wire and assorted metal chassis bits and pieces. The junkor's turn is next. The junkor will take the same piece of equipment and spend just a few minutes and accomplish the same thing. He will get his desired part and either throw the rest away or store it for later use, or strip it to the point where a salvage metal buyer will accept it. There are many hobbyists who enjoy stripping as much as they do building. If that is your forte, then make it pay.

You must acquire a most important tool to keep with you at all times — a magnet. This will aid you no matter where you beg, borrow, buy, or steal your material. Separation of the different types of metal (copper, iron, steel, stainless steel, bronze, etc.) is a must. Also, to make it worthwhile, don't attempt to sell the metals until you have a sizable amount. Of course, it depends on the type of metal. Where ten pounds of clean copper wire may bring you four dollars, the same ten pounds of aluminum may bring one dollar and sixty cents ($1.60) at fifteen cents per pound. The prices may fluctuate from day to day, but usually not more than a few cents a pound, although prices for clean copper in past years has risen to over a dollar a pound and fallen back to as low as thirty cents a pound.

Clean metals will bring as much as 200 percent more than what are known as "dirty metals." Dirty metals are those that still have screws, bolts, rubber, weather stripping, or other materials which are still attached.

For speed, the hammer-and-chisel technique is used. The simplest way is to take the chisel and hold it with a pair of pliers. This eliminates split fingers, but it does not eliminate the tiny slivers of metal that occasionally fly from the head of the chisel. Gloves and a pair of safety goggles, if you don't wear glasses, should be used if you intend to do much chiseling.

When you have everything removed, check the metal with your little magnet. Anything it will stick to is iron and should be removed. This is the main purpose of the magnet. Of course, the magnet will not indicate the presence of brass or copper which should also be separated. Yellow-colored metal will indicate brass, while the reddish varieties are more likely copper. Stainless steel and lead also bring a nice scrap price.

You can throw away the tube sockets, crushed coils, resistors and capacitors not saved, and knobs (unless they have brass inserts). A smart blow from a hammer will crack away the outer plastic covering of the knob and leave a clean piece of brass. Don't expect much from your iron; that will be on the low end of the pay scale (two or three cents a pound). When you have accumulated thirty or forty pounds or more of copper, brass, aluminum, etc., you might be surprised at the price it will bring. Remember to keep it separated and free of iron.

One last reminder: Wire

must be completely clean of all insulation and attachments, including plugs, clips, brackets, etc. This, of course, is your highest paying metal, so extra care should be taken. In most states, the method of burning the insulation off the wire is forbidden due to the pollutants released by some electronic insulation, although this does not stop many illegal smelter operations and backyard burners. The backyard burners (barbecue pits) usually get away with it because of the small amount cleaned (ten to fifteen pounds) at a time.

The junkor should be aware of the copper content of television yokes, motors, and, last but not least, transformers. Average transformers with an open core winding will contain between thirteen and eighteen percent of the total weight in copper. Again, the easiest method of stripping a transformer is to burn it. If it's an enclosed transformer, remove the outer cover and throw it in the fire, if regulations permit. One alternative is to remove the wire by hand. This can be a difficult and time-consuming chore if it is an iron-core transformer with inserts shaped like the letter W. The easiest method is to saw through the inserts and slip them out, leaving the wire to be unraveled by hand.

There are many other ways to accomplish the same stripping procedures discussed in the preceding paragraphs, but whatever method you discover that's easiest for you to use, do it. Not only will you pocket a little extra cash, but a lot of that old metal will find its way back into circulation, and someday your efforts may be remembered as the only thing that saved the beer can.

May you chisel your way to glory. ■

LETTERS

from page 102

everyone give their QTH as well as their callsign. I'm sure most of the old-timers feel the same way.

Russell A. Garlin W5UKA
Albuquerque NM

MORE MICODER MODS

Re the Micoder™ articles in the July, 1978 (page 90 by K3MPJ), and August, 1978 (page 168 by W4CUG), issues of *73*:

Getting rid of the 555 timers for tone generation is easier than building a PC board and buying all the parts, that is, unless you have a well-stocked junk box. Heath has a kit to make the Micoder into a Micoder II. It is not very expensive and includes all the parts. It uses the Mostek chip and TV color crystal.

Also, to get rid of the 9-volt battery, which just doesn't last very long at all, I did it a little more easily than K3MPJ. Unless they have changed the coiled cord in later models, it contains an extra black wire. It is connected to ground at each end with the shield. I used the same zener setup that MPJ did, except I put the zener and resistor where the cord comes into the radio and used the extra black wire for the power conductor. There was no change in the fine audio quality of the Micoder or 2036. As a side benefit, the Micoder is somewhat lighter without the battery.

I hope this will be of interest to others who might want to make these modifications.

Oscar A. Hoyt III K5UBS
Dallas TX

JAPANESE JACKPOT

Japanese folklore says that there is a jackpot day in each month. The day I find *73 Magazine* in the mail box is the day for me.

I especially liked your article "Radio Row Revisited" in the past August issue. I would like to make an addition to Brad's statement that "a large portion of the gear on display here is aimed at the lucrative Japanese Novice market: ten Watts maximum, phone only, 80, 40, 15, and 10 meters and VHF."

The Japanese version of the FCC has regulations applicable to four different amateur radio licenses.

1. Novice: Bands and modes same as the regulations.
2. Telegraph class: Same as Novice plus CW.
3. Second class: 3-500Z x 2, maximum.
4. First class: Henry 4K-Ultra, and up.

I have never seen a ten-Watt rig, except at a ham shop display, and in my own shack when I was a Novice.

Mitch H. Ono JF3JKK
Otsu City, Japan

WONDERFUL RESPONSE

About a year ago our club asked you for a donation for our first club raffle. The response was wonderful and the raffle became a great success. Our goal was modest: $200 for the treasury. We surpassed that with your help.

As a club sponsored by the Nassau County Department of Parks and Recreation, we do not charge any membership dues or fees. The modest treasury helps keep us on the air, and in postage. We are not asking for a hand again, but we may do so in the future.

Please pass on the word that students are always welcome in our Novice and General/Advanced classes each Monday at 7:30 pm.

Gene Blanck
East Meadow NY

Corrections

It was called to my attention that one reader thought that there was the possibility of eye damage from the use of the Instant Engraving system described in the July issue (Letters, September, 1978, p. 127). He cites the fact that carbon arc lights are used to generate ultraviolet radiation for use in exposing photosensitive materials. Of course, some form of eye protection is to be used under those conditions. The key words are carbon *arc*.

Please note the third column on page 59 (July, 1978), ". . . the voltage should be kept below the point where an arc can be struck and maintained." Photo D shows the rod glowing from simple I^2R heating, not the veritable inferno contained in an arc. The light given off during the engraving process should be no more or less harmful than that of any other incandescent light of similar light value. As in any incandescent light source, a considerable amount of energy is dissipated in the form of heat, with only a small portion used to generate visible or invisible radiation.

I regret any confusion that there may have been concerning the above point.

Evert Fruitman W7RXV
Phoenix AZ

Please note a correction to my article "Triple Threat," which appeared in your October issue. On page 133, line 2, column 2 should read "leled phono or phono".

Ralph E. Delligatti K3CMY
Gaithersburg MD

Ham Help

I would like to know if anyone knows of a commercially run school which a person can attend in order to learn how to obtain an amateur radio license.

Carl M. Sullivan
RR 24, Box 383
Terre Haute IN 47802

I need a schematic and/or manual for the Harris-Interdata COPE 1035 Selectric-based terminal. I will pay for photocopy and shipping.

Jeff Duntemann WB9MQY
6208 N. Campbell Ave.
Chicago IL 60659

William R. Stocking WØVM
1030 Weidman Road
Manchester MO 63011

Tuned Feeders and Other Good Stuff

—who needs coax?

As you know, other things being equal, the success of your amateur radio station depends upon the quality of its antennas. Is your antenna a coax-fed dipole? If so, why? Is it because it is the easiest kind of antenna to put up and get on the air with? Is it because it can be brought into the house through one small hole? Is it because other kinds of antennas seem complicated and difficult to understand?[1]

"Vertical zepp" antenna for 20 meter CW.

From on-the-air descriptions of antennas, one gets the impression that most amateurs feed their antennas with coax. This was not always so. Before coax existed, amateur operators designed and built excellent antennas using open-wire tuned feeders. Some antennas used no feeders at all.

The purpose of this article is to present some "antenna axioms" along with some basic antenna theory and to explain how to use these ideas to build effective antennas that are not fed with coax. (Coax is used only between the transmitter and the antenna tuner.) Building and experimenting with antennas is fun and good experience.

Antenna Axioms

1. The antenna system should be resonant at the frequency being used.
2. The rf from the transmitter must be effectively put into the antenna.
3. "There is no substitute for height." The higher the antenna, the better. The high-current part (or parts) of the antenna should be as high as possible.
4. Other things being equal, full-length antennas work better than do shorter antennas that have been made "electrically longer" by means of "loading coils."
5. Quarter-wavelength vertical antennas use a good ground or group of quarter-wavelength radials for the other half of the antenna. Radials buried in the ground are often used. The greater the number of radials, the better the antenna works. At easy-to-attain heights, vertical antennas have a lower angle of radiation than do horizontal antennas. This makes them good for DX.
6. The transmitter's harmonics should be prevented from getting into the antenna.

Basic Antenna Theory and Applications

A half-wave resonant antenna has high voltage rf on its ends and high rf current in its center. (See Fig. 1.) The antenna can be fed rf voltage at one end, or it can be fed rf current in its center. (A half-wave antenna fed in its center by coax is a current-fed antenna.) An antenna can be voltage-fed by bringing one end into the shack and connecting it to a parallel-tuned "antenna tank" tuner

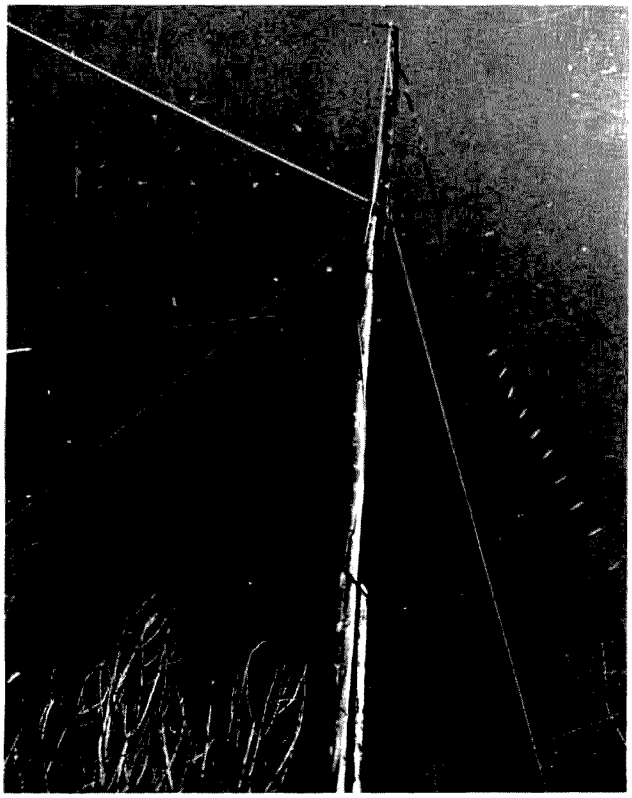

Tuned doublet antenna 66 feet either side of center.

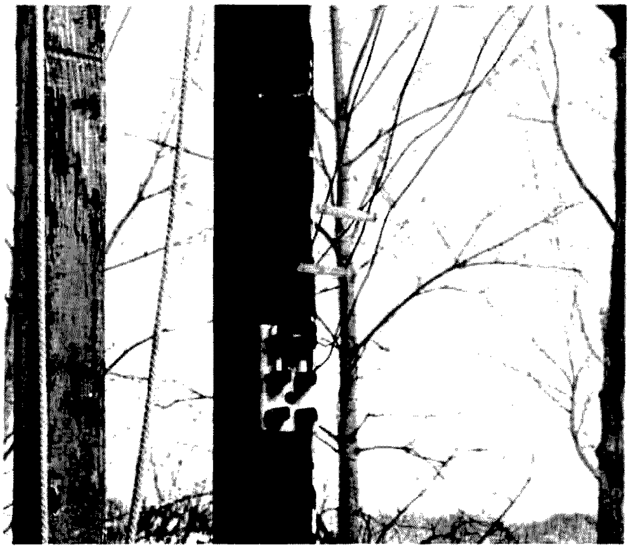

Antenna grounding switch on tuned doublet's feeders. The switch is in place for use on the air.

which is link-coupled to the transmitter. The tuner is composed of a coil and variable capacitor which will tune to the frequency of the transmitter. The rotating plates of the variable capacitor are connected to ground. The stator plates will be "hot" with rf voltage, and the end of the antenna is connected to the stator plates. One side of a neon tube is connected to the antenna to indicate the presence of rf voltage when the coil is tuned to resonance. (See Fig. 2.) The antenna should go out from the shack and be strung up as high as possible. (The length of a resonant half-wave antenna is found by applying the formula: Length in feet = 468/frequency in megahertz.) If the antenna length is for one of the lower frequency amateur bands, it can be used on its harmonics for the higher frequency bands. (An antenna 132 feet long, for use on the 3.5 MHz band, will also work on 7 MHz, 14 MHz, 21 MHz, and 28 MHz by tuning the antenna tuner to these higher frequencies. Plug-in coils can be used for the various bands.)

An antenna may be current-fed if the center of the antenna is brought into the shack. In this case, the coil and variable capacitor are connected in series with each other and in series with the rf "center ends" of the antenna. (See Fig. 3.) This kind of antenna can be conveniently used if the shack is on the second floor of a house. One half of the antenna can be vertical and the other half of the antenna can slant down and out. (Two-by-fours, or furring strips screwed together with a long bamboo fishpole on top, make a good support for a vertical wire.) This kind of antenna illustrates the principle of series tuning for rf current. The endfed antenna utilizes the principle of parallel tuning for rf voltage.

When an endfed antenna is used on its harmonics, provision can be made for lengthening the antenna inside the shack to make it work better on the harmonics.[2]

It is good to have your antenna as high and in the clear as possible. For this, a means of feeding the rf to the antenna through wires is necessary. (See Axioms 2 and 3.) There are several kinds of wire transmission lines that can be used. The most efficient transmission line is the open-wire type. (Efficient means with the least loss per hundred feet of line.) Next most efficient is the transmitter-type twinlead. After this are the other kinds of twinlead (TV twinlead). The least efficient transmission lines are the small-diameter coaxial cables such as the RG-58/U and the RG-59/U.[3]

Before coax was available, zeppelin-type ("zepp") tuned feeders were often used to take the rf from the shack to the

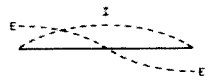

Fig. 1. Rf voltage and current distribution of a half-wave resonant antenna.

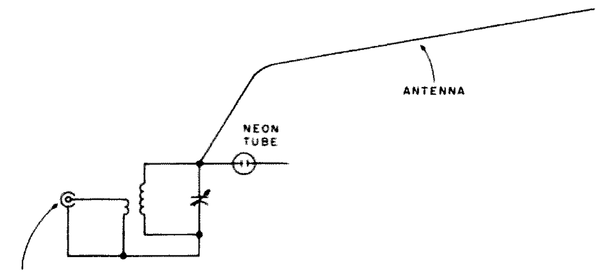

Fig. 2. Feeding rf voltage to the end of a resonant antenna (parallel-tuned coil to give rf voltage).

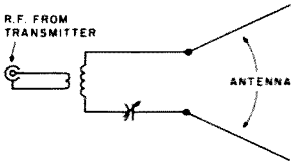

Fig. 3. Feeding rf current into the center of a half-wave resonant antenna (series tuning for rf current).

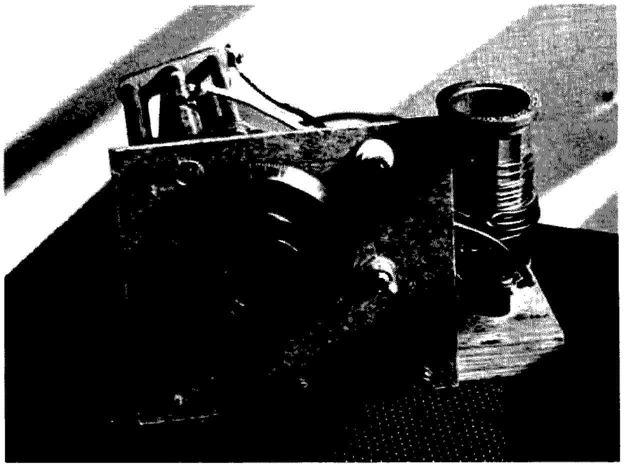

"Single-ended" antenna tank tuner for endfed (voltage) antennas (switch for transmitter or receiver, etc.).

antenna. The "zepp" antenna consisted of a resonant antenna that was fed by an antenna that was a half-wavelength long, folded back on itself, and fed rf current. In the case of a dirigible or zeppelin, the antenna was suspended below the airship, as in Fig. 4. When used in an amateur radio station, the tuned feeders go up from the shack to the end of the antenna. (See Fig. 12.) Electrically, the tuned feeders are an antenna folded back on itself, and one end of the tuned feedline is connected to one end of the antenna. The other end of the feedline is not connected to anything, except, of course, the insulators that support it. There is no rf radiated from the tuned feeders because the rf field of one feeder cancels the rf field of the other feeder. The length of the zepp antenna itself should be 5% longer than 468/f(mHz) because of "end effects."[4]

The "tuned doublet" is another type of antenna that uses tuned feeders.[5] This antenna is better balanced than the zepp because both ends of the tuned feeders are connected to the antenna, each to the same length of wire. (See Fig. 5.) The tuned doublet can be used on harmonics of its fundamental length. Furthermore, it has a gain of about 1.9 dB at right angles to the antenna when it is tuned to its second harmonic. The antenna also has some gain, as compared to a dipole, when it is used on higher harmonics at angles less than 90 degrees from the antenna. If the station can have only one antenna, a tuned doublet would be an excellent allband antenna. Cut for the lowest frequency band to be used, it would be operated on its harmonics for the higher frequency bands.[6] An excellent tuned doublet antenna 66 feet either side of 65-foot open-wire tuned feeders was used in several field day contests. It worked well on 80, 40, 20, and 15 meters. (It was not tried on 10 meters, but probably would have worked there, also.[7])

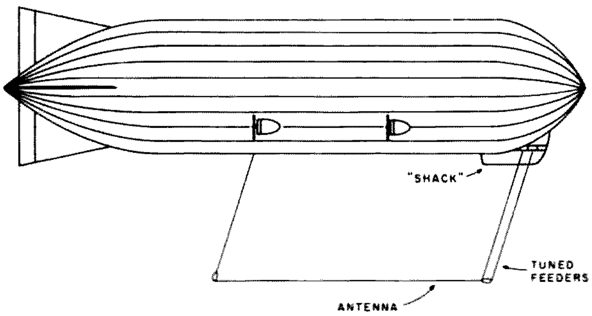

Fig. 4. The original "zepp" antenna.

Antenna Tuners

A tuned feeder antenna system requires an antenna tuner between the transmitter and the tuned feeders.[8] The most simple antenna tuner for balanced tuned feeders consists of a coil tuned by a split-stator variable capacitor, link-coupled to the output of the transmitter. The feeders are connected to the stator plates of the variable capacitor. (See Fig. 6.) The coil and capacitor should be of such values as may be tuned to the transmitter's frequency. (Plug-in coils can be used to change bands.) This tuner works well if the length of the antenna and its feeders is such that the ends of the feeders in the shack should be fed rf voltage. However, with other feeder lengths, variable capacitors must be placed in series with the feeders, and you have the tuner of Fig. 7. Since tuned feeders are of the same length (balanced), the series-variable capacitors are ganged together and tuned with one dial. (These capacitors must be electrically insulated from each other when ganged.) This tuner (with plug-in coils for changing bands) makes possible the use of tuned feeders of practically any convenient length. A neon tube connected to one stator of the split-stator variable capacitor (or leaning against one or both of them) helps in the initial tune-up of the antenna system. A field strength meter located not near the antenna tuner should be used, and the antenna system tuned for the greatest field strength indication.

With this antenna tuner, an swr meter connected between the transmitter and the antenna tuner may show a rather high swr, but, when the field strength meter shows the highest reading, the swr will be the lowest. The use of coax-fed antennas and the limited impedance output range of many transmitters have made amateurs worry about swr, and nearly all hams use swr meters. To reduce the swr between the transmitter and the antenna tuner, a large variable capacitor can be added in series with the primary coil of the tuner.[9] This enables the operator to obtain a very low swr reading, if this is necessary to make either him or his transmitter happy. (See Fig. 8.) This tuner worked so well on field days that one of the field day operators called it the "old reliable" antenna tuner. (This was even before the variable capacitor was added in series with the primary.) In the "old reliable" tuner, a two-turn coil made of number 12 house-wiring wire is used for the primary. This wire is stiff enough to hold itself in place. The primary coil's diameter is larger than that of the plug-in coils, and these coils are plugged in right through the primary coil. (See Fig. 9 and photograph.) Another tuner has plug-in coils with

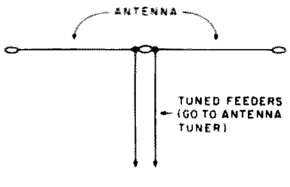

Fig. 5. Centerfed tuned doublet antenna (often incorrectly called a "centerfed zepp").

a separate primary for each secondary. This tuner works well, but the swr is not quite as low as with the "old reliable" antenna tuner.

This type of tuner, especially if built with junk box or scrounged parts, is inexpensive but effective. Some other tuners such as the DenTron Super Tuner™ ($129.50) or the Universal Transmatch of the ARRL *Antenna Book* work well with tuned feeder antenna systems, but the "old reliable" tuner does it with a lower swr.

Some amateurs may object to having to adjust the three dials on the antenna tuner. In practice, after C2 and C3, on one dial, and C4 are adjusted, only C1 must be readjusted when moving from one part of a band to another.

The drawings and diagrams in Figs. 10 through 17 show the dimensions and arrangements of a few non-coax-fed antennas.

Many other tuned feeder antenna systems can be designed. Use your thinking and imagination. Although open-wire feedline is the best kind to use, good quality 300-Ohm twinlead works very well. It can be brought into the house under a window without having to drill holes.

For lightning protection, provision should be made for grounding the feedline outside of the house when the antenna is not in use.

A balanced feeder antenna tuner such as the "old reliable" will work as the series tuner for the "center of the antenna in the shack" arrangement by opening out the plates of the split stator variable capacitor and tuning with the ganged series-variable capacitors. This kind of tuner can also be used for voltage feeding the end of an antenna in the shack. Short out one of the split stator variable capacitors and connect the antenna to the stator plates of the other side of the variable capacitor. A neon tube, one side of which is connected to the antenna, will indicate the rf voltage when the coil is tuned to resonance at the transmitter's frequency.

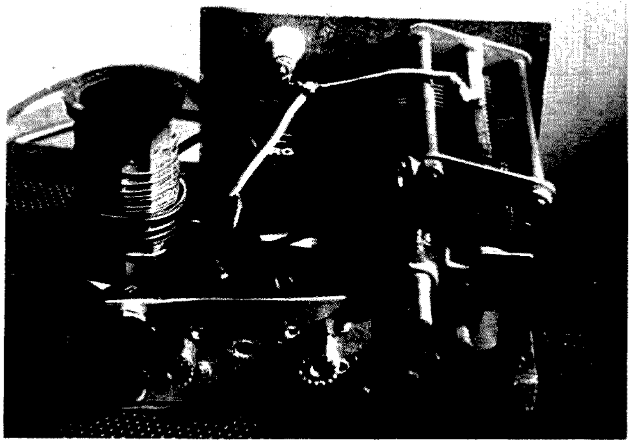

Back view of single-ended voltage-fed tuner. This shows two coax connectors switched from the front.

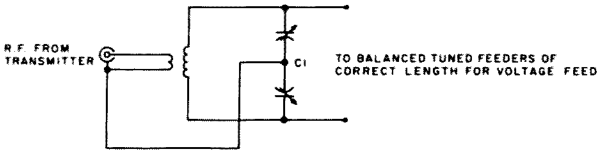

Fig. 6. Antenna tuner to voltage-fed balanced tuned feeders.

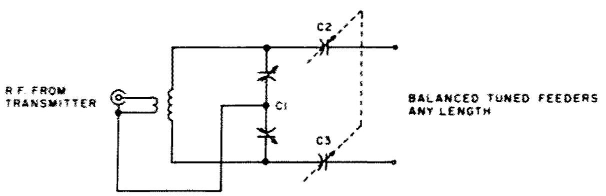

Fig. 7. Antenna tuner for balanced tuned feeders any length.

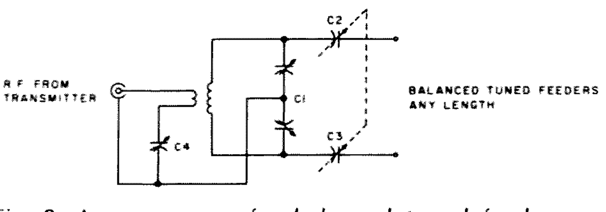

Fig. 8. Antenna tuner for balanced tuned feeders any length, with a variable capacitor is series with the primary to reduce the swr between the transmitter and the tuner.

You may ask, "Why should I go to all the bother of building a three-dial antenna tuner and a tuned feeder antenna system?" "What does a tuned feeder system accomplish that is not accomplished with my present antenna?" One important accomplishment of a balanced tuned feeder system is that it can be tuned to exact resonance at any frequency in any band for which the antenna is designed. For example, the 80 meter band extends from 3500 kHz to 4000 kHz. The resonant length for 3500 kHz is over 133½ feet. The resonant length for 4000 kHz is only 117 feet. A coax-fed antenna of one length cannot be resonant at both ends of the band. With a centerfed doublet, using tuned feeders, the antenna system can be made resonant in any part of the band, thus fulfilling the requirement of Antenna Axiom 1.

Another important feature of a tuned feeder antenna system is that the rf is effectively taken from the transmitter to the antenna (Antenna Axiom 2).

Another advantage of a tuned feeder antenna system is that the antenna tuner effectively prevents transmitter harmonics from getting into the antenna and being radiated (Axiom 6). Coax-fed dipoles, coax-fed trap dipoles, coax-fed parallel dipoles, and coax-fed trap vertical antennas all accept and

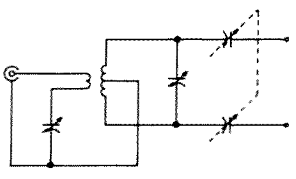

Fig. 8(a). Using a center-tapped coil in place of the split stator capacitor to obtain a balanced rf output.

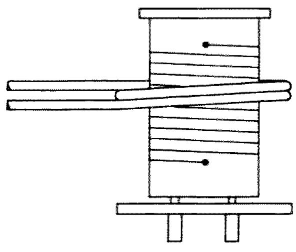

Fig. 9. Antenna coil plugged in through the heavy wire self-supporting primary coil.

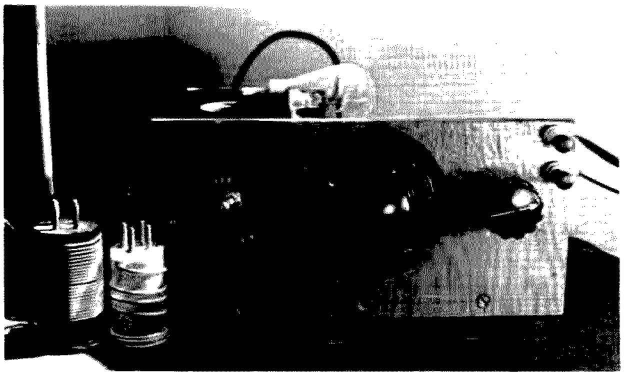

"Old reliable" antenna tuner — front view. This shows the neon tube and the 80 and 15-10 meter coils.

radiate any transmitter harmonics that are in a band for which the antenna is designed, and which are in the transmitter's output.[10]

Multiband operation is effectively accomplished with a tuned feeder antenna system. An antenna, designed for a lower frequency band, is used on harmonically-related higher frequency bands by tuning the feeders to the harmonic frequencies.[11]

With a good antenna tuner, feeder length is not critical. This makes possible high antennas. (Antenna Axiom 3).

Tuned feeders can be used with good results to feed vertical and groundplane antennas that are half vertical and half horizontal.[12] Tuned feeders have worked very well with a Hustler 4BTV

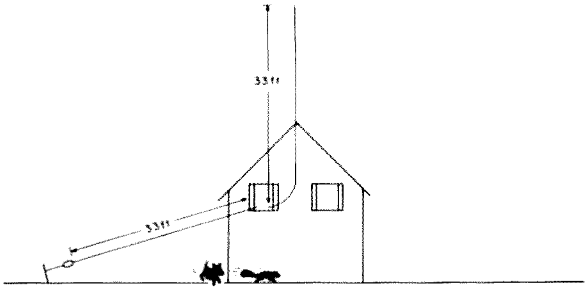

Fig. 10. 33-ft. vertical and 33-ft. "slanter" coming into a second-story shack. Series tune both for 40 meter operation (Fig. 3). For 20 meters, voltage-feed the vertical part only (Fig. 2). For 15 meters, feed both parts in series (Fig. 3). The antenna can also be made to work on 80 meters by using a large coil in the series tuning arrangement.

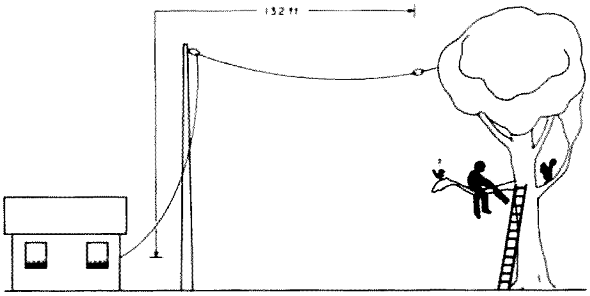

Fig. 11. An in-the-shack endfed antenna. Use parallel-tuned coil with plug-in coils for each band (Fig. 2). This will work on 80 meters and higher frequency bands on harmonics. See reference 1 for means of lengthening the antenna for harmonic operation.

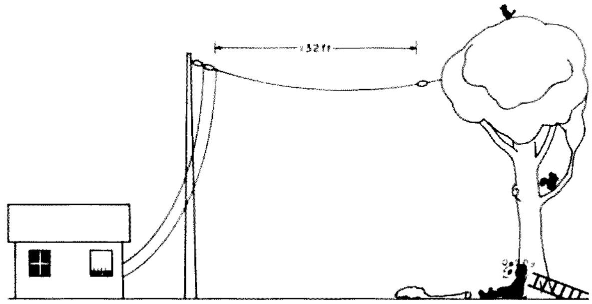

Fig. 12. Endfed "zepp" antenna for 80 meters (CW). Use balanced feeder tuner. This will work on higher frequency bands (harmonic operation). Tune feeders to the frequencies of the higher frequency bands. A centerfed antenna 66 feet on each side of center tuned feeders would be better, if all parts of the 80 meter band are to be used (both CW and phone).

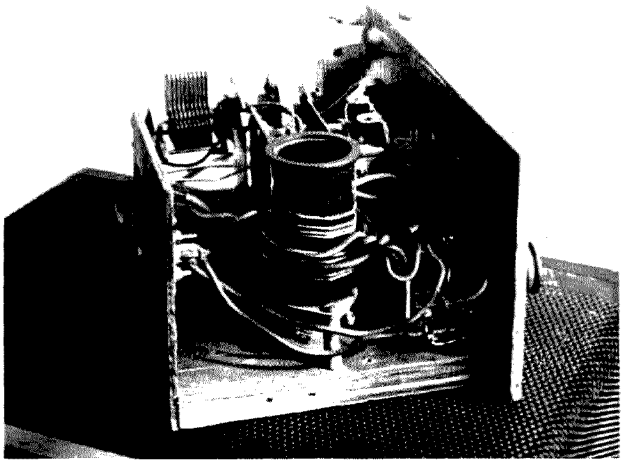

"Old reliable" antenna tuner — side view. This shows the plug-in coil arrangement.

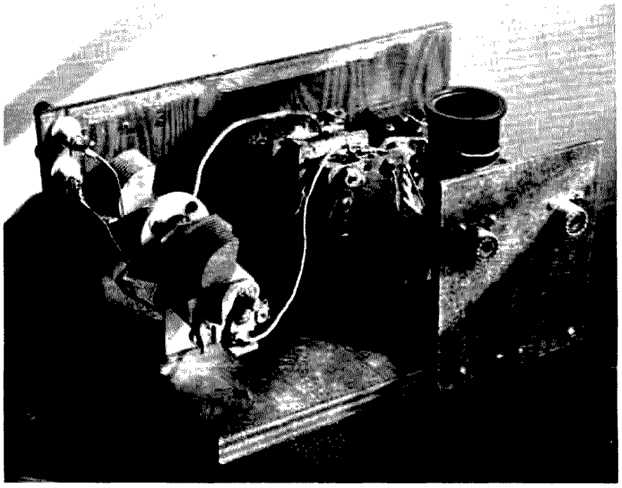

"Old reliable" antenna tuner — back view. The two coax connectors and front switch are for switching the tuner between receiver and transmitter or for switching between two transmitters.

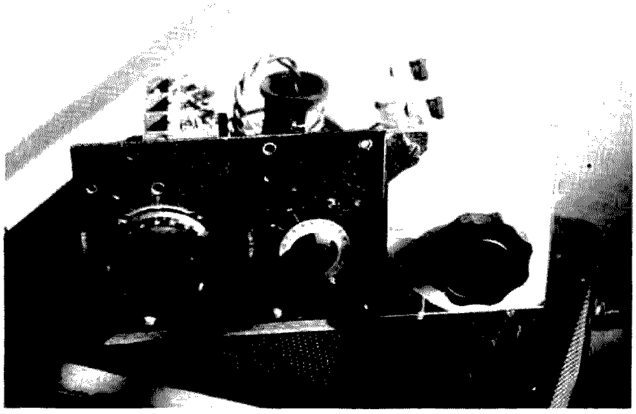

Another antenna tuner with primary coil which plugs in.

trap vertical antenna.

For amateurs who like to talk (or boast) about their low swr, the swr between the transmitter and the antenna tuner can be reduced to a very low value on all bands with careful adjustment of the tuner.

Tuned feeders are the best kind to use with some kinds of beam antennas. For example, to use a W8JK flattop beam on its harmonics, tuned feeders must be used. Tuned feeders make it possible to use V-beams on several frequency bands.[13]

If the radiating element of a rotating beam antenna is fed with tuned feeders, it can be tuned to exact resonance on the frequency being used. This will make the antenna work better on both the phone and the CW frequencies.

If you want to be able to have good QSOs on any frequency within an amateur band, if you want to eliminate any fear of harmonic radiation, and if you want a larger percentage of your calls to result in QSOs, use an antenna tuner and an antenna center-fed with tuned feeders. You will be pleased with the results. ■

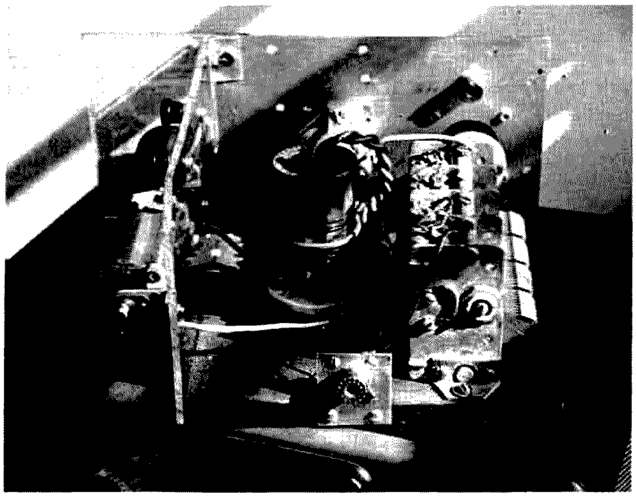

Back view of the other antenna tuner.

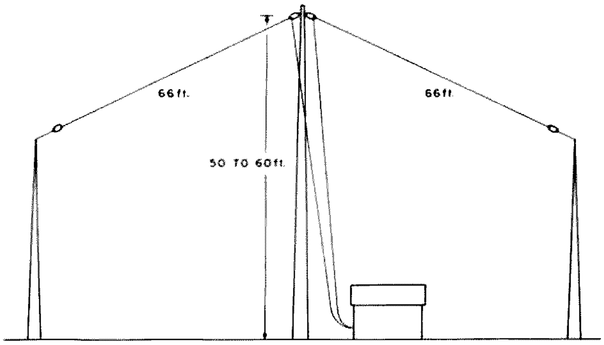

Fig. 13. 80 meter tuned doublet operated on harmonics for the higher frequency bands. Use balanced feeder tuner. This is the best all-around antenna for multiband use. (This is the W8BVU/WØVM field day antenna.)

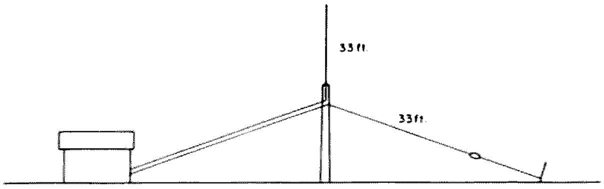

Fig. 14. Vertical "slanter" tuned doublet for 40, 20, and 15 meters. Use balanced feeder antenna tuner. It also works on 80 meters with the 80 meter antenna coil in the tuner. Several "slanters" could be used and spaced radially to make a ground-plane antenna for 40, 20, and 15 meters.

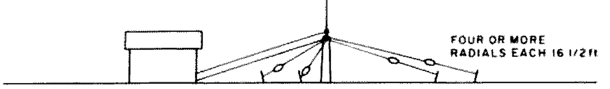

Fig. 15. Ground-plane antenna for 20, 15, and 10 meters. Use balanced feeder antenna tuner.

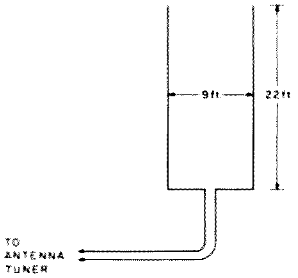

Fig. 16. A vertical "endfire" bidirectional beam antenna for 20, 15, and 10 meters. Use balanced feeder antenna tuner.

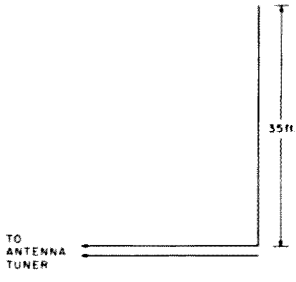

Fig. 17. A "vertical zepp" for 20 meter CW. Strung on two bamboo fishpoles taped together, this antenna has worked into Europe from St. Louis, Missouri, using a Ranger 1, with only 80 Watts dc input to the final stage. The antenna was at ground level and the feeders went down a few feet into the shack.

References

1. "Simple Dipole Antennas," Jim Fisk W1HR, *Ham Radio Horizons*, January, 1978, pages 18 through 26, is an excellent article on coax-fed antennas. It describes several antennas, including parallel dipoles and trap dipoles. Much useful data is presented. However, starting on page 21 is a section called "Simple multiband antennas." This states, "There's no doubt that the most efficient (and simplest) multiband antenna is a half-wave dipole cut to resonate at the lowest operating frequency, centerfed with open-wire transmission line through an antenna tuner."

2. The theory of the need for extra length is beyond the scope

of this article. For a practical means of changing the antenna's length inside the shack, see "A 'Stretcher' for Endfed Multiband Wires," Howard J. Hanson W7MRY, *QST*, July, 1972, page 32.

3. "Why Coax?" by Ed Wagner G3BID, *73 Magazine*, November, 1971, page 96, and *Understanding Amateur Radio*, 2nd ed., ARRL, chart on page 121.

4. See *The Radio Handbook*, 1939 edition, page 425, "flattop length." Also see page 424, Fig. 12, "The evolution of a zepp antenna."

5. See *Understanding Amateur Radio*, 2nd ed., pages 122, 123, " 'Open-wire' Feeders," and page 264, "The Center-fed Dipole." (This antenna has often been erroneously called a "centerfed zepp.")

6. See "Gee, What's a Zepp?" Charles G. Miller W3WLX, July, 1975, *73 Magazine*, page 111, and the ARRL *Antenna Book*, pages 179 and 180, "Centerfed Antennas."

7. See "A Field Day to Remember," William R. Stocking W8BVU, *73 Magazine*, June, 1969, page 44.

8. A "transmatch" is a form of antenna tuner.

9. For this capacitor, a two- or three-section broadcast band variable capacitor with all sections connected in parallel can be used. I had no swr meter for many years and used a neon bulb and field strength meter to tune the antenna system to resonance. The variable capacitor in series with the primary coil was added after I obtained the swr meter. Now, as do other hams, I keep the swr as low as possible.

10. See the ARRL *Antenna Book*, page 188, "Harmonic Radiation from Multiband Antennas."

11. See ARRL *Understanding Amateur Radio*, 2nd ed., page 123, "Multiband Operation" and the ARRL *Antenna Book*, page 179, "Centerfed Antennas."

12. See the ARRL *Antenna Book*, page 187, "Combining Vertical and Horizontal Conductors."

13. See the ARRL *Antenna Book*, page 174, "Feeding the V."

Looking *West*

from page 18

to go ahead and prosecute such a case? To get them to say: Here is an individual that we want to take the time to prosecute?

"There have been some interesting things that we have learned in working on this one case. The first questions they have asked (federal authorities) is if there are any tapes of the individual. It is my opinion that although section 605 of the Communications Act of 1934 states that the privacy provision does not apply to amateur communications, and I have not researched it, this distinction is invalid. There is no rational basis to hold that a communication by a police officer on a radio is private and cannot be revealed to a third party and that what I say via a two meter repeater need not be held so. Still, when you get down to the prosecution of these cases, you are asked if you have any tapes. Therefore, I have recommended to several repeater owners who have tape-logging systems (or volunteers recording people among the usership) that when jamming starts tapes be made and a log (written) be kept and it all be documented. It's a lot of work, admittedly.

"I'm presently in the process of meeting with the FCC in Long Beach (California) to find out just what they will want from the amateur to go ahead and take these cases. However, when you get down to it, it's going to be basically the amateur's job. You will get a lot of lip service, a lot of excuses, and if you convince the FCC to prosecute, then you have to convince the U.S. Attorney to act. Believe me, this takes pressure. Pressure is the only thing the U.S. Attorney knows (understands). In our ranks, we have such pressure. We have amateurs who are correspondents for all phases of the media, including major newspapers and television networks. Amateur radio has got to learn how to make use of the members of the service. Believe me. A phone call from a nationally-prominent news correspondent can make a world of difference as to whether a case is prosecuted. This is one idea. There can be no general rule. However, let's phrase a few items for you to think about.

"Let's first explore how we can get the government to act. Number one, you must document what has taken place. You must have tape recordings of the individual and his activities. It also must be more than once (thereby creating a definite pattern of behavior).

"You must have a DFing crew. In cases of repeater jamming, this task belongs to four or five (dedicated) people. While other groups might assist, your central group should be four or five people of the type who would turn in their own mother if need be. This is because you have situations where people (DFers) spend time trying to disprove the identity of a jammer if it turns out to be a friend. Also, you must have security (total) within your group, since premature announcements or leaks can ruin such activities (prejudice future litigation). One does not sit down at a poker table, lay out one's hand to full view, and then start betting. Handling malicious interference is just that. It's a question of playing your cards just right and knowing when to make the right move.

"Once you have set that hypothesis, you can then proceed to build your case. Document it. You must actually document exactly how you did your DFing. When you get into the prosecution of such a case, the federal authorities are going to ask this. Also, you must be able to show that your DF equipment is working accurately, and how you arrived at your conclusions.

"One other thing that I would strongly urge those into DFing for this purpose to do is keep an accurate map of all of their bearings, their location when taken, the date, and the time. This can present a pattern and prove a case. Once you have all this, you then have a basis to go to the FCC and request their help. As I said earlier, we are currently meeting with the Long Beach FCC office, coordinating our efforts so that all this work by amateurs will not be wasted.

"It is my opinion that the U.S. Attorney has been instructed by the Attorney General that amateur radio cases of the type involving malicious interference are lowest-case priorities. I think you must face the fact that this is what their feeling is. They feel you are treading in an area of First Amendment rights. . .

"Therefore, it is important to have some way of protecting yourself—that is the most important thing.

"There are many other things that can be done, but now is not the time to go into detail. My purpose here was to throw out some ideas for you to consider.

"We take tests; we learn rules; we are told that there are certain fines for violating the law. We are basically law-abiding. However, there is that small percentage of people I prefer to call mentally demented who say, 'If I can't talk, then nobody will talk,' or who enjoy swearing and the jamming that prevents others from talking. Those are my ideas. They will be developed further. I did not become an amateur to put up with that stuff, and I don't think that I should be afraid to turn on my radio in the car when my wife and particularly my child is there."

The above was transcribed from a tape recording made on September 23, 1978, at the ARRL Southwestern Division convention in San Diego, California. They are the statements of a man who cares, and very closely echo my views. In the near future, copies of this talk and others at the special six-hour seminar will be made available through the seminar sponsors. Watch your normal amateur media outlets and this column for further information. Comments on Joe's ideas can be directed to him through this column. LW will continue watch on this topic until the amateur service rids itself of this menace to its continued existence.

THE GROWING WELL DEPARTMENT

Thanks to William Oliver Grieve W7WGW, I have some interesting news concerning two meter activity in Arizona. First, congratulations to W7WGW on being elected as secretary of the Amateur Radio Council of Arizona. We at LW wish him well in this position. Oliver owns WR7AFC (147.60/.00) and WR7AHJ (147.87/.27) in the Phoenix area.

Now, how many repeaters would you imagine that a state like Arizona plays host to on two meters? Well, unless I have counted wrong, the new list shows 53 such machines, including the first two inverted tertiary allocations on 146.745/.145 and 146.865/.265. Judging by this list, one should be able to go just about any place in Arizona these days and have two meter communica-

Continued on page 134

Build a Realistic S-Meter

—"you're S9 + 40, OM!"

Ralf Beyer DJ3NW
Opferkamp 14
33 Braunschweig-Waggum
Germany

What is the most fixating item in the ham shack when you have tuned in a signal? The S-meter! Do you trust it? No!

These are hypothetical answers to these questions, but chances are great that this would be the response if someone were asked to investigate the role of the S-meter in many of today's receivers. All of us have had our own experiences with S-meters, but a general trend can be observed centering around four major problems:

1. Many S-meters show nearly accurate readings in the vicinity of the S9 mark.
2. Many S-meters indicate much higher S-values than appropriate for signals stronger than S9.
3. Many S-meters are insensitive to signals below S3 or S4. ("I can copy you S4 though you are not moving the needle.")
4. Many S-meters indicate much lower S-values than appropriate when SSB or CW is received. ("Say aah or press the key, so I can read the meter.")

Correspondence with an equipment manufacturer showed that he was well informed about these problems. But experience shows that manufacturers are reluctant to invest in this field because of increased cost and, more important, because radio amateurs have willingly accepted the S-meters as they are and because they have no opportunity to check the calibration in most cases. A simple method is presented to solve the aforementioned problems at moderate cost. The method described is applicable to both i-f or af signal based S-meter circuits. However, af signal processing was chosen for the sake of simplicity. A Heath SB-301 receiver was used as the test vehicle.

The Basic Idea

A block diagram of the suggested S-meter circuit is shown in Fig. 1. The af signal of the receiver, taken in front of the af gain control, is the input signal for this circuit. It is routed to a buffer to provide isolation from the receiver to keep the characteristics of the receiver unchanged. The signal is then amplified to a level which allows a diode in the rectifier circuit which follows to conduct even during small amplitudes of the input signal. If the rectifier output is connected to an S-meter and if the amplifier has a high enough gain to produce a

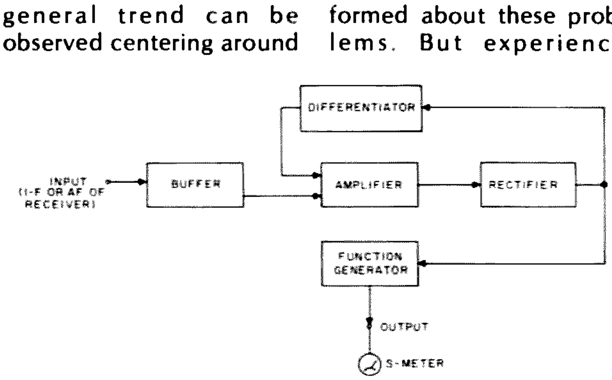

Fig. 1. Block diagram of the S-meter circuit.

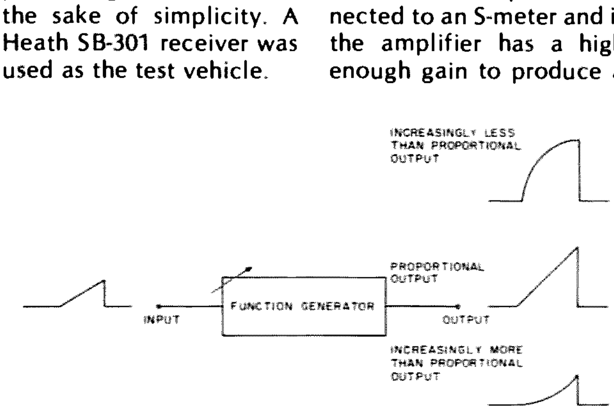

Fig. 2. Possible output waveforms which may be obtained from a simple variable function generator using a ramp waveform as the input.

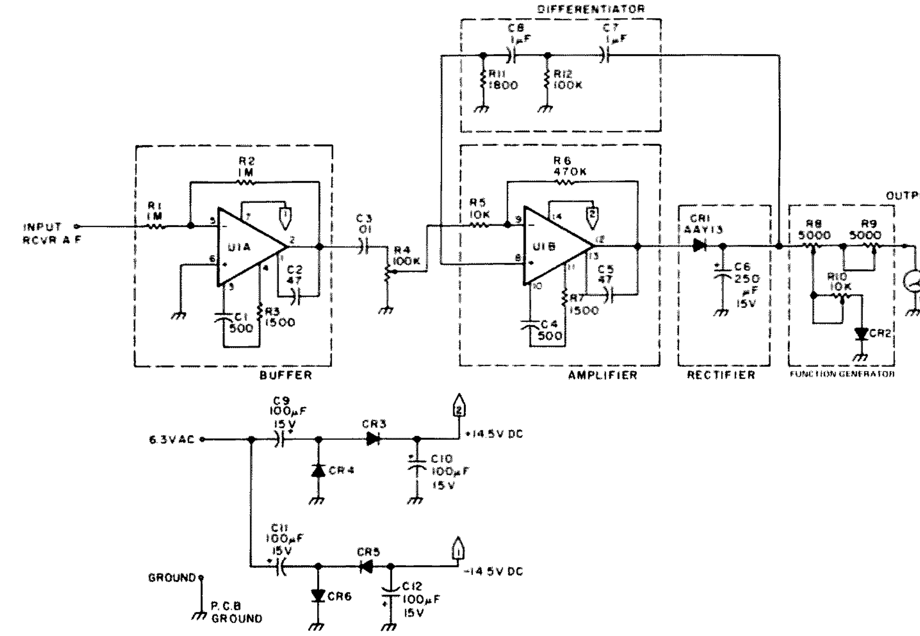

Fig. 3. Schematic diagram of the S-meter circuit and power supply. CR2 is a low forward-bias germanium diode, Siemens RL32g or equivalent. CR3 through CR6 are BAY18 diodes or equivalent. M1 is a 1 mA, 100-Ohm internal resistance unit. U1 is an MC1437L dual op amp or equivalent.

reasonable output even for a small signal amplitude input, the circuit discussed so far would already be adequate to cope with S-meter problem No. 3 (inadequate sensitivity for weak signals). However, for most receiver agc characteristics, the gain of the amplifier would be too high now for larger input signal amplitudes. This would cause the S-meter to indicate a much higher S-value than appropriate, presenting S-meter problem No. 2 (sensitivity too high for strong signals).

Therefore, a so-called function generator is placed between the rectifier and the S-meter. A function generator is a device which produces an output signal that can be any function of its input signal. For example, a signal of linearly increasing amplitude (ramp) at the function generator input may be converted by the function generator to a signal which is proportional or increasingly more or less than proportional to the input signal (Fig. 2).

It is obvious that problem No. 2 can be solved if a function generator with a degressive (increasingly less than proportional) input/output transfer function is placed between the rectifier and the S-meter. The selection of an appropriate transfer function depends, of course, on the transfer function between the receiver antenna input and the rectifier output (determined mainly by the gain control characteristics of the receiver) and on the layout of the S-meter scale. Both, however, can be matched to each other by the function generator so that signals at the receiver antenna terminal which range, for example, from S1 to S9 +60 dB are correctly indicated by the S-meter.

With the system described so far, it is possible to obtain an accurate indication of the signal strength for static (key-down) signals. Keyed or modulated signals, however, make the needle fluctuate which makes reading the meter difficult (problem No. 4). A large capacitor in the rectifier circuit would help, of course, to make the meter needle more steady. But the limited output power of the amplifier, its output impedance, the impedance of the rectifier, and the inertia of the moving coil in the S-meter form a low-pass filter which prevents the needle from reaching the same position for CW/SSB reception as for an identical key-down condition. And, a large capacitor makes the S-meter similarly less responsive in the other direction, too, because the decay time constant is also increased. This prevents the S-meter from showing a quick dip when comparing barefoot/linear operation or when looking for a minimum in antenna radiation pattern tests.

In order to overcome this problem, some form of "quickening" of the rectifier output signal or the meter needle movement is required. This can be achieved by feeding the rectifier output signal into a differentiator whose output signal is then fed back to the input of the amplifier (Fig. 1). Now, let us assume that a signal at the input of the circuit shown in Fig. 1 produces a positive signal at the rectifier output. Then an increasing amplitude of the input signal produces a positive slope of the rectifier output signal, too. The differentiator connected to the rectifier output also produces a positive signal at its output which is proportional to the slope of the rectifier output signal. And, because this signal is fed back to the input of the amplifier, the differentiator output signal drives the rectifier output signal to a higher level, temporarily giving the rectifier output signal and the meter needle the desired "extra punch" in the right direction.

For a decreasing amplitude input signal in Fig. 1, one would expect a similar effect which, however, would drive the meter needle in the opposite direction because the differentiator output signal is negative for a negative slope of the input signal amplitude. This would cancel the desired effect just achieved, so nothing would be gained. But because of the fast attack/slow decay characteristics of the rectifier circuit, a rising amplitude input signal produces a positive and much steeper slope of the rectifier output signal than a drop of the input signal amplitude. A drop in signal amplitude produces a negative but much shallower slope of the rectifier output signal. For a constant amplitude input signal in Fig. 1, the differentiator is inactive, of course, and does not affect the remaining part of the circuit.

The Circuit

A schematic diagram of the S-meter circuit is

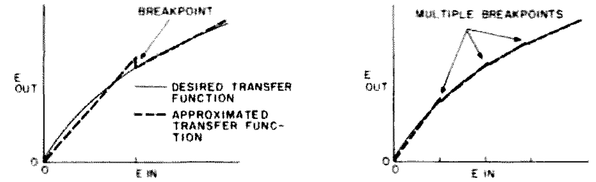

Fig. 4. Approximation of a desired transfer function by a function generator having a single breakpoint, Fig. 4(a), and multiple breakpoints, Fig. 4(b).

shown in Fig. 3. A dual operational amplifier is used for both the buffer and the amplifier. Both amplifiers are frequency compensated by means of C1, R3, C2, and C4, R7, C5, respectively, as recommended in the manufacturer's data sheet. The required supply voltage of ±15 V dc is provided by two voltage-doubling rectifier circuits connected to the 6.3 V ac filament supply of the receiver.

The af signal of the receiver, taken from a point preceding the volume control potentiometer, is connected to the input terminal of the circuit. A shielded cable is recommended for this connection. The buffer, U1A, which follows provides a high input impedance to the receiver so that the af circuit of the receiver is not affected. The buffer output signal is coupled to the amplifier, U1B. The input to this amplifier is controlled by trimmer potentiometer R4. This potentiometer is adjusted such that a maximum signal amplitude of S9 + 60 dB at the antenna terminal of the receiver causes the output amplitude of amplifier U1B to just reach the limits of linear operation, i.e., approximately ±12 volts. Of course, potentiometer R4 can be adjusted so that the amplifier is driven into its output limitation for signals greater than S9 + 40 dB or so in order to contribute to the desired degressive transfer behavior of the S-meter circuit. However, it was not found necessary in the case of the SB-301 receiver. The amplified af signal is then rectified by the rectifier circuit which follows. A germanium diode is recommended for this circuit. The rectifier output is a dc signal which represents the amplitude of the rf signal at the antenna terminal of the receiver. The function generator which follows modifies this signal in order to match its slope to the graduation of the S-meter scale.

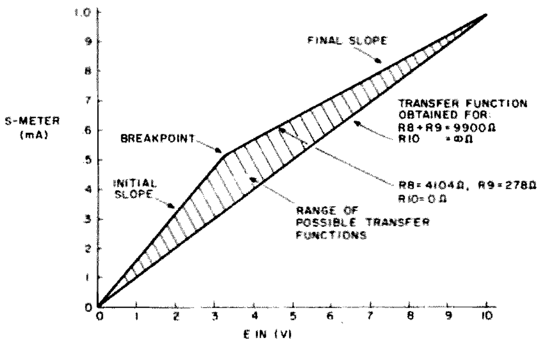

Fig. 5. Range of transfer functions which can be obtained with the function generator and the S-meter of Fig. 3. Values of R10 range from zero to an indefinitely large value and R8 and R9 adjusted for full-scale output (1mA) at maximum input (10 volts).

The Function Generator

Fig. 3 shows the diagram of a simple function generator with one so-called "breakpoint." The breakpoint determines the amplitude of the signal applied to the generator input at which the input/output transfer function of the generator is switched from an initial slope to the final slope. Diode CR2 in Fig. 3 acts as the switch. For an ideal switch with normally open contacts and contacts closed when a signal of given amplitude is applied to the function generator input, the transfer function which can be obtained is shown as a broken line in Fig. 4(a). For a given impedance of the S-meter, the generator transfer function would be controlled by R8 and R9 (Fig. 3) alone up to the breakpoint. But, when the breakpoint is reached, the switch is closed and R10 is effective. The amplitude of the generator output signal is immediately reduced to a lower level (which is not desired), but the steepness of the slope of the resulting transfer function is also reduced, which gives a first-order approximation of the desired transfer function as shown in Fig. 4(a). For a closer approximation of the desired transfer function, more breakpoints (switches) are required as shown in Fig. 4(b). However, as the diode CR2 in Fig. 3 is not an ideal switch, and because it becomes only gradually conductive, the diode characteristic can be used to advantage, thereby eliminating the need for multiple discrete breakpoints.

Fig. 5 presents the range of calculated transfer functions which can be obtained with the function generator shown in Fig. 3. The slope of the transfer function depends on the characteristics of diode CR2, of course. The diode shown in Fig. 3 was taken from the junk box, but comparable results can be obtained with other germanium-type diodes which have a low forward bias of $U_D = 200$ mV at $I_D = 0.2$ mA and $U_D = 350$ mV at $I_D = 1$ mA.

The Differentiator

"Quickening" of the S-meter is achieved by feeding back the output of the twofold differentiator shown in Fig. 3 to the input of the amplifier. The output can be adjusted by means of R12. This type of adjustment was found to be more convenient than changing capacitors C7 or C8. Furthermore, the terminating resistor, R11, at the non-inverting input of amplifier U1B was kept constant by this method in order to avoid ill effects on the remaining circuit.

As an ordinary S-meter indicates the average current flowing through the meter with respect to time, the amount of "quickening" is determined by the average amplitude of the differentiator output signal. The average amplitude of a signal, however, is determined by its average deviation from zero. Positive deviations are counted positive and negative deviations are counted negative. Fig. 6 presents two computed output functions of the differentiator shown in Fig. 3 obtained for identical inputs and different values of R12. It can be seen that a large value of R12 increases the (positive) average amplitude of the differentiator output signal and thereby the amount of "quickening." Optimum "quickening" is determined by a number of factors such as the time constants of the rectifier circuit, the damping of the S-meter, and so on. A value of 100k Ohms for R12 was found to be optimum when

Wow! A Good Portable Receiver!

—thanks, Panasonic!

Photo by Robert Hinman WA2DIZ

Joseph W. Long WA2EJT
Chemistry Dept.
Broome Community College
Binghamton NY 13902

The Panasonic RF-2200 is a unique multiband receiver and should be of great interest to many amateurs. The receiver tunes standard broadcast AM and FM and is general coverage in the shortwave spectrum from 3.9 to 28 MHz (more about the shortwave frequency limits later on).

There are several items which make this receiver of so much potential interest. The first concerns the shortwave section. The coverage is in 6 bands, each 4 MHz wide, which are tuned with a linear dial scale calibrated every 10 kHz and which can be read to within about 3 kHz throughout the whole shortwave spectrum.

There are two built-in crystal calibrators, one at 0.5 MHz and one at 0.125 MHz, with which the dial may be very accurately calibrated. When calibrated at the appropriate spot, any frequency throughout its range may be dialed up with the volume off. Turning up the receiver volume will bring in the station if it can be heard. Shades of the R-390/51 J Collins general-coverage receivers!

The vfo tunes over 4 MHz, but, even with this range, the dial is surprisingly linear. For example, my RF-2200 on band SW 3 (12-16 MHz), when calibrated at 12 MHz, has a dial error of no more than 10 kHz all the way up to 15.5 MHz. The 16.0 MHz point is off by about 20 kHz.

Turning on the calibrators automatically disconnects the antenna, turns on the bfo, and declutches the linear dial so that there are no points to offset. That's just about like it's done in my Collins R-391.

The receiver also has an excellent product detector tuning meter and rf gain control, making it great for use within the ham bands. Also useful are a wide/narrow i-f selectivity switch (narrow is not very narrow), separate bass and treble controls, and a two-speed dial.

The SW section of the RF-2200 is very hot, and the built-in whip antenna brings in all manner of signals. The receiver is advertised as tunable from 3.9 to 28 MHz, but mine actually goes all the way down to 3.5 MHz, with the dial getting rather nonlinear. It also tunes above 28 MHz—to just above 28.5 MHz.

For $140, you don't get everything, of course, and the receiver does have some deficiencies which must be mentioned. First, there is a slow drift during reception of CW and SSB signals which is independent of frequency. The instruction manual suggests that the bfo be turned on 5 minutes early for "wonderful CW and SSB reception." This suggestion is helpful, but there remains a slow drift even after long periods. Since the problem does appear to be caused by drift in the bfo circuit, I suspect that it could be cured fairly easily.

Another deficiency is a dead space in the tuning gears. This is only dead space; the signals do not keep going the wrong way when you reverse direc-

the circuit was installed in a Heath SB-301 receiver. Compared to the indication of the S-meter for a key-down signal from a transmitter, this value of R12 produced an almost identical indication on the meter when SSB (processed and unprocessed speech) was used and only a slightly higher one for CW.

Construction

The circuit shown in Fig. 3 was built on a 65mm × 65mm (2½-inch × 2½-inch) Vectorboard. Helitrim™ potentiometers were used for all potentiometers because they are small and convenient to adjust. All other components are miniature size. A socket was used for U1. The board has four terminals: ground, 6.3 V ac, receiver af, and S-meter. The board was mounted at the back of the front panel of the SB-301 receiver by means of a mounting bracket held by the screw in the upper right-hand corner of the panel. A shielded cable was used for the connection between the "hot" end of the receiver af gain control and the input terminal of the circuit.

Alignment

A signal generator and an attenuator are required which can provide an unmodulated signal on all bands of interest within the range of S1 through S9 +60 dB. A signal amplitude of 50 microvolts at the 50 Ohm antenna terminal may be used for S9 and half the amplitude (−6 dB) of the preceding S-value for the next lower S-value, i.e., 25 microvolts for S8 and so on [1 dB = 20 · log(Vout/Vin) for the attenuator]. Some signal generators are calibrated to produce a signal of given amplitude if the generator output is unterminated (open). Others are calibrated for an output terminated with 50 Ohms. One should be sure which type of generator is on hand before the alignment is started.

First, the receiver should be checked to be in good condition and for uniform gain on all bands of interest. With the rf gain control set to maximum gain, agc on, mode switch set to USB, LSB, or CW, and the receiver tuned for maximum input to the S-meter circuit, each band should be checked to note what signal amplitude at the antenna terminal of the receiver produces a given beat note amplitude at the af input of the S-meter circuit. For the SB-301, identical beat note amplitudes were obtained on all bands with an input signal variation of less than ±1 dB (±1/6 S-unit).

Next, the receiver should be checked for uniform gain in all modes. It was noted, for example, that for a constant signal amplitude at the antenna terminal of the SB-301, a somewhat higher beat note amplitude was obtained when the receiver was switched from LSB to USB. The reason for this was a higher signal amplitude of the bfo crystal used in the USB mode. A potentiometer across the terminals of this crystal was used to reduce the bfo output amplitude in this mode so that a uniform receiver gain was obtained for both USB and LSB modes. No separate CW filter was installed in the SB-301 which may have a passband attenuation different from the SSB filter. And because the USB crystal is also used for CW in the SB-301, an identical receiver gain was obtained in the CW mode, too.

Next, the function generator is aligned. This should be done on a band on which the receiver has an average gain compared to all other bands. Three parameters of the function

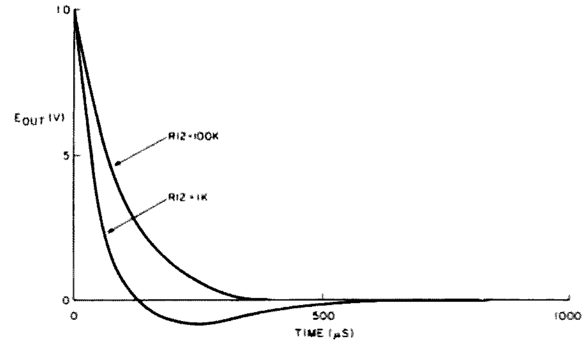

Fig. 6. Calculated response of the differentiator in Fig. 3 to a 1-volt positive-going pulse using different values of R12.

generator transfer function can be adjusted within given limits (see Fig. 5): the initial slope (primarily controlled by the sum of R8 and R9), the input voltage at which the breakpoint occurs (primarily controlled by the ratio of R8 to R9), and the final slope (primarily controlled by R10). It is generally possible, therefore, to adjust the transfer function of the generator so that it passes through one given point of the desired transfer function left of the breakpoint and through two other given points right of the breakpoint. At other points, there may be a deviation of the transfer function which can be implemented from the desired one. But the trick is to find those three reference points of the desired transfer function to which the function generator can be adjusted almost perfectly, while the average deviation at all other points is reduced to a minimum. For the SB-301, such points were found at S5 (left of the breakpoint) and S9 and S9 + 40 dB (both right of the breakpoint). By an iterative process, R8, R9, and R10 were adjusted so that for appropriate signals at the antenna terminal of the receiver, the S-meter showed accurate S-readings at these points and a maximum deviation of about ±2 dB (±1/3 S-unit) at all other points. The average deviation was less than that and negligible for signals below S9 + 10 dB.

Conclusions

In 1969, the S-meter circuit was installed in a SB-301 receiver and has provided stable operation since then. No realignment has been necessary so far, but annual checks of the receiver are recommended. It is helpful, therefore, to keep a record of the S-meter readings which can be obtained with the internal crystal calibrator of the receiver on all bands. Any deviation from these values which may occur later indicates that the performance of the receiver, the S-meter circuit, or the calibrator is degraded and that there is something to be done.

The S-meter problems listed in the introduction were solved satisfactorily and the S-meter reports became more meaningful and objective. This is particularly useful for relative reports, e.g., a comparison of barefoot/linear operation or antenna checks. Absolute reports may be accompanied by a short statement on the antenna used, on topographical peculiarities, and on the accuracy of the S-meter. But simply spoken, it is a real pleasure to give that low-power or faraway station a better and accurate report and not to fool others with unrealistic S9 + 20 dB reports. ■

tions; they just don't change at all. The effect is noticeable only on CW and SSB. Even at low speed, the tuning is a bit fast for CW and SSB—a very delicate touch is required. Otherwise, the feel of the tuning is really excellent and smacks of quality.

In the higher SW bands, the rf gain control pulls the signals quite a bit. I actually rather like this deficiency, as it can be used as a fine tuning control.

A fourth problem is the presence of an unusual kind of spurious signal. When very strong CB signals are tuned in on band 6 (24-28 MHz), they can still be heard on band 5 (20-24 MHz) at the same points on the dial. It sounds as though there is some sort of leakage in the hfo chain in the front end. This does not seem to be a serious problem; the only place I have noticed it is with very strong CB signals.

A test which it occurred to me to make just as I write this is for mechanical stability. A good rap on the side of the set, or a two-inch (5.08 cm) drop test will not throw the receiver off from zero beat. Amazing!

There are many comments which are important regarding the AM and FM bands on the receiver. The AM reception is excellent. It is extremely sensitive, and it seems much less susceptible to noise pickup than most other receivers. For example, in my office at work I can regularly receive WQXR from New York City (over 100 miles away), while other radios from the same spot can barely get the local Binghamton stations through all of the fluorescent light noises. This noise immunity really amazes me; I wish I could explain it.

The dial is calibrated every 20 kHz on the BC band and is quite accurate; the greatest error on my

2200 is about 10 kHz around the middle of the band. This is infinitely better than the calibration on most other transistor radios I've seen.

The AM antenna may be swiveled. It's on the top of the radio, is calibrated in degrees, and may be used for amateur direction-finding. When I've tried it, all I was able to prove was that Binghamton, New York, is somewhere in the middle of the Atlantic.

I have saved one of the nicest sections of the receiver for last: the FM band. FM on this set is truly outstanding. It is about the hottest FM receiver I've ever heard; it outshines my $700 McIntosh FM tuner in this regard. One evening, my girl friend and I logged stations from Syracuse, Utica, Scranton, and Wilkes Barre on the built-in whip antenna from a location where other portables can hear the local stations and nothing more. The 2200 has very few spurious responses on FM, many fewer than I have ever seen on any other FM portables.

The FM selectivity is also outstanding. Binghamton is blessed with two very powerful stations on 98.1 and 99.1 MHz, yet WBRE in Wilkes Barre, on 98.5 MHz (about 70 mountainous air miles away and very weak), can be tuned in easily. FM dial readings may be estimated quite accurately, using the built-in logging scale, to about plus/minus 0.3 MHz.

The audio in the set is of first quality. The receiver produces several Watts of very clean sound. Everyone who has heard it agrees that it sounds unbelievably good. This high-quality audio is, of course, somewhat wasted on the AM and SW bands.

The receiver will play on internal batteries (4 D cells, included) or on 110 volts by plugging in the line cord. Battery life is very long.

The packaging of the radio is very nice. It has an attractive but rugged plastic case, the controls are well and plainly marked, and a momentary-on dial light is included for nighttime spy radio listening. I understand that an extensive service manual is available for $3.50, which can be obtained from Panasonic service centers.

I became hooked on the set when I got to play with one my baby brother had purchased and was raving about. After fiddling with my 2200 (when they should have been working), two of my co-workers rushed out to buy their own and a third is thinking of how he might slip one past his wife. The 2200 disease is very contagious!

The set should be available from dealers well stocked in Panasonic gear. The prices seem to range from about $117 at 47th Street Photo in NYC (which is usually out of stock) to $138, which I paid at a discount store here in Binghamton.

This little box is a real jewel. It is unique in the high quality of all three of its bands. Its "new technology" SW circuitry and tremendous audio make it a set that any receiver buff, as well as many others, will want to own.

I would like to emphasize that I have nothing to do with the Panasonic company (I wish I did!) and that this article is unsolicited. The article is just an attempt to provide an honest report on a nice piece of gear to people who may be interested. ■

William P. Plyler AH6AQ
1802-A Tinker Ave.
Honolulu HI 96818

The XITEX Video Terminal

—a quiet alternative to your Model 15

I have been in RTTY for about two years and have decided to do something about all the noise in the shack caused by the Model 15 printer. I visited a fellow ham and looked at his video terminal and knew at once that video was the course to follow.

We Air Force types are not what you would call "rolling in the money," so I looked for some type of kit to assemble. I took my search to the usual monthly publications, but this proved to be in vain, as everything appeared to be encoded in ASCII and we hams must transmit in Baudot. As my search proceeded, I still wasn't having very much luck, until, one day, I spotted an advertisement in *73*. Reading further, I was impressed with the fact that this video terminal would interface in ASCII and Baudot. This video terminal is the SCT-100, by XITEX, P.O. Box 20887, Dallas, Texas 75220.

Not only does this 5" by 10" board speak both ASCII and Baudot, but also I won't have to hock my ham gear to be able to afford it. Now whenever the FCC decides to let hams use ASCII, or I figure out what computers do, I will be ready.

This video board has the capability for serial ASCII or Baudot, full X-Y cursor control, 128 characters including upper and lower case, 16 lines by 64 characters, S-100 compatibility, and operates on 7 V dc unregulated or 12.5 V ac at one Amp. The SCT-100 single-card terminal interfaces directly to any computer or modem having serial ASCII or Baudot capability. It requires only the addition of an ASCII keyboard and a TV monitor or modified TV set. It's available in two kit forms or prewired and tested.

Well, I have to admit that all this looked good to me, but I am just a ham and I don't know much about computers, keyboards, etc. This was solved, however, by a call to the factory. After talking to them a bit and asking a few very elementary questions, I ordered a prewired and tested unit, and now, at last, I am on the way to ridding myself of a lot of noise. I ordered a keyboard kit from a parts distributer, so now I am into this thing wholeheartedly.

As fate would have it, the keyboard arrived first, so, at once, I went off to my local parts supplier, purchased two chassis, and picked up a copy of the *TVT Cookbook*. I would definitely recommend this little book to anyone attempting any video terminal project. Now, I suppose one can put the keyboard and the terminal board in the same chassis; however, I often like to do things the hard way.

The keyboard was a cinch to assemble, only taking about one hour. I checked it out and it performed okay. The messy part is cutting the chassis and causing small bits of metal to fly all over the shack. I performed a few measurements, cut the hole in the keyboard chassis, and installed the keyboard. It looked okay except for all the scratches that were added to the outside of the chassis. So out the door I went to the local hardware store for some contact paper to give the whole thing that "wood-grain look." After applying this to the chassis, it looked a lot better. I also installed wooden wedges to give the keyboard the proper angle for ease in typing . . . I don't think this

step will improve my typing, but it looks better.

Next, I moved to the chassis that would house the video terminal board. I installed a 12.5 V ac transformer and a 5-Ohm resistor to supply approximately 8 V ac to the on-board supply. The SCT-100 has a 5 V dc regulated one-Amp power supply on board, and this is enough to power the video board and the keyboard. However, if your keyboard requires -12 V dc, you will need to add a -12 V dc supply. I must point out that the parts are not critical and most can be obtained from the average junk box.

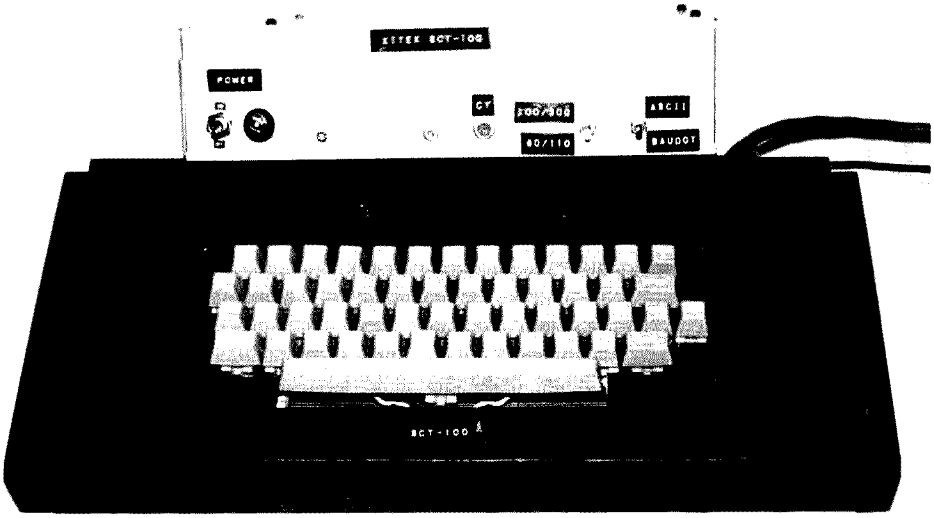

The next move was to tiptoe upstairs and kidnap my daughter's 12" TV for modification to a video monitor. This TV video monitor was used on a time-share basis until Christmas when we purchased another one for her. I used the guidelines from the *TVT Cookbook* to modify the TV. My only catch was that the TV turned out to be a hot chassis set. This problem was solved by using two old TV transformers and tying their 6.3 leads together to make an "el cheapo" isolation transformer.

At last the UPS package arrived, and it was time for the task of tying all the components together. First, you should read all the instructions; then the same instructions should be read again and again. I know the first thing one usually does is to cast aside the instructions and proceed full speed ahead. This may be okay for some people, but not me. As I have said before, I often do things the hard way.

Now that the instructions seemed clear, I made all the connections that would be required. I planned for the future and made the provisions for RS-232 and a 60 mA loop. There is one point here that I would like to bring up. There are some voltage points called E3, 4, and 5. These are used to connect either an external 5 V dc supply or approximately 7 V dc to the on-board regulator, or to strap the on-board supply to the circuit. This is not clear in the instruction, and one can look at the diagram to make the connections.

Now for the moment of truth. I hooked up the video monitor and powered up. This produced a screen full of garble, so I cycled the power switch and the screen cleared up and the cursor moved to home. The instructions make clear that if clearing is encountered, a capacitor change is in order.

Next I jumpered the RS-232 in/out ports together and plugged the keyboard in for keyboard checkout, first checking all the key functions in ASCII and then proceeding with the Baudot checkout. The Baudot mode had no letters. After reading all the directions, I strapped my

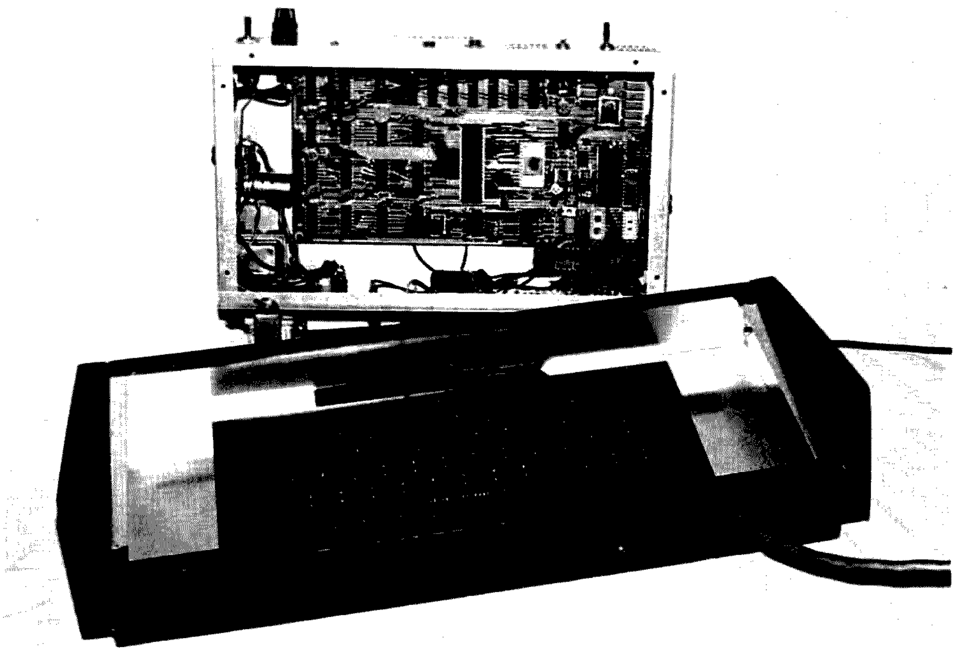

keyboard for upper case only and the Baudot func-

and discussed this situation with John McCrady.

I next turned on the rig, called CO and had my first

Bob Farrier for all their assistance

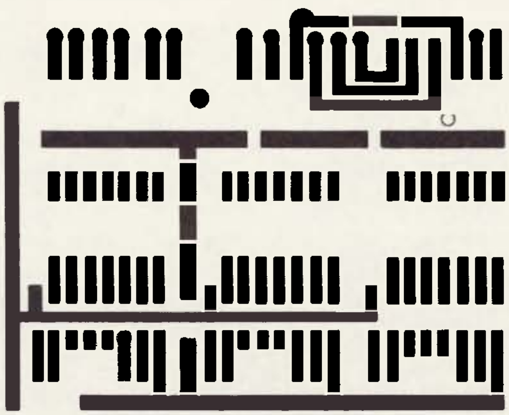

Fig. 2. PC board.

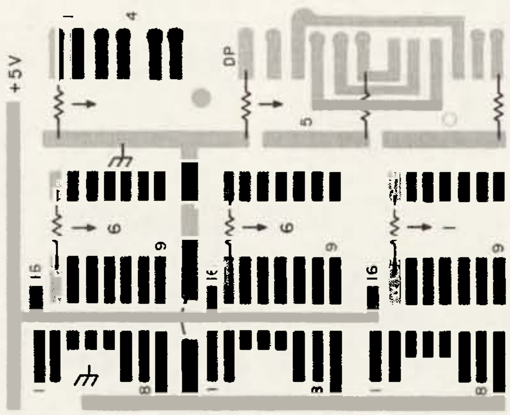

Fig. 3. Component layout (foil side view). Strap ground wire with 24 gauge.

connector or to the readout, if desired. There is a total of 16 wires used, so a 15-pin connector can be used if the ground wire

to easily mount the board and readouts inside with room to spare.

I hope this article will be of help to the many hams

turn on the inside light of the vehicle. I hope that no one thinks that I stole their idea; it was not intended, I

mention: You can also use an external 5-volt regulator instead of the 5 volts from the radio; however, in my

High Seas Adventure —Ham Style

—part III

Photos by Jules Wenglare W6YO

James E. Seidel WA6FEI
1066 N. Westside St.
Porterville CA 93257

"Commercial broadcast stations and 40 meter harmonics literally dominated the 20 meter band. No stateside signals were heard for several days. Very little was heard from anywhere."

That was the comment Jules Wenglare W6YO made about his amateur radio activities in the South China Sea during his 10-. month around-the-world cruise. He had set sail from Freeport in the Bahamas five months earlier aboard the *Yankee Trader*. In a few days the ship would stop at still another exotic port: Singapore.

The *Trader* docked in Singapore on July 18, 1977. "There were countless numbers of ships in the bay," said Jules, "making it very difficult to get dock space. The city looked very beautiful from the waterfront."

After customs clearance, the passengers were allowed to go ashore. Jules contacted Doctor Charan 9V1NR at his dispensary, and later went to his home. While there, he had a chance to get on the air for some ham contacts.

After an eyeball QSO with another ham, Bud 9V1OI, Jules purchased a ticket at the airport and flew to Bangkok, Thailand, where he met Bill HS1AGU, and a former co-worker from Delano, Dean Bartelet.

During the weekend in Bangkok, Jules went to the coast. He said he saw many "water scooters" being used. They are a very popular sport here and something one just wouldn't think people on the other side of the world would be doing. And the traffic in Bangkok? "It was bedlam," Jules mentioned, "with motor scooters, bikes, rickshaws, taxis, and wagons everywhere."

On Sunday, Jules contacted Dieter HS1ALG, an electronics professor at Bangkok University. At Dieter's apartment, they got on the air for some good DX. One nice chat was with Bill W7PHO, a well-known ham in the DX-world from Seattle.

While Jules was here, he learned that there is no official licensing in Thailand. A person interested in becoming a ham must join a radio club and then be issued a call through the club. Kam HS1WR runs the show.

After a five-day enjoyable stay in Bangkok, Jules took a two-hour flight back to Singapore. Upon arrival, he learned that the ship's stay had been extended a few more days in port. This gave him a chance to do a little more visiting.

Bud 9V1OI and his wife, Jan, hosted Jules for dinner one night. Jan, whom Jules complimented about being an excellent cook, would like to open a Chinese restaurant in southern California after Bud retires. From the way Jules praised her cooking, especially the chicken wings in a special sauce, I'm sure her restaurant would be a great success.

Bud lives in a 20-story apartment building and his beam is about 280 feet above ground. This sure makes for good DXing. Jules got some air time and again talked to John W6UZ back in Delano. He said the DX was very good.

Jules went to the post office and had this to say: "Mailing letters in Singapore was a chore. You always had to wait in a long line. Boy, they weighed every letter, wrote down the price, and then gave you a stamp separately for every card or letter. On postcards, you had to stick on an air mail sticker. Bothe the stickers and postage stamps had very little glue on them. You'd stick 'em down and they'd come off. They had glue bottles all over and you'd get glue alld over your fingers, and, oh, what a mess."

When the *Trader* was in Tahiti, the ship's radar went out, and the replacement part caught up with the ship in Singapore. Jules assisted in its installation. It arrived at the proper time.

When leaving Singapore and sailing through the straits, two extra crew members had to serve as lookouts on the bridge because there were so many other ships coming

and going. Half of them didn't have lights. "It was a nightmare," Jules said. "We were thankful that the radar was working again."

As the *Trader* sailed toward Penang, Jules said the DX was good only in the evening. When the ship got closer to Penang, he made contact with Mal 9M2MW and tried to advise him that the ship would be in port in the morning. The signals were too weak, but Harry K6MOO heard both of them very clearly, and instead of a 100-mile direct contact, a round-trip relay of over 15,000 miles was made.

After the *Trader* anchored at Penang on August 3, Jules went to the post office. While he was standing in line with some of the other passengers, this fellow came in and asked another American if he knew Jules. Well, Jules was standing only a few feet away. It was Eshee 9M2FK, whom he had worked earlier when at sea. They left the post office and called Mal 9M2MW, who met them; later, all three went back to the ship. They got on 40 meters and worked several of the local hams who were on a net.

One of the trips Jules took here was up the side of Penang Mountain. As one of the cable cars goes up, another one comes down. They both use the same single tracks. About midway up, the tracks divide into passing tracks. (There had better be no mistakes here.) From the top, Jules could see the two bright lights aboard the *Yankee Trader*, some five miles away in the straits.

Mal 9M2MW and his wife, Patricia, also hosted Jules one night for dinner. Mal is interested in Teletype™ and has several pieces of RTTY equipment, some of which is home brew. While he was here, he met Chong 9M2DJ and Tan 9M2DW.

Jules, along with some other hams, helped in taking down Mal's mast and tri-band antenna. The weather and corrosion had attacked the connections and the swr was getting high. He said it was a miracle that they got it down in one piece, due to the small area in the backyard.

While here in Penang, Jules visited the home of Eshee 9M2FK, who works for the port authority. His radio shack, located in the back of his home, is a very neat layout. In his portfolio of awards and certificates, Jules found an award from the Northern California DX Club.

The time had finally arrived for Jules to leave Penang. Within a few hours after setting sail for Colombo, he contacted a ham at Clark Air Force Base in the Philippines. He received the satellite weather report for the area which showed pretty good weather. Later, he got into Reunion Island (FR7) for an unusual contact, and then several U.S. stations. He also talked to John 4S7JD, the manager of the Voice of America radio station in Sri Lanka.

For the next few days, Jules filled several pages of his logbook working stations all over the world. He said he even had a perfect contact with an American at the embassy in Brasilia, Brazil. He also checked into the SEANET (South East Asia Net), which, at the time, was being run by Carl S79R, in the Seychelles. Also, one evening, Jules worked about seven 4S7s; a couple of them were at the home of John 4S7JD.

On August 13, the *Trader* pulled into Colombo, Sri Lanka (formally Ceylon), after sailing five days from Malaysia. Most of the passengers set out for various parts of the country, but Jules had personal guides waiting for him at the dock. It was John 4S7JD and Shanti 4S7WP, a radio operator aboard a tanker out of Colombo.

Since Jules was to be the house guest of John 4S7JD for the duration of his stay here, that's where he went. Jules and John had first worked each other when John was in Liberia back in 1965. This was the first time they had ever met in person and they had plenty to talk about, having mutual friends in the VOA.

John had invited many of the hams over to his home to meet Jules. About 6:00 pm, they began to arrive. Jules met the following: Fernando 4S7BC; Senevi 4S7SW, whom Jules had worked in the past years and on the way over; Vasanth 4S7VG; Ernest 4S7EA; Guru 4S7PG; and Paddy 4S7PB.

The following are excerpts from a tape recording made in John's home on August 14, 1977, of some of the hams who were visiting with Jules. This first one, Jules said, is Paddy 4S7PB.

"Right now we're here with 4S7 hams, and Jules W6YO is with us. He wants me to say a few words to start with. May I say a very good evening to all the gang in the Northern and Southern California DX Clubs, and I wish I were with you as I was some time back, ten years ago — in fact, 1967. Wish you all the best in good propagation for the next umpteen years. Bye-bye."

"Good evening, my brother hams in California. This is Ernest 4S7EA with Jules and my brother hams here at 4S7JD's shack. I will say '(couldn't catch the phrase)' to you all. Which is, in our own lingo, 'May your life be long.' That is how we say it. It's very nice meeting Jules and I have had the pleasure of meeting many W6s on Charlie Willie. I look forward to meeting you once again, especially my friend Jules, when he goes back home. Bye for now. 73."

"Hello boys, this is 4S7 Baker Charlie speaking. I was very happy to work my good friend Jules some days ago. He's my own age. I'm very happy to know that (laughter). Our rigs, as you know, are mostly home brew and mine is also a home-brew one. I've been getting quite a number of stations with really good signal strength. Wish you all the best till we possibly meet you on the band again. Cheerio."

(4S7SW) "Hello, my

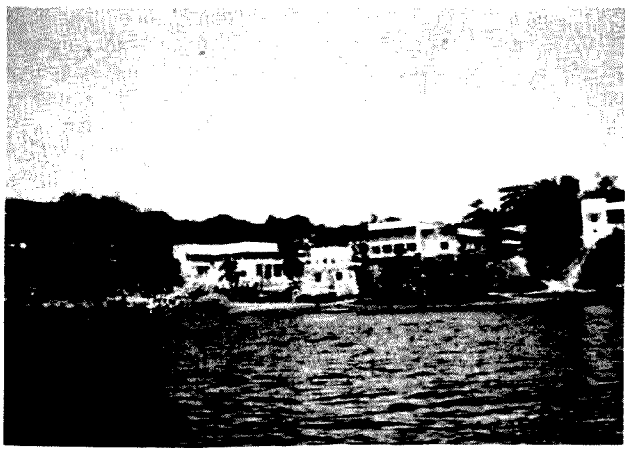

What you see is almost all of the town of Dzaoudzi, Mayotte, French Comoros. It was here in a little 8-room hotel where Jules operated with the call of FHØYO.

friends in the United States. I've been having a nice time with Jules over here. There are altogether about seven hams here; we're all having a nice time. That's about all from here. I'll pass this over to my good friend, Victor George."

"Good evening, friends, this is 4S7 Victor George and we are having a very fine time with old man Jules here. I would hope to meet many of the boys on the air very soon. 73 and wishing you an eyeball from Sri Lanka. 4S7VG, off."

A couple of days later, Jules was invited to the home of Shanti 4S7WP for a four- or five-course dinner that Jules said was very delightful.

Shanti showed Jules a VP9BM QSL card dated 1955. VP9BM is a former call held by Jules when he was living in Bermuda. "I guess Shanti was my first 4S7," Jules mentioned, "and I was his first VP9. It was great to see the card." He also had cards from Don W6BVM and Leon W6BYH from Delano, Jules's home town. On top of that was a Delano Amateur Radio Club certificate, #45, dated 23 of July, 1955, for working five of the club members.

One day, at John's home, Jules met Soma 4S7YL and her OM, Wick 4S7WA. They talked about DX and she presented Jules with an eyeball QSL card and a kiss on the cheek. Jules had also worked her when she was 8Q6AC in the Republic of Maldives.

Before Jules left Colombo, John took him out of town about 20 miles to the Voice of America transmitter site, one of several located in different countries around the world. Since Jules had only recently retired from the VOA in Delano, this was almost like being at home.

All visits to the various countries and islands must, sooner or later, come to an end. Many hams were met on Sri Lanka, and the memories will always be pleasant.

After the *Trader* set sail for the Maldives, Jules got on the air and worked some good DX. Contacts were made with KZ5KN, Canal Zone, and VP2MH, Montserrat. Another good QSO was held with Bill W7PHO, and later with Father Moran 9N1MM, in Nepal.

The *Trader* dropped anchor at 5:15 pm on Thursday, August 25, about a half mile off shore at Male, Maldives, an island group off the tip of India, and only a few degrees north of the equator.

One of the first things Jules did was to check about operating amateur radio from the island. A customs official told him that *no* radio transmissions of any type were allowed from the island or from a ship in the harbor. It was strictly prohibited. Jules was very disappointed.

With only 48 hours here, one might as well enjoy it, so Jules did a little shopping and sight-seeing. He also did some more snorkeling. He said the fish were very beautiful, and even got to touch some of them. The water was so clear one could see a hundred feet away.

On the last day in port, Jules went to the Telecommunications Department to see what the requirements were to get permission to operate here. Jules was "shocked" when Mohamed Ismail Maniku, Director of Telecommunications, gave him permission to operate in the Maldives. Jules asked Maniku if he would like to become a ham. He said yes. Jules said he would do everything possible to help him become an amateur radio operator.

Jules asked if other hams could operate from the island and was told that they could. There are no customs or great formalities necessary.

Jules could have received an 8Q call, but with only a few hours remaining before the ship left the island, there wasn't time to wait, so he was given permission to operate as W6YO/8Q. He worked all continents within two hours after returning to the ship and getting on the air. He would have liked more air time, but the ship was about to sail.

For the March, '77, issue of *73 Magazine*, I wrote the article "Pitcairn Island–an inside look at VR6TC." I mailed a copy to Jules and he received it in Tahiti. Before leaving the Maldives, he gave that copy to Maniku. I'm sure he read it from cover to cover.

The ship left at 4:00 pm and Jules worked a lot of stations en route to the Seychelles. He worked a PY, 9Y4, VK, and many Europeans, as well as many stateside contacts.

In issue #8 of the *Trader Tales* newsletter, Jules wrote: "Good ole Uncle Sam is at our service. Here around the Indian Ocean, GI 'hams' at Clark Air Force Base and the Subic Bay U.S. Navy base, both the Philippines, and with the U.S. Navy at Diego Garcia in the Chagos Archipelago, pass on to me the latest weather data for requested areas, gathered from weather satellites. In the Pacific, the Honolulu and Guam satellite service was even 'phone-patched' to me directly from, and to, the weather plotting station.

"In the Indian Ocean, this service was provided through the generosity of one particular amateur radio station, WA4RQK/VQ9. Jim, the operator there, has been most helpful; this is, I believe, because we are 'Yanks.'

"Another great service we have all around the world, and particularly here in the Indian Ocean, is the SEANET, which stands for South East Asia Net, with participating amateur radio operators surrounding the Indian Ocean, and a 'net control' station which supervises all 'hams' checking in, to offer any possible assistance over the air or to relay telephone calls. This net control station is being handled by a most outstanding and capable person by the name of Carl Reder S79R, who makes his home in Victoria on Mahe Island, Seychelles (our next port of call). Carl can instantly remember the 'handle' of any one he has contacted before, and there are several dozen stations who check in every evening."

Six days of sailing brought the *Trader* to Victoria, Seychelles. Jules met Carl and spent a great deal of time with him going to various places on the island. They visited a religious high-power shortwave broadcast station and Jules stated that the 300-foot towers and antennas were all out in the water — a very unusual setup. Jules even had the opportunity to watch some speedboat and yacht races. An unusual treat for an area such as this.

Time never stands still, so the time had come to depart from yet another island. After getting to sea, Jules made contact with Jim WA4RQK/VQ9 and received the weather report for their trip to Mombasa, Kenya. He also made contact with Ted 5Z4OT, in Nairobi, whom he hoped to visit upon arrival. He talked to Ray 5Z4PR, also in Nairobi, and was invited to stay at his place for a visit. He even gave Jules two phone numbers to call when the

ship docked. Another contact was with a Cape Town ham whom he will meet when the *Trader* arrives in South Africa.

Once every 24 hours while at sea during this around-the-world cruise, Jules had to take the wheel (helm) for two hours. One morning while doing so, he said, "We could hear birds chirping away. I was wondering, gosh, we're 500 miles away from land and a bird's here?" Later that morning, someone saw a bird up in Jules's antenna. All of a sudden it dropped and fell into the ocean alongside the ship. No one could understand what had happened until they looked up again and saw one of the bird's wings stuck in the antenna. Jules said, "It must have gotten wedged in one of the corners of the wire and fiberglass outrigger supporting the antennas."

No matter where you might be in this world, there is always time for being a volunteer instructor for Novice class students. The *Yankee Trader* on the high seas is no exception. Jules started a Novice code class with three students, and every afternoon at 3 o'clock he gave three-quarters of an hour of code practice. All of his students, at this stage of the trip, were very enthused about getting an amateur radio operator's license. Jules said they were doing pretty well.

When the *Trader* arrived at Mombasa, Kenya, many of the passengers headed for the interior to visit some of the preserves and parks. Jules headed inland, also.

When he took the bus to Nairobi, he had hopes of seeing 19,340-foot Mount Kilimanjaro in Tanzania, near the border of Kenya. Unfortunately, the weather didn't cooperate; it was overcast. The trip, some 300 miles, was on a narrow bumpy road. The dust was terrible. Jules expected to see numerous wild animals, but only a few were actually seen.

When he arrived in Nairobi he called Ron 5Z4RG, and later they met. Ron took Jules out to their coffee plantation where he meet Philomena 5Z4PG, Ron's XYL. He got some air time and had a long QSO with a close friend, Frank W6KPC, on 15 meters. Jules said, "He had a very good signal, but no other 6s were heard." He enjoyed a hot bath and delightful dinner Phil had prepared.

The next day, in downtown Nairobi, Jules met Ted 5Z4OT, and they had a very nice chat. While here in town, he said he walked so much just sightseeing that his feet became sore and swollen. He also took a four- to five-hour tour of a wild game preserve 20 miles from town. He left that night for the return trip to Mombasa and it rained most of the way back.

Jules had purchased an antique brass washbasin (he called it a spittoon) as a souvenir and was carrying it when the following occurred about a block from the gate to the docks:

"A fellow came up from behind me and grabbed for my wristwatch. With both hands, he pulled down, but I didn't have an expanding band and it wouldn't come loose. I gripped it and held on when it slipped to my hand. He pulled me over and I fell to the road, tore my trousers, and got a bruise on my knee. It scratched my wrist, too, from the sharp wristband. I swung at him with the spittoon, but I missed him. I'd liked to have dented his head with it. He ran across the street. Luckily, I got away without getting beaten up or having my wallet or camera stolen."

Jules reported the incident, but that's about all that could be done. It was quite an experience, especially when you're about to leave the country and head for another port.

This is Cape Agulhas, southernmost tip of Africa. The unusual feature is in the whitecap water seen between the rocks. It is the dividing point for the Indian Ocean on the left and the Atlantic Ocean on the right...

Two days out of Mombasa, the passengers were treated to what you might call "porpoises on parade." It was a spectacular display of porpoises, mostly in front of the ship. There were hundreds of them leaping in and out of the water in their acrobatic swimming and playful jumps.

Since the *Trader* arrived at Mutsamudu, Anjouan Island, Independent Comoros, in the evening, Jules decided to stay on board. The following day he took a bus tour of the island and saw many of the plants from which perfume is made. He even took a tour of a perfume factory where flowers are processed and a liquid is extracted from them. From this liquid, a perfume is made. "The tour," Jules said, "was quite enjoyable." That evening the ship set sail for an overnight trip to Mayotte Island, French Isles de Comoros.

When Jules was in Miami, he had asked the captain about stopping at the Comoros since it wasn't a scheduled stop. The captain said he was agreeable and would like to. In issue #9 of the *Trader Tales*, Jules wrote another short piece titled, "Perfume Islands Attract Ham Operator."

"The Comoro Islands were first called the Perfume Islands, for they attracted perfume merchants to buy the strong-scented oil extracted from the ylang-ylang tree flowers.

"Today, the islands have another attraction to the hams around the world: a rare island country. This inspired me to operate my radio equipment ashore in a small hotel overlooking the bay at Dzaoudzi, Mayotte. On September 26 and 27, in the wee hours of morning, during fair conditions, in less than five hours, I made 318 contacts, mostly with stateside stations. Many thanks from myself, and I'm sure from the lucky ones who made a QSO, to Yvon Seguineay for issuing me the license and call FHØYO, Al Fox, an American visiting Mayotte who helped in the operation, and especially Captain Paul Maskell, skipper of the *Yankee Trader*, for stopping here."

Long before the *Trader*

Mac ZS1LK and Jules W6YO beside the Yankee Trader, *docked in Cape Town, South Africa. Mac is one of many hams Jules met while here in this very beautiful country.*

to the ship, so the following day they shoved off for Cape Town, South Africa.

At this point in the trip, Jules mentioned that the three Novice students he had were doing pretty well—about 5 wpm on the code. They would be ready for their tests by the time the *Trader* reached South America.

The bands were very good here at sea. He had a QSO with Bill ZS1ER, whom he had contacted on other occasions. Jules planned on visiting Bill when the ship arrived in Cape Town.

Another contact was with a ham at 37,000 feet. It was Fred W7UKG/AM3 aboard a 747 en route from Seattle to Tokyo. He was somewhere between Alaska and Siberia. It was a good, long QSO.

"Oh, it was a beautiful sight," Jules said, "coming in to see Table Top Mountain, Lion's Head, Signal Hill, and the terrific skyline of Cape Town. The large buildings could be seen for miles and miles. It is just a tremendous-looking city. The harbor reminds you of Rio de Janeiro; kind of a round horseshoe bay. Fantastic! There were dozens of cranes about 200 feet high, and large tanker ships. You couldn't count them all. It was nice to get in."

It was Sunday morning, October 9, when the *Trader* moved up to a pier near the yacht club in Cape Town. "Believe it or not," Jules said, "on the dock was Bill ZS1ER. He was the first one to shake hands with me before we even had the gangplank down."

Bill, along with his XYL and two boys, took Jules down the coast to the Cape of Good Hope and Cape Agulhas, southernmost tip of Africa, for a nice view of the country. They had a really nice day and even drove to a hill and saw all the night lights of Cape

arrived at Mayotte, Jules had contacted Al VP2LOX/MM1 by radio and talked to him about getting a license to operate from the island. When the ship docked, Al was there to meet him. He had received the call of FHØFX for himself and FHØYO for Jules. They were all set for an amateur radio DXpedition.

After a stop to see Al's yacht and meet his XYL, Eva, they headed for the only local hotel (8-room) and started getting things ready for the special operation. They obtained a ladder to get up on the roof and dipoles for both 15 and 20 meters were installed. The low ends were tied to a rock down on the beach. Everything was set up out on the balcony.

The first QSO on 20 SSB at 1200 UTC (3:00 PM local time) as FHØYO, Mayotte, Comoro Islands, was W3NX, 5 × 7 both ways, followed by YBØAAU, W3LMA, and then W3KT. The first hour produced nearly 60 QSOs. Jules said he worked into Central America very well, but only picked up one station in Australia. It was Merv VK4MW, whom he had met several months earlier during a visit to that country. Most of the QSOs as FHØYO were on 20 meters; a total of 228 contacts were made.

Operation on 15 meters was with the call of FHØFX. There were 90 contacts made here before the band folded. Jules stated that most of the stateside contacts were from the 3rd, 4th, and 5th districts. He missed "Worked All Continents" by one: the one closest to his location — South Africa.

"I was working split, transmitting with an FT-101 down on 14.195 and tuning with the Atlas around 200 to 220. Later in the evening," Jules stated, "I was tuning above 275, still transmitting on 195.

"I even worked a station running 1 Watt; W8OK got me to stand by for him. The station was W8ILC. It was something. He was 3 × 2.

"Most of the reports we were giving were 5 × 7. We received some 20 over S9 reports, with 20 meters being much better in signal reports than 15."

I personally don't know if any other hams have gone to Mayotte and operated, but from the appearance and success of what Jules did, this sounds like an excellent spot for an extended DXpedition. The *Trader* was here for less than 24 hours and they did pretty well with what time was available, thanks to Yvon FH8CY, Director of Telecommunications, who was responsible for issuing the calls.

After leaving the island, the *Trader* sailed toward the Juan de Nova Island group in the Mozambique Channel. From there, they turned and headed for Tulear, Madagascar. When the ship arrived, Jules went into town but didn't do too much. The next day, officials restricted everyone

Town. On another day, Bill and his family took Jules up the coast for an all-day trip where he met Mac ZS1LK and family. Jules stayed at Mac's home and they got in a little air time. Mac is quite active on 2 meters as well as the HF bands.

Jules said Mac has a little two-year-old son, Jamie, who really took to him. He said, "We really made friends—the cutest little fellow you ever wanted to see."

Mac took Jules to the yacht club, where a lot of people asked him a number of questions since he was from the U.S. While they were there, "The first leg of the around-the-world yacht race from England came in," Jules commented. "There were some beautiful yachts."

Jules also met Dick W6OZ, the radio operator off a large freighter from New Orleans. Later, Jules took him aboard the *Trader* for a visit. They even had breakfast aboard Dick's ship one morning.

Another ham Jules met was Danie ZS1X. He went to his home which was right on the beach. A very picturesque location. Danie does a lot of experimenting with ham equipment. His XYL was about to get *her* ham license.

The word apparently got out about Jules being in Cape Town, and a lot of operators wanted to meet him personally. "I met quite a few hams. They always seemed to be coming around. There was," Jules commented, "a continuous stream of them."

Jules was impressed with the modern buildings in the city. He mentioned that they have modern freeways and overpasses. The train station is as beautiful and more modern than Jules had seen in the states. This is a very progressive city. The people were very polite and courteous. The shops had a very good selection of souvenirs. Jules even had a T-bone steak at the Town House, the first since leaving the states back in February. The dinner was a little over $4.00.

"The hams here were sure nice," Jules said, "particularly Mac ZS1LK and Bill ZS1ER." Mac came to see Jules off at 11 o'clock on October 21. They had some coffee out on the deck while having their final eyeball QSO. Mac was one of the last to leave the *Trader* before she set sail for St. Helena.

It was some 1,700 miles to Jamestown, St. Helena, from Cape Town, South Africa. Before the *Trader* arrived, she had sailed some 25,143 miles in this 10-month around-the-world cruise. For Jules Wenglare W6YO, it would be another adventure in yet another country. It would also be a location for another DXpedition for Jules as ZD7YO.

In three parts, I have covered eight months of travel with Jules aboard the *Yankee Trader* on the high seas and the ports of call visited. In part IV, the *Trader* will sail another 5000 miles and stop at another dozen locations. Jules will meet and participate with other hams in celebrating 40 years as a ham for Vic PY7AN in Recife, Brazil.

On the island of Carriacou, Jules eats part of an apple. Within a few minutes his mouth and throat began to burn. He later learns that it was poisonous. In fact, the toxic apple has been fatal to small children.■

New Products

from page 23

side-by-side on a small, 2-1/8" x 5" x 1-1/8" base of satin chrome with a black plastic top. The big difference between the QUIK-KEY and conventional keyer paddles is that it is manipulated by downward pressure, as with a straight key, instead of by horizontal pressure.

One of the problems I've always had with keyer paddles is that the way I bang away while sending, the paddle skates about on the operating desk. Short of screwing the paddle down solidly as I do with a straight key, I simply haven't been able to keep one in the same spot without holding it down with my other hand. To my delight, the QUIK-KEY has eliminated that problem. The combination of the weighted base and downward pressure when manipulating the keying levers makes for very stable operation. Even with the way I thump it about, the QUIK-KEY stays in place.

Another impressive feature of the QUIK-KEY is its physical appearance. Quality materials and precision machining make for smooth operation and good looks. Personalizing each paddle with the operator's call is a nice, attractive touch.

The QUIK-KEY is connected the same as other paddles and works with any keyer, including iambic ones. If you've been using a bug or conventional keyer paddle, you may find that it takes a while to get used to using the QUIK-KEY because of the vertical movement of the keying levers. Once you do make the transition, though, you'll undoubtedly be impressed by its operation. And if you go directly from using a straight key to the QUIK-KEY, chances are you'll wonder why you didn't switch sooner. Tension and finger spacing are adjustable.

Of course, some operating surfaces will provide better adhesion than others, but in using the QUIK-KEY on a variety of surfaces it was always much more stable than either of my conventional keyer paddles, mostly by the proverbial country mile.

The QUIK-KEY may be ordered direct for $39.95 plus $2 postage. *QUIK-KEY, PO Box 73, Katonah NY 10536*. Reader Service number Q6.

Morgan W. Godwin W4WFL
Peterborough NH

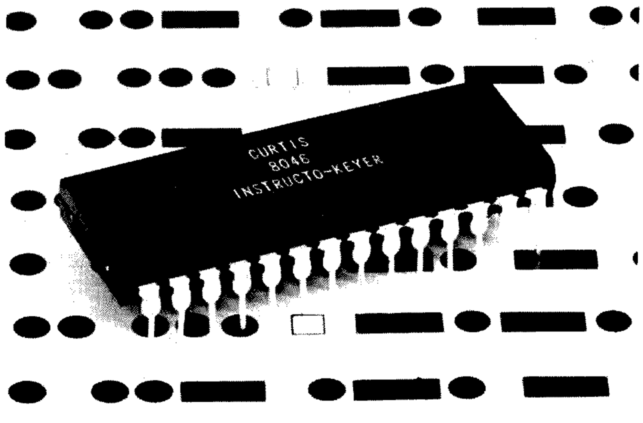

The new 8046 28-pin CMOS IC from Curtis.

SINGLE IC SPEAKS RANDOM MORSE

Using the new Curtis 8046 28-pin CMOS QSLI (Quite Large Scale Integration) IC, you can construct a random Morse code practice generator with features similar to the popular IK-440A Instructokeyer.

The 8047 requires one external 256 x 4 ROM (Read Only Memory) and an 8043- or 8044-based keyer to provide completely random Morse characters for speed improvement practice from 6 to 50 wpm. Output is either alphabet-only (Novice practice) or alphanumeric with punctuation. A typical sequence might look like this: "Q, TSA LVT-BEVYL Z/A EE 73D."

Variable extended spacing between letters and letter groups is also provided for slow speed study (characters at 13 wpm, words at 6 wpm, for ex-

Continued on page 158

Whither Microcomputers?

—a pro looks ahead

Charlene Babb Knadle WB2HJD
316 Vanderbilt Parkway
Dix Hills NY 11746

Computers are definitely the wave of the future. So says Hans Napfel WB2ZZB, who should know. Not only does he work with them at Fairchild, where he oversees 28 people, most of whom are engineers, but he also has been studying them since the early 60s at home, through all stages of their development. And he knows what applications are planned for them in the foreseeable future. No one, he says, can be unaffected by computers. They are a part of everyone's life, and this will be increasingly true.

Hans designed and built a small "dedicated" computer (one restricted to performing certain functions) in 1973. It was built with the best components available at the time—resistors, transistors, capacitors, and some integrated circuits—and had no microprocessor (a group of integrated circuits formed into a single component). But most amateur computing did not really begin until more than a year later, when 8008s—the first microprocessing chips—appeared on the market. Now amateur computing is a rapidly-growing hobby, one which Hans nevertheless believes is still in its infancy. (The fact that the "Personal Computing '77 Trade Fair" at Atlanta drew 140 exhibitors and more than 5,000 people on its first day bears this out.)

The personal computer is industry's answer to the general demand for involvement with computers. It is diminutive in size, can read from already-prepared tapes to carry out a program, or the operator can write in his or her own programs.

Technical people will find computers extremely useful as a tool, Hans believes. Indeed, it was Hans's technical needs as a radio amateur that created his interest in computers and caused him to begin working with them. "Now," Hans says, "my computer runs my radio station." Not the limited-function computer of 1973, but a second model, built in 1975, which Hans affectionately calls "The Blue Max." It is a general computer, programmable for many things. The Blue Max (which is named for its attractive azure front panel) takes up less than a square foot of space (quite a contrast from the behemoths of the sixties, which were also awkward to use). Max can provide automatic-repeat CW when Hans wants to run a test. It makes contact with a

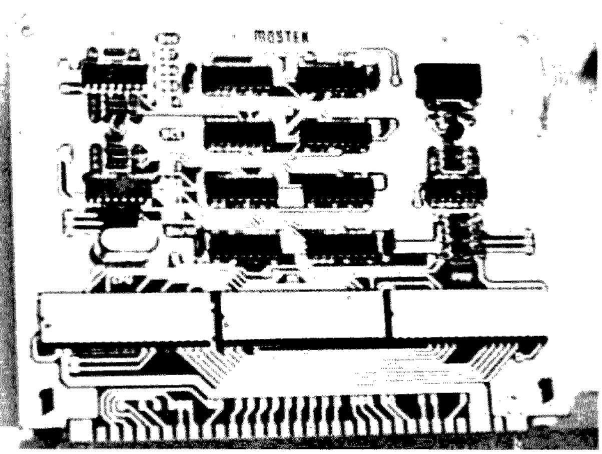

A commercial microprocessor. This type of simple computer will soon monitor the condition of your car.

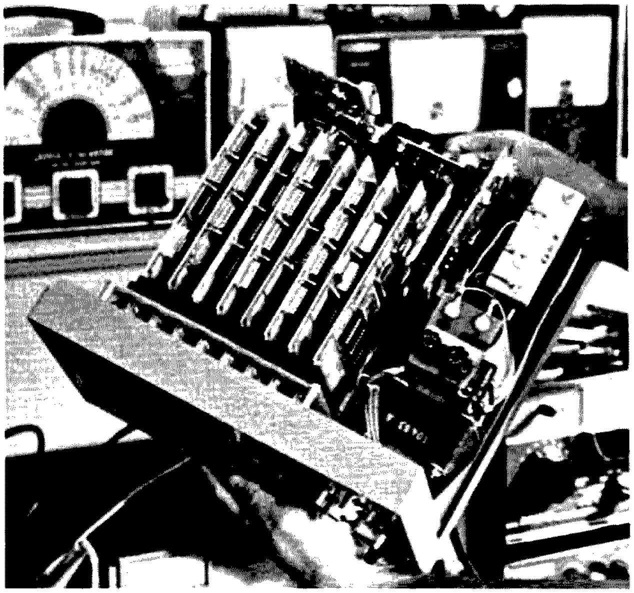

Inside "The Blue Max."

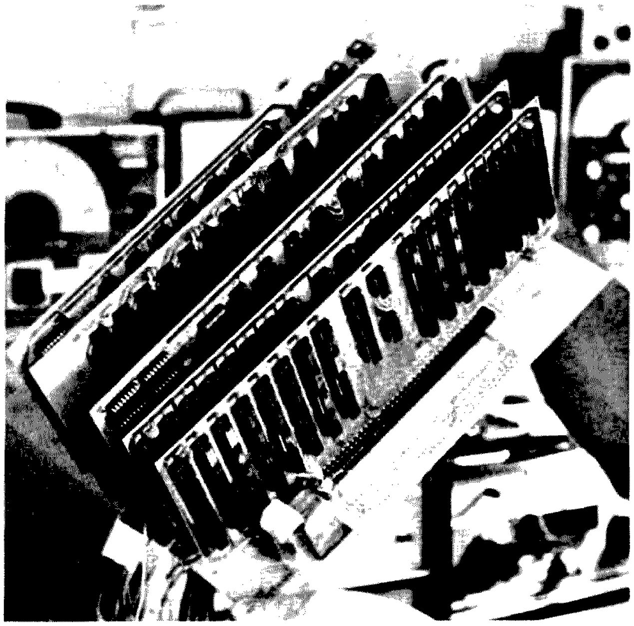

The uncompleted new computer, containing $2000 worth of modified commerical boards.

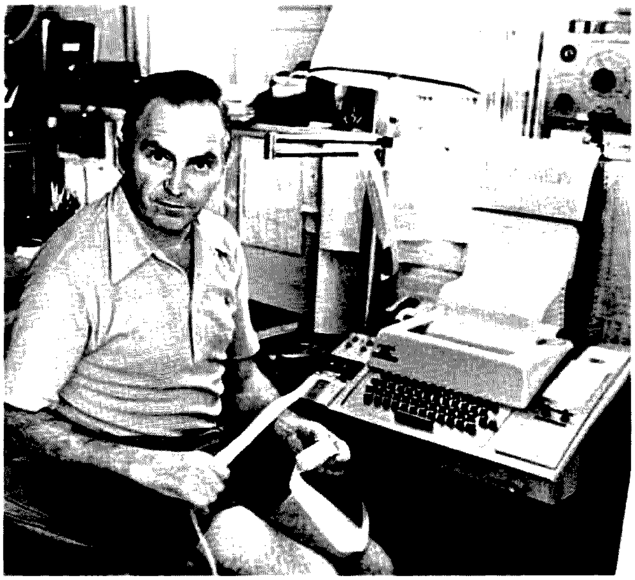

Hans's computer terminal Model 33 ASR punches out a taped program.

friend on schedule, with or without Hans's presence, and records the Morse code answer received, which it prints, in words, either on the attachable television screen or by radioteletype, or both, as Hans has instructed. It prints the received message at exactly the same speed as the sender gives it.

Hans's computer is helpful to him in other ways with amateur radio. It keeps track of his QSLs for him so that he does not have to wonder whether the contact he's just made should be asked for one. (A bulging QSL file shows why this is helpful!) It keeps track of call-letter changes. And it can be asked to print out all the "Charlies," all the W5s, or whatever.

Indeed, with a capability of handling 200,000 full instructions (not bits) per second (yes, that's per *second*), Hans's computer can be asked to remember anything. Hans uses it during contests to keep his log and to eliminate duplications in the log. "It is also useful for field days," he says, "to keep you from repeating stations worked."

Hans also recommends computers as a good way to practice Morse code. For not only does the computer send perfect code every time, at whatever speed you desire, but it also can show you the dots and dashes on screen simultaneously, thus giving you the benefit of involving two senses instead of just one. And it can be programmed to increase the speed gradually, if you wish.

There are other interesting computer applications for the radio amateur. For instance, the moonbouncer will find it "indispensable," Hans says, to keep the antenna positioned at the moon. When a ham with a parabolic dish is not at home, a computer can sense the weather and wind and rotate the dish for the least amount of wind resistance.

Hans and three of his friends are working on an even better computer than The Blue Max. It, too, is homemade, but is composed of commercial boards that the four men have modified. (For Max, Hans designed even the routine things.) Hans and his friends are taking care to program their computers the same way and with the same language (they have settled on "super BASIC"), so that they can exchange programs and communicate with each other effectively. The computers can use audio cassettes as well as paper tape. Punch cards, Hans says, are almost obsolete in personal computing. (In addition to paper tape and punch cards, Hans's computer can work from a "floppy disk," with the addition of a floppy bit memory unit. This attachment records information on a flexible record called a "floppy disk," and thus gives Hans quick access to what is now peripheral-memory material, freeing space in the computer's central memory. These disks, too, are transferable—easily mailed.)

When this system is complete, Hans says, it will not only run his radio station, but his whole house as well. Already, Max organizes important dates for him. It tells him when to pay certain bills; it will monitor the water temperature and control the pump and filter of his in-ground backyard pool; it tells him when to send birthday and anniversary cards and when to buy gifts. How does it do this? Not by waiting for Hans to call up its memory. When Hans looks into his conveniently-located ham room each morning, there is the day's message right on the screen—blinking to get his attention.

"A computer can handle anything to do with numbers," Hans says. "Using it unclutters your memory and makes life easier." Indeed. If Hans should be late for a class or fail to acknowledge an occasion, it will not be because he was not informed! Max lets him know the flagging date—the day it is necessary to know—if an event is coming up. And Hans can call for a review of the coming month, if he so desires.

The computer is also useful as a telephone directory. It may take a few hours to prepare the program, but to update it later

As Hans taps out instructions, they appear on the screen at the top of the rack. Simultaneously, the Teletype™ machine on the left makes a printout.

will only take seconds. And you can get the number by first name only, last name only, or even by call letters.

Having a computer in the home can be beneficial to non-hams, too. Hans's twelve-year-old daughter, Claudia, uses it for games, for educational math workouts, and to make musical programs. She will soon have a remote terminal in her room. There is already a remote unit in the kitchen, where Hans's wife, Lisa, bones up on her French.

But the computer can do more. It can adjust the thermostat in the house, for instance. It could even be made to do this "intelligently," by monitoring the outside and inside temperatures and "deciding" how to adjust the inside accordingly. This could be important when one is away, especially in winter when pipes could freeze, but when an Indian summer could allow a lower-than-usual inside temperature. The computer could also be made to turn lights on and off, water plants, feed the dog, play music, and control air conditioning.

The family car will not be unaffected by computers. "In the next two years," Hans says, "cars will have computers to control gas mileage (by noting speed vs. vacuum vs. temperature and keeping the car running at maximum efficiency by optimizing the fuel mixture) and to monitor the condition of the car (letting you know if a light is not working, for instance). In fact, a few cars even have computers now." Signals to the driver will be shown on one light-emitting-diode display, not by means of six or eight meters as we now often see in a car. A computer-controlled warning system will sound a buzzer to alert a speeding or sleeping driver (erratic wheel movements will indicate that the car has left the pavement).

Computers will eventually revolutionize grocery shopping. One could make selections at home, visually (even comparing prices from store to store, right at your own kitchen terminal), and then go to the store to pick up the waiting order. Or it could be delivered to your door. Food, by this system, could be dispensed directly from warehouses. And computers (microprocessors) already control microwave ovens and teaching machines.

But computers will never make it big in the classroom, Hans feels, because "teachers are too threatened by machines. Machines are potentially authority-shattering. What if something goes wrong that the teacher can't fix?" Still, Hans feels that computers could be used by schools successfully as tutors for drill and routine work, if they are housed in a separate room overseen by a competent technician. "But they will never replace teachers," he says.

For handicapped people, they will be especially important, Hans says, becoming the ears of deaf people and eyes of the blind. Already, speaking computers like the one owned by Pete Motyl K1PXE can be purchased. And in the health field, they are already indispensable, but will become more so.

"And by 1985 or 1990, every house will have its own minicomputer," Hans says. It will be used as an "intelligent" security system (those who live in each house will not set off the alarm), as a telephone answering service and directory (indeed, all forms of paper directories may soon be obsolete), as well as for energy management, bookkeeping, scheduling, providing educational drill, and playing games.

"What about using them to communicate with outer space?" I asked Hans.

His eyes twinkled at the unexpected thought.

"They would be essential in a space colony," he answered, "to monitor the station's life-support system and relative positions, and to keep track of supplies. But to communicate with other intelligences in outer space? Let me put it this way: I'm a hardware realist."

For Hans, that's not a limitation. "I keep up with what's being discovered," he says, "and I just take it one step further. That's what makes the difference." In fact, Hans advances the state of computer art through his hobby, then takes his knowledge to the job, where he educates others.

In a pursuit requiring perseverance and thoroughness, Hans's philosophy is clearly the one that works. ■

SSTV Meets SWTPC: Part 2

—micro-enhanced pictures

Clayton W. Abrams K6AEP
1758 Comstock Lane
San Jose CA 95124

In the first part of my article, I acquainted you with the hardware and the basic concepts. Now, let's discuss the software.

The software was the most complex part of the project, but the most fun. I think the most important point I should make is that the software is a replacement for hardware logic. The use of software is more repeatable and reliable than hardware logic.

Another point is that the timings are very critical. If you try to execute this program on another 6800 system without a 1.7971-MHz clock crystal, changes will have to be made. I will identify the memory locations which will have to be altered. If the clock is much slower than the SWTPC, the program may not work.

The programming was written with a top-down approach, with the extensive use of subroutine calls (JSR and BSR). The frequent use of up to 4 nested subroutines was used. This makes the program easier to write, debug, and change. Additionally, self-modifying code was used. If you plan to install this program on PROM, don't—unless you plan to execute it elsewhere in RAM memory. Self-modifying code means that as the program executes, it changes itself. This type of code is difficult to debug, but the end result is that a program can be written to run in less memory. All subroutines using self-modifying code restore themselves upon completion. So don't hit reset in the middle of an operation unless you are willing to reload the program.

Another concept used is to call certain routines frequently. This also makes sense and saves memory. A typical routine called frequently is DEL2 which is a program delay which is used to transmit pixels. A few large blocks of memory were left free for expansion. Fig. 1 shows how memory is organized. Locations below address 101 were left free because of the direct addressing capability of the 6800. This could be very useful in future enhancements.

I will discuss each of these routines on an individual basis, and explain how the algorithms work. But first, a few basic concepts should be discussed.

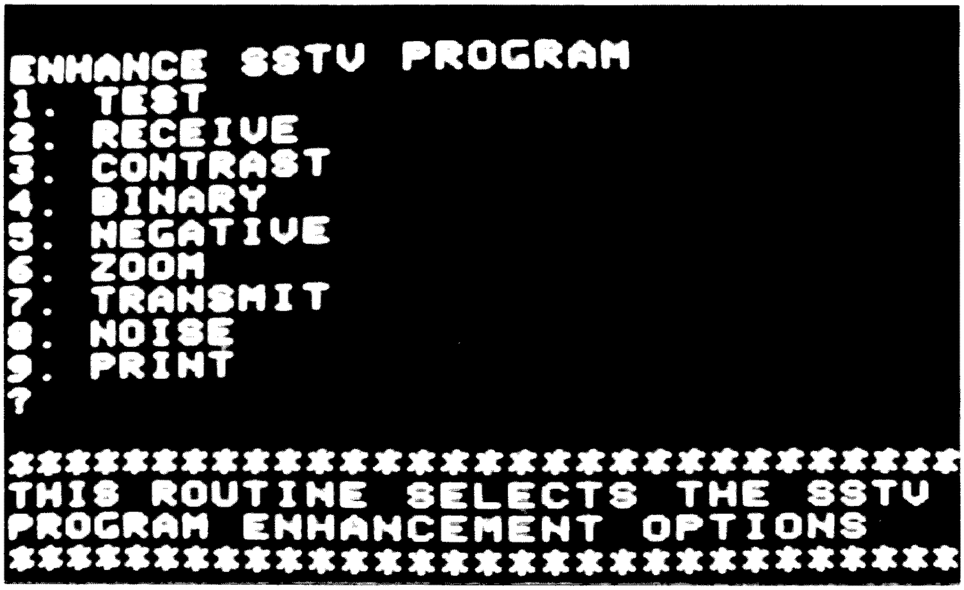

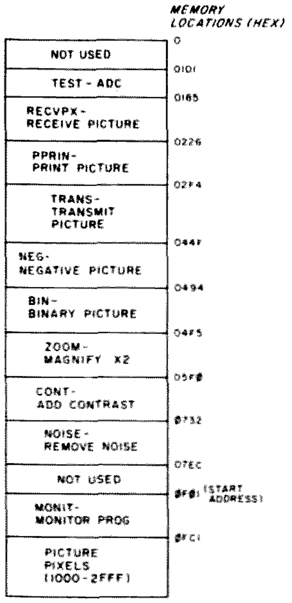

Fig. 1. SSTV program memory map.

Programming Concepts

The most important concept to understand is the programming format of the analog interface. Fig. 2 shows the bit structure of the PIA ports, and which bits are used to control various functions. As you can see from the format, the program will only function properly with the hardware connected to correct PIA bits as shown in Fig. 2. The other concept which must be understood is the format of the pixels in memory. These concepts are used throughout the subroutine descriptions and must be understood to code the program in another language.

Subroutine Descriptions

The following is a description of each major subroutine used. The routines will be referred to by their program label.

Test

This routine is by far the easiest to understand. This routine can be used by entering an analog input into the special analog card. If you apply 0 volts and hit a number key on the computer keyboard, a zero should appear on the TV screen. Also, an SSTV frequency of 1500 Hz should be generated. If 4.9 volts is applied to the card, an F will appear on the TV screen, and a 2300 Hz frequency will be generated when a number key is pressed. If a nonnumeric key is pressed, the program will return to the monitor. The flowchart for this routine is shown in Fig. 3.

PPRIN

This routine prints an ASCII character picture of the pixels in computer memory. The program is written for the SWTPC PR-40 printer. This printer has only 40 columns. In order to print a complete SSTV picture, 120 columns were printed on three pages, and every other line (64). When these three pages are joined together, a complete picture was formed. A total of 7 characters was printed, which represent the 16 gray levels of a picture. I'm sure the character selection can be improved upon. The selection was subjectively chosen, with little experimentation. One point was clear: A character for each gray level was not the way to go. This technique produced poor picture quality. Fig. 4 shows a flowchart of PPRIN. Table 1 is a list of gray level vs. character and memory location. This table allows the user to experiment with the various ASCII codes.

TRANS

This routine is used throughout the program to transmit regular and enhanced SSTV pictures. The routine is easy to use. Once selected, a message appears on the screen which asks for a keyboard response of 0 to F, where 1 to F will be the number of

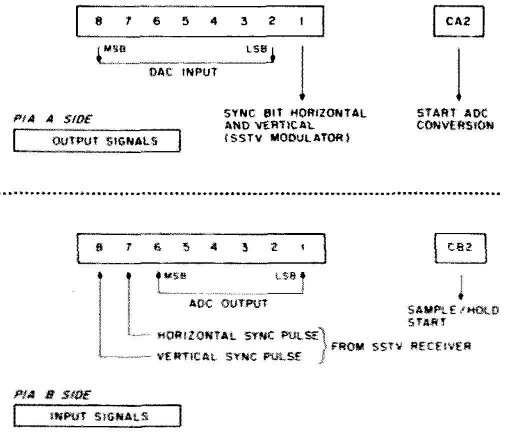

Fig. 2. SSTV enhancement program programming format.

pictures transmitted. If 0 is selected, the picture memory buffer will be filled with a gray-scale pattern of 16 gray levels. These gray levels will appear as vertical bars on the SSTV monitor. This allows the receiver to adjust his contrast and brightness. After memory is loaded, the next message asks for the number of loops for the transmission. The response should be 1 to F, where F is 15. This routine assumes the 60-Hz SSTV video will be transmitted. For those of you who wish to transmit 50-Hz video, the delay constant at location 01C9 should be changed from 20 hex to 10 hex.

This routine uses self-modifying code, and six NOP instructions were assembled into the program. These NOP are modified by other routines to enhance pixels and allow a minimum duplication of code. Fig. 5 shows a flowchart of the most important transmit routine. A total of 7 subroutines are used during the transmission of a picture.

RECVPX

This routine receives slow scan pictures pixels and places them into memory. The routine is simple to use. Once the option is selected, the first message which appears on the screen asks if you wish to

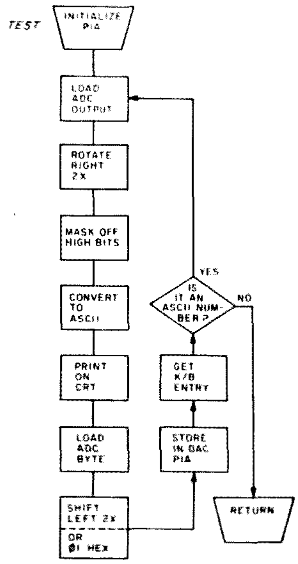

Fig. 3. TEST routine. Test analog card routine flowchart.

Memory Location	ASCII Code	Print Character	Gray Level
231,2	23 23	#	F,E
233,4	4F 4F	O	D,C
235,6	5C 5C	/	B,A
237,8	2A 2A	*	9,8
239,A	3D 3D	=	7,6
23B,C	3A 3A	:	5,4
23D,E	3A 20	: space	3,2
23F,240	20 20	space	1,0

Table 1. Gray level vs. ASCII character value.

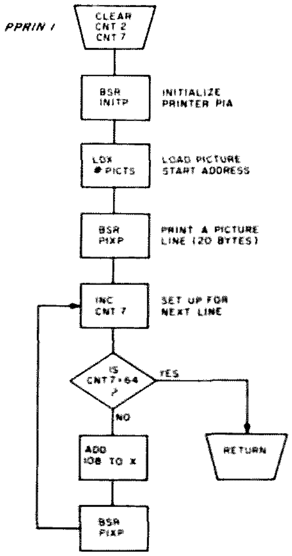

Fig. 4. PPRIN routine. Print a SSTV picture flowchart: CNT 2 = pixel counter and CNT 7 = line counter.

receive 50- or 60-Hz video. Your response should be 50 or 60. Upon the detection of a vertical sync pulse by the program, the 8K of memory will be loaded with 16k pixels in 8.3 seconds. One point should be noted: The program assumes that 128 lines will be received. If the picture received has less, the program will continue to receive video until memory is filled. Therefore, part of the top of the next picture will be in memory if the original picture has less than 128 lines.

Fig. 6 shows the main receive routine. This function is easily accomplished by modifying the code in TRANS to execute a 1's complement of each pixel before it is transmitted. The transmit routine is then executed and negative pictures are produced.

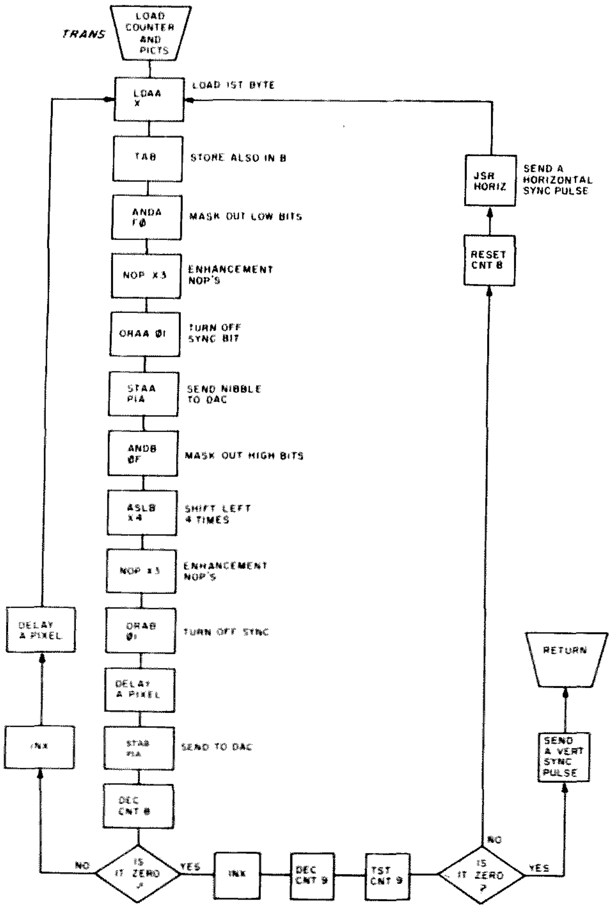

Fig. 5. TRANS routine. Transmit a SSTV picture flowchart: CNT 8 = pixel count (64) and CNT 9 = line count (128).

Upon completion of this routine, the code is restored to NOPs in TRANS. As a result, the picture in computer memory is not altered.

BIN

This routine produces binary pictures. Binary pictures are a reduction of the 16 gray levels pixels to 2. If the pixel in memory is 8 or higher, an F gray level is transmitted. If the level is 7 or lower, a 0 is transmitted. The routine like BIN modifies the code in TRANS to jump out of the routine, modify the pixel to 0 or F, and transmit it. The code is restored after execution to NOPs. If you wish to experiment with the gray level clip level, the code at locations 04D8,E7 can be changed from 80 to another value. Computer memory is not altered by the use of this routine.

In both BIN and NEG, the program asks for the number of picture loops between 1 and F. If you respond with a zero, the program will loop 255 times. To recover from this condition, hit reset and load a low ASCII number into CNT 10 (02F4). Then type G, and the program will return after the count you have just entered is decremented to zero.

ZOOM

Zoom was one of the most interesting routines to code. This routine allows selection of 5 locations of the picture which will be magnified by a factor of 2. The locations are selected by answering a TV message with the computer keyboard by selecting 0 to 4. This zoom capability allows magnification of any portion of the SSTV picture without the use of complex hardware which is used in commercial systems. The zoom locations on the picture are selected in the program by loading the index register with the upper left hand corner pixel address and branching to the TRZ routine (056D). The following demonstrates how it works:

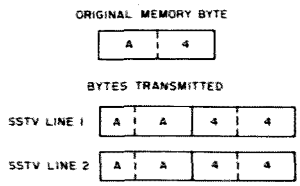

As you can see, all that is required is to transmit each pixel twice and then transmit the same pixel line in memory again. The resultant picture shows contouring, but this can be expected.

The memory locations, picture locations, and hexadecimal values are listed in Table 2. By simple program changes, you can experiment on where you would like to zoom in on the picture. This routine calls six other routines, and Fig. 7 shows the TRZ routine which is the main routine. Computer memory is not altered as a result of execution of this routine.

CONT

CONT is a routine which adds contrast to the SSTV picture. The routine functions best when the picture is very dark and contains few white areas. The routine makes the picture lighter, and if a high-contrast enhancement is selected, a binary effect will be achieved.

When the routine is selected, the first selection will be the number of transmit loops after enhancement. After this selection, the number of times of enhancement is selected (2 to F). Fig. 8 illustrates the computer algorithm used. The routine first finds the darkest pixel value in a routine called FIND. This routine scans 10 lines in the center of the picture for the darkest pixel value. The

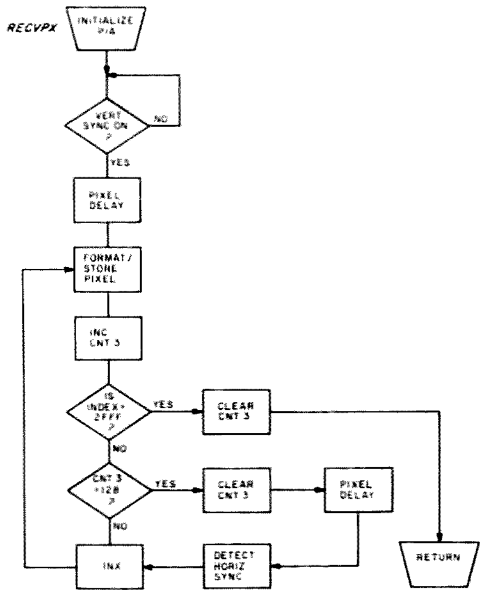

Fig. 6. RECVPX routine. Receive an SSTV picture flowchart: CNT 3 = pixel count.

Fig. 8. Enhancement selection.

dark routine then subtracts this value from almost all of the 16k pixels in memory along with multiplying the results by the enhancement number selected. This new value is compared to see if it is greater than F. If so, an F is placed in memory. If it is less than F, the results are placed in memory.

The bottom 8 lines of the picture are not enhanced, and since many pictures are generated by scan converters, this area was left alone. Fig. 9 is a flowchart of the dark routine which shows how some of the calculations are made.

NOISE

This routine removes random noise from the SSTV picture received. This is accomplished by an averaging technique. Pixels, as received by the microprocessor, are averaged together with those in memory. By use of this technique, random noise can be reduced by the square root of number of pictures received. When executed, this routine asks first for the number of noise pictures to be received. A value of 1 to F can be selected. The program will then ask for a selection of 50- or 60-Hz video. The response to the query should be 50 or 60.

This routine also calls 4 other routines and the main line routine is contained in Fig. 10. This routine is similar to RECVPX in operation, except for the averaging routines. Since more computer overhead is used, different delay constants were selected.

MONIT

This routine is used to select the program options. Upon completion of each routine, the program jumps back into MONIT. The program should be started at the beginning of this routine (0F01). This is accomplished by loading A048,9 with 0F01 and typing G. When this is done, a menu will appear on the TV screen. The routine calls INIT (01B6) initializes

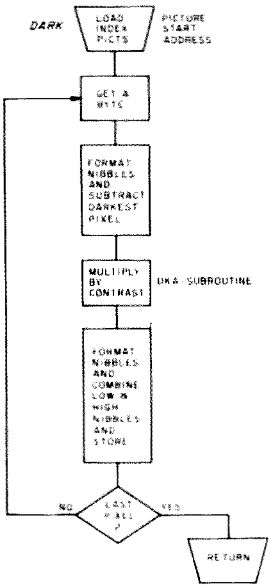

Fig. 9. DARK Routine. Calculate a new pixel contrast level flowchart.

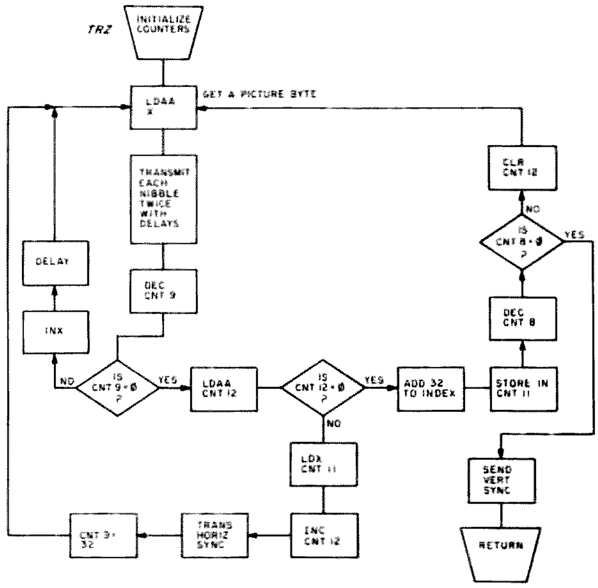

Fig. 7. ZOOM Routine. Transmit a SSTV picture with a 2 X magnification flowchart: CNT 8 = 64 lines/picture, CNT 9 = 32 bytes/picture line, CNT 12 = line count storage, and CNT 11 = index register storage.

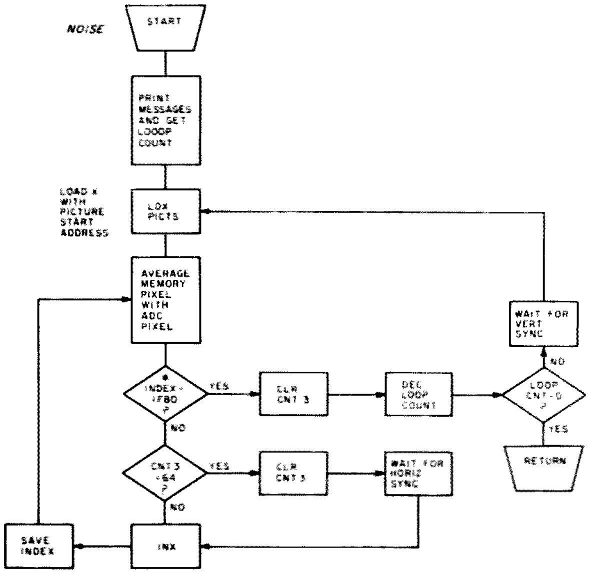

*Fig. 10. NOISE Routine. Receive successive SSTV pictures and average flowchart CNT 3 = pixel counter. *Value was fine-tuned due to program overhead.*

SSTV Enhancement Program Object code.

```
0100 00 BD 01 B6 8D 22 46 46 84 0F 8D 41 8D 4B B6 01
0110 27 48 48 84 F0 8A 01 B7 80 10 BD E1 AC 84 F0 81
0120 30 27 E1 7E 0F 01 04 00 FF 01 F1 CE 80 10 86 3F
0130 A7 03 86 37 A7 03 86 38 A7 01 86 30 A7 01 B6 01
0140 26 8D 01 CD A6 02 B7 01 27 FE 01 F1 39 84 0F 8B
0150 30 81 39 23 02 8B 07 39 00 B7 01 58 CE 01 6C BD
0160 E0 7E B6 01 58 BD E1 D1 B6 01 58 39 10 16 53 41
0170 4D 50 4C 45 20 41 4E 41 4C 4F 47 20 53 49 47 4E
0180 41 4C 0A 0D 04 00 7F 01 85 BD 06 F7 BD 02 15 CE
0190 10 00 86 08 8D 37 8D 3D 7C 01 85 8C 2F FF 27 0A
01A0 F6 01 85 C1 40 27 06 08 20 EC 7E 0F 01 7F 01 85
01B0 8D 18 8D 3F 20 F1 CE 80 10 86 FF A7 00 86 30 A7
01C0 01 4F A7 02 86 37 A7 03 39 20 B6 01 C9 4D 27 03
01D0 4A 20 FA 39 00 BD 01 28 49 49 84 F0 B7 01 D4 86
01E0 29 8D EA BD 01 28 46 46 84 0F F6 01 D4 1B A7 00
01F0 39 00 00 FF 01 F1 CE 80 10 A6 02 84 40 27 0A C6

0200 0F 5D 27 0D 5A 8D C3 20 F8 A6 02 84 40 27 FA 8D
0210 B9 FE 01 F1 39 36 B6 80 12 84 80 27 F9 B6 80 12
0220 84 80 26 F9 32 39 00 00 8D 17 8D 39 8D 49 7E 0F
0230 01 23 23 4F 4F 5C 5C 2A 2A 3D 3D 3A 3A 3A 20 20
0240 20 7F 02 26 7F 02 27 8D 79 CE 10 00 8D 3B 7C 02
0250 27 B6 02 27 81 40 27 0C 86 6C B7 02 E3 BD 02 E4
0260 8D 27 20 EA 39 7F 02 26 7F 02 27 8D 60 8D 5E 8D
0270 5C CE 10 15 8D D6 39 7F 02 26 7F 02 27 8D 4E 8D
0280 4C 8D 4A CE 10 29 8D C4 39 A6 00 08 7C 02 26 8D
0290 0F B6 02 26 81 14 27 02 20 EF 7F 02 26 39 00 00
02A0 FF 02 9E 16 44 44 44 44 B7 02 AF CE 02 31 A6 00
02B0 C4 0F F7 02 B6 E6 00 37 8D 15 33 17 8D 11 FE 02
02C0 9E 39 CE 80 18 C6 FF E7 00 C6 3F E7 01 86 0D CE
02D0 80 18 A7 00 C6 37 E7 01 C6 3F E7 01 6D 01 2A FC
02E0 E6 00 39 00 4F F6 02 E3 F7 02 EE 08 4C 81 00 27
02F0 02 20 F8 39 00 CE 03 25 BD E0 7E BD E1 AC 81 30

0300 27 12 BD 04 3F B7 02 F4 8D 6E 7A 02 F4 7D 02 F4
0310 27 10 20 F4 BD 03 FC CE 03 5D BD E0 7E BD E1 AC
0320 20 E0 7E 0F 01 10 16 4C 4F 4F 50 20 50 49 43 54
0330 2E 20 4F 52 20 47 52 41 59 20 53 43 41 4C 45 0A
0340 0D 30 3D 47 2E 53 2E 2C 4C 4F 4F 50 20 50 49 43
0350 54 28 31 20 54 4F 20 46 29 0A 0D 3F 04 10 16 45
0360 4E 54 45 52 20 4C 4F 4F 50 53 28 31 20 54 4F 20
0370 46 29 0A 0D 3F 04 00 00 8D 40 CE 10 00 A6 00 16
0380 84 F0 01 01 01 8A 01 B7 80 10 C4 0F 58 58 58 58
0390 01 01 01 CA 01 BD 04 33 F7 80 10 7A 03 76 7D 03
03A0 76 26 12 08 7A 03 77 7D 03 77 26 03 8D 33 39 8D
03B0 0E 8D 13 20 C8 08 8D 7B 20 C3 86 80 B7 03 77 86
03C0 40 B7 03 76 39 5D 4F B7 80 10 86 04 F6 03 C5 5A
03D0 5D 27 02 20 FA 4A 4D 27 02 20 F1 86 01 B7 80 10
03E0 39 4F B7 80 10 86 1E F6 03 C5 5A 5D 27 02 20 FA
03F0 4A 4D 27 02 20 F1 86 01 B7 80 10 39 CE 10 00 7F

0400 03 76 7F 03 77 86 FF 8D 20 80 11 7C 03 76 F6 03
0410 76 C1 10 27 02 20 F0 7C 03 77 F6 03 77 C1 80 27
0420 05 7F 03 76 20 DF 7E 03 17 C6 04 A7 00 08 5A 5D
0430 26 F9 39 36 B6 01 C9 4D 27 03 4A 20 FA 32 39 37
0440 16 C4 F0 C1 40 27 04 84 0F 20 02 80 37 33 39 86
0450 43 B7 03 82 CE 84 F0 FF 03 83 86 53 B7 03 90 CE
0460 C4 F0 FF 03 91 CE 03 5D BD E0 7E BD E1 AC 8D CF
0470 B7 02 F4 BD 03 78 7A 02 F4 27 02 20 F6 86 01 B7
0480 03 82 B7 03 83 B7 03 84 B7 03 90 B7 03 91 B7 03
0490 92 7E 0F 01 86 7E B7 03 82 B7 03 90 CE 04 D7 FF
04A0 03 83 CE 04 E6 FF 03 91 CE 03 5D BD E0 7E BD E1
04B0 AC 8D 8C B7 02 F4 BD 03 78 7A 02 F4 27 02 20 F6
04C0 86 01 B7 03 82 B7 03 83 B7 03 84 B7 03 90 B7 03
04D0 91 B7 03 92 7E 0F 01 81 80 23 02 20 04 4F 7E 03
04E0 85 86 F0 7E 03 85 C1 80 23 02 20 04 5F 7E 03 93
04F0 C6 F0 7E 03 93 00 00 CE 03 5D BD E0 7E BD E1 AC

0500 BD 04 3F B7 02 F4 CE 05 4E BD E0 7E BD E1 AC 81
0510 30 27 12 81 31 27 13 81 32 27 14 81 33 27 15 81
0520 34 27 16 20 E1 CE 10 00 20 12 CE 10 20 20 0D CE
0530 18 10 20 08 CE 20 00 20 03 CE 20 1F FF 04 F5 8D
0540 2C 7A 02 F4 27 05 FE 04 F5 20 F4 7E 0F 01 10 16
0550 53 45 4C 45 43 54 20 5A 4F 4F 4D 20 41 52 45 41
0560 20 28 30 2D 34 29 0A 0D 3F 04 00 00 00 8D 50 FF
0570 05 6A A6 00 B7 06 5B 8D 54 BD 04 33 8D 4F BD 04
0580 33 8D 55 BD 04 33 8D 50 7A 03 77 27 06 08 BD 04
0590 33 20 DF B6 05 6C 81 01 27 0D FE 05 6A 7C 05 6C
05A0 BD 03 C6 8D 22 20 CB 8D 3E FF 05 6A 7A 03 76 27
05B0 0A 8D 14 BD 03 C6 7F 05 6C 20 B7 BD 03 E1 39 7F
05C0 05 6C 86 40 B7 03 76 86 20 B7 03 77 39 B6 06 5B
05D0 84 F0 8A 01 B7 80 10 39 F6 06 5B C4 0F 58 58 58
05E0 58 CA 01 F7 80 10 39 37 C6 21 08 5A 26 FC 33 39
05F0 CE 06 29 BD E0 7E BD E1 AC 81 30 27 F3 81 31 27

0600 EF BD 04 3F 4A B7 06 5A CE 03 5D BD E0 7E BD E1
0610 AC BD 04 3F B7 02 F4 BD 06 A3 8D 40 BD 03 78 7A
0620 02 F4 27 02 20 F6 7E 0F 01 10 16 45 4E 54 45 52
0630 20 43 4F 4E 54 52 41 53 54 20 49 4D 50 52 4F 56
0640 45 4D 45 4E 54 0A 0D 58 20 54 49 4D 45 53 28 32
0650 20 54 4F 20 46 29 0A 0D 3F 04 00 00 CE 10 00 A6
0660 00 16 C4 0F 44 44 44 44 B0 06 A1 F0 06 A1 F7 06
0670 A2 8D 1C B7 06 5B B6 06 A2 8D 14 16 B6 06 5B 48
0680 48 48 48 1B A7 00 08 8C 2C FF 27 02 20 D1 39 F6
0690 06 5A B7 06 96 8B 00 5A 26 FB 81 0F 23 02 86 0F
06A0 39 00 00 7F 06 A2 7F 07 32 7F 07 33 86 0F B7 06
06B0 A1 CE 18 10 A6 00 16 C4 0F F7 06 A2 44 44 44 44
06C0 F6 06 A1 11 22 03 B7 06 A1 B6 06 A2 11 22 03 B7
06D0 06 A1 08 7C 07 32 B6 07 32 81 20 27 02 20 D5 7F
06E0 07 32 7C 07 33 B6 07 33 81 0A 27 0A 86 20 B7 02
06F0 E3 BD 02 E4 20 BE 39 CE 07 20 BD E0 7E BD E1 AC

0700 81 35 27 06 81 36 27 0D 20 ED 86 20 B7 01 E0 86
0710 13 B7 07 E6 39 86 29 B7 01 E0 86 18 B7 07 E6 39
0720 10 16 35 30 20 4F 52 20 36 30 20 48 5A 20 3F 20
0730 04 00 00 00 7F 01 85 CE 07 98 BD E0 7E BD E1 AC
0740 81 30 27 F0 BD 04 3F B7 02 F4 8D AB CE 10 00 BD
0750 02 15 FF 07 32 BD 01 28 FE 07 32 A6 00 8D 5E BD
0760 07 E4 BD 01 28 FE 07 32 A6 00 8D 62 8D 76 7C 01
0770 85 8C 2F 80 27 12 B6 01 85 81 40 27 03 08 20 D2
0780 7F 01 85 BD 01 F3 20 F5 7F 01 85 7A 02 F4 7D 02
0790 F4 27 02 20 B7 7E 0F 01 10 16 45 4E 54 45 52 20
07A0 4E 55 4D 42 45 52 20 4F 46 20 4E 4F 49 53 45 20
07B0 50 49 43 54 55 52 45 53 0A 0D 3F 04 00 F6 01 27
07C0 54 54 C4 0F 44 44 44 44 1B 44 B7 07 BC 39 F6 01
07D0 27 54 54 C4 0F 84 0F 1B 44 F6 07 BC 48 48 48 48
07E0 1B A7 00 39 37 C6 0F 5A 5D 26 FC 33 39 00 00 00

0F00 00 BD 01 86 CE 0F 45 BD E0 7E BD E1 AC B7 0F 00
0F10 84 F0 81 30 26 EB B6 0F 00 84 0F 4D 27 E3 CE 0F
0F20 27 08 08 08 4A 4D 26 F9 6E 00 7E 01 01 7E 01 86
0F30 7E 05 F0 7E 04 94 7E 04 4F 7E 04 F7 7E 02 F5 7E
0F40 07 34 7E 02 28 10 16 45 4E 48 41 4E 43 45 20 53
0F50 53 54 56 20 50 52 4F 47 52 41 4D 0A 0D 31 2E 20
0F60 54 45 53 54 0A 0D 32 2E 20 52 45 43 45 49 56 45
0F70 0A 0D 33 2E 20 43 4F 4E 54 52 41 53 54 0A 0D 34
0F80 2E 20 42 49 4E 41 52 59 0A 0D 35 2E 20 4E 45 47
0F90 41 54 49 56 45 0A 0D 36 2E 20 5A 4F 4F 4D 0A 0D
0FA0 37 2E 20 54 52 41 4E 53 4D 49 54 0A 0D 38 2E 20
0FB0 4E 4F 49 53 45 0A 0D 39 2E 20 50 52 49 4E 54 0A
0FC0 0D 3F 04 00 00 00 00 00 00 00 00 00 00 00 00 00
```

the PIA. The PIA must be initialized for the analog card to function properly.

Program Delay Constants

As discussed earlier, if a different CPU clock speed is used, different program delay constants should be used. These constants are as shown in Table 3.

These program constants are exactly like hardware timers and single-shots. I selected them by trial and error. I loaded a number into them and then viewed an SSTV picture. The number was then fine-tuned for the best picture quality.

Keyboard Entry	Memory Location	Value (hex)	Location
0	0526,7	1000	upper l/h corner
1	052B,C	1020	upper r/h corner
2	0530,1	1810	center
3	0535,6	2000	lower l/h corner
4	053A,B	201F	lower r/h corner

Table 2. Memory locations vs. picture locations.

MIKBUG Considerations

The program assumes that MIKBUG will be used. The following MIKBUG routines were used throughout the program:

E07E—Output an ASCII character string

E1D1—Output one ASCII character

E1AC—Input one ASCII character

The program also assumes the special Analog Card is

plugged into the Mother Board at address 8010 in the SWTPC MP-68. The program address assigned to the printer is 8018 (locations 02C3, 4 and 02D0, 1). A fully-commented source listing of my program is so large that I could not expect it to be published. If you wish a copy, send me $8.00 to cover the reproduction and mailing costs. If you are outside the USA, please include more postage for airmail. Also, if you decide to write, please include a SASE.

Acknowledgements

I would like to thank Mike Talent W6MXV for his help in interfacing the MXV-100 SSTV monitor and for his technical review of my project. Additionally, I would like to thank M. S. Schlosser, Vice President of Spatial Data Systems for providing a copy of his *Handbook of Image Processing*, and allowing me to refer to it. ■

Program Label	Program Location	Current Value	Program Use
MSEC1	0126	04	ADC conversion
MSEC2	01C9	20,10 (50 Hz)	Transmit delay
PUL1	03C5	5D	Horiz pulse width
—	03E6	1E	Vert pulse width
—	0200	0F	Missing horiz pulse width delay time
—	01E0,070B 0716	29,20 (50 Hz)	RECVPX delay
—	0710,071B 07E6	18,13 (50 Hz)	NOISE delay

Table 3. Program delay constants.

New Products

from page 147

ample).

Another feature is an analog output to directly indicate code speed in wpm on a 1 mA movement meter.

For additional information, write: *Curtis Electro Devices, Inc., Box 4090, Mountain View CA 94040*, or call (415)-964-3136. Reader Service number C90.

HEUER INTRODUCES WORLD'S SMALLEST DIGITAL MULTIMETER

Heuer has announced the availability of a microminiaturized digital multimeter, the DMM 2000, for industrial field service measurement applications. Introduced earlier this year at the Newcom '78 show in Las Vegas, the new instrument is the smallest, thinnest, most compact digital multimeter available anywhere. It weighs less than 3 ounces (or 80 grams), including probe and batteries, and measures 100 x 40 x 14 mm (4" x 1.87" x 0.55") for the base unit, and 100 x 20 x 12 mm (4" x 0.78" x 0.47") for the standard probe.

The LCD display assures a high degree of legibility for on-the-job service for computer systems, business machines, telephone exchanges, data transmission systems, radios, and TVs. The instrument provides four measuring ranges for every mode: dc up to 1000 volts and ac up to 700 volts, ac and dc current up to 2 A, and resistance up to 20 megohms, with a typical accuracy of 0.5% on the dc range.

Heuer was capable of developing such a small ,multimeter because the company combined the microminiaturization used in its watch manufacture with advanced multi-layer ceramic substrate techniques.

Two major technical features of the Heuer multimeter are its true rms (root mean square) measurement of the ac range and complete shielding against rf and other types of interference, which assures accuracy and error-free reading even in radio and TV applications. Another technical feature is the special design of the probe and hook for easy accessibility while testing high-density circuit boards. A choice of accessories, including special probes for high voltage, high current, and temperature measurement, is also available.

The exclusive permanent identification of the measuring mode on the LCD display and the remote control of measuring mode and range on the probe simplify operation of the multimeter, and assure error-free readout of the results. Up to 100-hour battery life is provided for the DMM 2000 by four small watch batteries of 1.5 V each. An additional advantage of the unit for field service application is its high electronics reliability and sturdy mechanical construction. The unit is delivered in a handsome carrying case which includes measuring cable, spare probe point, batteries, and fuses.

The DMM 2000, however, is not designed for professional use alone. With this unit, the electronics enthusiast has at his disposal a measuring and servicing instrument which suits his requirements, considering its ease of operation and sturdy construction.

The DMM 2000 marks the entrance of Heuer into the field of microelectronic instrumentation. Heuer is a 100-year-old Swiss pioneer in high-precision chronographs, stopwatches, and electronic timing devices.

For additional information, contact: *Hans J. Kueffer, Heuer Time & Electronics, 960 South Springfield Avenue, Springfield NJ 07081*. Reader Service number H30.

SD-1 TWO-TONE SEQUENTIAL DECODER

A new product announced by Communications Specialists is the SD-1 Two-Tone Sequential Decoder. This product is microminiature in size, measuring just 1.2" x 1.67" x .65" high, and will fit all mobile units and most portables.

It uses plug-in field-replace-

Continued on page 204

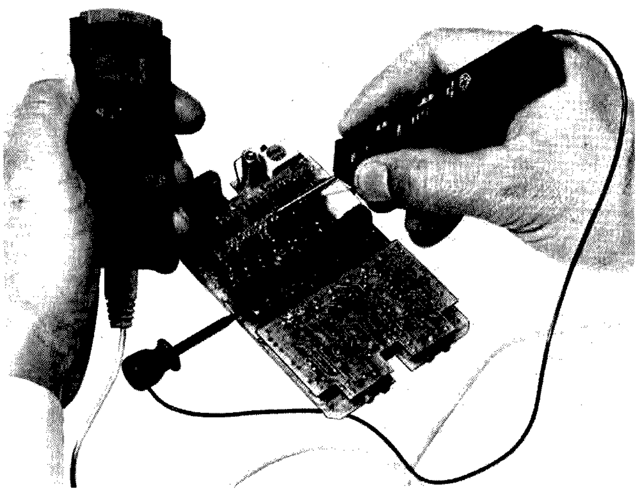

The DMM 2000 multimeter from Heuer.

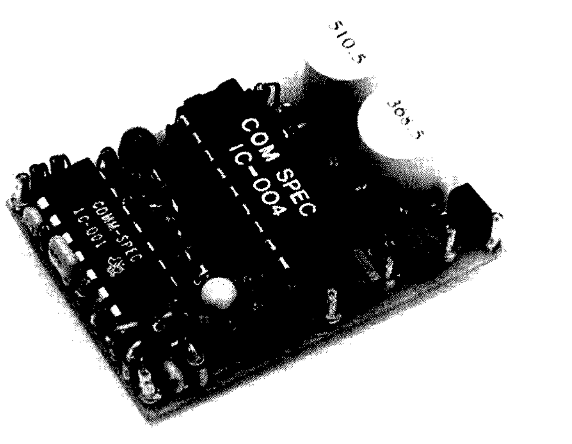

The SD-1 Two-Tone Sequential Decoder from Communications Specialists.

A Multi-Memory Morse Machine

—using a Motorola micro

Kenneth D. Leininger WA8TIW
11101 Pacton St.
Utica MI 48087

This program, a dual-function aid to sending Morse code, was written on Motorola's MEK6800D2 evaluation kit. Not only is the function useful, but valuable experience is to be gained in writing a program which exercises the PIA. (No matter how large or small your system, you can't "control the world" without first stirring those I/O lines to life!)

As previously indicated, this program does two jobs: It emulates the logic of an automatic keyer, and also allows the fully-automatic transmission of one of five preprogrammed messages. All eight lines on the "A" side of the user's PIA are utilized: two for the dot and dash contacts of the keyer, one for the output to the keying-relay buffer, and one for each of the five message-select push-buttons. Fig. 1 indicates how simple a schematic becomes once a microprocessor system is used to displace combinational logic.

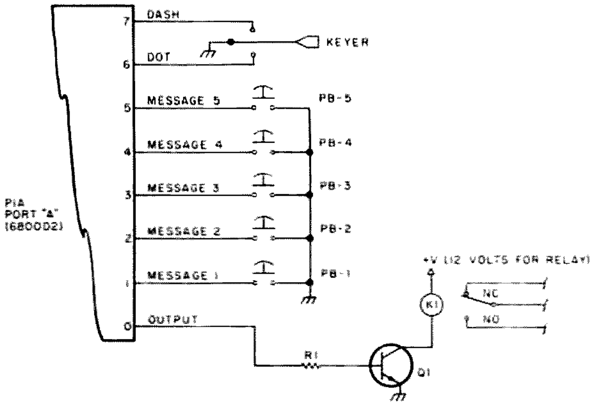

Fig. 1. Code system schematic diagram.

The program runs in the 256 bytes of RAM provided in the "barefoot" kit, but expansion of the kit to 512 bytes by adding two 6810 chips in the sockets provided is necessary for the message buffer. Of course, one could utilize the optional ROM areas on the kit once the application and messages were suitably developed.

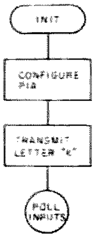

Fig. 2. System initialization.

Initialization

The program is executed at location 001D. As indicated by Fig. 2 and Program A, the PIA is configured, then the letter "k" is sent to acknowledge a functioning system. Just how the dits and dahs are formed will be discussed shortly. Each PIA line assigned as an input looks like a standard TTL input, complete with internal pull-up resistor. Bit 0, the output line, has insufficient power to directly drive the keying relay, a problem easily overcome with the use of a common-emitter amplifier.

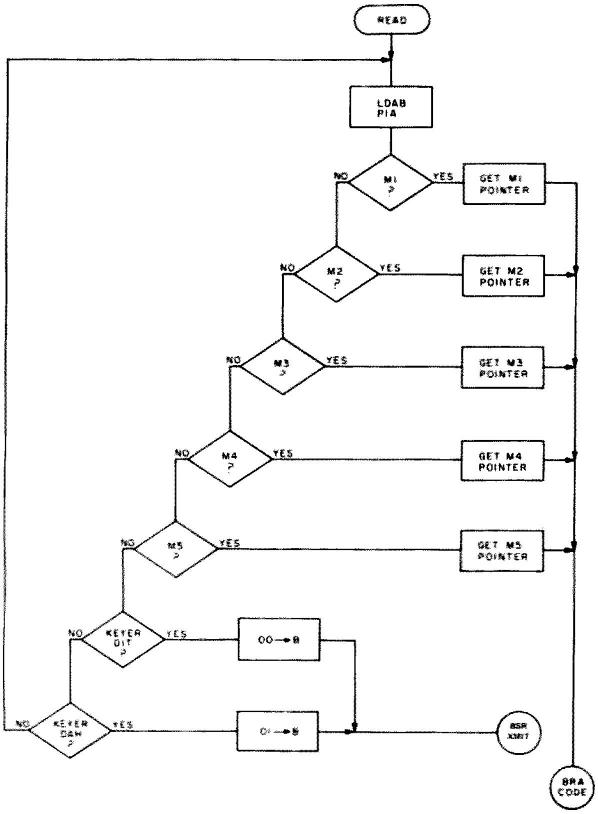

Fig. 3. Input polling routine flowchart.

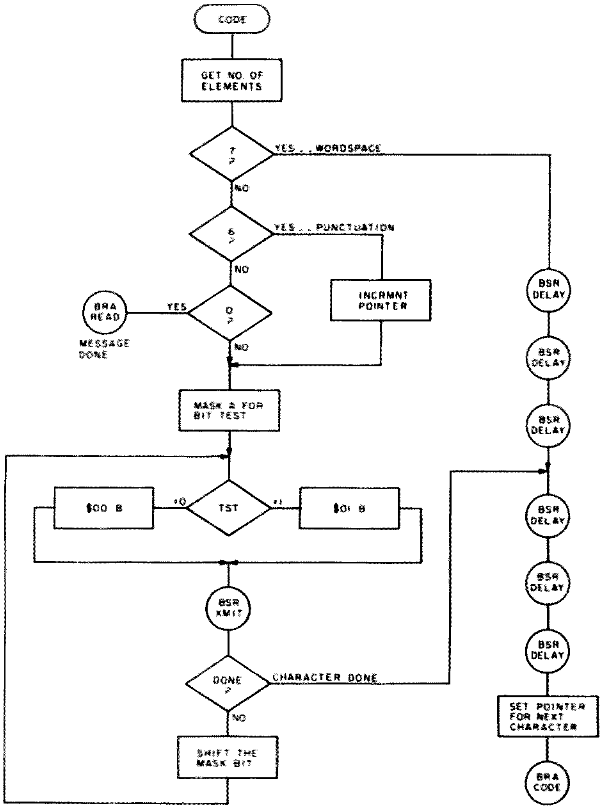

Fig. 4. Morse code routine flowchart.

Character	Code	Character	Code	Character	Code
0	FD	I	02	AR	55
1	7D	J	74	Slash	95
2	3D	K	A3	Period*	06
3	1D	L	44	Period	54
4	0D	M	C2	Comma*	06
5	05	N	82	Comma	CC
6	85	O	E3	Question*	06
7	C5	P	64	Question	30
8	E5	Q	D4	Wordspace	07
9	F5	R	43	Halt	00
A	42	S	03		
B	84	T	81		
C	A4	U	23		
D	83	V	14		
E	01	W	63		
F	24	X	B4		
G	C3	Y	94		
H	04	Z	C4		

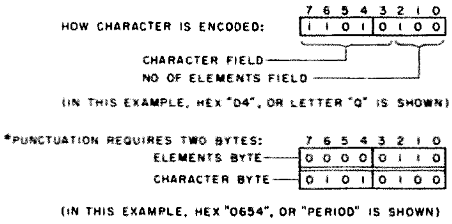

Fig. 5. Digitizing the Morse code.

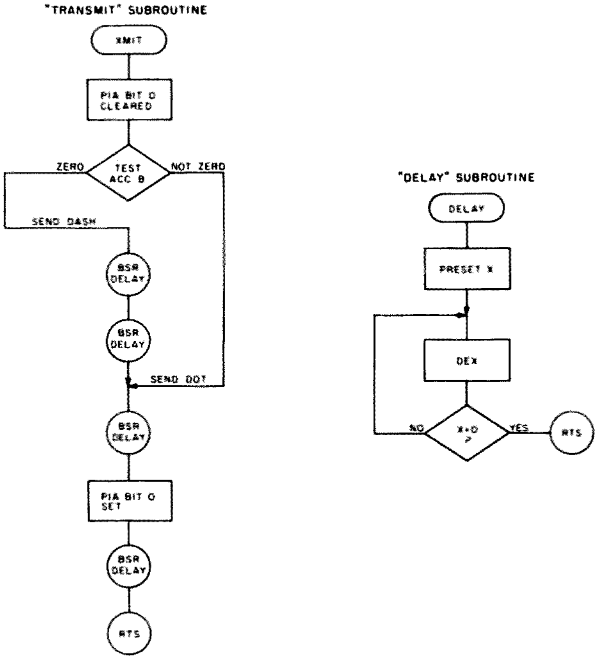

Fig. 6. Transmit and delay flowcharts.

PIA Polling

This portion of the program, illustrated in Fig. 3 and Program B, reads the input lines of the PIA (bits 1 through 7) and then sequentially compares the bit pattern with each legal pattern expected: five patterns for the five preprogrammed messages, and two for the keyer input. If all inputs remain high, the polling routine continuously repeats the check. If a particular message is selected, however, the grounded input is de-

```
LOCATION  CODE      LABEL   SYMBOL        COMMENT

ØØ        17ØØ      PRESET                VALUE DETERMINES CODE WPM
Ø2        Ø1ØØ      MESS1                 POINTS TO START OF TEXT 1
Ø4        Ø1Ø9      MESS2                 POINTS TO START OF TEXT 2
Ø6        Ø123      MESS3                 POINTS TO START OF TEXT 3
Ø8        Ø148      MESS4                 POINTS TO START OF TEXT 4
ØA        Ø151      MESS5                 POINTS TO START OF TEXT 5
ØC        ØØØØ      CRRNT                 POINTER FOR CURRENT CHAR
ØE        ØØ        MSKST                 BIT TEST MASK STORE AREA
ØF        ØØ        ELDEC                 ELEMENTS PER CHAR REGISTER

1D        7F 8ØØ5   INIT    CLR CRA       CLEAR CRA
2Ø        86 Ø1             LDA A #$Ø1    BIT Ø OF PIA IS OUTPUT
22        B7 8ØØ4           STA A PIA     SET BIT Ø OF DDR
25        86 Ø4             LDA A #$Ø4    SET BIT 2
27        B7 8ØØ5           STA A CRA     SELECTS PIA PERIPH REG
2A        C6 Ø1     READY   LDA B #$Ø1    SET B TO Ø1
2C        BD ØØCØ           JSR XMIT      SEND DASH
2F        5F                CLR B         CLEAR ACC B
3Ø        BD ØØCØ           JSR XMIT      SEND DOT
33        5C                INC B         SET B TO 1 AGAIN
34        BD ØØCØ           JSR XMIT      SEND DASH
```

Program A. System buffers, vectors, and initialization.

```
LOCATION  CODE      LABEL   SYMBOL        COMMENT

37        C6 FE     READ    LDA B #$FE    SET READ MASK
39        F4 8ØØ4           AND B PIA     AND PIA INTO ACC B
3C        C1 FC     TEST1   CMP B #$FC    COMPARE B WITH 'FC'
3E        26 Ø4             BNE TEST2     IF ≠, DO TEST 2
4Ø        DE Ø2             LDX MESS1     POINT TO MESSAGE 1
42        2Ø 31             BRA CODE      RUN MESSAGE
44        C1 FA     TEST2   CMP B #$FA    COMPARE B WITH 'FA'
46        26 Ø4             BNE TEST3     IF ≠, DO TEST 3
48        DE Ø4             LDX MESS2     POINT TO MESSAGE 2
4A        2Ø 29             BRA CODE      RUN MESSAGE
4C        C1 F6     TEST3   CMP B #$F6    COMPARE B WITH 'F6'
4E        26 Ø4             BNE TEST4     IF ≠, DO TEST 4
5Ø        DE Ø6             LDX MESS3     POINT TO MESSAGE 3
52        2Ø 21             BRA CODE      RUN MESSAGE
54        C1 EE     TEST4   CMP B #$EE    COMPARE B WITH 'EE'
56        26 Ø4             BNE TEST5     IF ≠, DO TEST 5
58        DE Ø8             LDX MESS4     POINT TO MESSAGE 4
5A        2Ø 19             BRA CODE      RUN MESSAGE
5C        C1 DE     TEST5   CMP B #$DE    COMPARE B WITH 'DE'
5E        26 Ø4             BNE TEST6     IF ≠, DO TEST 6
6Ø        DE ØA             LDX MESS5     POINT TO MESSAGE 5
62        2Ø 11             BRA CODE      RUN MESSAGE
64        C1 BE     TEST6   CMP B #$BE    COMPARE B WITH 'BE'
66        26 Ø3             BNE TEST7     IF ≠, DO TEST 7
68        5F                CLR B         PREP B FOR "DIT"
69        8D 55             BSR XMIT      TRANSMIT A "DIT"
6B        C1 7E     TEST7   CMP B #37E    COMPARE B WITH '7E'
6D        26 C8             BNE READ      IF ≠, GO BACK TO READ
6F        5F                CLR B         PREP B FOR 'DAH' BY
7Ø        5C                INC B         SETTING TO Ø1
71        8D 4D             BSR XMIT      TRANSMIT A 'DAH'
73        2Ø C2             BRA READ      GO TO READ

THIS ROUTINE POLLS THE PIA (BITS 1 THRU 7) AND
DISTRIBUTES CONTROL AS FUNCTION OF OPERATOR
INPUT TO THE PIA.
```

Program B. Input polling routine.

```
LOCATION  CODE      LABEL   SYMBOL        COMMENT

75        C6 Ø7     CODE    LDA B #$Ø7    MASK ACC B
77        E4 ØØ             AND B Ø,X     GET BITS Ø,1,AND 2
79        D7 ØF             STAB ELDEC    SAVE # OF ELEMENTS
7B        C1 Ø7             CMP B  $Ø7    SEVEN ELEMENTS?
7D        27 25             BEQ WRDSP     IF SO, DO WORDSPACE
7F        C1 Ø6             CMP B  $Ø6    SIX ELEMENTS?
81        27 Ø6             BEQ PUNCT     THEN PUNCTUATION
83        C1 ØØ             CMPB $ØØ      ZERO ELEMENTS??
85        26 Ø3             BNE CONT      IF SO, DONE.
87        2Ø AE             BRA READ      GO BACK TO POLLING
89        Ø8        PUNCT   INX           LOOK AT NEXT CHAR
8A        DF ØC     CONT    STX CRRNT     SAVE POINTER
8C        86 8Ø             LDA A #$8Ø    SET BIT 7 (MASKBIT)
8E        97 ØE     TEST    STA A MSKST   SAVE AT MASKSTORE
9Ø        5F                CLR B         GET READY FOR CODE
91        A5 ØØ             BIT A Ø,X     TEST AN ELEMENT
93        27 Ø1             BEQ SUB       IF Ø, DO DOT. IF 1, DO DASH
95        5C                INC B         PREP "B" FOR CHAR
96        8D 28     SUB     BSR XMIT      EXECUTE ELEMENT
98        7A ØØØF           DEC ELDEC     ONE LESS ELEMENT
9B        27 ØD             BEQ CHRSP     IF ZERO, DO CHAR SPACE
9D        96 ØE             LDA A MSKST   GET MASK BACK
9F        44                LSR A         SHIFT BIT TO RIGHT
AØ        DE ØC             LDX CRRNT     GET POINTER BACK
A2        2Ø EA             BRA TEST      GO TO TEST
A4        8D 36     WRDSP   BSR DELAY     SIX DELAY UNITS
A6        8D 34             BSR DELAY     SENT BETWEEN WORDS
A8        8D 32             BSR DELAY     CALLED BY "Ø7".
AA        8D 3Ø     CHRSP   BSR DELAY     THREE DELAY UNITS
AC        8D 2E             BSR DELAY     SENT AFTER EACH
AE        8D 2C             BSR DELAY     CHARACTER
BØ        DE ØC             LDX CRRNT     GET POINTER
B2        Ø8                INX           INCREMENT FOR NEXT
B3        DF ØC             STX CRRNT     SAVE POINTER
B5        2Ø BE             BRA CODE      GET BACK; DO NEXT CHAR

THIS ROUTINE CONVERTS A HEXADECIMAL ENCODED
MORSE MESSAGE INTO REAL TIME MORSE CODE.
```

Program C. Morse code routine listing.

```
LOCATION  CODE      LABEL   SYMBCL        COMMENT

CØ        86 FE     XMIT    LDA A #$FE    MASK A: BIT Ø OFF
C2        B4 8ØØ4           AND A PIA     AND PIA INTO A
C5        B7 8ØØ4           STA A PIA     PIA BIT Ø NOW LOW
C8        5D                TST B         IF ACC B IS ZERO;
C9        27 Ø4             BEQ DOT       EXECUTE DOT
CB        8D ØF     DASH    BSR DELAY     OTHERWISE DO A DASH
CD        8D ØD             BSR DELAY     (A DASH IS THREE UNITS
CF        8D ØB     DOT     BSR DELAY     LONG; A DOT IS ONE)
D1        86 Ø1             LDA A #$Ø1    SET PIA BIT Ø BY
D3        BA 8ØØ4           ORA A PIA     UTILIZING THE "OR"
D6        B7 8ØØ4           STA A PIA     FUNCTION
D9        8D Ø1             BSR DELAY     COMPLETE THE DOT/DASH
DB        39                RTS           RETURN FROM SBRTNE
DC        DE ØØ     DELAY   LDX PRESET    THIS IS THE DELAY
DE        Ø9        DEC     DEX           SUBROUTINE. VARY CODE
DF        26 FD             BNE DEC       SPEED BY MODIFYING
E1        39                RTS           X PRESET AT LOC ØØ.
```

Program D. Transmit and delay subroutines.

tected, the index register is loaded with the starting location of the respective message text, and then a branch to "CODE" (location 0075) is executed. When the message is complete, "CODE" returns execution to the beginning of the polling routine. If the keyer is operated, then the dot or dash contact is detected and Accumulator B is respectively cleared or set. This accumulator is then handed to the "XMIT" subroutine whose job it is to make nice clean self-completing dits and dahs. After a single dit or dah, a "return from subroutine" instruction returns execution to the polling routine.

Digitizing the Morse Code

The real challenge, of course, was to teach the machine to speak "Morse." Essentially, the system obtains a character (a byte of data from the message text) and performs a bit test, starting at the MSB. A "1" is translated into a dash and a "0" into a dot. Knowledge of the number of dits and dahs in a particular Morse character is required in order to tell the program when to stop shifting the bit test across the data byte. This is accomplished by indicating the number of elements in the three least significant bits of the data byte. As shown in the flowchart in Fig. 4 and the listing in Program C, the A and B Accumulators are masked so that Accumulator B receives the number of elements. Accumulator B is then stored at "ELDEC," a memory location which is decremented every time a Morse element is completed. Fig. 5 indicates how the Morse code is encoded into the previously described format. As usual, exceptions exist, and they deserve some explanation. The format is useful for a Morse character which contains from one to five elements. Punctuation requires special handling. Therefore, if Accumulator B picks up the integer "06,"

Parts List

K1	Relay, Sigma 65F-1A-12DC or equivalent
PB-1 through PB-5	Switch, push-button-type, NO momentary-contact*
Q1	HEP 234 or equivalent
R1	1k, ¼ W

*Note: Because relay is energized during system reset, the relay output is taken off the normally closed contacts.

then that particular byte is skipped: The six-bit character is found at the next location in the text. Two other special cases exist, one for inserting just spaces, and one for terminating the message. These situations, again detected in Accumulator B, are illustrated on the "CODE" flowchart.

Morse Code Generation

Subroutine "XMIT" (Fig. 6 and Program D) handles the actual formation of and output for the dits and dahs. The timing for character generation is performed by a delay loop located at 00DC. The preset value is conveniently located at 0000. An initial value of hex 1700 sets the keyer and message generator speeds at about 13 wpm. A dot consists of one unit of time of output "on" followed by an identical unit of time of output "off." A dash consists of three units of time of output "on" followed by a single unit of time of output "off." The contents of Accumulator B at the time of the call indicate the desired element (00:dot; 01:dash). The output, PIA bit 0, is cleared to assert output "on". This prevents a keydown situation during system reset.

Setup

Loading the messages for the automatic sender consists of converting the text of the message into hexadecimal and storing it. (Armed with only an evaluation kit, this is a manual job!) The starting address of each message is then stored in the message-vector area starting at location 0002. The current program can only support five message vectors, but there is no reason (other than memory contraints) why a multitude of messages could not be stored; simply changing a vector would then pull a new text string into the foreground. A series of "Vs" or the word "test" repeated several times makes a nice brief message around which the code speed may be optimized. Fig. 7 illustrates a group of encoded messages.

Operation

Start the machine by executing at 001D. The letter "k" in Morse should acknowledge start-up. At this point, the keyer may be used, or any one of five messages may be sent by momentarily depressing the appropriate push-button. Once started, a message will proceed until completion.■

Message	Starting Location	Code
1. CQ CQ CQ	0100	A4 D4 07 A4 D4 07 A4 D4 07
2. DE WA8TIW K	0109	83 01 07 63 42 E5 81 02 63 07 A3 00
3. QTH IS UTICA, MICH. ES NAME IS KEN	0123	D4 81 04 07 02 03 07 23 81 02 A4 42 06CC 07 C2 02 A4 04 0654 07 01 03 07 82 42 C2 01 07 02 03 07 A3 01 82 00
4. EIGHT DITS	0148	01 01 01 01 01 01 01 01 00
5. QRZ QRZ QRZ	0151	D4 43 C4 07 D4 43 C4 07 D4 43 C4 00

Fig. 7. Sample message set.

"This is Your Computer Speaking"

—how to dial up your micro

Completed modem number one.

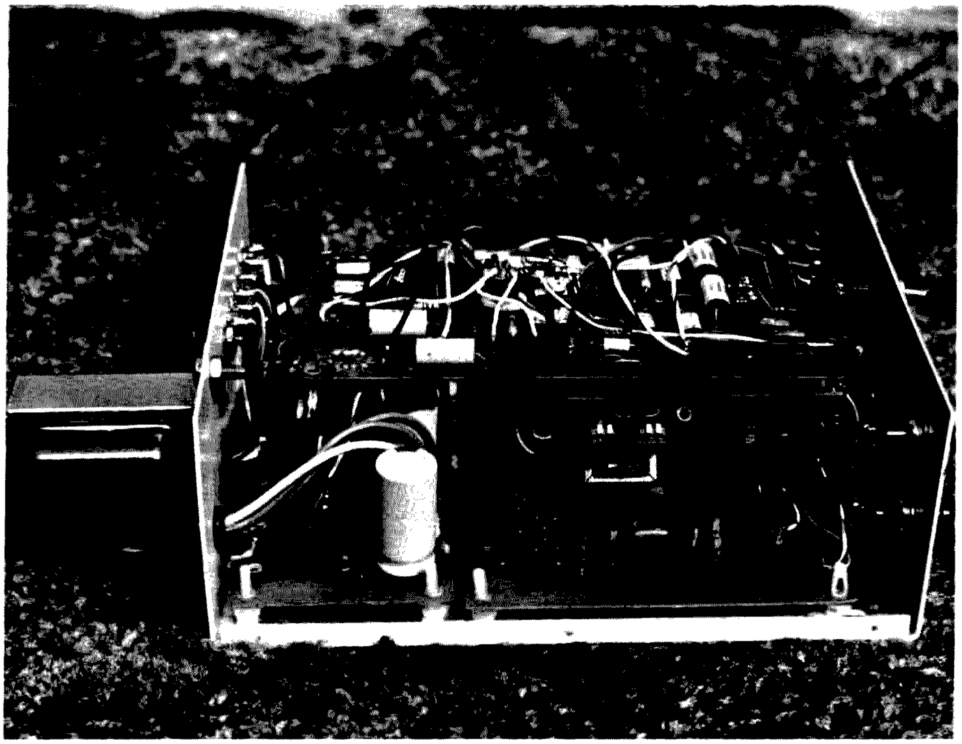

Inside view of my first modem (note internal coupler board mounted at angle to fit in case).

Jerry Sorrels
6266 Banner Ct.
Riverside CA 92504

A modem, now that's what I need for my 6800 system! But how about one that has auto answer? Auto answer lets you dial up your phone, and, when it rings, the modem will answer and connect your computer to the phone line. Now you, or someone else, can operate your computer from a remote terminal and modem.

I decided on using Motorola's MC6860 modem IC, and being a fairly-stingy-with-a-buck person, its availability, features, and $14.95 price are what sold me.

After spending a week thinking, I decided on the features for my first modem. It was going to do everything the chip was capable of. This overkill approach does have its advantages when you're not positive about what you're going to do with it or connect it to.

Two months later, when the smoke finally cleared, I had built two modems. One was a do-everything, interface-to-almost-everything, and the other was a minimum-parts version, with most of the features.

This article will be about a combination of my two modems which will have the following features: 0-300 baud, self-test, full duplex, originate and answer modes, compatible with various systems via TTL or RS-232 levels, and auto answer and disconnect. My total cost, for all new parts, was under $70, including the case and power supply.

Some Theory

This modem uses audio frequency shift keying (AFSK); data to be sent is converted to audio tones. If the modem is in the originating mode, a logic 0 (space) is sent as a 1070 Hz tone (2025 Hz, if in answer mode), and a logic 1 (mark) is sent as a 1270 Hz tone (2225 Hz if in answer mode); see Table 1. This might seem a little confusing, but it works just fine. These frequencies are standard for low-speed data communication.

This modem is composed of several logical sections. First is the interface to the telephone company line (see the schematic, Fig. 1). This interface must be able to match the characteristic impedance of the phone line, usually 900 Ohms, to the modem. It must provide dc isolation from the telephone line and, for automatic answer, must be able to detect when the phone is ringing and be able to answer and terminate the call.

The filter (see Fig. 2) passes only the frequencies 1070 Hz to 1270 Hz when in the answer mode and 2025 Hz to 2225 Hz when in the originate mode. The filter is needed because, in full duplex operation, the modem is transmitting and receiving at the same time, and the signals must be separated. The limiter, IC3, takes the sine wave from the filter and changes it into a symmetrical square wave of a TTL-compatible level. The demodulator in the modem IC compares each half-cycle of this square wave against the crystal-controlled timebase to determine if the incoming frequency is a mark or space. The threshold detector, IC4, is used to tell the modem IC that the input signal entering the limiter is above the minimum detectable level.

The 6860 modem IC is the brains behind the outfit. It takes care of modulation, demodulation, and the hand-shaking signals to establish, maintain and terminate the data link. Another section is the interface to the computer or terminal. There is a fair amount of flexibility here due to the 6860 signal levels being TTL-compatible. Depending on the exact use you plan for the modem, it can be tailored to fit. In my case, I converted some of the signals to RS-232; all of them could be converted if desired.

How It Works

IC1 is placed in the answer mode when its pin 19 is grounded. This is done by the ring detector when your phone rings or by pushing the answer switch. This causes IC1, pin 4 to go high, operating RL1, which

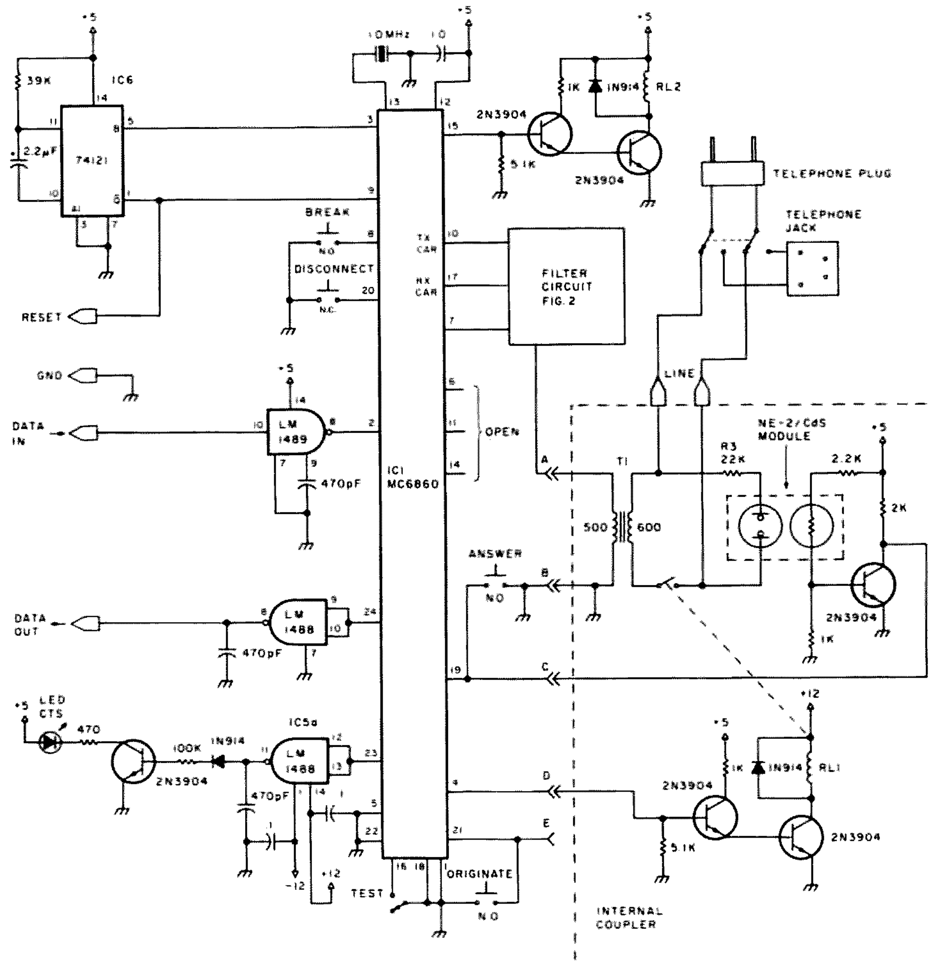

Fig. 1. Main schematic with internal coupler.

connects the modem and answers the call. At the same time, IC1, pin 15 goes low; this places RL2 in the proper position to select the answer mode filter. When IC1 detects the mark tone from the other modem, pin 23 goes low; this turns on the clear-to-send (CTS) LED.

The originating mode is initiated when the originating switch is pushed, causing IC1, pin 21 to go low. Next, pin 4 goes high, closing RL1, connecting the modem to the phone line. At the same time, pin 15 goes high, operating RL2 and selecting the originating filter. When IC1 detects the mark tone from the answering modem, it will send out its mark tone from pin 10 to the transmit buffer, T1, and out to the line. Now the CTS LED will light, indicating "ready to exchange data."

If IC1, pin 16 is held low, the modem is placed in the self-test mode. The demodulator is changed to the modulator frequency and loops back to the terminal whatever is typed in.

When a break (150 ms space) is received by the modem, IC1, pin 3 is clamped high and stops data exchange. This positive-going level triggers a one-shot, IC6, which sends a negative pulse to IC1, pin 9, automatically releasing the break condition. This negative pulse is also sent to my SWTP 6800 computer's MRST line. This gives the remote terminal the ability to operate the computer's hardware reset by sending a break.

	Data	Originate	Answer
0	Space	1070 Hz	2025 Hz
1	Mark	1270 Hz	2225 Hz

Table 1. FSK transmit frequency.

Construction Tips

I built the modem on four printed circuit boards, consisting of the following circuits: the internal coupler, the filter, limiter, and threshold detector, the modem IC and RS-232 chips, and the power supply. You can use whatever construction technique you prefer. I always socket all integrated circuits. This time I had to replace the 24-pin socket with one of better quality; it caused all sorts of problems, so beware! I guess if I had socketed the sockets, I might not have had that problem!

I made the ring detector by laying an NE-2 lamp on top of a flat cadmium sulfide cell and using hot-melt glue at each end of the lamp to hold them together. Then I wrapped black electrical tape around them to keep out the ambient light. The first one I made didn't work. I found that some NE-2 lamps require about 100 V ac before they light. Next I took apart a neon pilot lamp assembly. It had an internal 22k resistor in series with the neon lamp; this combination worked. The series resistor, R3, can be from 22k up to 220k, depending on the wattage rating of the lamp. Pretest your neon-resistor combination to make sure it will light on approximately 70 V ac. I bought the cadmium cell at a surplus store; it's about ¾-inch square and ¼-inch thick (any similar configuration you can come up with should work okay). There are also commercial neon/CdS modules available, such as the Clairex DLM 3120A Photomod.

RL1 is an SPST 12 V dc relay with a 1k Ohm coil, mounted in a 14-pin IC package. A suitable 5 V relay could be used if connected to the 5 V supply.

RL2 is a DPDT 5 V relay with a 100-Ohm coil, mounted in a TO-5 package. You should be able to use any similar relays. In my second modem, I left out RL2 and just used a DPDT switch, mounted between the originate and answer push-buttons. This made construction a lot easier, without losing any real features.

IC5a is just used for inversion to save a transistor.

I used a 500- to 600-Ohm transformer for T1. The ideal value for the side that connects to the phone line

is 900 Ohms. The side of T1 connected to terminals A and B can be anything between 500 and 1k Ohms, but, whatever value it is, R1 (connected to pin 1 of IC2a) should be adjusted to match it.

All the frequency-determining resistors in the originating and answer filters should be 1%. All the .01 uF capacitors should be 5% or better, mylar or polystyrene.

A lot of phone companies require you to rent (from them) a coupling device when connecting external equipment to their lines. There are several types of coupling devices that will give the same auto answer and disconnect features as the internal coupler described here. One is a CBS data coupler which has RS-232-compatible signals. If you use one of these, the optional data coupler interface (see Fig. 3) is used in place of the internal coupler. This circuit will provide the RS-232 levels needed by the phone company's CBS data coupler. R1 should be changed to a 600-Ohm resistor, because the customer sides of their couplers are 600 Ohms.

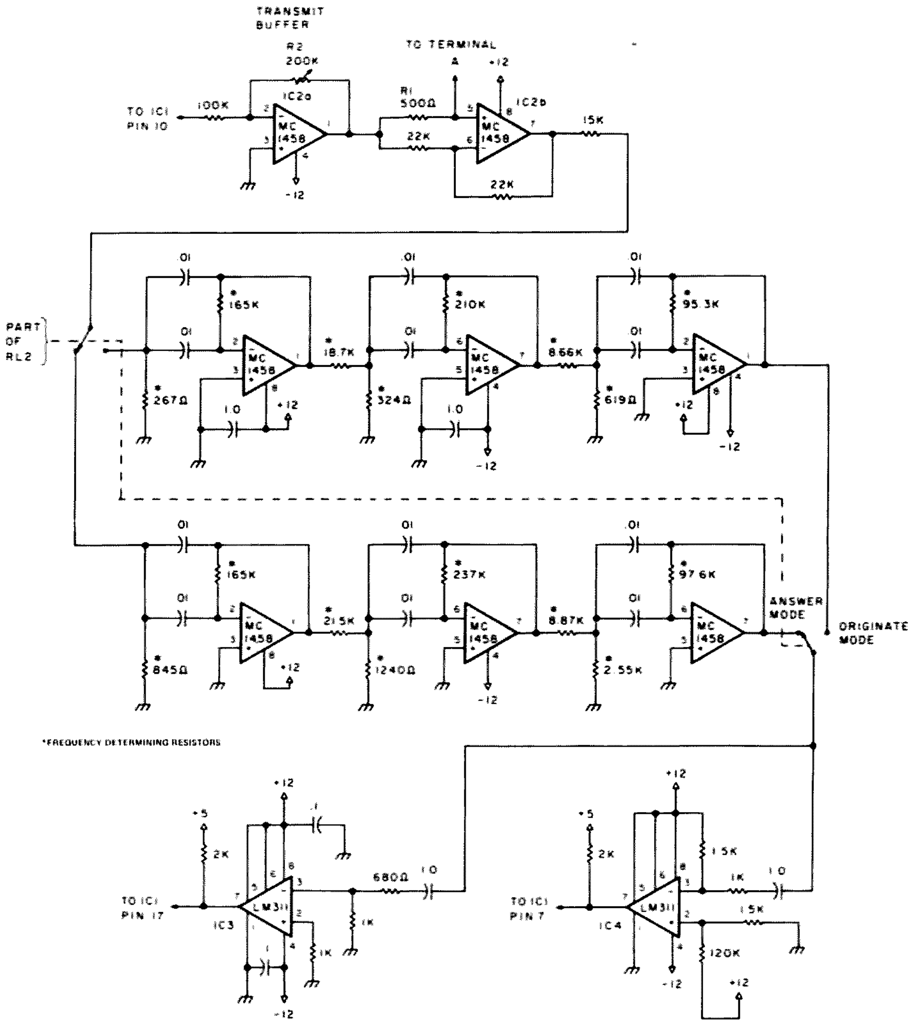

Fig. 2. Filter circuit.

Testing and Adjustment

The modem's handshaking signals should be tested first. Connect a small high-impedance speaker (100 Ohm) or frequency counter to the line terminals of the modem. Turn on the power and push the answer push-button; you should hear a 2225 Hz tone. The level can be adjusted by R2.

Next, connect an audio oscillator across the speaker and apply a 2225 Hz signal, push the originate push-button and, if you left out RL2, change the filter switch to originate. You should hear the modem send out a 1270 Hz tone, and the clear-to-send (CTS) LED will light. Next, push the break push-button; the modem should send a 150 ms 1070 Hz tone every time this switch is pushed. Now push the disconnect switch; the modem will send a 3-second 1070 Hz tone, the CTS LED will go off, and the modem will stop sending.

The transmit level (R2) will be adjusted next. Dial up a friend and have him leave his phone off the hook. With the modem line terminals connected across the phone line, push the answer push-button and hang up your phone, or operate the line switch to the modem. You have 17 seconds to measure the signal level across the phone line with an ungrounded meter. Use the output jack or connect a 0.1 uF capacitor in series with the meter and adjust R2 for a level of -15 dBm, 0.14 V rms, or 0.39 V p-p.

Next have your friend call you back, but, before he does, the modem should be on and connected to the phone line, and, if you left out RL2, place the filter switch in the answer position. When he calls, the phone should ring once. If it does, wait a few seconds and pick up your phone. The modem should be sending out a 2225 Hz tone. If the phone keeps ringing, the ring detector is not working.

To test the data section, connect the data in and out to something that speaks RS-232 at 300 baud or less. The modem does not care about format; it converts to tones anything that comes into it. I used my SWTP CT 1024 terminal. Turn on the modem and push the answer switch. Turn on the test switch. Now the CTS LED will light, and what you type on the keyboard will be looped back and printed on the screen. If you installed the manual filter switch, change it to the originate position (this is one of the things that RL2 does automatically). This is about all the testing you can do until you find someone else with a modem or build two like I did!

Interface and Operation

I connected the modem to my system by paralleling it across the CT 1024 data in and out lines. This

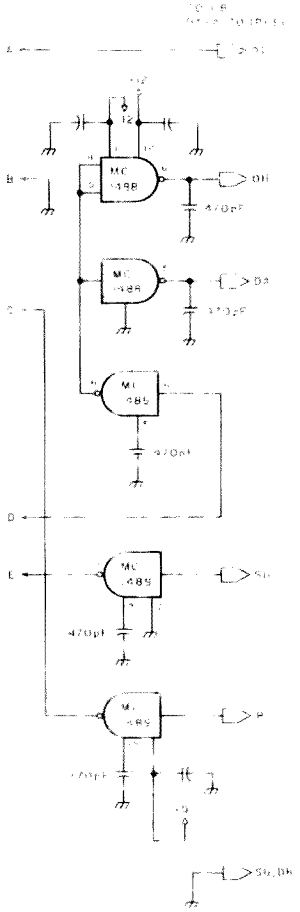

Fig. 3. Optional CBS data coupler interface.

way it acts like another terminal that can access the computer over the phone line.

To use the modem as a terminal only, like talking to a time share computer, just connect it to the terminal and disconnect the rest of the system.

When using modems, a point to remember is that one end must be in the originate and the other in the answer mode; it does not really matter which.

The hand-shaking tones can be lost for up to 17 seconds before the connection will be lost, but data sent when the CTS LED is off will be lost.

During actual use, if you are the originating modem, dial the number you want, and it will be answered by a person or a modem. If you hear a tone, you have 17 seconds to push your originate switch and hang up or change your line switch to the modem. When your modem detects the tone, it will send out its mark tone; then the CTS LED will light, and the data can now be exchanged.

If you are talking to an SWTP computer whose MRST line is connected to the reset terminal, sending a break will reset the computer to its Mikbug™ operating system. Operating the disconnect pushbutton will cause the modem at the other end to hang up.

Also remember that, if the modem is on and connected to the phone line, it will answer all calls you get. It could be someone not expecting to get a 2225 Hz tone in his ear, and they could report your phone out of order. The best thing would be if you had a separate phone line just for the modem.

For my acid test, I left one modem at home and the computer loaded with games; the other I took with my terminal over to a friend's home. I dialed up the computer, and we played games for four hours. It worked great! Imagine what I could do with a floppy back at the computer! ■

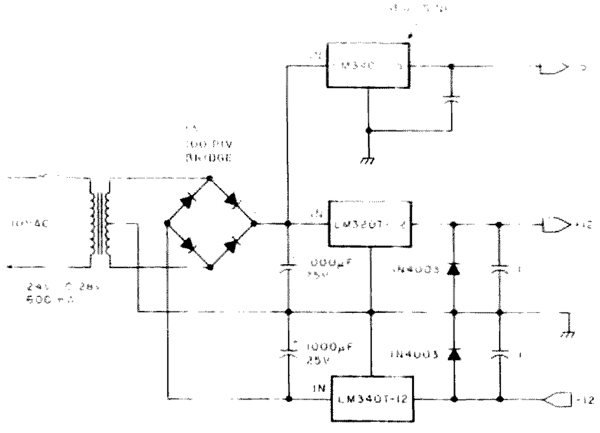

Fig. 4. Power supply.

References

1. Feisenstein, Lee. "Build Pennywhistle, the Hobbyist's Modem," *Popular Electronics*, March, 1976.
2. Lancaster, Don. *TV Typewriter Cookbook.*
3. Motorola MC6860L data sheet.
4. De Lavne, Jon, "Low-speed Modem System Design Using the MC6860," Motorola Application Note AN-747.
5. Nash, Garth, "Low-speed Modem Fundamentals," Motorola Application Note AN-731.
6. Lange, Ron, "Build the $35 Modem," *Kilobaud*, November, 1977.
7. Stark, Peter, "Solid State Telephone Ring Relay," *73 Magazine*, April, 1974.
8. Whipple, Spenser, "Basic Telephone Systems," *73 Magazine*, April-June, 1975.

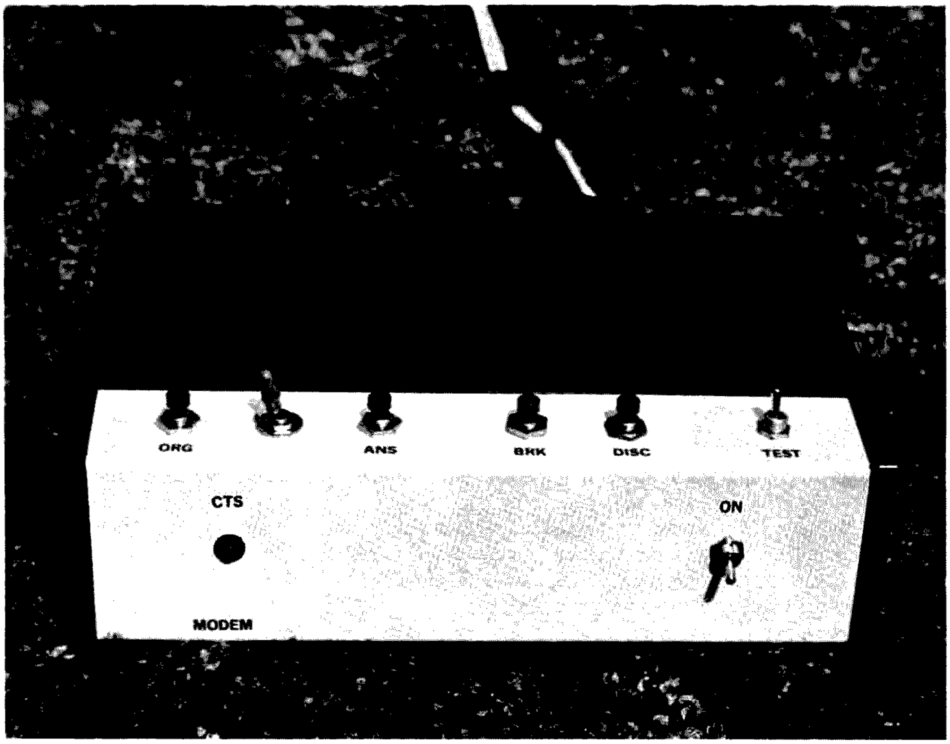

Close-up of modem number two. Everything was built on one circuit board. This does not have the auto answer feature.

Kim H. Lantz VE1AKL
Lantz Electronics Ltd.
15 Clifford Street
North Sydney, N.S.
Canada B2A 1X2

RTTY with the KIM

—one more step

Lower case			Upper case		
0300	40	letters	0320	40	letters
0301	4B	K	0321	28	(
0302	51	Q	0322	31	1
0303	55	U	0323	37	7
0304	20	figures	0324	20	figures
0305	4A	J	0325	27	'
0306	57	W	0326	32	2
0307	41	A	0327	2D	-
0308	58	X	0328	2F	/
0309	46	F	0329	21	!
030A	59	Y	032A	36	6
030B	53	S	032B	00	bell
030C	42	B	032C	3F	?
0300	44	D	032D	24	$
030E	5A	Z	032E	22	"
030F	45	E	032F	33	3
0310	56	V	0330	3B	;
0311	43	C	0331	3A	:
0312	50	P	0332	30	0
0313	49	I	0333	38	8
0314	47	G	0334	26	&
0315	52	R	0335	34	4
0316	4C	L	0336	29	)
0317	0A	Line feed	0337	0A	Line Feed
0318	4D	M	0338	2E	.
0319	4E	N	0339	2C	,
031A	4B	H	033A	EA	nop
031B	80	Space	033B	80	Space
031C	4F	O	033C	39	9
031D	00	CR	033D	0D	CR
031E	54	T	033E	35	5
031F	40	blank	033F	40	blank

Modified character set.

Without a doubt, the KIM-1 microcomputer has to be one of the slickest little rigs on the computer market. It is being put to work on all types of ham-oriented applications. It is decoding Morse and RTTY and transmitting Morse and RTTY, and all of this with only the 1K of memory that comes with the unit. (8080, eat your heart out.) At the time I was first seeing all of these articles (in *73 Magazine*, of course), I did not have a computer and was having a terrible time deciding on just what I should get. After seeing Wilfred Gregson's article (September, 1977) on "Receiving RTTY with the KIM" and several others, I decided on buying my namesake.

When I first tried Wilfred's program, I was amazed at what I was seeing. Even with the 7-segment display, the words were very easy to distinguish. I was quite heavily involved in RTTY at the time, so I had a terminal unit. I found the KIM-1 much more tolerant of the various things that affect RTTY. Such things as distortion of the character pulses that would drive the old Model 19 crazy did not seem to bother KIM very much. I was also using a HAL DS-3000 version 2 in my RTTY operations. For anyone familiar with this unit, they will know that besides featuring the Baudot code, it is an ideal computer terminal in the ASCII position. It was only logical that I should want the KIM to deliver the RTTY to the HAL terminal so I would not have to struggle with the 7-segment display. This is the basis of this article. It may

seem rather ironic to receive ASCII on a video terminal that already can receive in Baudot, but this is aimed at the computer hobbyist who would like to print RTTY on his Model 33 or on his ASCII terminal and does not have normal Baudot provisions.

I guess you could call this a glorified ASCII-to-Baudot converter, but to say that would be an injustice. Not only will you get the full upper and lower case, but you will also get something called "unshift on space." What this means is that if you are in upper case Baudot and you receive a space code, the unit will automatically shift back to lower case. This might not seem like much, but in the presence of severe noise and fading, this is a blessing in disguise. Here you will have the RTTY printer that many dream about. If you take the trouble to get this going, you will be in for some very artful RTTY pictures.

After studying the program, the first thing that I had to do was to get the OUTCH subroutine in there somewhere. With this come the necessary changes to the lookup table so that the characters that are OUTCHed will be the corresponding ASCII characters. One of the first problems that was encountered was interference with the command detection. For example, if I put the ASCII code for space, 20_h, in location

Program listing.

```
0200  A9  7F        LDA Imm 7F
0202  8D  41  17    STA abs 1741
0205  A0  06        LDY Imm 06
0207  A2  09        LDX Imm 09
0209  A9  00        LDA Imm 00   Put Ltrs in the ltrs/figs byte
020B  85  E4        STA,z 00E4
020D  2C  00  17    BIT 1700  Look for a start bit
0210  30  03        BPL branch if detect start
0212  4C  0D  02    JMP 0200   Look again.
0215  A9  0F        LDA Imm 0F  set the first time delay
0217  8D  07  17    STA abs 1707
021A  A9  00        LDA Imm 00  clear new char. register
021C  85  E7        STA,z 00E7
021E  A9  10        LDA Imm 10  set bit position register
0220  85  E5        STA,z 00E5
0222  2C  07  17    BIT 1707 is first delay finished ?
0225  30  03        BMI branch if yes.
0227  4C  22  02    JMP if not back to 0222 and wait
022A  A9  14        LDA Imm 14  set timer for second delay
022C  8D  07  17    STA abs 1707
022F  2C  07  17    BIT 1707 is timer finished?
0232  30  03        BMI  branch if yes
0234  4C  2F  02    JMP  if not, go to 022F and wait
0237  2C  00  17    BIT  Read the state of input 1700
023A  10  06        BMI  if it is " 0 " , do not load
023C  A5  E7        LDA,z load the bit at 00E7
023E  05  E5        ORA,z 00E5
0240  85  E7        STA,z 00E7
0242  46  E5        LSR,z 00E5  shift bit position register
0244  A5  E5        LDA,z 00E5 check for all 5 baudot char.
0246  C9  00        CMP Imm 00
0248  F0  03        BEQ  all finished ?
024A  4C  2A  02    JMP to 022A
024D  A5  E7        LDA,z 00E7  letters / figures prefix
024F  05  E4        ORA,z 00E4
0251  A8            TAY  index for lookup
0252  85  E3        STA,z  00E3
0254  B9  00  03    LDA abs,y
0257  85  E7        STA,z 00E7
0259  4C  40  03    JMP to output to terminal routine
025C  24  E7        BIT,z 00E7  check for a command
025E  10  03        BPL to function
0260  4C  81  02    JMP to finish
0263  06  E7        ASL,z 00E7 Decode letters function
0265  24  E7        BIT,z 00E7
0267  10  07        BPL branch to figures encode
0269  A9  00        LDA Imm 00
026B  85  E4        STA,z 00E4  letters command
026D  4C  81  02    JMP to finish
0270  50  07        BVC  bell
0272  A9  20        LDA Imm 20
0274  85  E4        STA,z 00E4
0276  4C  81  02    JMP to the finish
0279  A9  01        LDA Imm 01   BELL
027B  8D  01  17    STA abs 1701
027E  8D  00  17    STA abs 1700
0281  A9  15        LDA Imm 15   FINISH  set for the third delay
0283  8D  07  17    STA Imm 1707
0286  2C  07  17    BIT 1707   look
0289  30  03        BMI back
028B  4C  86  02    JMP
028E  A9  00        LDA Imm 00
0290  8D  00  17    STA 1700
0293  4C  0D  02    JMP
0296  EA            NOP
0340  85  E0        STA,z 00E0   save " A "
0342  86  E1        STX,z 00E1   save " X "
0344  85  E2        STY,z 00E2   save " Y "
0346  C9  80        CMP Imm 80  is this a space code ?
0348  F0  18        BEQ if so, then go to 0362
034A  C9  00        CMP Imm 00  is this a bell code ?
034C  F0  19        BEQ if so, then go to 0367
034E  C9  20        CMP Imm 20  is this a " FIGS " code
0350  F0  1C        BEQ if so, then go to 036C
0352  C9  40        CMP Imm 40  is this a " LTRS " code ?
0354  F0  1A        BEQ if so, then go to 036C
0356  20  A0  1E    JSR OUTCH send character to terminal
0359  A5  E0        LDA.z 00E0  Restore " A "
035B  A6  E1        LDX,z 00E1  Restore " X "
035D  A4  E2        LDY,z 00E2  Restore " Y "
035F  4C  5C  02    JMP back to main program
0362  A9  00        LDA Imm 00  unshift on space routine
0364  85  E4        STA,z 00E4
0366  A9  20        LDA Imm 20  space routine
0368  4C  56  03    JMP to OUTCH at 0356
036B  A9  07        LDA Imm 07  bell routine
036D  4C  56  03    JMP to OUTCH at 0365
0370  A9  00        LDA Imm 00 NULL routine
0372  4C  56  03    JMP to OUTCH at 0356
```

031B, the command detection part of the program would sense this as a FIGS command and all the characters received after that would be upper case.

Therefore, for all the commands, space, and bell codes in the table, there is another part in the output routine that will look for these and insert the correct ASCII codes for the function. After these modified codes are sent to the terminal, they are changed back to their original value so the command detection will function properly. See locations 0340_h through 0374_h for this function. The values for FIGS and LTRS that are output to the terminal are simply nulls because we do not want the terminal to print anything on these commands. If these were not changed to nulls, the terminal would space, 20_h on a FIGS command, or output the character @, which is 40_h on a LTRS command.

The next step in the modification was the deletion of all unnecessary steps in the program, such as the display and all the software that supports that function. This also included the "MOVE" and "SETX" parts in the original program. You will see that I also eliminated the tuning part from the original because I have a terminal unit with complete tuning facilities. If you were to use the PLL on the KIM for your terminal unit, you would have to add this on at the beginning. So do not forget to change the necessary commands for input from the PLL circuit and pin 8 on the applications connector.

I used a high-speed Potter and Brumfield reed relay to control data on pin 8, but I would suggest the photo-coupler as the best method. If you are not a RTTY advocate and do not have a terminal unit, there are several units on the market now which, for their price, cannot be beaten. Many of these do not come with the high-voltage loop supply which the mechanical units such as the Model 19 require, but this is just fine. We do not require the high pull-up voltage that these old beasts required. Remember we are modern! All you need is the current to light the LED on the coupler. This eliminates one major expense of a terminal unit. If you are serious about this at all, you really should invest in one of these cheap terminal units. You will receive some fantastic art and see some of the most enjoyable QSOs that you could ever want to see. You can then really enjoy the mode and not be plagued with the errors caused by QRM and QRN.

I hope that this article will just be the start of a whole RTTY operating system for the KIM-1 owner, featuring all the luxuries of this "receive" article and also some very desirable transmit functions like large memory buffer for typing faster than the output rate, correction and editing of transmitted data before it is actually transmitted, and more important, very little extra hardware.

Also, if you are thinking of a computer, I hope I have added just one more plug for the KIM-1. You will be able to copy all RTTY at all standard speeds, just by changing the bit in the timer. I would also like to talk to people who are KIM-1 owners. I usually hang out about 14.090 on Sunday at 1400Z. So please give me a holler and maybe we can trade information on this and other programs.

Oh, yes, anybody have a floppy on a KIM? ■

Jan A. Heise WA4VQD
1519 Pine Ridge Ct.
Montgomery AL 36109

Ed Mehnert N3NN
PO Box 73
Scott AFB IL 62225

DX Delight

—a do-it-all program

Editor's Note: WA4VQD will provide a full listing of data for US and world cities and all DX countries to all those who request such and enclose a legal-size SASE.

Calculating Great Circle distances and antenna bearings to various points around the world by hand, even with a calculator, is tedious and time-consuming. Here is a program that does it for you. By entering a set of coordinates, you can get the distance and bearing to any other point in the world. Using the data compiled and supplied here with the program will yield distance and bearing tables to major US cities and all the DX countries on the American Radio Relay League (ARRL) countries list.

```
GREAT CIRCLE BEARINGS AND DISTANCES PROGRAM


DO YOU NEED INSTRUCTIONS? - YES OR NO
? YES
THIS PROGRAM CALCULATES GREAT CIRCLE DISTANCES IN
STATUTE MILES AND KILOMETERS AND BEARINGS BETWEEN
YOU AND THE REST OF THE WORLD.  LATITUDES IN THE
NORTHERN HEM ARE POSITIVE AND SOUTHERN HEM ARE NEG.
LONGITUDES IN THE EASTERN HEM ARE POSITIVE
AND WESTERN HEM ARE NEGATIVE.  ALWAYS USE DEGREES
WITH DECIMAL PARTS - NO MINUTES AND SECONDS.

WHAT IS YOUR NAME AND CALL LETTER?
? JAN HEISE - WA4VQD
WHAT IS YOUR LOCATION (HOME QTH)?
? MONTGOMERY, AL
WHAT IS THE LATITUDE OF THIS LOCATION?
? 32.3

WHAT IS THE LONGITUDE OF THIS LOCATION?
? -86.3
SELECT THE FUNCTION YOU WANT AND ENTER THE NUMBER

1 = GLOBAL GRID CENTERED ON YOUR LOCATION
    (LAT EVERY 15 DEGREES & LONG EVERY 30 DEGREES
2 = BEARINGS AND DISTANCES TO MAJOR US CITIES
3 = BEARINGS & DISTANCE TO DX LOCATIONS FROM THE
    ARRL COUNTRIES LIST - LISTED BY CALL PREFIX
4 = BOTH US CITIES AND DX LIST.
5 = BEARINGS & DISTANCE TO USER SELECTED POINTS.
6 = ENTER NEW CENTRAL LOCATION
7 = TERMINATE THE PROGRAM!!!

? 5

ENTER DISTANT LOCATION DESIGNATION
? PARIS, FRANCE

ENTER LATITUDE OF DISTANT POINT.
? 48.83

ENTER LONGITUDE OF DISTANT POINT.
? 2.33

DISTANCE FROM MONTGOMERY, AL TO PARIS, FRANCE IS  4522  MILES.
THAT DISTANCE IS  7277  KILOMETERS.
BEARING TO PARIS, FRANCE IS  46  DEGREES.

DO YOU WANT OTHER POINTS CALCULATED? YES OR NO

? NO
```

Fig. 1 Sample run of program instructions.

How It Started and Credits Due

When I started selling selected pieces of amateur radio gear to pay for my growing computer system, my ham radio colleagues always came up with the old familiar "What will it do?" or "I'd build one of those computers if I could find a use for it." I had a canned five-minute dissertation on the virtues and potential applications for my system which I could immediately recite. This usually quieted them, but I wanted a good amateur radio application to prove that my computer could "really do something."

I got the idea for this program from Ed Mehnert N3NN while he was giving a talk on DXing to our local Twin Base Amateur Radio Club. Ed mentioned that he had developed a computer program written in BASIC on a time-sharing system which allowed him to calculate the distance and bearing to the DX countries. At that moment, the light bulb in my head came on. "If it will work on a time-sharing BASIC system, it will work on my IMSAI," I said to myself. Then I knew I had found a good ham radio program for my computer. With Ed's blessing, I rewrote his program and used the extensive data he compiled on the DX locations to come up with this program.

The General Theory and Calculations

Any edition of *The ARRL Antenna Book* features a section on finding directions. This includes a description of the calculations for Great Circle distances and bearings between any two points in the world. These are based on two formulas using trigonometric functions.

For distance: Cos D = sin A sin B + cos A cos B cos L.

For bearing: Sin R = cos B csc D sin L.*

A = your latitude in degrees.

B = the latitude of the distant location in degrees (latitudes in the Northern Hemisphere are positive and those in the Southern Hemisphere are negative).

L = longitude difference between the two

***The American Radio Relay League, *The ARRL Antenna Book*, Twelfth Ed., Newington, Connecticut, 1970, p. 284.**

CITIES LISTING CENTERED ON MONTGOMERY, AL FOR JAN HEISE - UA4VOD

BEARINGS AND DISTANCES TO MAJOR US CITIES

CITY	MILES	K/M	BEARING
ANCHORAGE	3423	5509	325
ATLANTA	149	240	47
BANGOR-ME	1276	2053	42
BIRMINGHAM	88	142	341
BBISE-IB	1793	2885	304
BOSTON	1089	1753	46
CHARLOTTE	374	602	56
CHEYENNE	1191	1917	306
CINCINNATI	481	774	12
CLEVELAND	684	1101	20
COLUMBIA-SC	328	528	68
DALLAS	612	985	276
DENVER	1160	1867	301
DES-MOINES	758	1220	330
DETROIT	714	1149	14
GREAT-FALLS	1678	2700	316
HONOLULU	4403	7086	280
HOUSTON	577	929	255
INDIANAPOLIS	518	834	1
JACKSONVILLE	310	499	115
KANSAS-CITY	661	1064	318
KNOXVILLE	288	463	27
LAS-VEGAS	1660	2671	287
LITTLE-ROCK	383	616	297
LOS-ANGELES	1842	2964	282
LOUISVILLE	409	658	5
MEMPHIS	288	463	313
MIAMI	569	916	141
MILUAUKEE	745	1199	353
MINN-ST.PAUL	950	1529	339
MINOT	1348	2169	329
NASHVILLE	264	425	354
NEUINGTON-ARRL	990	1593	45
NEU-ORLEANS	270	435	235
NEU-YORK	895	1440	46
NORFOLK	654	1052	57
OKLAHOMA-CITY	679	1093	292
OMAHA	820	1320	322
PETERBOROUGH-73	1069	1720	43
PHILADELPHIA	815	1312	46
PHOENIX	1491	2399	279
PITTSBURG	660	1062	30
PORTLAND	2136	3437	306
RAPID-CITY	1219	1962	316
ST.LOUIS	496	798	334
SALT-LAKE-CITY	1535	2470	300
SAN-FRANCISCO	2064	3322	291
SEATTLE	2158	3473	310
TAMPA	374	602	142
UASHINGTON-DC	693	1115	46
UICHITA	7594	12221	357

Fig. 2. Sample run of US cities list.

locations. In this program, L = L1 - L2, where L1 is your longitude and L2 is the distant location. Longitudes in the Eastern Hemisphere are positive and those in the Western Hemisphere are negative.

D = distance in nautical miles or minutes of an arc. One Great Circle arc is 60 nautical miles and 1 min. = 1 nautical mile = 1.15078 statute miles. In this program, the output is converted to both statute miles and kilometers.

R = the direction of the distant location from you in degrees east or west of north or south.

What this means is that the result will be between -90 and +90 degrees. This must then be converted to 0-359 degrees. For example, a raw bearing of 17 could mean 0 + 17, 180 - 17, 180 + 17 or 360 - 17. Thank goodness *for* the computer to keep track of all the signs.

Most BASIC interpreters do not have arcsin and arccos functions; therefore, the arctangent function is used to get cos D and sin R in the formulas back into degrees based on the following relationship:

BEARINGS TO DX LOCATIONS ON ARRL COUNTRIES LIST
DEL - MEANS A COUNTRY DELETED FROM ARRL LIST

DX LISTING CENTERED FROM MONTGOMERY, AL FOR JAN HEISE -UA4VOD

	DX PREFIX	MILES	K/M	BEARING
1	A2C	8338	13418	101
2	A35	6818	10972	252
3	A4X	7727	12435	38
4	A6X	8156	13125	37
5	A7X	7580	12198	41
6	A9X	7451	11991	40
7	AC3	8328	13402	5
8	AC4	8164	13138	2
9	AP	7902	12717	24
10	BV	8074	12993	332
11	BY-N	7241	11653	343
12	BY-CTR	7671	12345	351
13	BY-S	8430	13566	337
14	C21	7151	11508	278
15	C31	4691	7549	53
16	C5A	4511	7260	90
17	C6A	618	995	124
18	C9M	8743	14070	92
19	CE	4628	7448	166
20	CE9-ANTR	8450	13599	180
21	CE0A	4372	7036	203
22	CE0X	4049	6516	173
23	CE0Z	4599	7401	174
24	CM	694	1117	157
25	CN	4438	7142	66
26	CP	3539	5695	158
27	CR3	5552	8935	111
28	CR4-NOU-D4	4064	6540	91
29	CR5	5583	8985	96
30	CR6-NOU-D2	7424	11947	95
31	CR7/C9M	8743	14070	92
32	CR8-DEL	9869	15882	302
33	CR9	8409	13533	337
34	CR10-DEL	9869	15882	302
35	CT	4231	6809	61
36	CT2	3332	5362	67
37	CT3	3898	6273	69
38	CX	5004	8053	155
39	D2A	7424	11947	95
40	D4	4064	6540	91
41	D62B	8903	14328	77
42	DL-DEL	4709	7578	43
43	DA-UEST	4709	7578	43
44	DM-EAST	4826	7766	39
45	DU	8703	14006	327
46	EA	4445	7153	57
47	EA6	4812	7744	55
48	EA8	4078	6563	74
49	EA9-CEUTA	4410	7097	62
50	EA9/R-DEL	4332	6971	76
51	EA9/S-DEL	4332	6971	76
52	EA0-DEL	6549	10539	86
53	EI	4048	6514	44
54	EL	5169	8318	92
55	EP	6969	11215	34

Fig. 3. Sample run of DX countries list.

```
3000 DATA ANCHORAGE,61,-150,ATLANTA,33.75,-84.4
3005 DATA BANGOR-ME,44.8,-68.8,BIRMINGHAM,33.5,-86.8
3010 DATA BOISE-ID,43.6,-116.2,BOSTON,42.4,-71
3015 DATA CHARLOTTE,35.2,-80.8,CHEYENNE,41.2,-104
3020 DATA CINCINNATI,39.1,-84.5,CLEVELAND.4
3025 DATA COLUMBIA-SC,34,-81,DALLAS.3?          V,10.3,-67
3030 DATA DENVER,39.7,-105,DE          ,44,4X4,32,35
3035 DATA DETROIT,42.3,-83          ,39.5,5H3,-8,35
3040 DATA HONOLULU          ,5T5,18,-16,5U7,13,2
3045 DATA          ,-13,-171,5X5,.5,32,5Z4,-1,37
3050          ,1.5,45,6W8,15,-17,6Y5,18,-77,70-ADEN,12.5
     DATA 44.5,70-SOC,12,54,7P8,-29.5,28,7Q7,-15.5,36
4495 DATA 7X,36,3,8P6,12.5,-59.5,8Q,4,73,8R1,7,-59
4500 DATA 8Z,29,47,9A1,44,12,9G,5.5,0,9H,36,14,9J,-16,28
4505 DATA 9K,29,48,9L1,8,-13.5,9M-EAST,1.5,110.5
4510 DATA 9M-UEST,3,101.5,9N,27,85,9Q,-5,15,9U,-3,29.5
4515 DATA 9V1-SING,1,104,9X,-2.5,30,9Y4-TR&TOB,10.5,-61
4999 DATA ENDATA2,2,2
9999 END
```

Fig. 4. Portion of data statements from main program.

$$X = \arctan \frac{\sin X}{\cos X} = \arctan \frac{\sqrt{1-\cos^2 X}}{\cos X}$$

$$\text{or } \arctan \frac{\sin X}{\sqrt{1-\sin^2 X}}$$

Radians are used in performing the calculations rather than degrees. The following formulas are used to convert degrees to radians and vice versa:

$$\text{Radians} = \frac{\text{Degrees} \times \pi}{180}$$

$$\text{Degrees} = \frac{\text{Radians} \times 180}{\pi}$$

The degrees must be entered in decimal form for this program and not in minutes and seconds.

The Program Description

The program was built in a modular manner with a "menu-type selection" of the function desired. Each function uses the same calculations which are all in one subroutine. This makes the program easy to modify. By taking out the appropriate block of call and print instructions and data, you can eliminate unwanted functions. I used straightforward BASIC commands and avoided any known unique characteristics of my system. Numerous remark statements were used to help clarify the program.

The instructions from the beginning up to 400 give you the option to get instructions, then input the data for your location, and finally select which function you desire. As you can see from Fig. 1, the following functions are available from the menu:

1. This option prints a global grid centered on your location. This allows you to make your own world map centered on your location. These azimuthal maps can be purchased centered on a few of the major cities such as Chicago or New York, but this function provides the data necessary to make one for any central location.

2. This option prints the distances and bearings to over fifty selected US cities using the data provided in the program. You can add more if you wish.

3. This option prints the distances and bearings to all the DX countries on the ARRL countries list. These are listed alphabetically by radio call area prefix.

4. This option gives the cities list, automatically followed by the DX list.

5. This option allows you to enter any distant locations at the terminal and get the distance and bearing in return.

6. This option restarts the program at the point where you input the cen-

Main program listing.

```
50 PRINT "GREAT CIRCLE BEARINGS AND DISTANCES PROGRAM"
52 REM - PROGRAMMED BY JAN A. HEISE, WA4VOD, NOV 77.
55 PRINT
60 PRINT "DO YOU NEED INSTRUCTIONS? - YES OR NO"
65 INPUT I$
70 IF I$="NO" THEN 165
100 PRINT "THIS PROGRAM CALCULATES GREAT CIRCLE DISTANCES IN"
110 PRINT "STATUTE MILES AND KILOMETERS AND BEARINGS BETWEEN"
120 PRINT "YOU AND THE REST OF THE WORLD.  LATITUDES IN THE"
130 PRINT "NORTHERN HEM ARE POSITIVE AND SOUTHERN HEM ARE NEG."
140 PRINT "LONGITUDES IN THE EASTERN HEM ARE POSITIVE"
150 PRINT "AND WESTERN HEM ARE NEGATIVE.  ALWAYS USE DEGREES"
160 PRINT "WITH DECIMAL PARTS - NO MINUTES AND SECONDS."
165 PRINT
170 PRINT "WHAT IS YOUR NAME AND CALL LETTER?"
175 INPUT LINE N$
180 PRINT "WHAT IS YOUR LOCATION (HOME QTH)?"
185 INPUT LINE U$
190 PRINT "WHAT IS THE LATITUDE OF THIS LOCATION?"
195 INPUT A
200 REM - CONVERT A TO RADIANS
205 LET A1=A*3.14159/180
210 PRINT
220 PRINT "WHAT IS THE LONGITUDE OF THIS LOCATION?"
240 INPUT L1
250 LET J=0
252 LET F=0
255 GOSUB 2000
260 PRINT "SELECT THE FUNCTION YOU WANT AND ENTER THE NUMBER"
265 PRINT
270 PRINT "1 = GLOBAL GRID CENTERED ON YOUR LOCATION"
275 PRINT "    (LAT EVERY 15 DEGREES & LONG EVERY 30 DEGREES"
280 PRINT "2 = BEARINGS AND DISTANCES TO MAJOR US CITIES"
285 PRINT "3 = BEARINGS & DISTANCE TO DX LOCATIONS FROM THE"
290 PRINT "    ARRL COUNTRIES LIST - LISTED BY CALL PREFIX"
292 PRINT "4 = BOTH US CITIES AND DX LIST."
295 PRINT "5 = BEARINGS & DISTANCE TO USER SELECTED POINTS."
300 PRINT "6 = ENTER NEW CENTRAL LOCATION "
305 PRINT "7 = TERMINATE THE PROGRAM!!!"
307 PRINT
310 INPUT S
312 PRINT
315 ON S GOTO 400,515,605,510,700,50,9999
400 GOSUB 2000
401 PRINT "GREAT CIRCLE COORDINATES CENTERED ON ";U$
405 PRINT
410 PRINT "PROGRAMMED FOR ";N$
430 PRINT
435 PRINT "LATITUDE  LONGITUDE   MILES   KILOMETERS  BEARING"
437 PRINT "--------------------------------------------------"
440 FOR L2 =-180 TO 180 STEP 30
450 FOR B=-90 TO 90 STEP 15
460 GOSUB 1000
465 PRINT TAB3;B;TAB11;L2;TAB22;D1;TAB30;D2;TAB44;R2
468 REM - CHECK THE LINE COUNTER.
469 LET K=K+1
470 IF K=55 THEN 485
475 NEXT B
480 NEXT L2
482 GOTO 250
485 GOSUB 2000
490 PRINT "LATITUDE  LONGITUDE   MILES   KILOMETERS  BEARING"
491 PRINT "--------------------------------------------------"
495 GOTO 475
500 REM - 500 NUMBERED STATEMENTS READ THE FIRST SET OF DATA
502 REM - WHICH CONTAINS THE US CITIES DATA AND PRINTS LIST.
506 REM - F IS A FLAG TO SEE IF BOTH CITIES & DX LIST ARE
509 REM - DESIRED. IF YES ENTER AT 510 & F=1.
510 LET F=1
514 REM - 515 IS ENTRY POINT FOR CITIES ONLY (F=0 PRESET)
515 GOSUB 2000
520 PRINT "CITIES LISTING CENTERED ON ";U$;" FOR ";N$
525 PRINT
530 PRINT "BEARINGS AND DISTANCES TO MAJOR US CITIES"
535 PRINT
540 PRINT TAB5;"CITY";TAB15;"LAT/LONG     MILES   K/M   BEARING"
545 PRINT"--------------------------------------------------"
550 LET K=K+1
559 REM - READ DATA & CHECK FOR END OF FILE.
560 READ M$,B,L2
565 IF M$="ENDATA1" THEN 597
569 REM - GO PERFORM THE CALCULATIONS
570 GOSUB 1000
575 PRINT M$;TAB13;B;"/";L2;TAB28;D1;TAB35;D2;TAB43;R2
580 IF K=55 THEN 590
585 GOTO 550
590 GOSUB 2000
595 GOTO 540
596 REM - IS FLAG SET FOR BOTH CITIES AND DX LIST?
597 IF F=1 THEN 614
598 RESTORE
599 GOTO 250
600 REM - 600 NUMBERED STATEMENTS READ THE SECOND SET OF
602 REM - DATA WHICH IS THE DX COUNTRIES LIST DATA.
603 REM - 605 TO 610 FIND THE END OF THE FIRST DATA.
605 READ M$,B,L2
608 IF M$ = "ENDATA1" THEN 614
610 GOTO 605
614 GOSUB 2000
615 PRINT "BEARINGS TO DX LOCATIONS ON ARRL COUNTRIES LIST"
620 PRINT "DEL - MEANS A COUNTRY DELETED FROM ARRL LIST"
625 PRINT
630 PRINT "DX LISTING CENTERED FROM ";U$;" FOR ";N$
635 PRINT
640 PRINTTAB5;"DX PREFIX  LAT/LONG     MILES   K/M  BEARING"
645 PRINT"--------------------------------------------------"
```

tral location data. This is useful when you are preparing several lists for different locations—for all your ham friends.

7. This option simply terminates the program.

The 400-series statements all correspond to option one, which is to print the global grid. Nested loops are used to perform the calculations with the latitude incremented by 15 degrees at a time from -90 to +90, while the longitude is varied from -180 to +180 in increments of 30 degrees.

The 500-series statements are used to perform option two, which is to print the US cities list (see Fig. 2). A flag (F) is used to determine if lists of both cities and countries are desired. The 3000-series data statements contain the cities data used with this option. The program looks for "ENDATA1" in the city field to tell it there are no more cities. The data is then restored for use again, and the program either goes back to the menu or on to prepare a DX country list.

The 600-series statements correspond to option three, which is to prepare the DX countries list (see Fig. 3). If the entry here is from the menu, the program first reads the data and looks for "ENDATA1" in the country field. This means it must read through all the cities data, but since no calculations are performed, virtually no time is lost. The data for the DX countries list is contained in the 4000-series data statements (see Fig. 4). When this data is reached, the program operates just as it did for the cities. It looks for an "ENDATA2" in the country field to indicate it has reached the end of the countries data. The program then returns to the menu.

The 700-series statements compose the routine used to calculate individually-entered distant points. This routine is set up in a loop, which allows you to continue to calculate individual points until you desire to return to the menu.

The 1000-series subroutine performs all the calculations. The subroutine can be used as a stand-alone program if desired. It requires that A, B, L1, and L2, which I have previously discussed, be provided. It returns the following results: D1 = the distance in miles; D2 = the distance in kilometers; R2 = the bearing in degrees. All of these are rounded to the nearest integer.

In the routine, L is calculated and then

```
650 LET K=K+1
655 LET J=J+1
660 READ M$,B,L2
665 IF M$="ENDATA2" THEN 696
670 GOSUB 1000
675 PRINTJ;TAB5;M$;TAB15;B;"/";L2;TAB29;D1;TAB36;D2;TAB45;R2
680 IF K=55 THEN 690
685 GOTO 650
690 GOSUB 2000
695 GOTO 640
696 RESTORE
699 GOTO 250
700 REM - THE 700 NUMBERED STATEMENTS MAKE UP THE ROUTINE TO
701 REM - CALCULATE USER ENTERED COODINATES ONE AT A TIME.
705 PRINT "ENTER DISTANT LOCATION DESIGNATION"
715 INPUT LINE M1$
720 PRINT
725 PRINT "ENTER LATITUDE OF DISTANT POINT."
735 INPUT B
740 PRINT
745 PRINT "ENTER LONGITUDE OF DISTANT POINT."
755 INPUT L2
760 GOSUB 1000
765 PRINT
770 PRINT "DISTANCE FROM ";U$;" TO ";M1$;" IS ";D1;" MILES."
771 PRINT"THAT DISTANCE IS ";D2;" KILOMETERS."
772 PRINT "BEARING TO ";M1$;" IS ";R2; " DEGREES."
775 PRINT
780 PRINT"DO YOU WANT OTHER POINTS CALCULATED? YES OR NO"
785 PRINT
790 INPUT T$
795 IF T$ = "YES" THEN 705
799 GOTO 250
1000 REM - 1000 SERIES SUBROUTINE PERFORMS ALL CALCULATIONS.
1001 LET L=L2-L1
1002 REM - X IS A FLAG FOR TESTING L
1003 LET X=0
1005 REM - BRING L WITHIN RANGE -180 TO 180
1010 IF L<-180 GO TO 1025
1015 IF L>180 GO TO 1035
1020 GOTO 1040
1025 LET L=L+360
1030 GOTO 1100
1035 LET L=L-360
1040 IF L<0 THEN 1100
1045 LET X=1
1100 REM - CONVERT L AND B TO RADIANS
1110 LET B1 = B*3.14159/180
1115 LET L = L*3.14159/180
1119 REM - COMPUTE THE DISTANCE ANGLE
1120 LET P=COS(L)*COS(A1)*COS(B1)+SIN(A1)*SIN(B1)
1125 LET P1=ATN(SQR(1-P*P)/P)
1130 LET P2=P1*180/3.14159
1134 REM - DISTANCE ANGLE MUST BE POSITIVE IF NOT ADD 180
1135 IF P2<0 GOTO 1145
1140 GOTO 1150
1145 LET P2=P2+180
1149 REM - COMPUTE DISTANCE
1150 LET D1 = INT(P2*60*1.15152+.5)
1151 LET D2=INT(D1*1.6093+.5)
1154 REM - CONPUTE THE BEARING ANGLE.
1155 LET R=COS(B1)*SIN(L)/SIN(P1)
1160 LET R1=ATN(R/SQR(1-R*R))
1164 REM - CONVERT BEARINGS TO DEGREES ROUNDED TO NEAREST INT
1165 LET R2=INT((R1*180/3.14159)+.5)
1168 REM - DETERMINE WHAT QUADRANT THE BEARING ANGLE IS IN AND
1169 REM - ADJUST THE DEGREES.
1170 IF ABS(R)>.999998 THEN 1500
1175 IF ABS(R)<.00174 THEN 1600
1180 LET B2=(B+.1) * 3.14159/180
1185 LET R3=COS(L)*COS(A1)*COS(B2)+SIN(B2)*SIN(A1)
1190 LET R4=ATN(SQR(1-R3*R3)/R3)
1200 LET R6=COS(B2)*SIN(L)/SIN(R4)
1205 IF X=1 THEN 1240
1210 IF ABS(R6) > ABS(R) THEN 1230
1215 LET R2=360-ABS(R2)
1220 GOTO 1700
1230 LET R2 = 180+ABS(R2)
1235 GOTO 1700
1240 IF ABS(R6) < ABS(R)THEN 1255
1245 LET R2= 180-ABS(R2)
1250 GOTO 1700
1255 LET R2 = ABS(R2)
1260 GOTO 1700
1500 IF X=1 THEN 1530
1510 LET R2 = 270
1520 GOTO 1700
1530 LET R2=90
1540 GOTO 1700
1600 IF ABS(L) > 178 THEN 1640
1605 IF B<A THEN 1630
1610 LET R2=0
1620 GOTO 1700
1630 LET R2=180
1635 GOTO 1700
1640 IF B>A THEN 1630
1645 GOTO 1610
1700 RETURN
2000 REN - THIS ROUTINE PRINTS BLANK LINES AFTER EVERY 55
2001 REM - LINES OF DATA SO PAPER CAN BE CUT STANDARD SIZED.
2005 PRINT
2006 PRINT
2007 PRINT
2008 PRINT
2009 PRINT
2010 PRINT
2011 PRINT
2012 PRINT
2020 K=0
2030 RETURN
```

brought into the range of -180 to +180 degrees. All angles are then converted into radians and plugged into the formula to compute the distance angle. The bearing angle is then computed.

The rest of the calculations ensure that the bearing angle is placed in the correct quadrant. For most angles, the procedure is to take a slightly incremented point (0.1 degree) from the original angle and compare the sines of the original and incremented angles. The original angle is placed in the correct quadrant depending on whether the sine increased or decreased. For any L that is positive, the bearing angle will be in quadrant I or II, and for any negative L, it will be in quadrant III or IV. Keeping this in mind, you can see that the incremental test will tell you whether to add or subtract the bearing angle from 0 or 180 degrees to give you the final bearing angle.

Before the incremental test is performed, angles which are so small that the test could put them into the next quadrant are sorted out and simply rounded off. Since sin(0) = 0 and sin(90) = 1, the following procedure is used:

If the sine is positive and very close to 1, then angle = 90 degrees; if the sine is negative and very close to 1, then angle = 270 degrees; if the sine is positive and very close to 0, then angle = 0 degrees; if the sine is negative and very close to 0, then angle = 180 degrees.

Once the distances and the bearing angle have been calculated, the routine returns to the calling segment where the results are printed.

The 2000-series subroutine merely prints blank lines and new page headers to keep the output in a page size format. A counter (K) is used in each option. It calls the new page routine after every 55 lines of data are printed.

Sidelines and Miscellaneous Information

The complete program with all the cities and DX countries data requires about 14K of user memory. By omitting remark statements and some of the "frills," you can cut the size down considerably. By using DATA statements such as I did in this program, you can easily add new cities or make changes to the countries list.

The version listed here prints out the latitude and longitude of the cities and DX countries. After a few initial runs to verify the data, I went to a new version in which I stopped printing the latitude and longitude for each location.

Entering the data may look like an enormous task, but to me it was well worth it. Hams can buy listings similar to these from commercial sources, but they usually cost about $10.00. Your local amateur radio club members may be more than willing to compensate you for your efforts.

A feature which I plan to add to my program is an alphabetical listing of major cities around the world. *The World Almanac* gives the latitude and longitude for a long list of North American cities as well as several world cities. I use maps in the *Rand McNally World Atlas* for obtaining the latitude and longitude for other locations.

I hope that this program will be as useful to others as it has been to me.■

Reader Service—see page 323.

Big Max Attacks

—it's W2DU vs. K4KI, in the battle of the bazooka

M. Walter Maxwell W2DU
PO Box 215
Dayton NJ 08810

Several years ago I was faced with a perplexing question: Why the popularity of the so-called double bazooka, while *my* bazooka showed no vital signs other than those expected of a simple half-wave dipole? So, I performed an autopsy.

The startling results of the postmortem examination were published in *Ham Radio*,[1] and the graveside rites were reported in *QST*.[2] Since then, it has cluded *incorrectly* that it still lives. I will uncover these errors so that it can be quickly reburied.

The *73 Magazine* article[3] reporting his reexamination of the double bazooka (a *misnomer* for the coaxial dipole) discloses some interesting and valuable information. But it's unfortunate that some portions of the article are misleading, and others are totally incorrect (particularly the major conclusion), making it impossible for the uninitiated to separate fact from distortion.

cannot provide a worthwhile or *significant* improvement in bandwidth for the effort expended (even with stubs of *optimum* impedance), *unless the feedline impedance is considerably higher than the usual 50 Ohms.*

Errors in the Reexamination Technique

Mr. Vissers agrees that my conclusion is valid for a *free-space* environment. Nevertheless, because he miscalculated the effect of the "big difference" between free-space and near-earth antennas, his conten- can't provide in free space, by simply operating the coaxial dipole near earth.

On the contrary, just the opposite is true; the broadbanding effect of the stubs is *less* when the antenna is near earth than when it is in free space, not greater. In view of Mr. Vissers' seemingly plausible presentation, how can this be? Don't his graphs showing swr prove that the stubs are working? Indeed they don't. With all due respect to Mr. Vissers, I regret having to point out errors in his treatment of antenna fun-

In examining the reasons why he arrived at conclusions that are directly opposite to the facts, we will discover why the free-space, thin-wire antenna data used in my analysis *is* relevant to antennas near earth. Furthermore, since mistreatment of the fundamental concepts has generated confusion far beyond the realm of the coaxial-dipole antenna, I feel compelled to discuss the mistreated concepts in sufficient depth to clarify the confusion.

Validity of the Thin-Wire, Free-Space Dipole

To begin, let's consider the criticism concerning thin wire for the dipole radiating elements. The statement that there is no such thing as "thin-wire" coaxial cable has no meaning, because there is no reference defining what "thin" is. He has simply misinterpreted "thin" to mean *vanishingly* thin, instead of following the standard practice of specifying finite thickness of radiators in terms of wavelength λ. On the contrary, the antenna terminal impedances used throughout my analysis are based specifically on diameter D of the outer conductor of RG-58/U coax, where D = 0.140 inches = 0.0000445λ at 3.75 MHz, which is indeed a *"thin wire" at this frequency* (see page 50[1]). And in asserting that there is a "big difference" in the effect on bandwidth between free-space and near-earth conditions, Mr. Vissers must have overlooked my *measured, near-earth* data appearing on page 48 in the *Ham Radio* analysis,[1] and in *QST*.[2] The difference in the effect between these two conditions will be explored in detail later on.

Improper Selection of Q Spells Trouble in Fig. 8

Next, let's examine the three swr curves appearing in his Fig. 8. He used these curves as the "theoretical" basis for his conclusion that the coaxial stubs in the dipole are contributing *significantly* to bandwidth. However, because of an improper selection of Q for antennas near earth, these swr curves are incorrect—the true values are more than double those shown. Thus, the basis for his conclusion falls apart. All of the swr values in Fig. 8 were calculated based on resonant antenna reactances X_{La} and X_{Ca} (which were unwisely obtained from Q) in his Fig. 2. By incorrectly assuming a Q of 10, the resulting 400 Ohms obtained for reactances X_{La} and X_{Ca} is less than half the true value of the resonant reactances found in antennas having the dimensions of a typical coaxial dipole resonant at 3.75 MHz (length L = 125 feet, and diameter D = 0.140 inches). Using the incorrect 400 Ohms as the basis for the swr calculations resulted in the optimistic, but *impossibly-low* swr values in Fig. 8. Ironically, when this error in reactance is corrected, and the affected arithmetic recalculated, the resulting swr values are nearly the same as those obtained in my analysis. Thus a conclusion similar to mine must also follow. Directly related to the improper choice of Q in determining the value of X_{La} is the contention that Q is lower when an antenna is near earth than when it is in free space. The opposite is actually true. I will show later how Q was used improperly, why it is unwise to obtain X_{La} from Q, and why Q is *higher* when an antenna is near earth than when it is in free space. I will also outline a procedure for calculating the value of X_{La} from the L/D ratio, which entails less chance for error than when using Q.

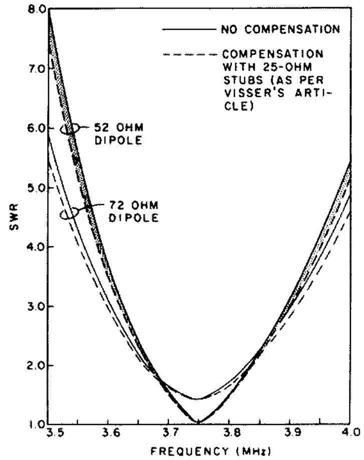

Fig. 1.

Obtaining Corrected Value of X_c for Swr Calculations

So let's ignore Q momentarily, and start with the basic length-to-diameter ratio L/D = 125′/0.140″ = 10,714. From this ratio, which determines antenna inductance L_a and capacitance C_a in his Fig. 2 (detailed procedure comes later), we obtain the correct value of 846 Ohms for reactances X_{La} and X_{Ca} at the 3.75-MHz resonant frequency, instead of the incorrect 400 Ohms shown in Fig. 2. Using X_{La} = 846 Ohms in calculating the off-resonance antenna reactance X_c at 3.5 MHz yields 117 Ohms, in contrast to the 55.24 Ohms in Fig. 3. It's too bad this error wasn't detected early on by simply checking the 55.24 Ohms in a universal graph of antenna resistance and reactance versus radiator length (or frequency), with L/D ratio as a parameter. Such a graph appears in the *ARRL Antenna Book*, and in many textbooks on antennas, such as Jordan and Balmain,[4] Schelkunoff,[6] or King[7] (and in Figs. 2 and 4 of my analysis[1]). Another way of confirming the error will be disclosed later.

Because of the simplified procedure used to obtain it, this corrected off-resonance reactance of 117 Ohms is still only an approximate value. To calculate antenna-terminal impedances that agree more closely with the measured data requires more complex mathematical procedures, such as those of Schelkunoff[6] or King,[7] from which universal impedance graphs are generated. Thus from King we obtain a more accurate and realistic off-resonance antenna reactance: X_c = 108 Ohms at 3.5 MHz for our L/D ratio (see Table 2).

Impact of Wrong X_{La} from Improper Selection of Q

To confirm the catastrophic impact on the conclusion, let's now compare the results using the correct reactance with those using the incorrect reactance. First, using the corrected value of reactance, X_c = 108 Ohms with resistance R_a of 40 Ohms, we get a realistic swr of 7.75:1 at the antenna terminals at 3.5 MHz instead of the impossibly-low 3.27:1 shown in his Figs. 3 and 8. Why is the 3.27 impossibly low? Because to obtain a raw, uncompensated swr of only 3.27:1 at 3.5 MHz with R_a = 40 Ohms, it would require a dipole diameter of 3.1 inches—22 times larger than the 0.14″ diameter of RG-

58/U coax. Remember, RG-58/U is a thin radiator at 3.5 MHz!

Second, a 7.75:1 swr agrees closely with data obtained during hundreds of my measurements of similar conditions using a General Radio rf impedance bridge, Model GR-1606A (also see Borton,[9] Fig. 2). In contrast to the ±10% accuracy specified for the swr indicator mentioned in the *73 Magazine* article (which cannot indicate reactance), the General Radio bridge has an accuracy capability of measuring resistance to within ±1%, and reactance to within ±2%.

Third, re-solving the parallel circuit problem of his Fig. 5 using the corrected reactance, X_C = 108 Ohms, instead of 55.24 Ohms, confirms the catastrophe, because the original compensated resistance of 116 Ohms (which yielded the 2.33:1 swr) now becomes 331.6 Ohms when the parallel-circuit reactance is canceled (using a shunt reactance X_L of 122.8 Ω, instead of 85.3 Ω). With a 331.6-Ω resistance terminating a 50-Ω line, the uncompensated 7.75:1 swr is reduced only to 6.63:1 (vs. 2.33:1!).

In proportion to the frequency difference, the corrected impedance, Z_a = 40 − j108 Ohms (7.75 swr), agrees closely with my measured data appearing in the 80 meter example on page 48 in my *Ham Radio* analysis,[1] and in *QST*[2]: At 3.55 MHz (50 kHz closer to resonance), I measured Z_a = 50 − j90 Ohms (5.04 swr). With perfect compensation the parallel-circuit resistance is 212 Ohms, reducing the 5.04 swr to 4.24. Thus the amount of mismatch reduction is also proportional. In addition, at 3.5 MHz I measured Z_a = 48 − j110 Ohms (6.90 swr). Note the close agreement with the corrected impedance, Z_a = 40 − j108 Ohms, especially the 110-Ohm reactance component. Bear in mind that both my data were measured with the GR-1606A rf bridge, and the corrected data represent near-earth conditions. Thus the errors in the Vissers data are confirmed. And in view of the close agreement between the data of these near-earth antennas and the free-space data appearing in Figs. 2 and 9b of my analysis,[1] the criticism of using free-space data in my analysis is clearly unjustified. More on this later.

Procedure for Obtaining X_{La} (and Q) from the L/D Ratio

Let's now see how the resonant antenna reactance, X_{La}, is calculated from the L/D ratio, from which we'll see the difficulties both in obtaining X_{La} from Q and in making an accurate assumption of Q unless X_{La} is already known. The basic antenna characteristic from which values of antenna inductance L_a and capacitance C_a may be obtained for use in the equivalent-series RLC circuit of Mr. Vissers' Fig. 2 is the average characteristic impedance, Z_O. Antenna Z_O is determined uniquely by the physical dimensions of the radiator. The value of Z_O may be obtained from the length-to-diameter ratio, L/D, using the expression $Z_O = 120(\log_e 2L/D - 1) = 120(\log_e 3000/0.140 - 1) = 1076.7$ Ohms (equation 1). Antenna inductance L_a and capacitance C_a may now be obtained from the expressions[5] $L_a = Z_O/8f_r$ (equation 2) and $C_a = 2/\pi^2 f_r Z_O$ (equation 3), where f_r = resonant frequency. Since L_a and C_a are both dependent on L/D and Z_O, both the inductive reactance, X_a, at resonance and the equally negative capacitive reactance, X_{Ca}, are also dependent on L/D and Z_O. Multiplying the expression in equation 2 by $\omega = 2\pi f$, we get the simple expression for obtaining X_{La}: $X_{La} = \pi Z_O/4 = 0.7854 Z_O = 845.64$ Ohms (equation 4). [Knowing Z_O, here is the other check method Vissers could have used to detect his reactance error, which also confirms that the correct antenna reactance (X_a) at 3.5 MHz is around 110 Ohms, not 55 (when resonant at 3.75 MHz). This method uses the well-known expression $X_a = -Z_O \cot \ell^\circ$. At 3.5 MHz, the electrical half length $\ell = 90^\circ \times 3.5/3.75 = 84^\circ$. Thus, $X_a = -1076.7(\cot 84^\circ) = -113.6$ Ohms.]

Antenna Q can now be determined from X_{La} and resonant resistance R_a using the expression[5] $Q = X_{La}/R_{a(resonant)}$ (equation 5). Observe in equation 4 that resonant resistance R_a (which is affected by proximity to ground) does not appear in determining the resonant inductive reactance X_{La}; thus X_{La} is independent of R_a. However, since X_{La} at resonance is determined by L/D, it is relatively constant, having only a slight variation with height above ground. In equation 5 we see that Q is dependent on X_{La}, and also varies inversely with the value of R_a at resonance. Since R_a at resonance varies appreciably with height, decreasing as height decreases below 0.2λ, Q thus *increases* as the antenna height decreases. Since Q and R_a both vary with antenna height, we can't assume to know the value of either Q or R_a at some arbitrary height for the purpose of determining X_{La}, unless accurate measurements of both Q and R_a are taken. Most amateurs don't have the equipment to perform these measurements with sufficient precision to yield a good value for X_{La}. And herein lies the key to Mr. Vissers' error: He has implied that the assumptions for his R_a and Q were based on his measurements. Although his assumption of R_a = 40 Ohms is realistic, his Q = 10 is not, because this combination yields the erroneous X_{La} = 400 Ohms, a value that can't exist with an L/D ratio of 10,714 at 3.75 MHz. However, since it is so easy to determine the accurate length and diameter of the radiating element, why not obtain X_{La} directly from L/D as described above? This way we avoid the uncertainties accompanying any attempt to determine X_{La} from R_a and Q. So let's now correlate some pertinent values based on the correct value of X_{La} (846 Ohms, obtained earlier from L/D), which will emphasize the importance of obtaining the correct value of X_{La}, if calculations based on this value are to have validity.

Why a Q of 10 Is Incorrect

The resonant resistance R_a of our RG-58 coaxial dipole in free space with an L/D ratio of 10,714 is 72 Ohms (73.13 Ohms when L/D = ∞, see King[7]), and the value of X_{La} from equation 4 is 846 Ohms. Thus, from equation 5, the free-space Q of the dipole is 846/72 = 11.75. However, when the antenna is at a height where R_a is reduced to 40 Ohms, the Q increases to 846/40 = 21.15, in contrast to Mr. Vissers' value of 10. On the other hand, if this arbitrarily-chosen Q of 10 were realistic with an R_a = 40, the value of X_{La} really would be 400 Ohms. However, this Q of 10 would have come from a free-space Q = 10 × 40/72 = 5.56, which defines an entirely different antenna. In fact, as stated earlier, a value for X_{La} of 400 Ohms at 3.75 MHz requires that diameter D = 3.1 inches,

22 times thicker than that of RG-58/U, for an L/D = 487. To use Mr. Vissers' own words, that is a big difference!

Effect of Height on Antenna Q

The subject of antenna height and its effect on Q is another area of concern in the *73 Magazine* article,[3] because two conflicting concepts appear that are rather puzzling. On one hand, he used the expression $Q = X_{La}/R_a$ (equation 5), and its inversion $X_{La} = R_a \times Q$, which state correctly that when R_a decreases, Q increases. On the other hand, "after much thought" concerning the results of his measurements, he concluded that because of the unavoidable losses incurred when the antenna is near ground, the Q is lower than when the antenna is in free space. This conclusion is puzzling, because it is well known that when dipole height is less than 0.2λ, the antenna resistance, R_a, is less than the free-space value. Since equation 5 shows that Q varies inversely with R_a, antenna Q near ground becomes higher than the free-space value, rather than lower. This discrepancy in his conclusion, and the erroneous assumption that Q = 10, raises serious questions concerning the measuring equipment, technique, and evaluation of the data.

Now, the matter in which R_a changes with height over actual ground (in contrast to perfectly-conducting ground) is complicated by several factors, including the dissipative losses he mentioned. However, the actual value of R_a is determined by the integrated effect of all the contributing factors in any given set of ground-proximity conditions. Thus the value R_a = 40 Ohms includes the effect of these losses, and R_a and X_{La} determine the Q actually existing under those conditions. On the other hand, if the ground were perfectly conducting, the mutual coupling between the antenna and its ground-reflected image would be greater for the same height, due to the absence of the ground losses. When height is less than 0.2λ, this larger coupling results in a lower value of R_a, and a correspondingly higher Q than when the antenna is over actual ground. Perhaps he really meant that because of the ground-associated losses, the Q of an antenna over actual ground is lower (and the R_a higher) than *if* it were over perfectly-conducting ground. In any event, the Q of an earth-oriented antenna is higher, not lower, than the same antenna in free space. Thus, it is not true that "because earth-oriented antennas have a lower Q" they yield a greater degree of bandwidth improvement using shunt-stub compensation than those in free space.

Ignoring Feedline Attenuation Spells Trouble in Fig. 9

Let's now examine Fig. 9, which is called the "proof of the pudding." The experimental data of Fig. 9 is said to *prove* that the coaxial dipole is working, because it is said to correlate with the theoretical data of Fig. 8 (which we have shown to be erroneous), and because "it indicates that the swr improvement is even better than the calculations predicted." Unfortunately, Fig. 9 provides no such proof. On the contrary, Fig. 9 reveals that he shares a widespread misconception concerning the correlation between theoretical and practical aspects of antenna systems evaluation. In reality, the graph in Fig. 9 proves only that the swr values shown are those measured at the input to a feedline, and that some amount of change in swr at the load (antenna) resulted from changing the stub conditions. Regardless of the caption, the graph reveals no quantitative data whatever concerning swr at the antenna, because the true dipole swr values are masked by an unknown feedline attenuation between the line input and the antenna terminals. It's like trying to identify a pea beneath a mattress, because we know both from the corrected calculated data and from measurements that the true values of dipole swr are nearly 2½ times larger than those shown in Fig. 8.

Necessity for Line-Attenuation Data

If the swr is measured at the feedline input simply to ascertain transmitter loading conditions, then line-attenuation data is unnecessary. On the other hand, if the line-input measurements are for ascertaining the matching conditions at the antenna, then feedline-attenuation data is absolutely essential. The attenuation data is needed to obtain the input-output proportionality factor required to calculate the magnitude of the reflection coefficient (mismatch) at the load from that measured at the input. But no attenuation data is given for the curves in Fig. 9. Thus the numbers on the scale labeled "MEASURED SWR" are meaningless with respect to swr at the antenna, because their mathematical relation to the antenna terminals is unknown. If the line attenuation were zero (which it isn't), then the curves, as labeled, would represent the true swr values of the antenna. On the other hand, if the attenuation were 2.06 dB, then the 2.85:1 swr of curve A at 3.5 MHz would represent the recalculated 7.75:1 swr appearing at the antenna terminals. Thus, to indicate swr at the antenna, the scale factor of the "MEASURED SWR" scale must be tailored to fit the line input-output proportionality factor obtainable only from the line attenuation. A procedure for obtaining this proportionality factor is outlined (with solved examples) in Appendix 4 of my analysis in *Ham Radio*.[1]

The data in Table 1 illustrates the necessity of attenuation data, showing, for example, that by simply increasing the line attenuation from 2.06 to 3.18 dB, a 2.85:1 swr would still appear at the feedline input with the far end either short circuited, or left open circuited. In other words, by measuring at the line input, one could not distinguish between the separate loads of either zero Ohms or an infinitely-high

With Line Attenuation α	Swr at Line Input: When Load Z_L = 40-j108 Ohms	When Load Z_L = SC (0 Ohms) or OC (∞ Ohms)
0.0 dB	7.75	∞
0.25	6.36	34.8
0.5	5.40	17.4
1.0	4.17	8.7
1.5	3.41	5.85
2.0	2.90	4.42
2.06	[2.85]	4.30
3.0	2.26	3.0
3.18	2.18	[2.85]
4.0	1.89	2.32
5.0	1.64	1.92

Table 1. SC = short circuit; OC = open circuit.

resistance.

Murphy Nearly Scored, but Two Wrongs Don't Make a Right

The fortuitous similarity of the incorrect theoretical data in Fig. 8 and the meaningless measured data in Fig. 9 is unfortunate and misleading because, for those unfamiliar with the effects of line attenuation, the comparison of these figures supports the widespread misconception that measurements at the line input directly indicate conditions at the antenna. And indeed, this misconception trapped Mr. Vissers into the most catastrophic error in his coaxial-dipole projects, because it misled him to believe that his stubs were performing well, even though they were performing as described in my *Ham Radio* analysis. By ignoring the effect of feedline attenuation, the *accidental* agreement between the low-swr values of Fig. 9 measured at the line input, and the unsuspected, incorrect, theoretical antenna swr data in Figs. 3 and 8, misled him to believe that both graphs were correct and valid antenna terminal data, and that the measured data supported the theoretical data. On the contrary, if he had calculated in the effect of the feedline attenuation on the line-input swr values of Fig. 9, he would have obtained values of dipole swr that are vastly greater than those of Fig. 8 at the corresponding frequencies. This discrepancy would have alerted him to go back and find the initial error (the wrong value of X_{La}) in calculating the Fig. 8 data. This is the second opportunity at which the error could have been detected. Had the error been detected at either point, the case for the coaxial dipole would have evaporated. Unfortunately, it is fairly common to see published curves purporting to show measured antenna bandwidth characteristics, without providing any feedline attenuation information. Such curves convey no more clues to truth in antenna performance than Mr. Vissers' Fig. 9, so he is not alone.

In addition to line attenuation, there are other factors that contribute to misleading indications when measuring swr at the line input. More often than not, swr-indicator readings are somewhat lower than the real swr values appearing at the line input. And with the coaxial dipole, the external dielectric covering on the coax-cable radiator causes a mild increase in antenna bandwidth, from the combination of increased antenna capacity C_a and additional ohmic loss due to dissipation in the dielectric. (I raised this point in *QST*.[2]) These factors make it impossible to calculate the true terminal impedance and swr of the dielectric-covered dipole (for Fig. 8) with any degree of certainty, although the swr is certain to be somewhat less than the 7.75:1 that we calculated previously for a bare wire of D = 0.14 inches. The best way to find out for sure is to determine the attenuation of the feedline used in obtaining the data for Fig. 9, re-measure the data with an accurate impedance bridge, and then perform the calculation to transfer the swr values at the feedline-input terminals to the antenna terminals.

Impedance Relations in Free Space Versus Near Earth

Let's now return to the discussion concerning the effect of free-space versus near-earth conditions in relation to antenna impedance and bandwidth, to discover why Mr. Vissers' belief that the coaxial dipole performs better near earth is erroneous. He agrees with the conclusion in my analysis that the reactance shunting used in the coaxial dipole is ineffective for increasing bandwidth when the dipole is in free space and fed with 50-Ohm feedline. However, he believes this technique is effective with lower antenna resistance, R_a, as found in 80 meter antennas at normal heights. Unfortunately, in expecting an improvement in the broadbanding capabilities of reactance shunting by reducing resistance R_a from the free-space value of 72 Ohms to around 40 Ohms, he is overlooking two basic principles of impedance matching, one underlying the shunt-reactance method of increasing the bandwidth, and the other concerning the minimum-swr resistance in a complex load impedance. The vital aspects of the shunt-reactance method that were overlooked are disclosed in my *Ham Radio* analysis[1] (page 50), and the minimum-swr resistance principle is described in a paper I published in *QST*.[6] However, the following discussion may be helpful in clarifying the conflict.

In the conventional method of matching, antenna resistance R_a, at resonance, is usually nearly equal to the line impedance, Z_C. Typically, R_a can be anywhere from 40 to 72 Ohms when Z_C = 50 Ohms (a 1.4:1 mismatch is considered insignificant). With this nearly one-to-one ratio between the line and load impedances at resonance, the mismatch rises continuously on either side of resonance, because the ratio between the two impedances increases, due to the increasing reactance, X_a. Now if we simply add reactance shunting to the antenna terminals to cancel the antenna reactance, the shunt reactance cannot perform effectively in reducing the mismatch off resonance, as long as the impedance ratio is already nearly one-to-one at resonance. The reason is because the shunt reactance cannot yield a significant reduction in the off-resonant antenna impedance—it can only exchange a *reactive* terminal impedance for a *nearly-equal resistive* impedance. Thus the impedance ratio remains high, and as I explained in the analysis[1] and illustrated with a numerical example in *QST*,[2] when the feedline-to-antenna impedance ratio is high, the mismatch is nearly the same whether the antenna terminal impedance is reactive or resistive. Thus the shunting is ineffective, as shown in Fig. 10B in my analysis, and in Fig. 1 in this article.

On the other hand, consider the relationship where the feedline-to-antenna impedance ratio is within the range where the shunt-reactance method can perform effectively. By using a feedline of higher impedance, increased by a factor of two-to-one or more (and accepting a similar compromise in mismatch at resonance), the ratio between the reactive off-resonant antenna impedance and the line impedance is reduced proportionally. With this lower off-resonance impedance ratio, the exchange of a reactive load impedance for a resistive impedance resulting from the reactance shunting now yields a significant reduction of off-resonance mismatch, as Fig. 4 of my analysis shows.

The Crucial Factor in the Resistance Versus Off-Resonance-Mismatch Relationship

The crucial factor in this

relationship is this: The vital reduction of the off-resonant, line-to-antenna impedance ratio obtained by increasing the line impedance cannot be duplicated by reducing the antenna resistance R_a unless the antenna reactance X_a is also reduced proportionally, because it is mainly the off-resonance reactance that causes the high antenna impedance. Naturally this inherent reactance cannot be reduced unless the radiator itself is redesigned. So when the resistance is reduced without also reducing the reactance, the off-resonance impedance relationship is entirely different from that obtained by increasing the line impedance.

To discover how reducing only the resistance R_a affects mismatch, let's experiment with a dipole. Starting with $R_a = 72$ Ohms at resonance, we'll make a series of frequency excursions to the ends of the band, and at each successive excursion we'll reduce only the resistance, so that all values of R_a versus frequency are lower than those of the preceding excursion. The result is that at any frequency where the swr exceeds about 2:1, the mismatch and swr become LARGER as the resistance becomes LOWER. And the greater the swr, the less improvement reactance shunting can provide, for the reason explained earlier. So while the mismatch improvement by reactance shunting is already insignificant when $R_a = 72$ Ohms (as Mr. Vissers agrees), it becomes worse when $R_a = 40$ Ohms, not better.

It is true that reducing the resonant antenna resistance from 72 to 40 Ohms improves the inherent match slightly in the region near resonance (from 1.44 down to 1.25:1). However, this is not the region where mismatch reduction is needed; the reduction is needed in the regions toward the band ends, where the inherent, uncompensated swr exceeds 2:1, and it is in these regions where Mr. Vissers' theory fails, and where the shunt-reactance method cannot provide significant improvement for a thin dipole when fed with a 50-Ohm feedline.

The relationship between resistance and off-resonance mismatch is shown in Fig. 1 (a graph from data of Table 2, which will be explained shortly), where we can see the significant difference in the way dipole swr changes between frequencies near resonance and those nearer to the band edges, depending on whether the antenna resistance R_a at resonance is 52 Ohms or the free-space value of 72 Ohms. With the 52-Ohm antenna the match is nearly perfect at resonance, and thus remains somewhat better than the 72-Ohm antenna out to around a 2:1 swr. However, at frequencies where the swr is greater than 1.7:1 below resonance, and 2.2:1 above resonance, the match is consistently worse with the 52-Ohm antenna. From calculations not shown in Table 2, the match quality of an antenna having a 40-Ohm resonant R_a deteriorates much more rapidly than the 52-Ohm antenna, especially near the band-edge frequencies where we need the mismatch reduction the most.

The Basis for the Graphs and Tables

The swr values appearing in Fig. 1 and Table 2 were calculated from the terminal impedances of both a free-space and an earth-oriented dipole, with three different stub-matching conditions for each: 1) no stubs; 2) 25-Ohm stubs; and 3) optimum stubs. To make a valid comparison of the mismatches associated with these different stub conditions requires authentic impedance data. Because dipole resistance R_a changes significantly with frequency (see Table 2), it is improper to calculate the mismatches using a constant resistance $R_a = 40$ Ohms across the band (as Mr. Vissers has done). Therefore, the free-space data appearing in Fig. 1 and Table 2 is authentic impedance data taken from King,[7] the same as used in my analysis.[1]

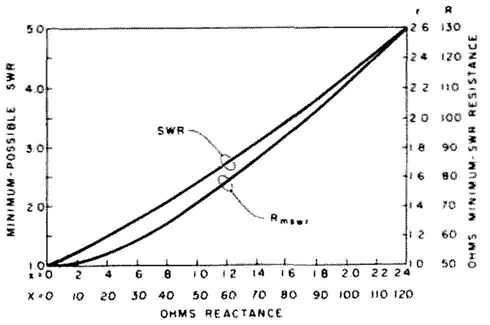

Fig. 2.

For the earth-oriented impedance data, resistance values of $R_a - 20$ Ohms were selected for each corresponding frequency, to allow for the mutual coupling to the image dipole. The constant 20-Ohm difference between free-space and earth-oriented resistance versus frequency represents only a small compromise with the actual change in mutual resistance R_m across the band, and the $R_a - 20$-Ohm values closely represent those obtained with the reflection coefficient of average ground. Exceptionally high ground conductivity beneath the antenna is required to obtain values much less than 40 Ohms anywhere within the band at any height using a straight dipole, although lower values can be obtained with inverted-Vs having included angles of considerably less than 180 degrees. The $R_a - 20$-Ohm values include 68 Ohms at 4.0 MHz, 52 Ohms at resonance, down to 38.5 Ohms at 3.5 MHz.

At average 80 meter antenna heights, the mutual reactance X_m is small, so the change in terminal reactance X_a with height is negligible, as confirmed by extensive measurements. Therefore the same values of X_a were used in both the free-space and earth-oriented conditions. Of course, earth-oriented impedances vary with location. However, the impedances selected as previously described are typical of the average amateur situation, and are valid for demonstrating the general relationship between antenna resistance and mismatch (both with and without stubbing). In other words, measured values are not expected to repeat the data in Table 2 exactly, but in general the improvements due to stubbing will be fairly proportional to those appearing in Table 2. It should be kept in mind, as explained earlier, that with 50-Ohm feedline, the ratio of off-resonance antenna-to-feedline impedance is too high for the stubbing to have a significant effect.

However, it should be clearly understood that the

Table 2 values showing swr improvement are the precise values that will result strictly from the shunt reactance alone for the given impedance conditions—no greater improvement than this can be obtained from the shunting itself, because the calculations based on pure, lossless reactance yield precise answers. However, if measured values *do* indicate a significantly greater amount of improvement than shown in Table 2 under the same conditions of uncompensated impedance, it means that additional phenomena are also contributing to the effect obtained with lossless stubs. Such phenomena include ohmic loss of the stubs which we haven't considered (the actual stubs aren't lossless), and the effect of the external dielectric, which is a separate contribution that is practically impossible to predict. But remember, any such "improvement" resulting from ohmic loss represents power that isn't radiated.

The Minimum-Swr-Resistance Principle

When a load terminating a feedline is resistive, as in an antenna operating at resonance, the mismatch between the line and the load impedances is found by simply dividing the larger impedance by the smaller. However, as with all amateur antennas, when the load is the complex impedance $Z_a = R_a + jX_a$ of an antenna operating off resonance, the relationship between line impedance Z_C and mismatch is no longer a simple one. So appreciation of the swr values in Fig. 1 and Table 2 is understandably difficult. Directions for calculating the swr values are outlined in Appendices 1 and 2 of my analysis,[1] but textbook study is required for an in-depth appreciation of the concepts. However, although not well known among amateurs, the minimum-swr-resistance[8] principle provides an elegant means for correlating complex load impedance with feedline impedance in a way that provides an unusual viewpoint in appreciating the effect of resistance on the match quality when the load contains reactance. So let's examine the minimum-swr-resistance principle.

In a series complex load impedance, Z_L, comprising a resistance R and reactance X, if the resistance is varied but the reactance is not, there is a single value of resistance, R_{mswr} (called the minimum-swr resistance), that will cause the load to produce a minimum of mismatch when terminating a generator or line. Unless X = 0, R_{mswr} will be greater than the line impedance Z_C. When the component values in the load are normalized to the line impedance Z_C (yielding $R/Z_C = r$, and $X/Z_C = x$), the value of the normalized minimum-swr-resistance $r_{mswr} = \sqrt{x^2 + 1}$ (equation 6).[8] When the load $Z_L = R_{mswr} + jX$, the mismatch value equals the sum of the normalized components of the load; i.e., swr $= r_{mswr} + x$ (equation 7).[8]

This principle tells us that for a given value of reactance, X, in a load in series with resistance R_{mswr}, any change in resistance (either higher or lower) will cause the swr to rise. For example, let's find the value of R_{mswr} for a reactance X = 50 Ohms with a 50-Ohm line, and compare the mismatch the combination produces with the mismatches from two other impedances having the same reactance, but one having a higher resistance and the other a lower resistance. Thus, $Z_L = R_{mswr} + j50$ Ohms, and by normalizing becomes $z = R_{mswr} + j1.0$. The value of r_{mswr} (determined solely from x) is $\sqrt{x^2 + 1} = \sqrt{1^2 + 1} = \sqrt{2} = 1.414$. De-normalizing, $R_{mswr} = 50 \times 1.414 = 70.71$ Ohms, so the desired impedance is $Z_L = 70.71 + j50$ Ohms. The swr produced by this impedance is $r_{mswr} + x = 1.414 + 1 = 2.414$, the minimum-possible swr when $X = Z_C = 50$ Ohms. (This treatment works only when $r = r_{mswr}$.) Now, using the expressions from Appendices 1 or 2 in my analysis[1] to calculate the swr produced by general complex load impedances, we find that impedances $Z_L = 50 + j50$ and $100 + j50$ both yield the identical value of swr = 2.618:1, which is higher than the minimum-possible 2.414:1 produced by the impedance 70.71 + j50 Ohms. Additional calculations show that as the resistance goes either lower than 50 Ohms or higher than 100 Ohms, the swr continues to rise above 2.618:1. For example, $Z_L = 25 + j50$ yields 4.266:1, and 125 + j50 yields 2.962:1. However, note that the swr rises slowly as R increases above 100 Ohms, but rises rapidly when R decreases below 50 Ohms.

This minimum-swr-resistance principle is completely general, working for any value of reactance X and line impedance Z_C. Thus we have a powerful tool for investigating any complex antenna-terminal impedance Z_a as the load for determining which direction the swr will go with a change in resistance R_a. Fig. 2 contains a plot of R_{mswr} versus reactance X (including the normalized values for x) for values of X from zero to 120 Ohms with a line impedance Z_C of 50 Ohms. For convenience, the corresponding minimum-possible-swr values are also plotted. To use the graph in determining whether the swr will rise or fall with a given change in antenna resistance R_a, we first determine the reactance component X_a of the antenna impedance. From either the graph, or equation 6, we then find the corresponding minimum-swr-resistance, R_{mswr}. If resistance R_a is lower than R_{mswr}, raising the value of R_a will reduce the swr (until $R_a = R_{mswr}$), and vice versa. If R_a is higher than R_{mswr}, raising the value of R_a will increase the swr, and vice versa. Since R_{mswr} is 50 Ohms when X = 0, R_{mswr} does not go lower than 50 Ohms. Thus if resistance R_a is less than 50 Ohms, increasing the value of R_a will decrease the swr for whatever the value of reactance X_a, including $X_a = 0$. However, to reach the minimum-possible swr when any reactance is present, resistance R_a must be higher than 50 Ohms, and the greater the reactance, the higher resistance R_a must be raised.

Verification Using the Minimum-Swr-Resistance Principle

Turning now to Table 2, the values of minimum-swr-resistance R_{mswr} listed there (from the data of Fig. 2) are the values which yield the lowest possible mismatch when in series with the corresponding reactance X_a at the indicated frequency. In other words, if resistance R_{mswr} for the corresponding reactance were to replace the actual antenna resistance R_a, we would obtain the lowest swr that is possible with that particular reactance X_a in the circuit. The values of the corresponding minimum-possible swr are also listed in Table 2.

In using this technique to confirm our previous conclusions based on calculated values of swr, let's first examine the con-

F_{MHz}	Antenna Impedance Components[7]					Mismatch or Swr					
						Uncompensated dipole		Compensated with 25Ω stubs		Compensated with optimum stubs	
	Ohms Resistance		Ohms React.	Ohms Resis.	Min.-Possible	Free-Space	Near-Earth	Free-Space	Near-Earth	Free-Space	Near-Earth
	R_a	R_a-20	X_a	R_{mswr}	Swr	R_a	R_a-20	R_a	R_a-20	R_a	R_a-20
3.5	58.5	38.5	-108.00	119.0	4.54	5.84	8.00	5.50	7.50	5.16	6.83
3.55	60.8	40.8	-86.50	99.9	3.73	4.27	5.53	4.04	5.19	3.71	4.58
3.6	63.4	43.4	-64.79	81.8	2.93	3.05	3.68	2.92	3.49	2.67	3.03
3.625	64.75	44.75	-53.94	73.55	2.55	2.58	2.98				
3.65	66.1	46.1	-43.08	66.0	2.18	2.18	2.39	2.12	2.30	1.97	2.03
3.675	67.6	47.6	-32.24	59.5	1.83	1.86	1.92				
3.69	68.5	48.5	-25.74	56.24	1.64	1.70	1.68				
3.7	69.1	49.1	-21.40	54.4	1.52	1.62	1.54	1.60	1.50	1.54	1.38
3.75	72.0	52.0	0	50.0	1.00	1.44	1.04	1.44	1.04	1.44	1.04
3.8	75.1	55.1	21.92	54.6	1.53	1.71	1.53	1.69	1.50	1.69	1.49
3.825	76.6	56.6	32.80	59.8	1.85	1.95	1.86				
3.85	78.2	58.2	43.58	66.3	2.20	2.24	2.23	2.19	2.15	2.14	2.05
3.9	81.3	61.3	65.24	82.2	2.95	2.95	3.11	2.85	2.97	2.74	2.77
3.95	84.8	64.8	87.15	100.5	3.75	3.81	4.17	3.61	3.96	3.51	3.69
4.0	88.0	68.0	109.24	120.1	4.59	4.83	5.42	4.61	5.13	4.47	4.87

Table 2.

ditions at 3.825 MHz. At this frequency the lower-height (R_a − 20, or 52-Ohm) antenna yields a slightly better match near resonance because its 52-Ohm resonant resistance is nearer to the 50-Ohm line impedance than the 72-Ohm free-space antenna. From Table 2, at 3.825 MHz, X_a = 32.8 Ohms, and the minimum-swr-resistance R_{mswr} = 59.8 Ohms. If the actual resistance R_a − 20 were 59.8 Ohms, the swr would be 1.85:1, the lowest swr possible with 32.8 Ohms of reactance in the circuit. However, at this frequency the actual resistance R_a − 20 = 56.6 Ohms nearly equals the minimum-swr resistance, yielding a 1.86:1 swr for the 52-Ohm antenna (only slightly higher than the minimum), in contrast to the higher value R_a = 76.6 Ohms for the free-space antenna, with a 1.95:1 swr. This explains why the 52-Ohm antenna yields a slightly better match than the 72-Ohm antenna at this frequency.

On the other hand, at 3.5 MHz the minimum-swr-resistance technique demonstrates rather dramatically why the off-resonance mismatch increases when the antenna resistance at resonance is reduced. Again from Table 2, at 3.5 MHz the reactance X_a = −108 Ohms is shown to require a resistance R_{mswr} of 119 Ohms to obtain the lowest-possible swr, which is 4.54:1. The free-space and near-earth dipole resistances at 3.5 MHz are 58.5 Ohms and 38.5 Ohms, respectively. Thus, the free-space resistance is 60.5 Ohms below the optimum 119 Ohms, which increases the swr to 5.84:1. However, with the 38.5-Ohm resistance of the near-earth antenna, the swr has soared to 8.0:1, because the 38.5-Ohm resistance is 20 Ohms lower yet than the free-space value, or 80.5 Ohms below the optimum value. Now, since the free-space value of 58.5 Ohms is already 60.5 Ohms below the optimum value of R_{mswr} of 119 Ohms, it is clearly evident that to obtain a lower swr than the free-space value of 5.84:1, the resistance R_a must be increased, rather than decreased. Moreover, an examination of all remaining data points listed in Table 2 reveals that the values of R_{mswr} and minimum-possible swr confirm the direction in which every value of dipole swr changed resulting from a corresponding change in dipole resistance R_a.

As an additional point of interest, compare the curves appearing in Fig. 8 of the *73 Magazine* article[3] with those of my Fig. 1, and note the asymmetric shape of my swr curves with respect to the center frequency of 3.75 MHz. While the (+) and (−) reactances, X_a, are almost symmetrical (see Table 2), the values of swr below center are higher than those at the same difference in frequency above center. The reason is that resistance R_a is decreasing below center, and increasing above, and the swr values are simply following the minimum-swr-resistance principle. On the contrary, the Vissers curves are unrealistically symmetrical, because in his swr calculations the constant value R_a = 40 Ohms was used (incorrectly) across the entire band.

Conclusion

In comparing the swr curves of the 72-Ohm and 52-Ohm antennas in my Fig. 1, it is evident that no great dramatic difference exists between them. However, these two curves represent the effect of the "big difference" that was asserted to exist between my free-space 72-Ohm dipole and a dipole near earth. This is the "big difference" that was predicted would change the insignificant stub contribution in my "irrelevant" free-space coaxial dipole into a workable, worthwhile contribution by "bringing the dipole down to earth." Obviously, the dramatic change that was predicted doesn't materialize, and the positions of the curves in my Fig. 1 indeed show that the dipole near earth is even less effective than when in free space. Thus, despite Vissers' statement to the contrary, these curves more than justify the use of free-space data in my analysis that enables the amateur to recognize the conditions under which the stubs in a coaxial dipole will or will not provide a worthwhile improvement in bandwidth.

Perhaps not everyone will agree on just what constitutes a worthwhile, significant improvement in swr. So if anyone decides the meager improvement shown in Fig. 1 and Table 2 is worth the constructional effort and cost required to

obtain it with shunt stubs, fine and dandy. But if you appear to be measuring considerably more bandwidth at the antenna than indicated in Fig. 1, you are quite likely to be fooling yourself. Remember that unwanted ohmic losses can raise an otherwise-low terminal resistance, thus reducing the swr via the minimum-swr principle, but at the expense of losing power to heat. In any case, as a professional antenna engineer, my boss would hand me my head on a platter within seconds if I seriously presented him with this shunt-stub method as a viable solution to the 80 meter broadbanding problem when using 50-Ohm feedline. ■

Addendum

Mr. Vissers raised an important point concerning Borton's work,[9] in that my analysis failed to mention the swr differences Borton obtained between a coaxial dipole and the bow-tie antenna constructed from galvanized wire. There are two reasons why I omitted reference to this topic: First, my article was already too long. More importantly, several cloudy issues concerning both of these antenna forms need clarifying before I can discuss them knowledgeably.

For example, in the coaxial dipole: What precise, quantitative effects result from the external dielectric covering? Well, Z_O, X_{La}, and Q are all reduced by the resulting increase in antenna capacitance C_a. But how much? Does this yield an efficient increase in bandwidth? And how much does the dielectric covering increase the dissipation loss, reducing the efficiency while raising the terminal resistance and reducing the swr? As I stated in *QST*,[2] further investigation is necessary.

Concerning the galvanized wire, the higher resistance of the zinc covering is probably causing the lower swr, but more investigation is required here also: What is the thickness of the galvanizing? Is it greater than the rf skin depth at 4 MHz? If so, what is the total series surface resistance at rf? Compared to copper? Enough to account for the difference in swr? Does the magnetic effect of the iron in the wire influence the phase velocity of the rf wave? So far, I have been unable to pursue these questions. I had planned future collaboration with Borton for futher investigation into the rf properties of galvanized iron wire. I regret that such collaboration is no longer possible, because Dwight Borton recently became a silent key. I will think of him as I proceed alone.

References

1. Walter Maxwell W2DU, "A Revealing Analysis of the Coaxial-Dipole Antenna," *Ham Radio*, August, 1976, p. 46.
2. Walter Maxwell W2DU, "The Broad-Band Double-Bazooka Antenna—How Broad Is It?", *QST*, September, 1976, p. 29.
3. William Vissers K4KI, "Build A Double Bazooka," *73 Magazine*, August, 1977, p. 36.
4. Jordan and Balmain, *Electromagnetic Waves and Radiating Systems*, 2nd Edition, Prentice-Hall, Englewood Cliffs NJ, p. 548. (Caution: Values shown are for monopole; multiply by 2 for dipole.)
5. *Ibid.*, p. 388.
6. Schelkunoff and Friis, *Antennas, Theory and Practice*, Wiley, 1952, pp. 436-455.
7. Ronold W. P. King, *Theory of Linear Antennas*, Cambridge University Press, Cambridge MA, p. 176.
8. Walter Maxwell W2DU, "Another Look At Reflections," Part 5, *QST*, April, 1974, p. 161, equation 11.
9. Dwight Borton W9VMQ, "Wide-Bandwidth Bow-Tie Antenna for 80 Meters," *Ham Radio*, May, 1975, p. 56.

The Packet Radio Revolution

—pioneers, take note!

Editor's Note: Shortly before press time, the Canadian authorities announced the creation of a new "Amateur Digital Radio O[illegible]ator's Certificate," a no-code license allowing certain experimenter privileges, including packet radio, in the amateur bands above [illegible] MHz. Certain portions of the 220 and 440 MHz bands have been reserved exclusively for packet transmissions.

Robert T. Rouleau VE2PY
1050 Churchill
Montreal, Quebec
Canada H3R 3B6

Not with a bang, but with sort of a swish, the "packet" revolution began. On May 31, 1978, the Montreal Amateur Radio Club sent the first amateur packets. The face and sound of amateur radio will never be the same again. Space-age radio arrived for amateurs. Our communications will be faster, more accurate, more reliable, and use less spectrum.

If you haven't heard of packet radio, don't be surprised. It is new. Don't look in the *Handbook* or your favorite ham magazine, either. You'd have more luck researching doctoral theses for information. Right now, there are about two dozen packet systems up and running in the world. None of them are amateur and none of them contemplate the number of users that an amateur radio system would.

Packet radio is a name given to the time-division multiplexing of a radio channel. Large numbers of users can share one channel without QRM or hassles. Users don't even know that they are sharing the channel with anyone else. The name "packet" is derived from the fact that each message is sent in a package. It has three parts: the address and return address called the "header," the data or message part, and the "trailer," which is an error-detection scheme.

You can compare packet radio to a sort of instant electronic mail service. Each packet is a postcard. You put your message on the card, address it, and put on the return address. You then slip it in a mail slot which is your amateur radio station. If your message is too long for one postcard, then you'll just send a series of them. Once you slip it in the mail slot, the system delivers the card for you, or if it can't, it returns the card automatically.

How can so many users share one channel? Speed. Packets are sent from 25 to 25,000 times faster than amateur RTTY. Let's compare packet RTTY to the amateur kind. To send a one-line message on 60 wpm Teletype™, y[illegible]u need about 10 seconds, and no one else can use the channel. The simple packet system we'll see later only takes 1/4 of a second to do the same thing. The other 9-3/4 seconds could be used for other messages, up to 40 of them, in fact.

How does it go so fast? There are two explanations. First, instead of using the channel while each letter is sent, we wait until the whole line is complete and send it in a burst. Second, the baud rate for our system is 2000 instead of 45 for amateur Teletype. It also fits in the same bandwidth! This is not a contradiction—we just use better modulation schemes which are capable of sending more information in the same bandwidth.

You are probably saying, "Why all this packet nonsense? It's just a faster Teletype setup." Not at all! You haven't heard the half

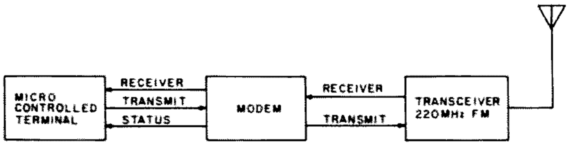

Fig. 1. Block diagram showing component arrangement of a typical packet radio station.

 Dec 1978

of it yet. The good part is still to come. Packets are digitally encoded. This means that anything that can be "digitized" can be sent in the packet: voice, RTTY, slow-scan, television, telemetry—you name it. Packet radio encompasses all modes! That's why we call the "message" part of the packet the data. It could be any one of a million things. But, that's not *all* the good stuff.

Since packets are in a digital format, they can be read and understood by simple computers. What if we had a microprocessor setup at a VHF repeater? The repeater could read the address on your packet and, if it was out of town, switch on a link transmitter and relay it towards its destination. Now if we had microprocessor-controlled repeater links all across the country, your packet could be delivered anywhere within the range of a repeater. Packets make this kind of network easy. We are now working on the design of a packet net called AMPAC (amateur packet), which will make this possible. Since packets contain an error-detection scheme at the end, checking a message to verify that it is intact is easy. If the packet was damaged, we could ask for a repeat automatically if our terminals were programmed to do so.

Let's look at a few of the applications for packet radio. On the HF bands, I bet the RTTY operators would like to have a system this fast which automatically calls for repeats of packets damaged by QRM and fading. For once, the copy would be clean all the way. The same would be true for the slow-scan TV crowd. The image would form line-by-line and with no snow! Moonbouncers already use a kind of burst technique. Your terminal would be programmed to send a packet, and then wait a predetermined length of time for a return message. If the return message didn't come, the original message would be repeated until it did. It could also log the callsigns and time that transmission was completed. Satellites are a natural for packets. The time-sharing aspect makes the satellites available to more people, and the communications are more reliable. The list is almost endless, and that's what makes packet so good.

If you've read this far, you probably want to know exactly how packet radio works. First of all, you will need a microprocessor-controlled terminal, which could be a TV typewriter or Teletype machine for hard copy. We'll look at a packet Teletype system to see how it works. You type out your message and the address of the receiving station. The terminal will fill in your call and address as well as do the error-detection calculations. When this is complete, it will be sent automatically. At the other end, a terminal will receive the packet and look at the address. If the packet is addressed to someone else, the terminal will dump it. Otherwise, it will check for transmission errors and, if the message is intact, the terminal will print it out or display it on the screen. It will also send an acknowledgement back to you. If it didn't arrive intact, it will send a negative acknowledgement. Your terminal, on seeing a negative acknowledgement, or "NAK," will retransmit the packet again, and will do so until it gets through or it is instructed to give up.

What if two terminals send at once? The packets collide and are wiped out. In this case, your terminal won't get the acknowledgement it is expecting, so it sends the packet again, and does so until it gets the acknowledgement it wants or is told to stop. To prevent two terminals from sending packet after packet at the same time, each terminal is instructed by its microprocessor to wait a random length of time before sending the packet again. The delay in our case would be from 1 to 4 seconds. Since the delay is random, and all the terminals have this routine built in, the chances of a second or third collision are very small.

The rules that the terminals follow are called the protocol. This term will be familiar to the computer people. The protocol makes every user feel as if he is the only one on the channel. You don't know that it is being shared. There is no QRM and no hassles. The protocol, which is written into the program of the microprocessor controlling your terminal, can be as simple or as complicated as you wish. The fancy ones make the system even more efficient and maximize the capacity of the channel, but involve more memory and software. The key is to make sure that all users of the local net play by the same rules.

The hardware you'll need is not fancy. A microprocessor, a keyboard input/output device, a radio, and a modem are all that is required. Our system runs on 220-MHz FM and uses the Western or Sangamo Model 201 modem, running at 2000 baud. We used this one because it was available surplus and was cheap. We run 220 because that's the only band in Canada we are allowed to use for packet right now. The radio feeds the modem which feeds the terminal. The modem outputs phase-shift keying using an 1800-Hertz tone so it can go right in the microphone jack. The output can come from the speaker line or, if you're fussy, right from the discriminator to the modem. The modem is RS-232 standard, so hooking it up to the computer is no problem. See Fig. 1.

We have only touched the surface of packet radio and its applications. Before you go any further, however, you will have to either move to Canada or convince the FCC that American amateurs should be allowed to use packet radio as well. As far as I know, Canada is the only country which is permitting amateurs to experiment with packet. I doubt that it will stay this way for very long. The prognosis is for amateurs to develop the first really large packet network on VHF and UHF which will be copied by commercial operations shortly afterward. Our satellites will be the proving ground for more packet techniques, and I bet commercial stations will be looking over our shoulders. Again, amateurs are getting into the act first. Who else could supply millions of free man-hours of research and development to the world? Right now there are a few centers doing research on packet radio. Stanford Research Institute is one, for instance, and while they may be better qualified than we are, we sure outnumber them!

Here, in Montreal, the few of us who have formed AMPAC will be pushing the technique for all it's worth. We are talking to AMSAT to get permission to use their satellites as well as negotiating with our government to get more packet privileges. We would be happy to talk to anybody who is interested in packet radio. ■

Dale Hileman WB6NTR
1132 Roseta Drive
Topanga CA 90290

This Voltage Standard Is Precise!

—and makes calibration a snap

Do you sometimes wish you had a stable voltage source for calibrating your DVM or the vertical amplifier of your dc scope, a source that would remain rock stable for months or years? Such an instrument is usually expensive to build or buy because it uses exotic components such as standard cells and perhaps a complex voltage divider to provide various output potentials. The voltage standard described here may suit your need perfectly, as it provides an exceptionally stable output voltage using ordinary off-the-shelf parts, and an unconventional "circular" voltage divider, using the minimum possible number of precision resistors, provides convenient switch-selected output voltages.

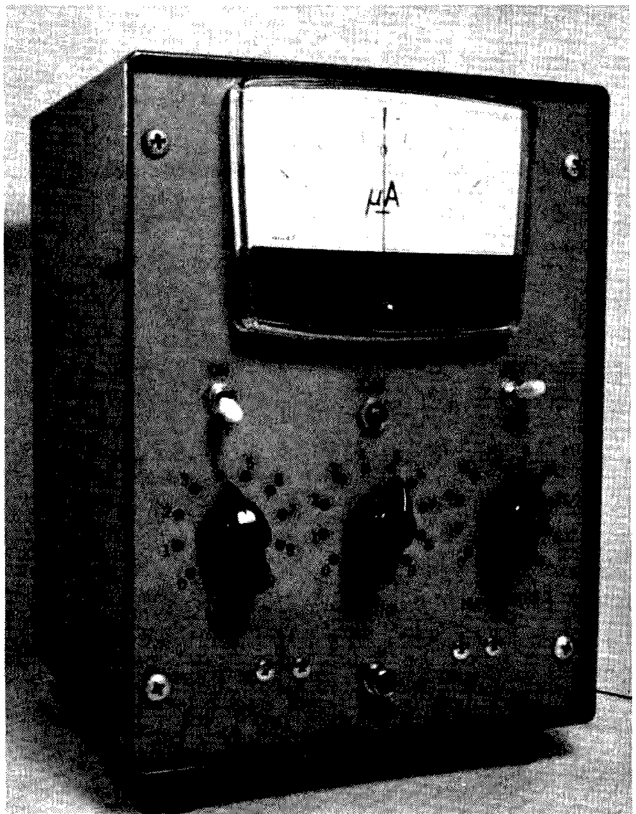

The unit is powered by two 9-volt batteries, and the output voltage is 0-10 volts in 10 millivolt steps, although finer voltage divisions may be obtained by adding stages to the voltage divider. A microammeter is connected in series with the output so that the instrument may be used to directly measure dc voltage.

Output stability is about ±0.04% over a battery-voltage range of 6-9 volts. This tolerance can be reduced virtually to zero if you elect to use a power source better regulated than batteries.

Thermal stability, over the range of temperatures less perfect, depending on your choice of parts. Admittedly, the unit must be calibrated against an accurate voltage standard or DVM but, once set, it will remain stable more or less indefinitely, depending again on your choice of parts. Accuracy of the switch-selected output voltages depends on the tolerance of the resistors you decide to use in the voltage divider. We have specified 0.1% resistors, so we get 0.1% accuracy. If you use 0.01% resistors, you will get 0.01% accuracy, but they will cost a lot more. Output resistance of the instrument is several thousand Ohms, but we will discuss means to circumvent the effect of loading on output voltage.

How It Works

Fig. 1 is a simplified diagram of the voltage standard, showing how the use of a "circular" voltage divider minimizes the number of resistors needed to obtain 1001 different output voltages. This article, as far as we know, is the first published application

tional voltage divider, the input voltage is applied across the entire network, and output is selected from the constituent resistors—but a disproportionally large number of resistors or a complex switching scheme is needed to get a large number of output voltages. In the circular voltage divider, the output voltage is taken from a fixed point, and this potential is selected by changing the location to which the input voltage is applied. This scheme simplifies the requisite switching and minimizes the number of resistors needed. In Fig. 1, the digit beside each resistor corresponds to the voltage obtained when that resistor is connected. Output in this example would be 6.43 volts.

The general rule applying to resistor values in the circular divider is this: Ten resistors are used in each ring except the last, which has eleven. The resistors in each ring are 1.1 times the value of the ones in the preceding ring. Thus, if you wanted an additional stage to get steps of 1 millivolt, you would substitute, for the terminating resistor R_T, another ring, containing 11 resistors of 1330 Ohms each. How did we know what value to start with in the first ring? Well, if too small, the selected resistor will unduly load the power supply. But making it, and all the other resistors, larger will proportionally increase the output resistance of the divider.

If you want to build the simplest possible divider, you can omit the selector switches and use alligator clips where we have shown arrows. To use the instrument as a voltmeter, connect the voltage to be measured at "unknown E," and set the clips to obtain a null on the meter. The unknown voltage then corresponds to the digits beside the selected resistors.

Fig. 2 is a schematic of the instrument, except for the divider. The stable voltage source consists of field effect transistors (FETs) Q1 and Q2, and resistor R1. The FETs are connected in series, forming a very high impedance current source which develops the reference voltage across R1. This means of obtaining a stable potential has not been widely exploited and, indeed, it is little known even among FET manufacturers. The reference voltage, E_R, depends on FET Q2, ordinarily turning out to be somewhere between 1 volt and 3.5 volts. You don't have much control over this parameter unless you individually select the 2N3819. But E_R is remarkably stable with changes in battery voltage and can be made almost completely independent of temperature by the selection of R1, as described later.

To get 10 volts for the divider, E_R is amplified by op amp IC1, whose gain is set by the selection of feedback resistor R3 and the adjustment of CAL trimmer R4. The S5556/MC1456 op amp was chosen for its low bias current (about 30 nanoamperes), its excellent temperature stability, and its reasonable price. To further enhance temperature stability, emitter-follower Q3 obviates any loading on IC1 and thereby keeps the op amp cool. Capacitor C1 suppresses any tendency to oscillate.

The divider uses three two-pole, 10-position selector switches to perform the function of the alligator clips suggested for Fig. 1, selecting 1000 different output voltages (0-9.99 volts).

Referring again to Fig. 2, setting switch S2 to SEL applies the selected voltage to the output circuit. The 1001th voltage, 10 volts, is obtained in the 10 V position. The potential selected by S2 is applied to output jack J1 through microammeter M1. The time constant R5-C2 and germanium diodes CR1 and CR2 protect the meter movement from slamming when J1 is connected to a voltage much different from the one selected. Resistor R6, in turn, protects the diodes from burnout when the selected voltage happens to be 0 volts. In this case the divider output is at common and, without R6, any voltage on J1 would be applied directly across one of the diodes.

Output resistance of the divider is about 1000 Ohms. The output resistance of the unit is, therefore, this value in series with R5, R6, and the microammeter, for a grand total of 2000 to 5000 Ohms, depending on the meter resistance. Therefore, the instrument cannot be loaded without loss of accuracy. Even a 1-megohm load could drop the output voltage as much as 0.5%. We will deal with this problem under "Operation." On the other hand, if you can tolerate a higher output resistance, you would be well advised to make all the resistors in the divider much larger in value. They should all be increased by the same factor, say by 10 or even 100 times. This would make the current in the first divider ring proportionally lower,

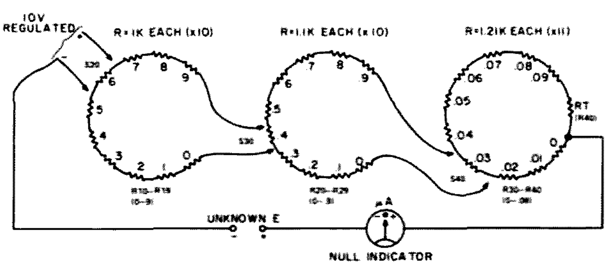

Fig. 1. Simplified schematic of voltage standard. In the "circular" voltage divider, the resistors in each ring are 1.1 times the value of the ones in the preceding ring. A microammeter, used as a null indicator, provides a means for directly measuring dc voltage.

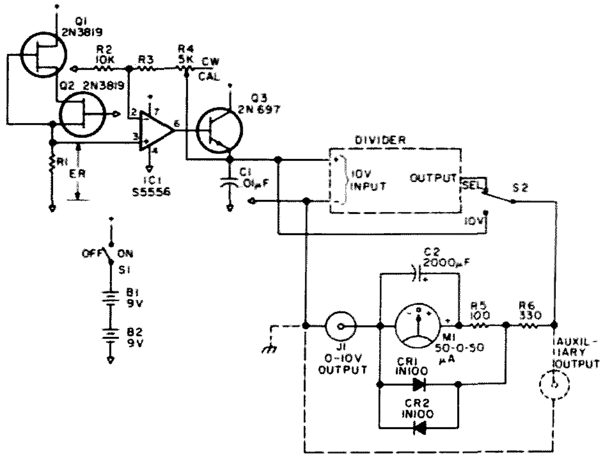

Fig. 2. Schematic of precision voltage source and output circuit of instrument. Inexpensive 2N3819 FETs provide an extremely stable reference voltage, amplified to 10 V by IC1 and Q3. Output voltage is applied to J1. Microammeter null indicator is protected from slamming by RC circuit and diodes.

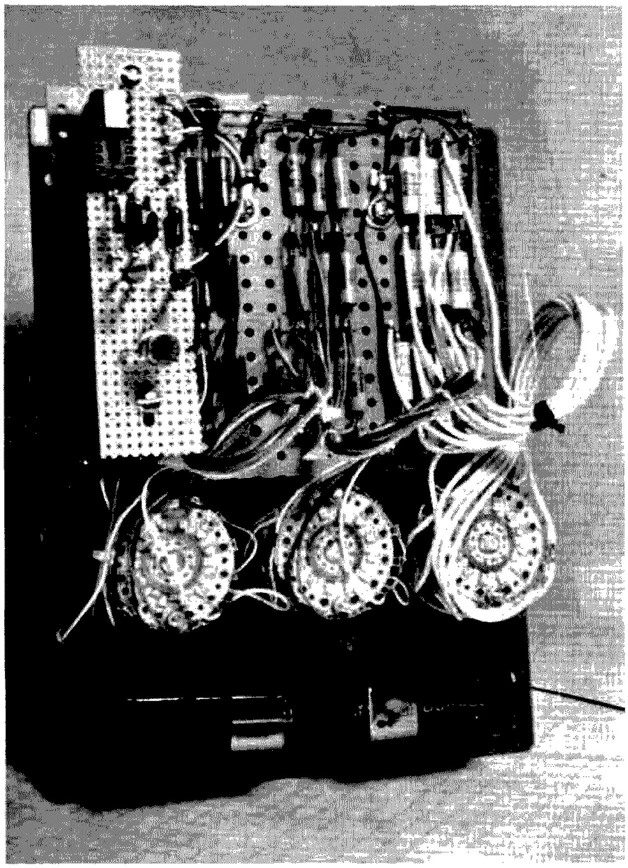

Interior view of instrument. All parts are mounted on back of the front panel. The divider resistors are located on a perfboard mounted on the meter terminals. The precision voltage source subassembly is built on another perfboard mounted to the first.

alleviating problems of stray voltage drops and greatly increasing battery life. However, it would also reduce meter deflection, so you might have to employ a more sensitive movement.

If you wish to bypass the various resistances of the output circuit, you can add the auxiliary output jack shown in dashed lines. This addition also provides access, when S2 is in the 10 V position, directly to the 10-volt source, whose resistance is practically zero and which can, therefore, be loaded heavily with virtually no loss of voltage.

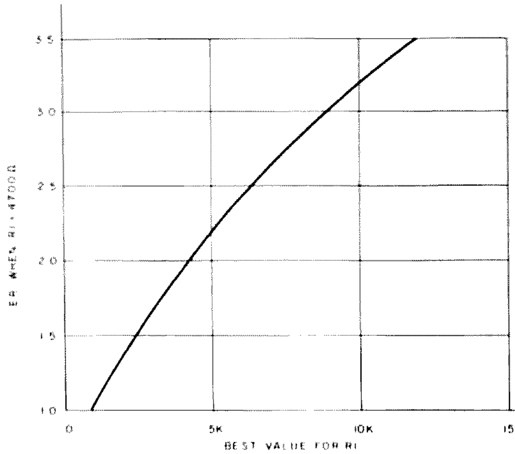

Fig. 3. Graph of R1 vs. E_R when R1 is 4700 Ohms approximates optimum value for new R1. Exact value for best temperature stability can be determined by heat test. (See text, "Adjustment.")

Choice of Parts

Temperature stability depends on your choice of R1-R4. For best results, precision resistors should be used for R1-R3, not because these resistances are critical, but because precision types are less affected by time and temperature than composition. Film or wirewound units are a good choice. However, the values of R1 and R3 will be selected as described under "Adjustment," the former for best temperature independence and the latter to set the output voltage. For this selection process, you can use ordinary composition resistors, and later replace them with the precision variety. For best stability and ease of adjustment, R4 should be a multi-turn trimmer, either wirewound or cermet. A shaft lock is desirable. Precision resistors must be used in the divider and, as we have indicated earlier, a closer tolerance than we have specified will provide more accurate output voltages. Any general purpose, silicon NPN transistor may be substituted for the 2N697 specified at Q3.

If you have a mathematical bent and wish to interpolate the meter reading to estimate potentials falling between the positions of "hundredths" switch S30, you may wish to use a more sensitive meter (say, 10-0-10 microamperes). In this case, CR1 and CR2 will introduce a troublesome nonlinearity, so you may wish to use silicon diodes or back-to-back zeners for a higher threshold voltage. If you want the meter to respond faster, you can use a smaller value for C2. Either change, though, will cause the meter to slam harder.

Any hookup wire used in the divider section of the instrument must be no smaller than No. 22. Smaller wire would develop voltage drops that degrade accuracy. If you have decided to add a fourth or fifth stage to the divider, you should carefully consider the effect of contact resistance in the voltage selector switches. It might be necessary to procure special switches made for this sort of application.

Construction

The voltage standard can be built in any convenient enclosure. As shown in the photos, all parts in the author's prototype, including the batteries, were mounted on the backside of the front panel of an instrument housing. The divider resistors are located on a perfboard mounted to the meter terminals. You can, instead, mount the resistors directly on the switch terminals, but this will much complicate matters if you have to correct wiring errors or later decide to change the divider resistors for ones having different values or tolerances. The precision voltage source is constructed on a smaller perfboard mounted to the first by spacers.

Do not use the chassis as the common conductor. Instead, use wire leads between components. The common conductor may then be connected to the chassis, but at one point only. If the connector you plan to use at J1 is somewhat difficult to insulate, as many jacks are, you may make the chassis connection at this point, as shown by the dashed symbol in

Fig. 2. This connection, however, creates an obscure but potent hazard. Due to manufacturing defects, an occasional 9-volt battery has an internal short circuit between one terminal and the case. If the battery case is touching the chassis and the common conductor is also connected to the chassis, the battery will be shorted and may explode! Therefore, as in any equipment using 9-volt batteries where the case is grounded, it is smart to insulate the battery holders from the case. Solder carefully. Rosin joints introduce stray voltage drops.

As we mentioned earlier, the values of resistors R1 and R3 will be individually selected. For now, however, temporarily install 4700 Ohms at R1 and 18,000 Ohms at R3.

Adjustment

The adjustment procedure has two main parts. First, R1 must be selected for best temperature stability, and then R3 must be selected to yield 10 volts from the dc amplifier. To select R1, proceed as follows:

1. Set S1 to ON.
2. Measure voltage E_R across 4700-Ohm resistor R1.
3. Find the best value for the new R1 from Fig. 3, and replace R1 with this value.
4. If you are using a DVM of at least 4½ digits, you can now verify temperature stability by touching the tip of a hot soldering iron to Q2 for about 3 seconds. Reference voltage E_R should not vary more than a few millivolts. If it does, correct the value of R1 as needed.

To select R3, you need only a reasonably accurate voltmeter such as a typical VOM. Then, to trim R4 to exactly 10 volts, you will need either an accurate DVM (preferably 4½ digits or more), or a precision voltage source such as a standard battery, having a known terminal potential up to 10 volts. If you don't need perfect calibration, however, instead of a standard battery you can use a brand new Mallory Duracell Type MN-1604, which has an open-circuit potential close to 9.32 volts. Do not use as a standard either of the batteries powering the instrument because its load drops the voltage too much. To select R3, proceed as follows:

1. Set CAL trimmer R4 to its mid-position.
2. Set S2 to 10 V.
3. Connect the voltmeter between common and the arm of S2, or to the auxiliary output jack if you have one.
4. Select R3 to get a reading as close to 10 volts as possible.
5. If using a DVM, adjust R4 to get 10.000 volts. This step ends your adjustment procedure. Otherwise, proceed to step 6.
6. Set S2 to SEL.
7. Set the selector switches to correspond to the voltage of the standard battery.
8. Connect the standard battery to J1, plus to the meter side, minus to common.
9. Adjust R4 to zero the meter.

Operation

The voltage standard has two main uses, as a 0-10-volt dc voltmeter or as a precision voltage source. To use the instrument as a dc voltmeter, proceed as follows:

1. Set S1 to ON.
2. Set S2 to SEL.
3. Set voltage selector switches S10, S20, and S30 to approximate the voltage you wish to measure. If you can't estimate this unknown voltage, set the switches to 5.55 volts.
4. Connect the unknown voltage to J1, plus to the meter side and minus to common.
5. Set voltage selector switches S10, S20, and S30 to zero the meter as nearly as possible. The switch settings now correspond to the unknown potential. (If the unknown turns out to be exactly 10 volts, the meter will of course zero with S2 set at 10 V.) If the meter needle is not exactly at zero, then the unknown is a few millivolts different from the setting of "Hundredths" switch S30. You might try interpolating to estimate the difference, but if you have used 0.1% resistors in the divider,

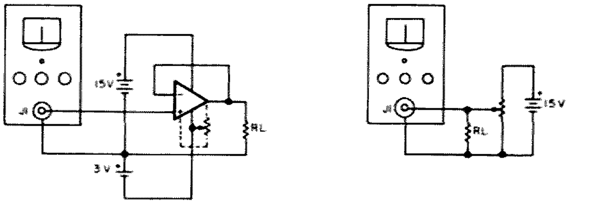

Fig. 4. Two methods to avert the effect of loading on output voltage.

Parts List
(for divider of Fig. 1)

R10-R19	1,000-Ohm, 0.1%, ¼-Watt precision resistor
R20-R29	1100-Ohm, 0.1%, ¼-Watt precision resistor
R30-R40	1210-Ohm, 0.1%, ¼-Watt precision resistor
S10, S20, & S30	2-pole, 10-position rotary switch

Note: 0.1% resistors described above are available at $1 each from Cal-State Electronics, 5222 Venice Bl., Los Angeles CA 90019. Add $1.50 for shipping (UPS). California residents please add 6% sales tax.

Parts List
(for electronics of Fig. 2)

B1, B2	9-volt battery
C1	0.01 uF capacitor
C2	2000 uF, 3-volt electrolytic capacitor
CR1, CR2	1N100 germanium diode
IC1	S5556/MC1456 op amp (preferably by Signetics)
J1	phono receptacle or other suitable 2-conductor jack
M1	50-0-50 dc microammeter
Q1, Q2	2N3819 field effect transistor (Texas Instruments)
Q3	2N697 transistor
R1	1%, ¼-Watt precision resistor; value selected. See text, "Choice of parts." Temporarily use 4700-Ohm composition-type.
R2	10,000 Ohm, 1%, ¼-Watt precision resistor
R3	1%, ¼-Watt precision resistor, value selected. See text, "Choice of parts." Temporarily use 18,000-Ohm composition-type.
R4	5k panel-mounting trimmer potentiometer
R5	100-Ohm, 10%, ¼-Watt resistor
R6	330-Ohm, 10%, ¼-Watt resistor
S1	SPST toggle switch
S2	SPDT toggle switch
Misc.	22-gauge hookup wire for divider, perfboard, push-in terminals, IC socket, battery clips, battery holders, cabinet, etc. To select R1 and R3, a supply of 5% composition resistors, or a resistor-substitution ("decade") box in the range of 1000 Ohms to 100,000 Ohms is required. See separate parts list for divider.

remember that your reading will only be accurate within 0.1 percent of the indicated voltage anyhow.

As a voltage source, a typical use of the instrument is in the calibration of a voltmeter. It is especially valuable, for example, to check the linearity of a DVM. However, the voltage source application may involve loading complications. The input resistance of a typical DVM is 100 or 1000 megohms, so it should give you no such problem. Given a load of lower resistance, though, say a 20,000-Ohms-per-volt VOM, you must either mathematically allow for the load or avert its effect entirely. In the former course, you are on your own, but with the latter, we can offer a couple of methods: As shown in Fig. 4, you can either decouple the voltage standard output through an op amp voltage follower, or create a bridge with the use of a pot.

In the method of Fig. 4(a), an op amp is connected as a voltage follower to relieve the load on the voltage standard output. For best accuracy, you should choose an op amp that has provisions for nulling its offset and which is rated for low offset-current.

The method of Fig. 4(b) is simpler and cheaper though not as convenient. In this method, the voltage standard is one leg of a bridge, the other being provided by a potentiometer that matches the voltage set by the standard. With this scheme, once having set the voltage selector switches to the potential you want, simply adjust the pot to zero the meter. For smoothest adjustment, the resistance value of the pot should be one half to one tenth R_L. ■

New Products

from page 158

able K-2 frequency-determining elements, available in all EIA tone frequencies from 268.5 Hz to 2109.0 Hz.

Power requirements are 6 to 16 V dc unregulated at 10 mA. Reverse polarity and overvoltage protection are built-in. All connections to the board are made with push-on connectors, and color-coded wires are furnished.

The SD-1 may be driven by the discriminator, by the audio stages, or from the speaker circuit. Switched outputs include momentary high current closure to ground for horn relay, a latched high current closure for a call light, and a latched low current, high voltage pull-away from ground to unmute the receiver.

The unit is completely immune to rf and comes complete with universal mounting hardware. A full one year warranty applies when the unit is returned to the factory for repair.

For further information, contact: *Communications Specialists, 426 West Taft Avenue, Orange CA 92667; (714)-998-3021, (800)-854-0547.* Reader Service number C6.

YAESU'S FT-225RD 2M TRANSCEIVER

A new state-of-the-art 2 meter all-mode transceiver, the FT-225RD, has been added to Yaesu's quality line of amateur radio equipment.

The new transceiver covers the entire 4 MHz and provides for USB, LSB, CW, FM, and AM. Power output is variable, 1-25 Watts. Squelch, VOX, PTT, semi-break-in CW with sidetone, and tone burst are standard features of the FT-225RD. A superb noise blanker permits mobile SSB operation, and a discriminator center meter allows precise zeroing on FM signals. Repeater splits are the standard 600 kHz; however, any split up to 1 MHz is possible with optional crystals. Provision has been made for up to eleven (11) fixed channels using optional crystals.

The transceiver utilizes high quality plug-in circuit boards throughout, and an optional memory unit enables the storage and recall of any frequency within the range of the unit. This allows instant programmable QSY to a favorite repeater or calling frequency with just a flick of the switch. The digital frequency is accurate to 0.1 kHz (or to 1 kHz with the FT-225R, which offers the analog dial readout only at slightly less cost).

A built-in power supply provides taps for operation on 100/110/117/200/220 and 234 volts 50/60 Hz. Dc operation covers 11.5 to 16 volts, negative ground at 6.5 Amps on transmit, 1.2 Amps on receive. The transceiver measures 280 (W) x 125 (H) x 315 (D) mm and weighs only 9.0 kg.

An attractive four-color brochure is available at your nearby authorized Yaesu dealer or from *Yaesu Electronics Corporation, 15954 Downey Avenue, PO Box 498, Paramount CA 90723.* Reader Service number Y1.

ECONOMY HAND TOOL CRIMPS BELDEN 8281 CABLE

AMP Special Industries' Coax Economy Stamped Hand Tool line has been expanded to include Belden 8281 cable, a popular 75-Ohm video cable used by television studios, broadcasting systems, and test equipment. Designed to crimp UHF and BNC connectors on the Belden 8281 cable, this quality SUPER CHAMP™ hand tool is lightweight and economical. Its features include a guide on the tool body for strip dimensions in all coax series—standard, economy, single, or dual crimp. The handles are cushioned for greater comfort.

For more information, contact: *AMP Special Industries, Valley Forge PA 19482.* Reader Service number A70. SUPER

Continued on page 253

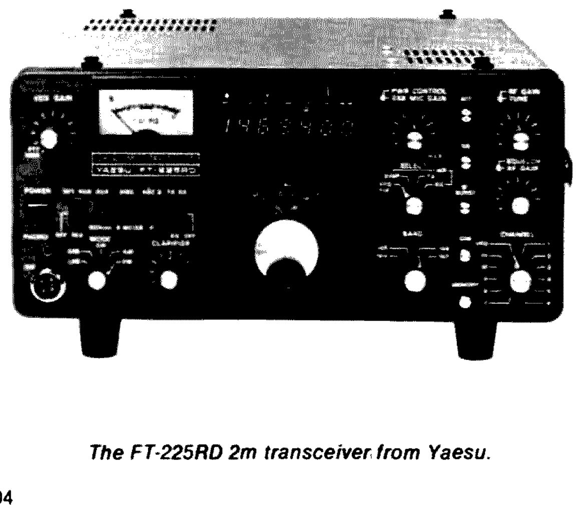

The FT-225RD 2m transceiver from Yaesu.

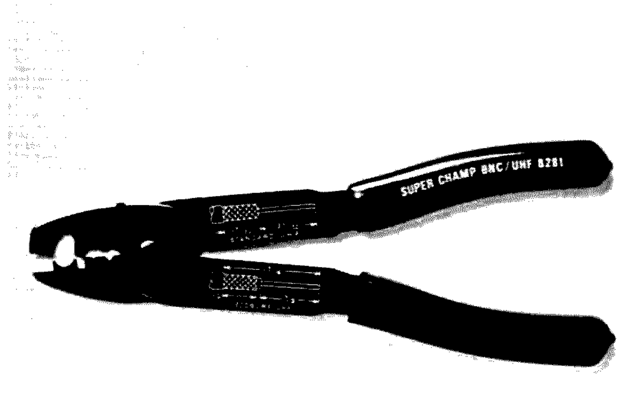

AMP Special Industries' new SUPER CHAMP hand tool.

The 22S Goes Digital

—add 7-segment displays

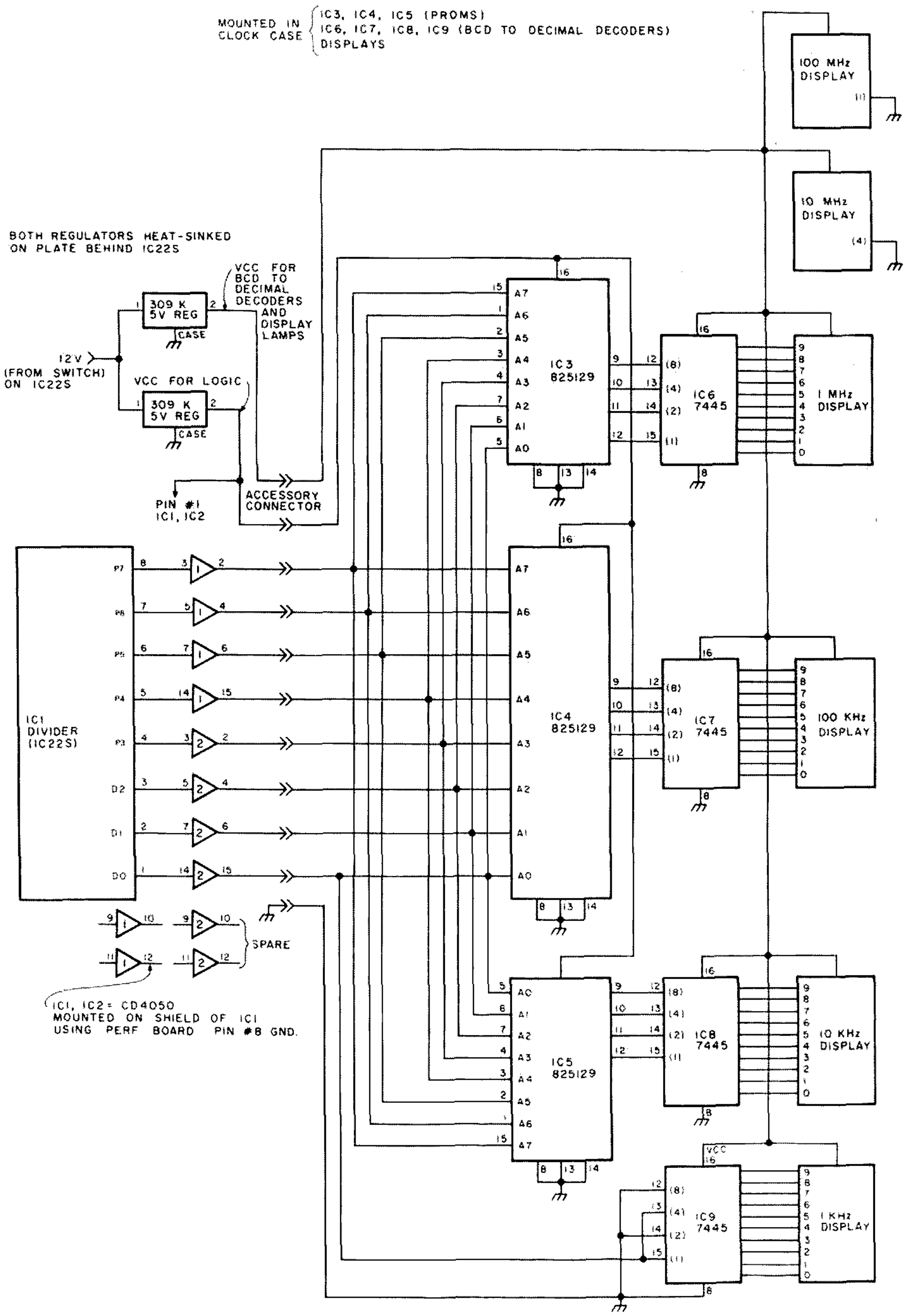

Fig. 1. IC-22S frequency display schematic diagram.

Raymond E. Thompson KH6IEL
2040 Komo Mai Drive
Pearl City HI 96782

Although very popular since its introduction by Icom, one big problem with the IC-22S is that it is so darn hard *not* to add modifications. Funny, but with a crystal-controlled 2 meter transceiver, the thought of adding additional channels seldom enters your mind. Six, fifteen, or twenty-four channels or whatever was originally supplied seems adequate. When you own an IC-22S, you can program any frequency you like with diodes. Frequency selection with only one knob is a great feature which really adds a lot to operating convenience. That's where the problem comes in. The 23 channels that you can select don't seem to be enough. Something keeps you trying to think of different methods of getting more channels. Several easy ones come to mind right away: adding an eight-level DIP switch, using toggle switches to add 15, 30, or 45 kHz to the programmed frequency, or adding a second matrix board and using the previous high/low power switch as a selector. All of these have one common drawback: You have to memorize switch settings or use charts, tables, etc., to know what frequency you are operating on. Even the mode switch can cause

problems if you forget that some of your programmed channels are simplex rather than repeaters. What is needed is a direct frequency readout.

That is the subject of this article. A direct frequency display for the IC-22S. It works on receive or transmit and converts whatever binary code you have at the divider input in the IC-22S to a direct-reading frequency.

Programming the diode matrix board for a particular frequency has been covered in several articles and in the operating manual, so I won't go into any of that. The circuit for the frequency readout can be broken down into two functions. First, we must convert the eight-level binary code in the IC-22S

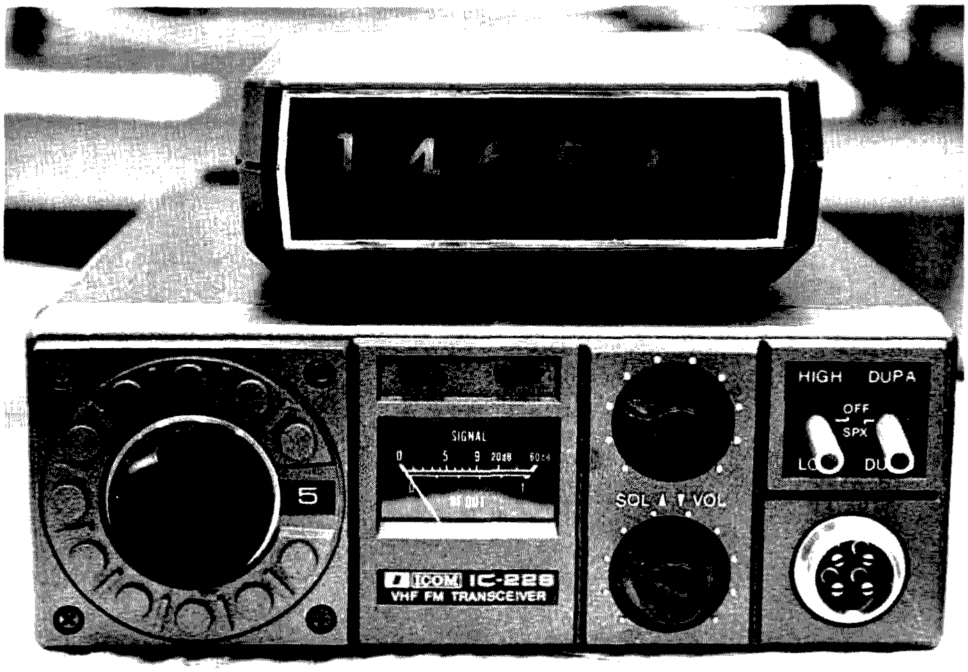

The clock case used to enclose the display fits very nicely on top of the IC-22S. No question as to what frequency channel 5 is on this IC-22S.

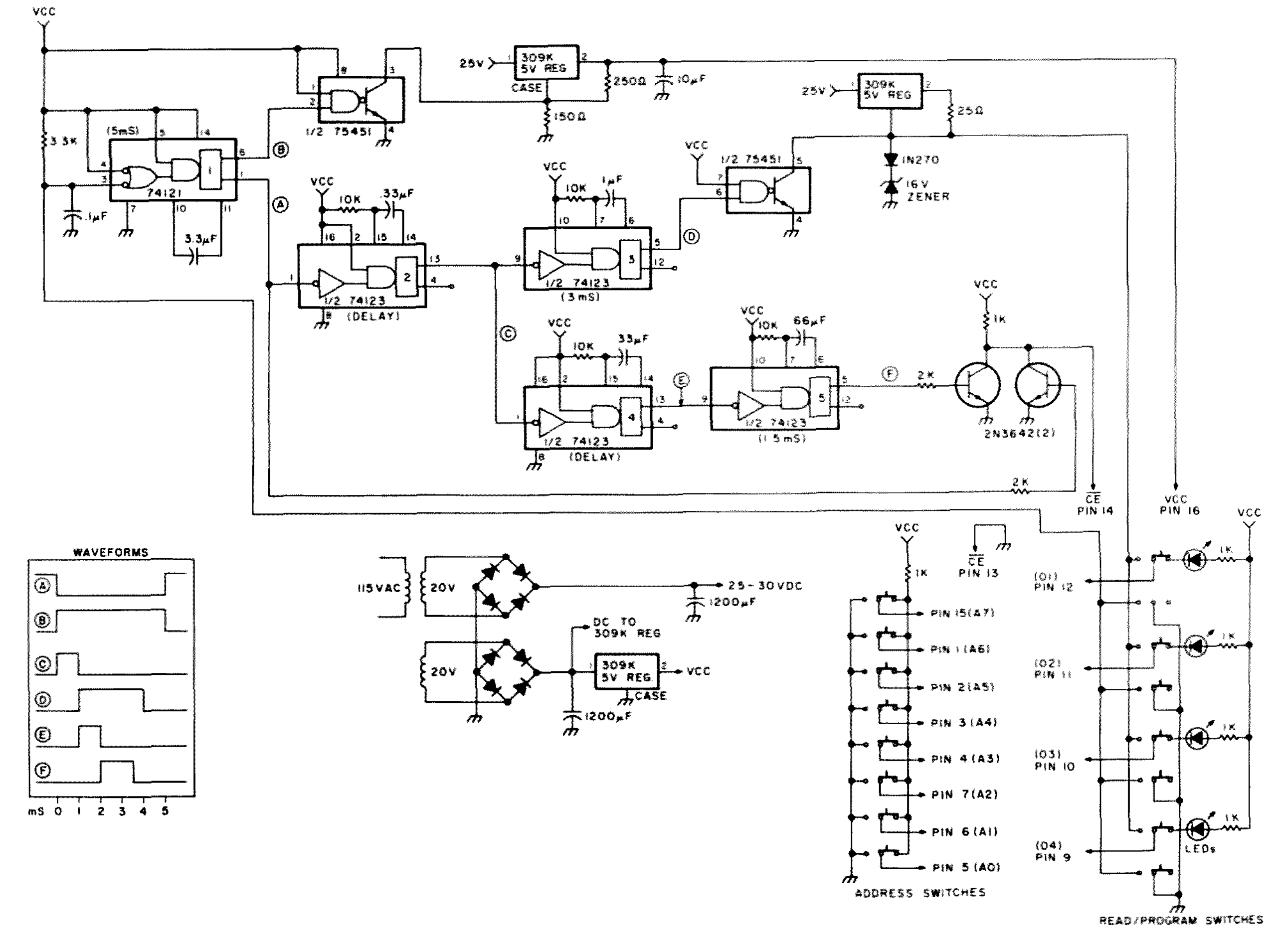

Fig. 2. Manual programmer from Signetics for 82S129 PROM.

divider into the appropriate BCD code for frequency. Second, we have to convert the BCD code to a visual display of frequency. "Why two steps and not just one?" you might be asking. It's simpler using two steps. We have eight inputs to convert to twenty-two outputs. Two for the MHz (6 and 7) and ten for both the 100 kHz and 10 kHz positions (1-10). If we use seven-segment LEDs, this cuts our requirements down to fifteen. Eight inputs must be converted to fifteen outputs. No such device is available.

Instead of looking at all three displays together, and by looking at each one separately, we come up with eight inputs and seven outputs for the 10 and 100 kHz digits. This is still a pretty expensive thing and beyond using simple gate logic. If we use a standard BCD-to-seven-segment decoder ahead of each display, we have cut our requirements to eight inputs with four outputs. Now we are getting somewhere! Any 256 x 4-bit converter would work, one for each display digit. That's it. Tie three 256 x 4-bit PROMs, with their inputs in parallel, to standard decoders to drive the display digits!

Looking at the schematic diagram (Fig. 1), IC1 and IC2 are simply hex buffer converters. They get the CMOS binary divider outputs down to TTL where we can use them. Since only eight are needed, there are four unused buffers which could be used for some other purpose. I used the 82S129 PROM for two reasons. A 256 x 4-bit device was required and the 82S129 PROM cost was only $2.50 from S.D. Sales. The PROM for the MHz position (IC3) has to be programmed to produce a 5, 6, 7, or 8 with the appropriate binary input. Likewise, IC4 must be programmed to output the proper BCD code in the 100 kHz position of the frequency readout. IC5 is for the 10 kHz numbers.

Let's look at 146.520 MHz to see how this works out. 146.520 has the binary address of 142. This is found in the owner's manual or can be calculated by several means. So, we need the binary address code of 142 to be changed to a BCD code representing 146520. The hundreds and tens of MHz (1 and 4) will never change, so they can be either hardwired in the display or forgotten about. IC3 (MHz) is programmed

Program chart. 145.350—148.035

	Address								IC3	IC4	IC5
	128	64	32	16	8	4	2	1	8 4 2 1	8 4 2 1	8 4 2 1
064	0	1	0	0	0	0	0	0	0101	0011	0101
065	0	1	0	0	0	0	0	1	0101	0011	0110
066	0	1	0	0	0	0	1	0	0101	0011	1000
067	0	1	0	0	0	0	1	1	0101	0011	1001
068	0	1	0	0	0	1	0	0	0101	0100	0001
069	0	1	0	0	0	1	0	1	0101	0100	0010
070	0	1	0	0	0	1	1	0	0101	0100	0100
071	0	1	0	0	0	1	1	1	0101	0100	0101
072	0	1	0	0	1	0	0	0	0101	0100	0111
073	0	1	0	0	1	0	0	1	0101	0100	1000
074	0	1	0	0	1	0	1	0	0101	0101	0000
075	0	1	0	0	1	0	1	1	0101	0101	0001
076	0	1	0	0	1	1	0	0	0101	0101	0011
077	0	1	0	0	1	1	0	1	0101	0101	0100
078	0	1	0	0	1	1	1	0	0101	0101	0110
079	0	1	0	0	1	1	1	1	0101	0101	0111
080	0	1	0	1	0	0	0	0	0101	0101	1001
081	0	1	0	1	0	0	0	1	0101	0110	0000
082	0	1	0	1	0	0	1	0	0101	0110	0010
083	0	1	0	1	0	0	1	1	0101	0110	0011
084	0	1	0	1	0	1	0	0	0101	0110	0101
085	0	1	0	1	0	1	0	1	0101	0110	0110
086	0	1	0	1	0	1	1	0	0101	0110	1000
087	0	1	0	1	0	1	1	1	0101	0110	1001
088	0	1	0	1	1	0	0	0	0101	0111	0001
089	0	1	0	1	1	0	0	1	0101	0111	0010
090	0	1	0	1	1	0	1	0	0101	0111	0100
091	0	1	0	1	1	0	1	1	0101	0111	0101
092	0	1	0	1	1	1	0	0	0101	0111	0111
093	0	1	0	1	1	1	0	1	0101	0111	1000
094	0	1	0	1	1	1	1	0	0101	1000	0000
095	0	1	0	1	1	1	1	1	0101	1000	0000
096	0	1	1	0	0	0	0	0	0101	1000	0011
097	0	1	1	0	0	0	0	1	0101	1000	0100
098	0	1	1	0	0	0	1	0	0101	1000	0110
099	0	1	1	0	0	0	1	1	0101	1000	0111
100	0	1	1	0	0	1	0	0	0101	1000	1001
101	0	1	1	0	0	1	0	1	0101	1001	0000
102	0	1	1	0	0	1	1	0	0101	1001	0010
103	0	1	1	0	0	1	1	1	0101	1001	0011
104	0	1	1	0	1	0	0	0	0101	1001	0101
105	0	1	1	0	1	0	0	1	0101	1001	0110
106	0	1	1	0	1	0	1	0	0101	1001	1000
107	0	1	1	0	1	0	1	1	0101	1001	1001
108	0	1	1	0	1	1	0	0	0110	0000	0001
109	0	1	1	0	1	1	0	1	0110	0000	0010
110	0	1	1	0	1	1	1	0	0110	0000	0100
111	0	1	1	0	1	1	1	1	0110	0000	0101
112	0	1	1	1	0	0	0	0	0110	0000	0111
113	0	1	1	1	0	0	0	1	0110	0000	1000
114	0	1	1	1	0	0	1	0	0110	0001	0000
115	0	1	1	1	0	0	1	1	0110	0001	0001
116	0	1	1	1	0	1	0	0	0110	0001	0011
117	0	1	1	1	0	1	0	1	0110	0001	0100
118	0	1	1	1	0	1	1	0	0110	0001	0110
119	0	1	1	1	0	1	1	1	0110	0001	0111
120	0	1	1	1	1	0	0	0	0110	0001	1001
121	0	1	1	1	1	0	0	1	0110	0010	0000
122	0	1	1	1	1	0	1	0	0110	0010	0010
123	0	1	1	1	1	0	1	1	0110	0010	0011
124	0	1	1	1	1	1	0	0	0110	0010	0101
125	0	1	1	1	1	1	0	1	0110	0010	0110
126	0	1	1	1	1	1	1	0	0110	0010	1000
127	0	1	1	1	1	1	1	1	0110	0010	1001
128	1	0	0	0	0	0	0	0	0110	0011	0001
129	1	0	0	0	0	0	0	1	0110	0011	0010
130	1	0	0	0	0	0	1	0	0110	0011	0100
131	1	0	0	0	0	0	1	1	0110	0011	0101
132	1	0	0	0	0	1	0	0	0110	0011	0111
133	1	0	0	0	0	1	0	1	0110	0011	1000
134	1	0	0	0	0	1	1	0	0110	0100	0000
135	1	0	0	0	0	1	1	1	0110	0100	0001
136	1	0	0	0	1	0	0	0	0110	0100	0011
137	1	0	0	0	1	0	0	1	0110	0100	0100
138	1	0	0	0	1	0	1	0	0110	0100	0110
139	1	0	0	0	1	0	1	1	0110	0100	0111
140	1	0	0	0	1	1	0	0	0110	0100	1001
141	1	0	0	0	1	1	0	1	0110	0101	0000
142	1	0	0	0	1	1	1	0	0110	0101	0010
143	1	0	0	0	1	1	1	1	0110	0101	0011
144	1	0	0	1	0	0	0	0	0110	0101	0101
145	1	0	0	1	0	0	0	1	0110	0101	0110
146	1	0	0	1	0	0	1	0	0110	0101	1000
147	1	0	0	1	0	0	1	1	0110	0101	1001
148	1	0	0	1	0	1	0	0	0110	0110	0001
149	1	0	0	1	0	1	0	1	0110	0110	0011
150	1	0	0	1	0	1	1	0	0110	0110	0100
151	1	0	0	1	0	1	1	1	0110	0110	0101

for a BCD 6 (0110). IC4 (kHz) at address 142 is programmed for an output BCD 5 (0101). Likewise IC5 (10 kHz) at address 142 is programmed to a BCD 2 (0010). The kHz position does not require a PROM for conversion because anytime D0 is low, we want a 0, and when it's high, we want a 5. In this case, the binary number is 142 (10001110), so we read a 0. D0 is the last digit of the binary or the least significant. For address 142, we'll have IC3 = 6, IC4 = 5, IC5 = 2, and D0 = 0. As another example, take a look at 146.010 MHz. The binary address for this frequency is 108 or 01101100. Here we'll want IC3 = 0110, IC4 = 0000, IC5 = 0001, and D0 = 0.

The second function is changing the BCD outputs to a display reading. I just happened to have a six-digit display that I had been wanting to use, so I used 7445 BCD-to-decimal decoders. LEDs and appropriate decoders would work nicely and would probably be the logical choice if you didn't already have some other type of readout display.

Programming the PROMs was my first experience with PROMs. Until this time, I just didn't have a need to get into this. I was a little leery about attempting it, but I soon found out that it wasn't that hard. I did follow the manufacturer's circuit recommendations and the PROMs were programmed without difficulty. I built the required programmer circuit into my Heathkit® IC Tester, since the IC socket and all the switches were already there. I had to modify my IC Tester in order to do this; however, I won't go into any details of the modification. I will just include the circuit recommendations from the chip manufacturer. I will have to agree with others that patience and care are the main things you must have when you are manually programming a PROM. The manufacturer also included waveforms to be used with automatic programming.

The programmer circuit (Fig. 2) appears at first to be a little involved, but is really pretty straightforward. The complete cycle takes 5 milliseconds and is controlled by one-shot 1. Its resting state causes the case of the 5-volt regulator to be grounded through ½ of the 75451, which puts Vcc for the PROM at 5 volts. With the address switches set to the desired

152	1 0 0 1 1 0 0 0	0110	0110	0111
153	1 0 0 1 1 0 0 1	0110	0110	1000
154	1 0 0 1 1 0 1 0	0110	0111	0000
155	1 0 0 1 1 0 1 1	0110	0111	0001
156	1 0 0 1 1 1 0 0	0110	0111	0011
157	1 0 0 1 1 1 0 1	0110	0111	0100
158	1 0 0 1 1 1 1 0	0110	0111	0110
159	1 0 0 1 1 1 1 1	0110	0111	0111
160	1 0 1 0 0 0 0 0	0110	0111	1001
161	1 0 1 0 0 0 0 1	0110	1000	0000
162	1 0 1 0 0 0 1 0	0110	1000	0010
163	1 0 1 0 0 0 1 1	0110	1000	0011
164	1 0 1 0 0 1 0 0	0110	1000	0101
165	1 0 1 0 0 1 0 1	0110	1000	0110
166	1 0 1 0 0 1 1 0	0110	1000	1000
167	1 0 1 0 0 1 1 1	0110	1000	1001
168	1 0 1 0 1 0 0 0	0110	0110	0001
169	1 0 1 0 1 0 0 1	0110	1001	0010
170	1 0 1 0 1 0 1 0	0110	1001	0100
171	1 0 1 0 1 0 1 1	0110	1001	0101
172	1 0 1 0 1 1 0 0	0110	1001	0111
173	1 0 1 0 1 1 0 1	0110	1001	1000
174	1 0 1 0 1 1 1 0	0111	0000	0000
175	1 0 1 0 1 1 1 1	0111	0110	0001
176	1 0 1 1 0 0 0 0	0111	0110	0011
177	1 0 1 1 0 0 0 1	0111	0110	0100
178	1 0 1 1 0 0 1 0	0111	0111	0110
179	1 0 1 1 0 0 1 1	0111	0111	0111
180	1 0 1 1 0 1 0 0	0111	0111	1001
181	1 0 1 1 0 1 0 1	0111	0111	0000
182	1 0 1 1 0 1 1 0	0111	0111	0010
183	1 0 1 1 0 1 1 1	0111	0111	0011
184	1 0 1 1 1 0 0 0	0111	1000	0101
185	1 0 1 1 1 0 0 1	0111	0001	0110
186	1 0 1 1 1 0 1 0	0111	0001	1000
187	1 0 1 1 1 0 1 1	0111	0001	1001
188	1 0 1 1 1 1 0 0	0111	0010	0001
189	1 0 1 1 1 1 1 1	0111	0010	0010
190	1 0 1 1 1 1 1 0	0111	0010	0100
191	1 0 1 1 1 1 1 1	0111	0010	0101
192	1 1 0 0 0 0 0 0	0111	0010	0111
193	1 1 0 0 0 0 0 1	0111	0010	1000
194	1 1 0 0 0 0 1 0	0111	0011	0000
195	1 1 0 0 0 0 1 1	0111	0011	0001
196	1 1 0 0 0 1 0 0	0111	0011	0011
197	1 1 0 0 0 1 0 1	0111	0011	0100
198	1 1 0 0 0 1 1 0	0111	0011	0110
199	1 1 0 0 0 1 1 1	0111	0011	0111
200	1 1 0 0 1 0 0 0	0111	0011	1001
201	1 1 0 0 1 0 0 1	0111	0100	0000
202	1 1 0 0 1 0 1 0	0111	0100	0010
203	1 1 0 0 1 0 1 1	0111	0100	0011
204	1 1 0 0 1 1 0 0	0111	0101	0101
205	1 1 0 0 1 1 0 1	0111	0100	0110
206	1 1 0 0 1 1 1 0	0111	0100	1000
207	1 1 0 0 1 1 1 1	0111	0100	1001
208	1 1 0 1 0 0 0 0	0111	0101	0001
209	1 1 0 1 0 0 0 1	0111	0101	0010
210	1 1 0 1 0 0 1 0	0111	0101	0100
211	1 1 0 1 0 0 1 1	0111	0101	0101
212	1 1 0 1 0 1 0 0	0111	0101	0111
213	1 1 0 1 0 1 0 1	0111	0101	1000
214	1 1 0 1 0 1 1 0	0111	0110	0000
215	1 1 0 1 0 1 1 1	0111	0110	0001
216	1 1 0 1 1 0 0 0	0111	0110	0011
217	1 1 0 1 1 0 0 1	0111	0110	0100
218	1 1 0 1 1 0 1 0	0111	0110	0110
219	1 1 0 1 1 0 1 1	0111	0110	0111
220	1 1 0 1 1 1 0 0	0111	0110	1001
221	1 1 0 1 1 1 0 1	0111	0111	0000
222	1 1 0 1 1 1 1 0	0111	0111	0010
223	1 1 0 1 1 1 1 1	0111	0111	0011
224	1 1 1 0 0 0 0 0	0111	0111	0101
225	1 1 1 0 0 0 0 1	0111	0111	0110
226	1 1 1 0 0 0 1 0	0111	0111	1000
227	1 1 1 0 0 0 1 1	0111	0111	1001
228	1 1 1 0 0 1 0 0	0111	1000	0001
229	1 1 1 0 0 1 0 1	0111	1000	0010
230	1 1 1 0 0 1 1 0	0111	1000	0100
231	1 1 1 0 0 1 1 1	0111	1000	0101
232	1 1 1 0 1 0 0 0	0111	1000	0111
233	1 1 1 0 1 0 0 1	0111	1000	1000
234	1 1 1 0 1 0 1 0	0111	1001	0000
235	1 1 1 0 1 0 1 1	0111	1001	0001
236	1 1 1 0 1 1 0 0	0111	1001	0011
237	1 1 1 0 1 1 0 1	0111	1001	0100
238	1 1 1 0 1 1 1 0	0111	1001	0110
239	1 1 1 0 1 1 1 1	0111	1001	0111
240	1 1 1 1 0 0 0 0	0111	1001	1001
241	1 1 1 1 0 0 0 1	1000	0000	0000
242	1 1 1 1 0 0 1 0	1000	0000	0010
243	1 1 1 1 0 0 1 1	1000	0000	0011

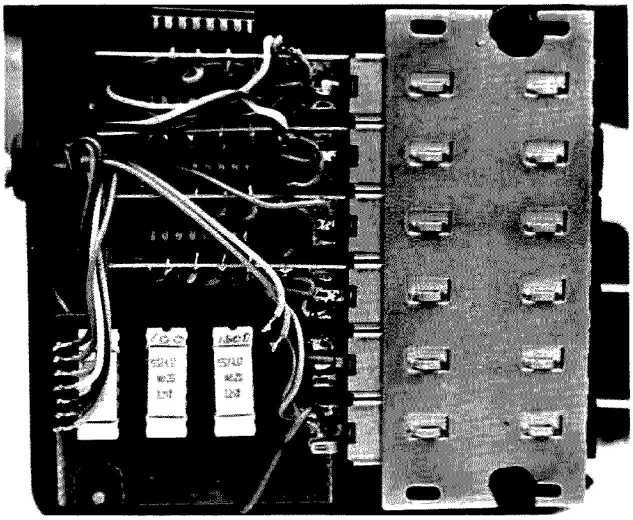

The three PROMs in the lower left leave plenty of room for the four decoders and display lamps. This clock case would be almost empty if LEDs had been used.

address, flipping any one of the output switches starts the 5 ms cycle. The case of the regulator is ungrounded, which raises Vcc up to 8.75 volts and starts one-shot 2 for a 2 ms delay. Following the delay, one-shot 3 is turned on for 3 ms. This removes the ground from the regulator and selected output pin, which lets this go to 17 volts. It also starts delay one-shot 4 which operates one-shot 5 after 1 ms delay. One-shot 5 raises the chip enable pin for 1.5 ms. The waveforms are indicated on the diagram. The output switch is returned to the read position and another output to be programmed to a one at this address will run the cycle again.

I started my programming with IC3. To get started and check my procedures, I put in address 1 (00000001). With all output switches in the read position, the LEDs remained off, indicating a 0000 in the output. I toggled the switch for output 1 (pin 12). The circuit ran through its operation and was now reading a 1. Leaving the address switches at 00000001, I flipped each of the other output switches and, sure enough, they now read 1111. (With this circuit, just toggling the desired output switch from read to program and back again is all that is required to program a 1 into the output. Nothing could be easier.) I had just programmed a BCD 15 into address 1. This didn't matter because the first address that I was going to need was 108. So with 108 as the address (01101100), all I had to do was program a BCD number 6 (0110). I programmed these outputs (pins 11 and 10) to ones. When I switched to another address, my outputs went to 0000. Returning to 108, I had my BCD 6, big as life. I then went down through the remaining addresses, programming the appropriate BCD 6 or 7. In fact, I decided to program the appropriate BCD number all the way from 64 through 243, just because my IC-22S would operate in this range.

IC4 and IC5 were not as straightforward because they have a lot of changes in their outputs. To keep from getting confused, I made up a chart which gave me the outputs for each PROM. Numbering from 64 through 243, I put down the eight-bit binary address and then the appropriate BCD number for each PROM. Before changing to the next address, I checked the chart against my LEDs to make certain that I had the right BCD number programmed. Making the output a 1 is easy, but once you toggle the switch, *it's a 1*, and if you toggle the wrong switch at that address, you are in trouble.

One suggestion I have is to mark each PROM with some kind of identification after being programmed. They all look alike and are much easier to visually identify than to look up the output codes in your programmer to tell the difference, once they are programmed. I marked mine by the number of kHz.

I placed the PROMs, decoders, and displays all together in a small clock cabinet. This kept my interface cable down to 11 wires. I used perfboard and point-to-point wiring. IC1 and IC2 are mounted close to the divider and add circuit. I used ribbon cable from the converter outputs to the accessory jack. If power is connected through the two spare pins of the power cable, the original 9-pin socket is adequate. Removing the original 9-pin socket and replacing it with a 24-pin connector would be a lot better. Once you use all 9 pins for a frequency display, you will certainly need more pins to add channels, or a scanner, or an external meter, or something. I couldn't find a 24-pin connector locally, so I enlarged the opening and put in a 36-pin Waldom connector.

When soldering connections to the pins of the divider, use care. The inputs for the converters could be taken from the matrix board (D0 through D7) rather than the divider (D0 through P7) which would be easier to get to. If this is done, in order to make the frequency read correctly, two CD4008 full-adders would have to be placed ahead of the PROMs and operated with the DP line. I gained access to the divider inputs (D0 through P7) by removing the matrix board, removing the 3 mounting screws and one threaded stand-off, and turning the board up so I could get to the pins of the IC1 divider. The wires were soldered onto pins 1 through 8 of IC1 and run toward the rear of the transceiver. These wires run under the board out to the perfboard for IC1 and IC2. I put my outputs of the converters on one side of

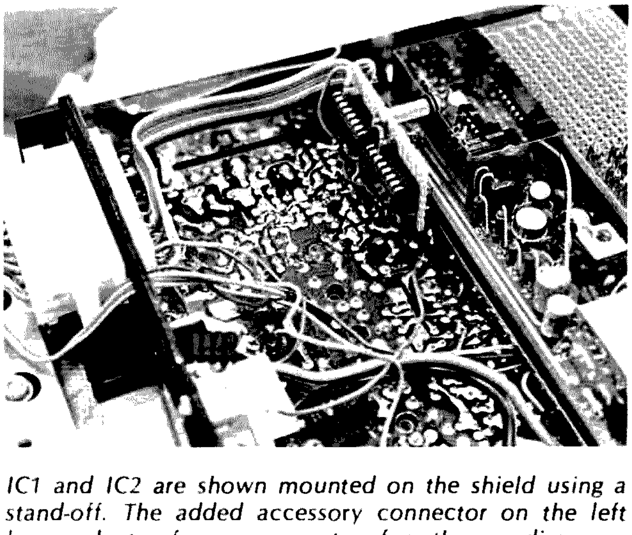

IC1 and IC2 are shown mounted on the shield using a stand-off. The added accessory connector on the left leaves plenty of spare connectors for other goodies.

the perfboard and the inputs on the other side, which helped in keeping the installation neat. My display lamps and drivers draw a little over 600 mA, so I used two separate 5-volt regulators. I mounted these on a metal plate with heat sinks. The plate is mounted to the back of the IC-22S with stand-offs. The logic doesn't draw much current so, depending on the display requirements, one regulator might do the job. The display can be mounted on top of the IC-22S or any easily readable position.

Since the binary code present at the divider is always present and converted to a frequency readout on the display, there are no adjustments or alignments. I checked each section for proper operation as they were put together. The display and drivers were checked by substituting a BCD number into each frequency position. The PROMs of course were checked during programming and the converters were checked to make certain that they faithfully followed the binary number in the divider. Once connected together, the job is completed.

At first, I tried to make use of all that room around the speaker. So I made a shield with a copperclad board over the main board and mounted the shield very close to the main board. This caused problems by changing the tuning of the output circuit. Moving the ICs up next to the divider and removing my shield board solved the problem. I mention this because, at first glance, it appears that mounting the hex buffers near the accessory socket is a good idea, but it isn't. I used flat ribbon cable and kept it up and away from the rf circuits.

Because of the numerous variations possible, I'm sure that each frequency display addition will be done a little differently. This article outlines one way that it can be done, so hopefully it will inspire you to put one together for your IC-22S. ■

Photos by Jan Kaneshiro

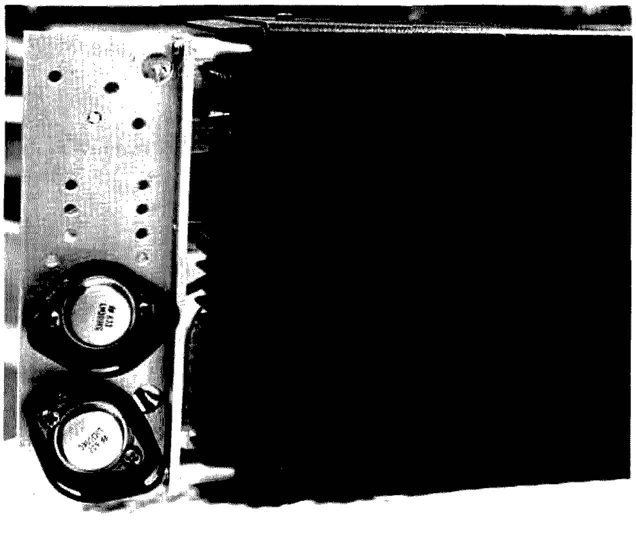

The two 5-volt regulators add a little length to the transceiver but operate cooly being mounted on this plate with stand-offs.

Lawrence I. Cotariu WA9MZS
Skokie IL 60076

WARC '79 Preview

—showdown in Geneva

The World Administrative Radio Conference (WARC) will reconvene in Geneva, Switzerland, on September 24, 1979. It is scheduled to last ten weeks at the International Telecommunication Union headquarters' complex.

The last WARC was held in Geneva during 1959. Delegates from over 100 countries attended to discuss and revise regulations that govern the international use of the radio spectrum. Regional conferences have been held since then to review matters such as the handling of third-party traffic.

To understand how amateur radio as a hobby fits into the global scheme of things, one should be aware of the purpose and workings of the ITU. Their negotiations will lead to a treaty that will have an enormous effect on how the communication services of the world will function.

History of the ITU

The ITU has existed for over 100 years and is the oldest of agencies that are affiliated with the United Nations. It first operated as a separate body until the UN absorbed it in an agreement signed in 1947. It was organized mainly to help regulate the use of the electric telegraph, which was made available to the public during the mid-1800s.

Various treaties were negotiated between the nations of Europe. The governments had to face difficulties that would have to be overcome. When Prussia, in 1848, decided to link its capital with places on the borders of its kingdom, it had to conclude at least 15 treaties with the German states to obtain the rights of passage needed for the building of telegraph lines.

The International Telegraph Convention was signed during the 1865 Paris Conference by 20 countries. These nations made up the International Telegraph Union, which was the original name of the ITU.

Then, in 1895, the first successful wireless transmissions signaled the greatest revolution in the history of telecommunications: the invention of radio. It was first regarded as a radically advanced form of telegraphy. Radio spread across the international scene more rapidly than the telegraph had.

With the rapid use of radio as a form of communication, it became clear that international regulations were needed to accommodate it. This became apparent in 1902 when Prince Henry of Prussia was returning across the Atlantic from a visit to the United States. He attempted to send a courtesy message to President Roosevelt. It was refused by the operator of a U.S. coastal station because the radio equipment on the ship was of a different type and nationality than that of the shore station. As a result of this incident, the German government called for, and convened, the 1903 Berlin Radio Conference.

In three years, another conference was held where the first international radio regulations incorporated the principle that ships and coastal radio stations must accept messages from each other.

The first World War greatly stimulated the development of radio, and in the early 1920s, the International Broadcasting Radio Service began. A new problem became how to share the radio frequencies to avoid the inevitable interference between stations. Even today, the global responsibility for radio frequencies remains one of the ITU's heaviest and most vital jobs.

It was not until the ITU conference of 1927 that a reference to the Amateur Radio Service was made: private experimental stations. The Washington, D.C., meeting allocated bands of frequencies to all of the various radio services, including maritime, broadcasting, and ham radio. Hams had been operating in the U.S. before this year but were now officially recognized by the world community.

During the second World War, broadcasting brought the fact home to everyone that radio waves respected no geographical boundaries. It was apparent that much wider world agreements would have to be drawn up for radio.

Radio Conference Procedure

The upcoming conference's purpose is to review the regulations currently in effect and to devote the proceedings to those needing revision. By the time the official delegations assemble in Switzerland, governments would have already firmed up their positions with the aid of private organizations and citizen groups. Their views will have

been submitted to the Secretariat of the ITU and published in a single book of proposals. Copies then would have been circulated to all member nations to enable each delegation to know what everybody else is thinking.

In the U.S., negotiation of the treaty is exclusively the responsibility of our State Department. Various working groups have been meeting for the past two years hashing out what they think should be the final U.S. proposal. The Federal Communications Commission considers these views, and adds to this their outlook. They then publish notices of proposals. Eventually, the FCC will come up with their final position paper and hand it to the State Department to begin the diplomatic process.

Much of the nitty-gritty negotiations are taking place now and the actual ITU WARC will seem anticlimactic.

Let's examine the makeup of the people who can attend these world meetings. Official voting delegates from the various nations have not yet been selected but soon will be. If the makeup of the last conference in 1959 can be any indication of what to expect, countries will include various governmental department heads who will administer radio law back home. In our case, the military brass would be included along with people from the FCC.

Representatives of private companies can participate along with people from international radio organizations. They can act as observers only after obtaining the approval of the participating governments. They can look on from the audience but cannot actively have a say in policymaking decisions.

On opening day, distinguished members will be seated in a large room of the ITU building to carry out the formal opening ceremonies. A chairman will be selected who will organize committees that will meet separately to take up the various issues that brought them there. Each nation will register members for participation in the discussion groups. They will be meeting near Geneva during the length of the assembly. Toward the end of the conference, members will once again assemble en masse to vote on the new international radio law.

In addition to committee meetings, there are plenty of social functions to attend. Much arm twisting is done in between the wine and the cheese dip. The diplomatic officials of the world do have a tradition of combining business with pleasure. Where else but in Geneva, which is the world headquarters of our many organizations (Red Cross, Boy Scouts, etc.) that serve humanity, should such splendid parties be thrown. These occasions are legal ground for the conference's observers to confer with the delegates on various matters.

When the treaty is concluded and the officials approve, then it is up to each member nation to ratify the agreement. In the U.S., our Senate has to approve the final document. Our services in the communications field do not have to abide by the new regulations until our government makes it law. One ratification process took our officials in Washington several years to give it their seal of approval. Until ratification, we continue to operate under the present treaty.

U.S. Preparations

U.S. Preparations have been actively under way since 1975 at the Department of State, the Federal Communications Commission, and the Office of Telecommunications Policy (now known as the National Telecommunications and Information Administration). The FCC is charged with primary responsibility for developing non-federal user requirements. The NTIA is primarily responsible for federal government requirements.

The FCC and NTIA are developing the different needs and requirements of the U.S. spectrum users through close consultation with each other and with the State Department. Industry and general public interests have been solicited by means of a series of public Notices of Inquiry, issued by the FCC. Eight Notices of Inquiry have been issued and additional Notices may be released in the future. The Notices treat different aspects of WARC planning, most notably changes in the international table of frequency allocations.

How Much Can World Politics Affect Amateur Radio Bands?

There has been speculation on how other nations

United Nations Photo

Headquarters of the International Telecommunication Union in Geneva, Switzerland.

view amateur radio. The concern seems to be focussed on how third-world governments place their communications priorities. At the time of past WARCs, many of these nations were colonies of the western nations and the voting power of these colonies was held by their respective ruling countries. The situation has changed enormously since the 1959 WARC; the number of independent nations has increased dramatically. In September of 1979, 154 nations will cast votes on the many issues facing WARC. Many of them will be nations which were not yet independent at the time of the last WARC. The balance of power has shifted.

These new nations are rapidly reaching the period when their development creates economic and social needs to fill. As their domestic and foreign goals become clear, amateur radio may not be so important to them when compared with commercial, military, and governmental interests.

If you look through the list of those who hold amateur licenses in developing nations, you'll find that many of the licenses are held by foreign nationals. In some nations, you'll find native-born hams in the government or military, but not in the population at large. Most African authorities consider hamming to be a "white man's hobby" and they discourage the population from getting involved with it. In many cases, licenses simply are not issued to natives of these nations.

Can world politics hinder amateur radio? This is a hard situation to get a handle on. One would think that the U.S.S.R. bloc might be against ham radio, but in 1959 a very curious thing happened. Most of the ITU members were attempting to slice up the ham bands and even threaten amateur radio's existence. Then, with the aid of the Communist votes and our hemispheric friends, we gathered enough support to salvage the service without losing a kilohertz!

Last time we went into the conference not asking for anything special, like the expansion of our bands. WARC '79 may see us asking for additional bands due to some services moving up to communication satellites and thus abandoning many shortwave frequencies. We may hear some countries suggest that CB should become a world service and share the ham bands with us. The political situation being played out at the U.N. and its agencies may spill over to Geneva. This would put the western world into opposition with the third world just because it is the fashionable thing to do. A 44-nation African bloc appears ready to vote for a set of world frequency allocations which will mean drastic cuts in the amateur bands. Many other third-world governments will probably follow this lead.

We do have strong support in some countries, including at least one in Africa. Liberia is a staunch advocate of ours because of the way ham radio aided that country during an epidemic. Central and South American governments know of our value in providing disaster and emergency communications. We do have friends who will stand by us, but the world is changing and only time will tell what will happen. ■

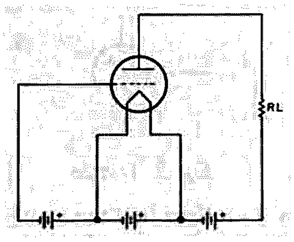

Fig. 4. Triode voltage polarities.

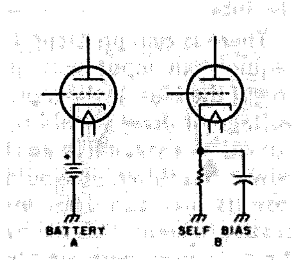

Fig. 5. Cathode bias.

Class B is biased to the cutoff point of the tube curve, draws current only when there is a signal applied, amplifies only part of the input signal per tube (one half), has an output that is proportional to the input, and is considered a linear amplifier. It is also a more efficient use of power.

Class C is biased beyond the cutoff point, only draws current and has output when driven into conduction, amplifies a smaller portion of the input signal (less than half), has the largest and most distorted output, and is not considered a linear amplifier. It is the most efficient use of the available power.

Class AB is a variation of the class B amplifier that is not fully biased to cutoff. It draws some current at all times, is more efficient than class A, but less than class B, and is less distorted than class B.

That's it for tube bias classes. There is one other thing about tube bias which should be mentioned. Most tubes will cut off with sufficient minus bias.

There is, however, one kind of tube that was designed so that it would not cut off in operation. This is the remote-cutoff tube (Fig. 9). This was designed for stages like rf and i-f amplifiers where avc (automatic volume control) action is desired. A strong signal would bias a normal tube to cutoff and the set would go dead. The remote-cutoff tube does not cut off. It just continues to reduce the gain. Strictly speaking, that is not a class of bias, but it does have an odd tube curve and function.

Now then, we come to transistors. Here's where we start to have troubles. Once again the flim-flam factor appears.

The transistor was a triode—nothing more. Not only that, it was a triode with all the troubles the tube triode had and a few more that tubes never thought of. It was the new toy that had to be sold and a great deal of effort went into making it seem like anything but a triode. All the bad things they said about triodes came back to haunt them. And they were trying to do all the things with a triode that they were using multi-element tubes for.

There were a few problems. In a well-designed circuit, a transistor can be a reliable circuit element, but many of the circuits were not designed well and got worse as they aged. This quickly gave transistors a well-deserved bad name. They had oversold their reliability and rushed into production with too many transistor circuits riding right on the edge of their technology. To sell them, they worked very hard to disassociate transistors from anything to do with tubes, particularly the triode.

As far as possible, new terms were given and even new ways of arranging the schematics so that transistor schematics often have circuit elements in different positions than a tube schematic would. All this overlooked one simple thing: There are far more similarities between tubes and transistors than there are differences. We will need to fill in just a few more tube items before we can fill in the blanks. There were some factors which were deliberately drawn to widen the gulf between the two when, in fact, they are just opposite ends of the same stick.

Way back, it was thought that the tube grid did not draw current, particularly in the class A amplifier stage and the early regenerative stages and so forth. One theory held that bias was a static charge, a potential difference as at the poles of a battery (which often supplied the bias voltage). While the voltage appeared as a static charge at the poles of the battery and at the tube elements, no actual current flowed. It was not, in that sense, a complete circuit.

But unless the Supreme Court has declared Ohm's Law to be unconstitutional, grids draw current. All grids draw current.

The problem was that the grid resistance might be several million Ohms and the voltage only a few volts. The current was so slight that it couldn't be measured without upsetting the circuit.

Much has been made of saying that the tube is a voltage-operated device and the transistor is current-operated, as if this was something different. Bunk! There is voltage and current floating around in both of them. You can't have one without the other, no matter who says what. Why then is there the big problem? It's a matter of impedance and sloppy wording. Here, we will have to use impedance and resistance interchangeably because we are dealing with both the static dc voltages and the signal voltages.

It is a matter of convenience to speak of the tube circuit as voltage-operated and the transistor as current-operated because of the resistance involved. For convenience, think of it as an amount of power, even though it may be small. The tube circuit has a high resistance. The signal is higher voltage, which means that the current will be very small. The equivalent signal in a tran-

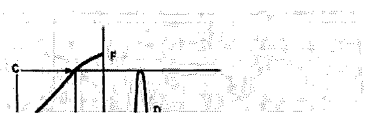

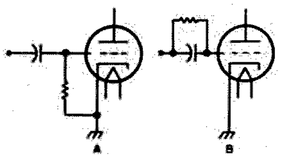

Fig. 8. Grid-leak bias.

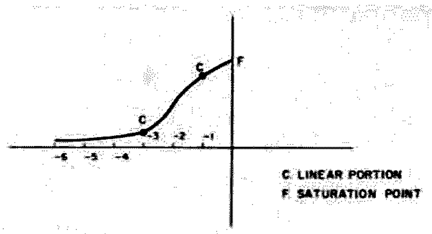

Fig. 9. Typical remote-cutoff tube curve.

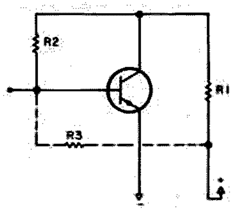

Fig. 10. A simple transistor bias circuit.

sistor is across a lower resistance, which means that the voltage on it will be smaller but the current higher.

You have seen this before with antennas. An end-fed wire is a high impedance point, which means a high voltage point but low current. A dipole is a low impedance feedpoint, which means a lower voltage but a high current. That's all you have with tubes and transistors. Just a matter of convenience when speaking of signal transfer. There is voltage and current associated with both circuits.

You will also see signal sources referred to as a current source or a voltage source. It's the same thing. The voltage source will be higher impedance and the current source will be lower.

Now we come to the matter of transistor bias. The classes of bias are the same for transistors as for tubes, and the definitions hold true for them, too. The transistor also has a linear portion of its "current-transfer" curve, and a cutoff point. We do have to make a distinction, though. Here, we are speaking of the normal bipolar transistor, not the field-effect type which will be dealt with later.

While the classes of bias are the same, they are arrived at in a slightly different manner. Even though the transistor is on the other end of the stick from the tube, in one way it behaves exactly opposite from the tube.

If you look at the tube curve, you will notice that when a tube receives zero bias, it will draw the maximum current, which can be unhealthy. The tube must be biased just to sit there. The transistor is just the opposite. Without bias, it will just sit there and be cut off. The trick is how you bias it.

Look at the circuit in Fig. 10. Resistor R1 is the load resistance for the transistor. It has the same function as the tube load resistance (RL). R2 and R3 are different ways to introduce bias to the transistor. R2 is one of the more stable ways to do it. Transistors are prone to a number of screwball bad habits. Thermal runaway is one. When it gets hot, it draws more current and gets hotter and draws even more current and pffft!

Either resistor will allow a certain amount of bias current to flow in the base circuit, which is how the transistor gets biased.

R2 gets the current from the collector resistor. If the stage draws more current, the voltage drops and the current drops through R2, helping to stabilize the collector current. That is a simplified circuit, but it would work as a simple amplifier.

Fig. 11 shows a few more resistors in there. R3 is the emitter resistor which is usually bypassed. It also has a stabilizing effect on the stage. Often its value is similar to many small signal tube stages, although it is not exactly the equivalent of the cathode resistor. R4 is something like a load on the grid, but also helps the stability of the stage. Its value is usually in the range of one-tenth the value of R2.

Now we come to the name-games people play. With the modern tube, you have the cathode, the grid, and the anode or "plate." Diodes have long had a cathode and an anode, but, when they got to the transistor, they had to think up some new names and came up with emitter, base, and collector. That's not too bad, just a little farfetched.

Then came field-effect transistors (FETs). They are the ones that think they are tubes. We get back to voltage-operated again. Also they wanted to disassociate them from those nasty old transistors that gave so much trouble.

FETs are compared to tubes because they are a comparatively high impedance device, more like tubes than transistors. The words "field effect" are used because it is the field of the input signal voltage that makes them work. They seem much more like tubes than bipolar transistors. It would never do to use the same names for their new toy, so they came up with source, gate and drain. How imaginative!

You still have the same classes of bias possible and bias is accomplished with FETs much the same way it is with tubes.

There are applications with some tubes and FETs that don't use an external bias. These are small-signal amplifier stages. The usual high load resistance limits the current as well as providing the load. The tiny input signal to the stage has the effect of riding in a linear portion of the curve over a short distance. Even so, the tube does provide a tiny amount of self-bias, too.

Which brings us back to the beginning. The transistor is just another kind of triode. Tube and transistor bias do the same job for the same reason. They just do it somewhat differently.

A tube is biased by applying a negative voltage to the grid or by making the cathode more positive than the grid.

A bipolar (ordinary) transistor is biased by applying a small current to the base, or by biasing the emitter with respect to the base.

An FET is biased roughly the same way a tube is biased. The voltage and currents will be smaller, though.

The FET either biases the gate negative or the source positive with respect to the gate, if an N-type, the reverse if a P-type.

While this discussion has been a little shy on numbers and practical applications, it should help you make sense of the more detailed descriptions of tube and transistor theory: a backbone upon which to hang more detail. ■

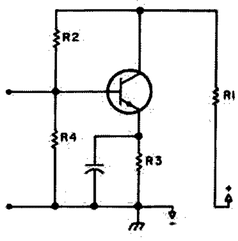

Fig. 11. Conventional transistor bias arrangement.

Build the Flexi-Filter

—a very active device

Donald Moran W3QVZ
3663 Hipsley Mill Road
Woodbine MD 21797

Ever have need for an active filter with tunable multiple outputs, i.e., high-pass, low-pass, bandpass, and a very sharp rejection notch? The filter described is a "state variable filter" (svf). The svf described here has an operating frequency of 6 Hz to 60 kHz. A good discussion of this type of filter may be found in the *IC Op-Amp Cookbook* by Walter Jung and the *Active Filter Cookbook* by Don Lancaster. This svf uses 5 op amps. Four of the op amps are contained in the quad 3403 unit and U5 is a single LM318. (See Fig. 1.)

The various control functions and input/output connections can be seen in this photo. The various filter functions are available simultaneously at the various phono jacks. For those only interested in general communications use, the top and bottom frequency ranges may not be wanted. In this case, only two values of C1 and C2 would be required. .022 and .0022 uF capacitors could yield a range of 60 to 7000 Hz.

Functionally, the state variable filter uses three or four op amps. Two op amps, U2 and U3, are connected as inverting integrators in cascade. The output of the second op amp integrator is unity gain, and is inverted and fed back to the input of the first integrator, U2. There is also a feedback loop from the first integrator back to its own input to provide a controllable amount of damping.

The input summing stage, U1, combines oscillatory feedback, damping, and input signals. If U1 has properly scaled input and feedback resistors, you can independently control circuit gain, frequency, and damping. The function of U5 is to correct the bandpass output phase so all three outputs will be out of phase at resonance, and increase the gain of the bandpass channel by about 3 dB, thereby making the gain of all three outputs equal within their respective passbands. From Jung's *IC Op-Amp Cookbook*, page 337, for the circuit in question: Given f_1, Q_1, and H_o (passband gain), select C1 (C2). $R_1 = 1/(2\pi f_c C1)$. Choose R3, R4 = QR3, R7 = R6Q/H_{obp} Example: f_c = 723 Hz, Q = 20, H_o = Q. If R1 = R2 and C1 = C2 and R5 = R6 = R7 = R8 = 10k, $f_c = 1/(2\pi R1C1)$, Q = R4/R3, Hobp = R6/R7(Q), C1, C2 = $1/(2\pi R1f_c)$ = .022 uF for R1, R2 = 10k.

Construction

As can be seen from the accompanying photos, the unit is housed in a Bud sloping-panel cabinet, Model AC1613. A piece of single-clad phenolic board was utilized. An isolated-pad drill mill was used to produce isolated pads through which Vector "Mini-Klip" pins were pressed in and soldered. The layout and wiring are not critical.

Filter Measurements and Operation

The operating controls of the filter are self-explanatory and may be observed in the accompanying photos. The curves in Fig. 2 were made as described in the block

diagram of Fig. 2. The audio oscillator output was set at 100 mV at a frequency of 1 kHz. The filter attenuator was then adjusted to produce 250 mV output. Setting 250 mV = 0 dB, the low-pass filter curve was plotted. As indicated in Fig. 2, the Q control must be adjusted by trial and error for the smoothest (without peaking) roll-off. The roll-off was also observed with a swept 70 to 10,000 Hz audio signal applied to the filter (see Appendix). The Q control could then be adjusted by watching the scope presentation for optimum roll-off shape. The same routine was used in the plotting of Fig. 3. The change in the setup in the plotting of Fig. 4 involved changing the tuning control to 1.5 kHz and the Q control to near minimum. The tuning control must be very carefully set at 1.5 kHz or an asymmetrical plot will result. Examination of the 6 dB points of the notch plot shows a Δf considerably under 100 Hz. Fig. 5 setup conditions were 10 mV filter input with the filter attenuator adjusted to yield 40 mV at the bandpass output jack. The tuning control was rechecked for an accurate 1.5 kHz setting and the Q control was set near maximum. This curve indicates a Δf substantially less than 200 Hz. When this filter was built, no attempt was made in matching the resistor and capacitor values in the tuning circuits (components with asterisks in schematic). An improvement in maximum selectivity may be possible by doing this, for those concerned with obtaining optimum selectivity.

Filter Tests

I have made a number of listening tests on my Kenwood R-599 receiver with the filter interposed between the receiver output

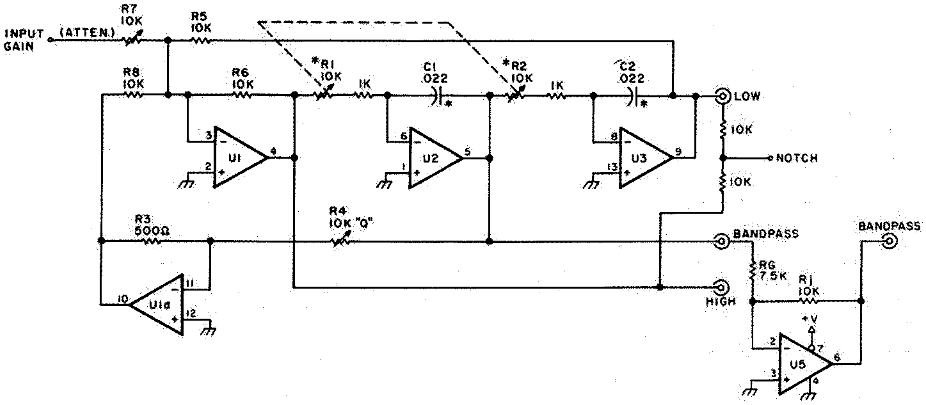

*Fig. 1. Versatile audio filter schematic diagram + V = pin 14; − V = pin 7. U1, U2, U3, U4 = 3403 quad unit. U5 = LM318. Tune with *R1, R2 = ganged 10k pot. If *C1, C2 = .022 uF, f_C = 723 N, with RF1, R2 maximum. Range switch not shown. C1, C2 = .0022, .022, .22, and 2.2 uF.*

(headphones jack) and a pair of low-impedance headphones. The filter will produce as much as 2 volts rms output into a low-impedance headphone load with only a few mV rms input at the bandpass output jack of the filter, with the filter attenuator set at minimum. One can then listen to sideband signals with typical QRM situations and hear the effect of the low-, high-, or bandpass filters by varying the filter tuning and Q controls. The notch output was very effective in rejecting CW signal interference when listening to phone signals. The receiver output was also fed through the filter to a separate audio power amplifier driving a speaker to compare more directly with the receiver's own speaker output. There was definite improvement in the clarity of reception of various phone signals (SSB) by juggling the tuning and Q controls and listening at various filter output jacks. The filter was not as selective as the Kenwood fixed-tuned CW filter regarding CW reception, but was definitely superior as an adjustable phone filter. The Kenwood SSB selectivity position is a low-pass filter rolling off rapidly beyond 2.5 kHz. While generally satisfactory, under extreme conditions of QRM, the audio filter afforded definite improvement in speech intelligibility and reduction of prolonged listening fatigue.

Another interesting application for the audio experimenter would be as an audio sweep marker. By interposing the filter between the audio preamp output and power amp input and applying a swept audio signal to the audio system, the rejection notch would appear on the scope presentation as a narrow notch in the sweep. The position and depth of this marker would be a func-

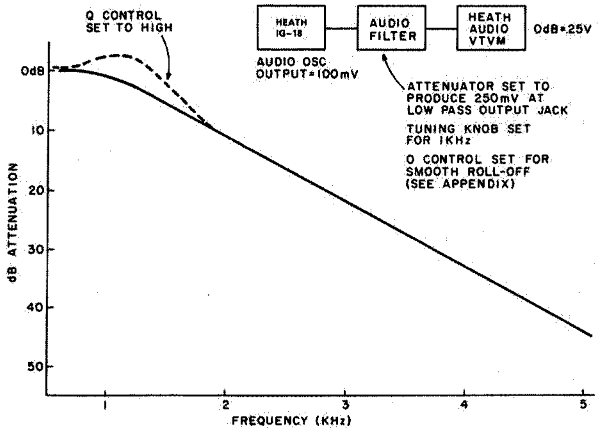

Fig. 2. Low-pass filter characteristics.

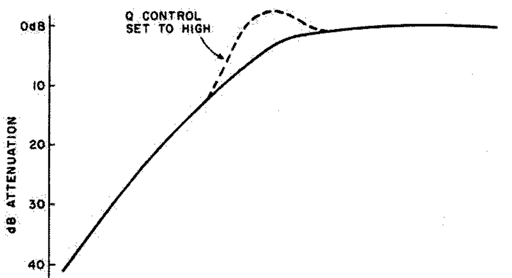

Fig. 3. High-pass filter characteristics. The same test conditions as Fig. 1 were used except for 250 mV at the high-pass filter output jack.

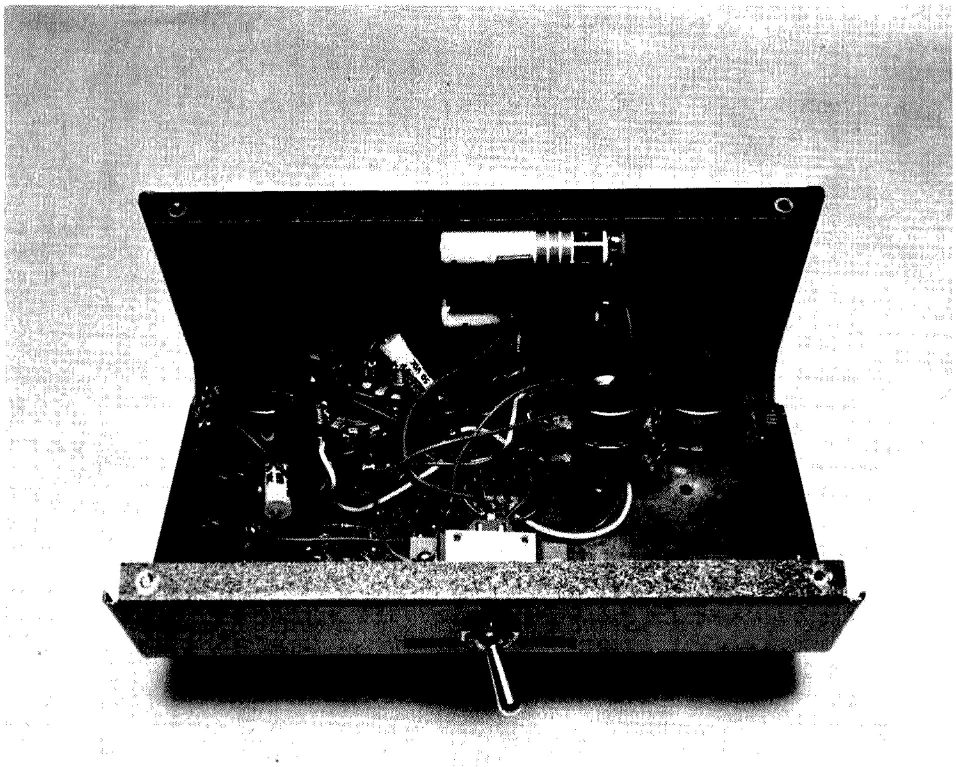

Bottom view shows copper-clad phenolic board construction as explained in text.

tion of the tuning and Q controls respectively. Any portion of the audio sweep could then be read from the frequency dial on the filter. This would be convenient for measuring roll-off rates of other filters under test, equalizers, etc. The audio filter tuning dial was calibrated by applying a known audio frequency and peaking the tuning control (while observing the output in the notch mode) for a null. This mode was used since it has the sharpest tuning indication.

Conclusion

The application of the filter is limited only by the imagination of the user. In the notch mode, it could meet highly selective nulling circuit requirements such as tape-beep cueing removal, suppression of QRM in SSB and CW signals, 60-120 Hz hum suppression, etc. The notch mode could also be used as the basis for total harmonic distortion analysis measurements. The state variable filter makes available an active filter with high stability, predictability, and wide tuning range at a very moderate cost and relatively easy construction.

Appendix

A measurement was made (data not included) which consisted of applying a swept audio signal to the audio filter. The source was a "Clarkstan" sweep frequency phonograph transcription played back through a very flat Empire phono pickup. The filter was connected at the output of the audio power amplifier and an oscilloscope was connected to examine each filter ouput mode. The characteristics of the sweep record were a Δf of 70 to 10,000 Hz, at a 20 Hz sweep rate. The effect of the Q control of the high- and low-pass filters' roll-off rates was observed. The roll-off rate could be controlled (increased or decreased) by the Q control, but a setting yielding a smooth roll-off was set to plot Figs. 2 and 3. Higher settings of the Q control were employed when plotting the bandpass mode, Fig. 5. The dotted lines in the plots of Figs. 2 and 3 indicate the effect of raising or lowering the Q control settings. High-Q operation really only pertains to the bandpass mode. As can be seen, an excessive Q setting produces a hump or peaking in the low- and high-pass modes near the cut-off frequencies. Excessive Q in the notch mode likewise reduces notch selectivity. A Q value of $\sqrt{2}/2$ theoretically produces minimal peaking (Butterworth response). For those desiring more detailed design information on the state variable filter, as well as other types, a copious amount of data is available in the aforementioned books by Jung and Lancaster. ■

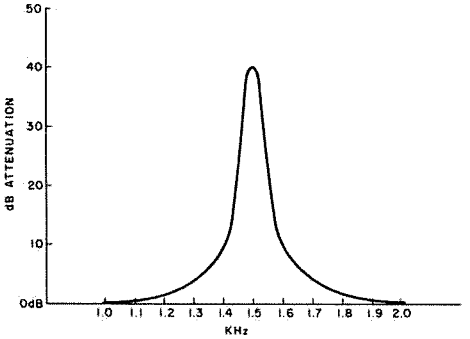

Fig. 4. Notch filter characteristics. The same test conditions as in Fig. 1 were used except the tuning was set for 1.5 kHz and Q control was set for best notch (near minimum Q setting). See Appendix.

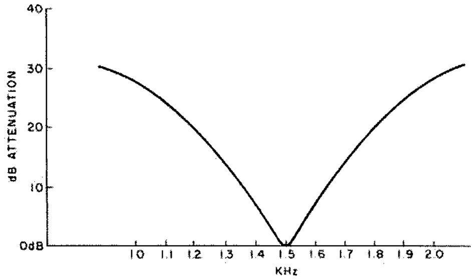

Fig. 5. Bandpass filter characteristics. The same test conditions as Fig. 1 were used except 10 mV input to filter, attenuator set for 40 mV output for bandpass output jack, tuning control peaked at 1.5 kHz, Q control set near maximum. See Appendix.

The Klassic Kilowatt

—four 811As do it

Dave Ingram K4TWJ
Eastwood Village No. 604N
Rt. 11, Box 499
Birmingham AL 35210

One of the most popular rf amplifier circuits in use by today's amateurs is a grounded-grid configuration of 811A tubes. Four of these tubes can provide the basis of a flexible and economical amplifier which uses readily available parts, operates from home brew 110-volt power supplies, and is only 2 dB weaker than a large, power-consuming 2 kW unit. My previous experiences with "legal limit" amplifiers have been a combination of back-breaking power supplies, special 220 V ac lines, elaborate cooling systems, and offensive TVI. Few problems have been experienced with this 811A amplifier, however, and I still have plenty of power for competitive operation in DX pileups.

The circuit (Fig. 1) of my amplifier is not a new design. It has been used (and proven!) in equipment for several years. A very similar circuit is used in the Collins 30L-1 linear amplifier. The difference in my unit is its layout and design for station compatibility. Rather than using a surplus

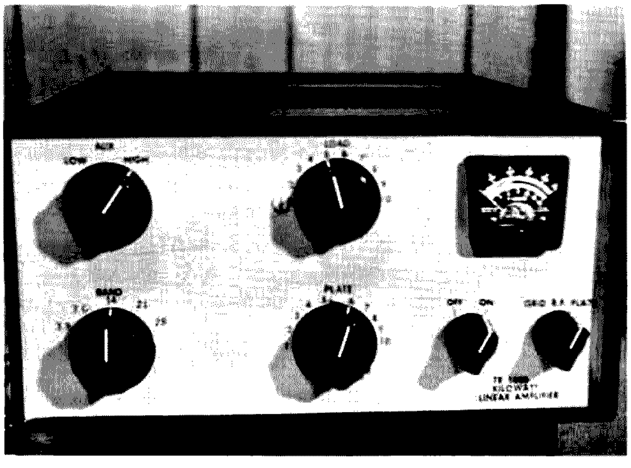

Front view of classic amplifier shows R.L. Drake cabinet and knobs. Illuminated Heathkit-type meter is modified to read amplifier plate current, grid current, and relative output.

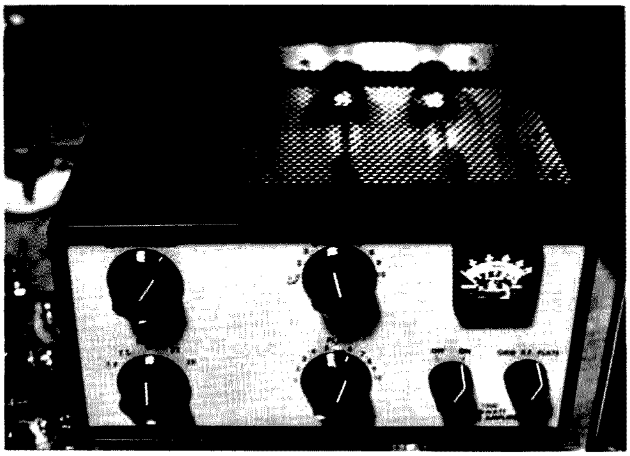

Classic amplifier in service and operating normally. The 4 811As add a soft glow to any ham shack. Room is dimly illuminated for slow scan TV operations.

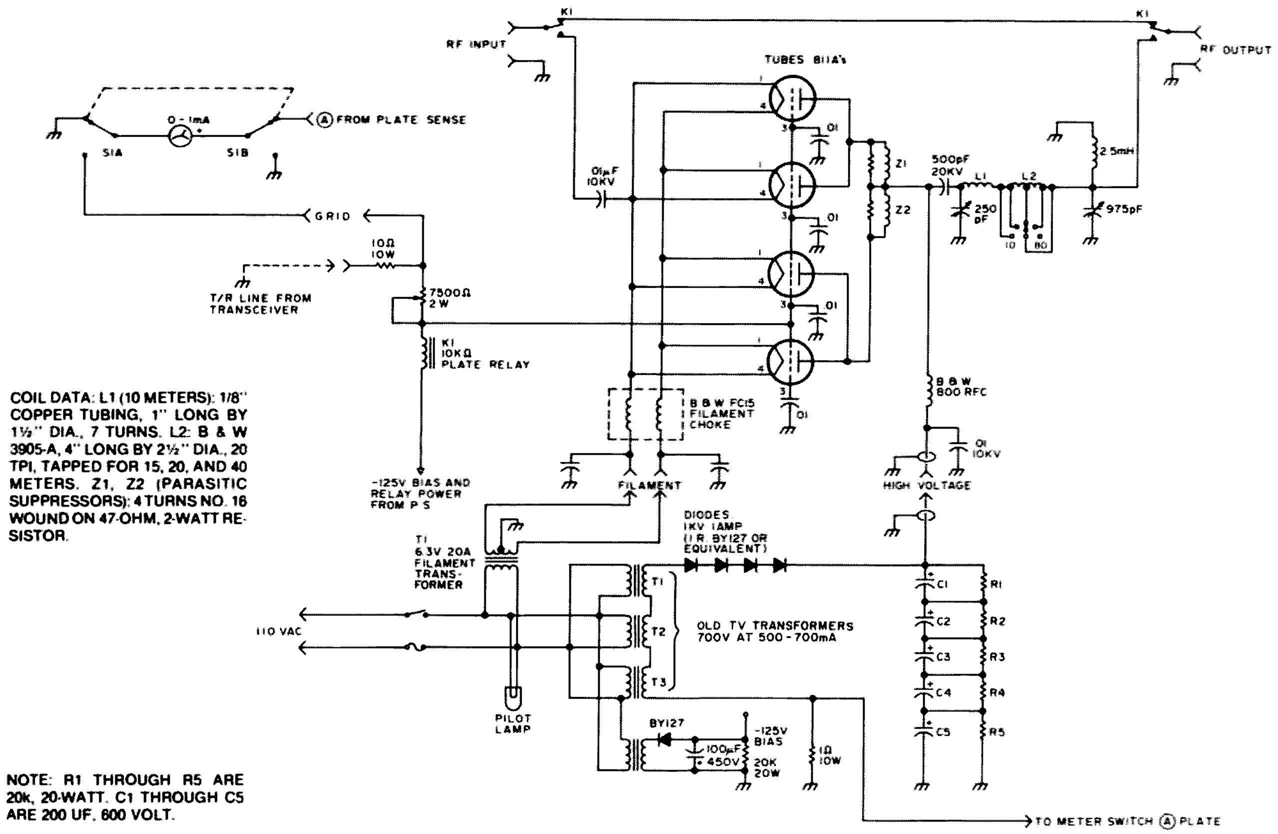

Fig. 1. Classic rf amplifier schematic diagram.

enclosure for the amplifier, an empty cabinet that matched my transceiver was purchased directly from the manufacturer. Matching knobs were also purchased from the same manufacturer. In addition to working beautifully, the completed amplifier blends perfectly with my other station equipment. The overall result (which includes similarly matched slow scan TV gear) is a "commercial" appearing setup that's enjoyable to own and operate. The information presented in this article is intended to serve as a guideline for others desiring to construct amplifiers, antenna tuners, monitors, etc., which may also match their particular setup.

Amplifier Mechanical Details

The amplifier's 811As are mounted horizontally in the cabinet and all input circuitry is mounted in the 811As' rear-supporting chassis. A bottom plate is fitted to this chassis, thus totally isolating input and output signals. This design eliminates the necessity of neutralizing the amplifier. Four pieces of 3-inch metal channel (I used Seezac plates) are fitted together and used as a framework for the amplifier. The upright rear chassis and front panels are bolted to this frame, as shown in Fig. 2. All the amplifier's output circuitry is mounted in the center of this "free air" space. Exact size of the vertically mounted rear chassis and metal framework varies with the specific cabinet used to house the amplifier. A small minibox, with holes for the front panel meter and incoming wires, is used as an rf-proof meter case. The meter switch and the meter's pilot lamp are also enclosed by this case. The plate-tuning and load capacitors are surplus units which mount directly to the amplifier's front panel. A 10 meter tank coil is mounted between the plate-tuning capacitor and bandswitch, while the larger tank coil mounts behind the bandswitch. Both coils are supported by their leads. A small phonograph motor fan, mounted on the amplifier's left side, cools the tubes during use. Sub-chassis mounting of the 811As is accomplished by using long screws and spacers, as shown in Fig. 3. A similar arrangement permits all rear panel amplifier connections to protrude through the removable rear chassis plate.

Due to the high temperatures produced inside 811As during normal service, their rectangular-shaped plates should be situated vertically for structural support, as shown in Fig. 4. This will prevent a hot filament from falling against a grid or plate.

A local sheet metal shop cut and drilled the amplifier's front panel for five dollars. I merely painted the panel to match my TR-4 and mounted it on the amplifier. The amplifier's framework is directly mounted in the bottom part of the TR-4 cabinet, and a thin piece of extruded aluminum covers the inside of this bottom to prevent TVI. The rectangular slots in the bottom part of the cabinet would allow rf to "leak out," but the round holes in the extruded aluminum prevent rf leakage.

Amplifier Circuit Details

As previously mentioned, the basic circuit of this amplifier has been in use by amateurs for several years. Similar circuits have also appeared in many amateur publications and handbooks. The minor variations of components in each schematic are

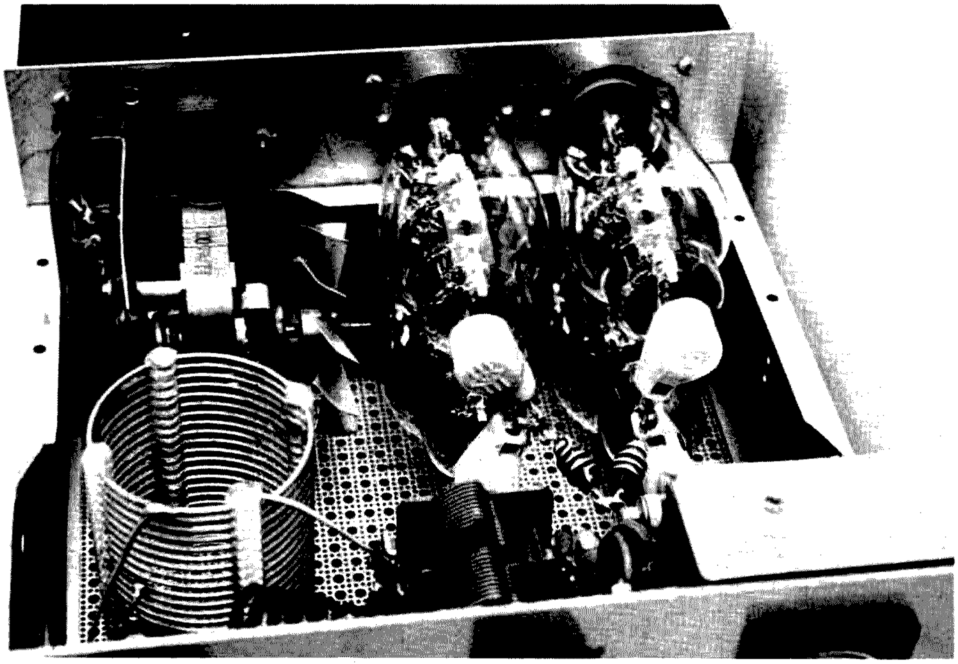

Interior view of kilowatt amplifier reveals layout of components discussed in text. Note extruded aluminum lining in bottom of cabinet for TVI reduction.

prime examples of the amplifier's flexibility. While some 811A circuits include tuned inputs, my unit simply feeds incoming rf directly to the 811A filaments through a .01 uF capacitor. Naturally, tuned inputs for each band can be included if desired. Suitable filament chokes which may be used with the amplifier are the B&W FC15A and FC25A or Amidon's new filament choke kit. The filament choke in my particular amplifier is an SB-200 replacement type obtained from Heathkit.

Although a B&W 851 tank coil and bandswitch assembly may be used in this amplifier, I used a 4-inch section of B&W 3905 coil stock and a separate 10 meter coil. Approximate tap positions for each band were located using a grid-dip meter. Then, exact positions were located by moving these taps ±3 turns and noting the corresponding change in output power. Presently, the amplifier's 20 meter output power is 750 Watts. The bandswitch is a relatively heavy-duty unit obtained at a hamfest bargain table. Any porcelain switch with large contacts should work equally well.

T-R switching and 811A biasing is accomplished through the use of a −125 V dc divider network, which consists of a sensitive 10k Ohm plate relay and a 7500 Ohm pot. This network is ungrounded during receive, thus applying approximately −125 volts to the 811A grids as cut-off bias. When the transceiver's relay grounds this T-R line, tube bias is reduced to approximately −4 volts. The pot should be adjusted to produce 60 or 70 mA of idling current on the 811As (transmit mode with no input driving signal), and the amplifier is ready for action.

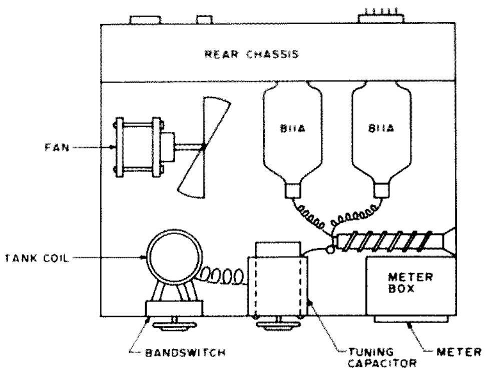

Fig. 2. Top view of component layout in kilowatt amplifier.

Power Supply Details

Operating voltages for the amplifier are furnished by a home-brew power supply built in two mating chassis. A sketch of this unit is shown in Fig. 5. Three large series-connected TV transformers are mounted inside the bottom chassis. The filament transformer, bias-supply transformer, and power control relay are also mounted in this chassis. The series rectifier and filter capacitor board is mounted on top of this chassis. The upper chassis provides a "top" for the power supply. It is cut and fitted with corrugated aluminum for ventilation. The two chassis are held together by a front panel and a steel strap screwed into the rear of both pieces. A sheet of heavy perforated aluminum also covers the bottom chassis, thus serving as a bottom cover for the power supply. A "whisper fan" is mounted above the power supply to provide additional cooling.

Operation

Amplifier tune-up is straightforward and follows conventional plate-tuning techniques. Remember to use minimum rf drive when initially loading the amplifier to avoid high off-resonance plate current. If you have any old 811As, this initial tune-up time is ideal for their use. Once the amplifier is working properly, you can make a chart of the load and plate settings and output

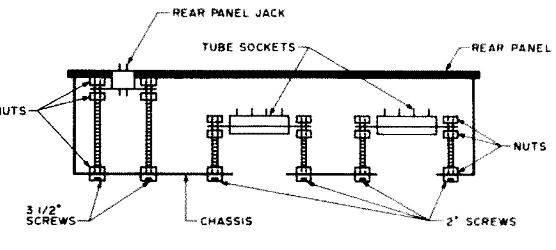

Fig. 3. Mounting arrangement for tube sockets and parts used in the amplifier.

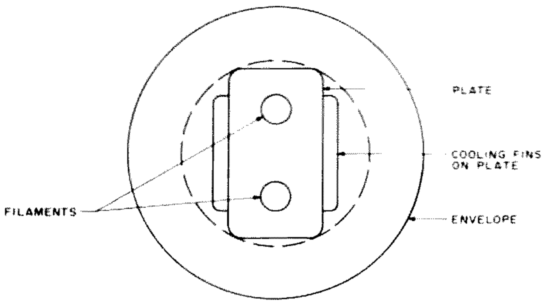

Fig. 4. End view of 811A as seen from front panel. The filaments should be positioned as shown. The top of the illustration corresponds to the top of the amplifier.

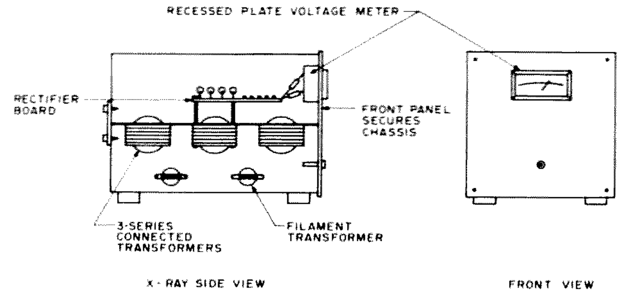

Fig. 5. Power supply cabinet arrangement.

power level for each band. This chart will serve two purposes: It will help keep you from running the plate current more than 50 mA off resonance and it will help you realize when the finals eventually begin to lose output.

Typical operating parameters of my amplifier are 1700 volts at 800 mA on 20 meters, producing 750 Watts output. These rf levels are possible because grounded-grid amplifiers allow the driving power to directly add with the output power.

Conclusion

As this article illustrates, the 811A amplifier is one of the most versatile and inexpensive amplifiers that an amateur can build and operate. The concept of separating rf and power supply sections is also quite appealing to many amateur setups. The time-proven circuit is easily adapted to one's particular station arrangement, thus producing a reliable finished product which can be enjoyed for many years. Recently, I purchased a new R. L. Drake TR-4 CW transceiver and considered purchasing a new linear amplifier also. After several weeks of deliberation, I concluded that my seven-year-old 811A amplifier couldn't be beat. I replaced tubes and filter capacitors, cleaned it like new, and it's now ready for another seven years' service. What more could one ask?

I would like to thank Erskine Jackson W4CEC for his assistance in the design and layout of this amplifier. Erskine's ingenuity was the prime contributing factor to the amplifier's professional results. Thanks also to Robert Perkins of Birmingham AL for special processing of the photographs used in this article. ■

Ham Radio Goes to School

—10-year-olds love it!

William L. Lazzaro N2CF
11 Jefferson Street
Highland Mills NY 10930

"Hey, Mr. Lazzaro, we got Maine! Our RST was 579, and the guy didn't believe us when we told him we were only 10 years old."

Teaching fifth-grade youngsters at Montebello Elementary School in Suffern, New York, has been an exciting experience for me. But when I introduced my students to amateur radio, my vocation as a teacher took on incredibly exciting dimensions.

I began my introduction to amateur radio one day without prior announcement. It was in December, 1975, and I had just purchased a new Yaesu FT-101B. I obtained permission from the principal to put up a 40 meter dipole and I was in business! As the children came into school that day, their attention focused on the gray box in the corner of the room. Ten-year-olds are curious souls and they had many questions about it. Finally, the moment arrived for our first QSO. I went back to the rig, grabbed the mic, and called my first CQ. That CQ has echoed in the halls of Montebello School for the last three years. Little did I know at the time that I was ushering in a new era of excitement for those elementary-school students.

In that first year of operation from my classroom, we worked 17 states. All my students received QSL cards from gracious amateurs and everyone had a chance to talk over the air.

It wasn't long before my students wanted to know how they could become hams. I explained the FCC requirements for the Novice license, but I personally felt 10-year-olds were just too young to get a license.

Since fifth-graders enjoy secret codes and ciphers, I introduced my students to Morse code. To my utter amazement, all my students loved it! Many learned it so well they could communicate effectively in code. The year ended in June with sad faces as my students and I realized our exciting year with ham radio was ending.

The next September, I began teaching radio theory and Morse Code long before I brought in my rig. Our year was very successful in making contacts, but the children loved the code the best! The proficiency exhibited by the majority of my students amazed all who witnessed it. We had sent Morse code with flags from mountaintop to mountaintop while

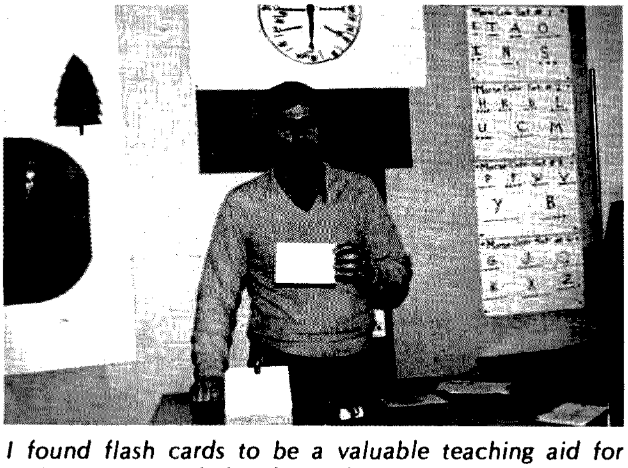

I found flash cards to be a valuable teaching aid for reviewing material already taught.

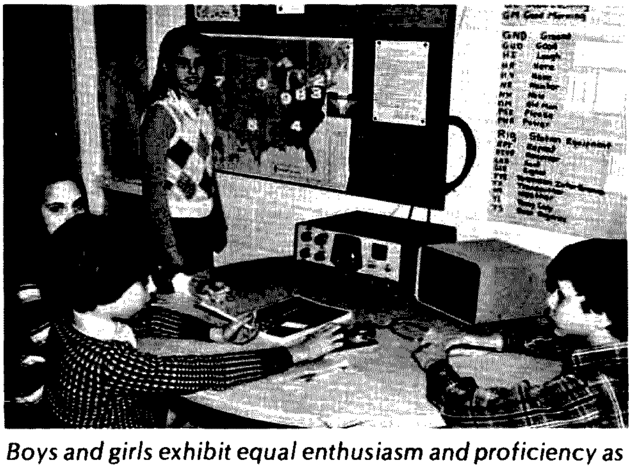

Boys and girls exhibit equal enthusiasm and proficiency as operators.

hiking, and we sent messages across a lake at night using flashlights while camping. We even made some on-the-air CW contacts! I was now convinced that the average 10-year-old could learn the code and use it proficiently.

As September, 1976, rolled around, my attitudes toward the possibility of 10-year-olds getting licensed were changing. One of my first-year students had gone to get his General class license! He skipped the Novice license, stating it was too easy! (Presently he is in ninth grade and holds an Extra class license with a 1 x 2 callsign to boot!)

I taught my students the code and I operated portable from my classroom with the FT-101B. As spring came, I had a group of six students, three boys and three girls, who were most proficient at code *and* who wanted to be hams. I decided to see how much theory they could learn. We began classes at noon hour and recess. They learned quickly as long as I taught them in little steps and on one topic at a time. We reviewed constantly what I had already taught. (Later I was to find out that flash cards would be of great help in reviewing.) In May, all six took their Novice exams and passed!

The realization that I had a problem now became apparent. I had six 10-year-old licensed radio amateurs on my hands and no gear for them to use, save a CW QRP rig I had built. It was ludicrous to think a fifth-grader could finance his own station, so I began the search for funding for ham radio equipment to be located at school.

My principal alerted me to the possibility of a donation from our Parent-Faculty Association. It seemed that they had had an unusually successful year at fund-raising and they were looking for a gift to present to the school.

I wrote out a detailed proposal for the station equipment I needed and I planned an extracurricular program for a ham radio club. I presented my plan to several members of the PFA executive board and I received a chilly response. I would have to convince the PFA that my plan was worthy of their support if I was to get the funding I requested.

An invitation to speak at a PFA meeting gave me my opportunity to "sell" ham radio. After carefully planning my presentation, I gave it to them with all the enthusiasm of an ardent amateur radio operator! As the meeting ended, I not only had gained the funding I requested, but I also had many offers of help! Even some of the mothers asked if they could get their own ham licenses through my program!

I was thrilled! My dream of having an amateur radio club station at school was going to be a reality. Unfortunately, I was to learn that several problems would have to be solved before my dream came to fruition.

The first difficulty I experienced was finding gear. I had received enough money to purchase a low-cost used SSB transceiver. My first inclination was to check the classified ads in ham magazines. There was nothing listed at that time which was suitable. Then I began calling dealers, hoping to find a trade-in. I contacted more than ten dealers and none of them had a thing. At this point I became aware of the severe scarcity of low-cost used ham gear.

I wondered if I'd be able to find appropriate equipment in my budgeted price

Brian WB2QOV demonstrates the way it's done.

range. My search lead me to a brokerage firm. They had a Heathkit HW-100 listed. I snatched it up immediately and considered myself lucky.

Setting up the station was relatively easy. I attached 2 x 4s about eight feet high to protrusions on the roof of the school, and I strung up my dipoles. As I ran my transmission lines, I wondered about the line loss. Each transmission line had a run of 200 feet and we couldn't afford anything better than RG-58/U coax.

My concerns were calmed, however, as I loaded the forty meter dipole and worked several stations with good reports.

It was difficult to contain my excitement any longer. Although it was only August, I called together my vacationing Novices for a club station christening.

We met together after nearly two months without any CW practice. As we sent our first CQ with the club station, six nervous Novices, armed with pencils and paper, crowded around the HW-100 anxiously waiting for a contact.

Suddenly we heard the sweetest sound any ham can hear! Our callsign was being sent to us in pure dc notes. It was music to our ears!

The excitement of that moment quickly turned into a mild panic as rusty minds struggled to copy the callsign being *sent to* us. "I didn't get that." "He's sending too fast." "What's ·—··?" "I can't remember." These words

Several YLs log another QSO made from our club station, WB2RZP.

filled the station as nervous hands wrote the message being sent to us.

Once it was our turn to transmit, another problem developed. "What should I say, Mr. Lazzaro?" was the question asked of me. As I hurriedly wrote out a message format, I began to realize that I still had a lot to teach these newcomers. CW abbreviations and operating format were not required material to get a license, yet they were essential to know. I had to teach these Novices this material and fast.

Later I prepared a wall chart of a typical QSO and another with common CW abbreviations. We worked together to learn both. Once this was accomplished, I thought my problems were solved. Not so!

For some time, my students made hit-or-miss contacts. Sometimes they achieved complete QSOs and other times they only received the callsign of the other station. Then the percentage of incomplete contacts or no contacts began to outstrip completed QSOs. The log showed remarks like "lost transmission" and "QRM." I decided to go on the air myself and see if the rig was working properly. I made a contact immediately and had a complete QSO without any difficulty. I was sure the rig worked.

That week I made arrangements to actually be in the ham shack while the Novices went on the air. After only a few minutes, I realized the problem. They were sending CQ at about thirteen words per minute. When a station answered them at that speed, no one could receive it, since their code speed was still well below thirteen wpm.

We set up a verbal rule stating: "Send only as fast as you can receive." That corrected our problem.

The logbook began filling up with completed QSOs. We even began collecting QSL cards at a high rate of speed.

After-school Novice classes commenced in October of 1977. By February, 1978, we had ten more Novices, with more on the way.

Today the Novices are operating at lunch and recess for one hour a day. Those who have taken their exams and are waiting for the results act as third parties when the Novices operate. These future hams are getting actual on-the-air experience while learning what they will need to know as operators.

My program has arrived at almost a self-perpetuating point. There are children at all levels, with those children at the higher level helping those at a level below them.

The excitement generated by our ham station has been incredible. Students are signing up for my Novice classes in droves (I had 35 in the fall). Children talk about their ham radio contacts instead of talking about television shows. At recess, children send code to each other using buzzers instead of playing games.

It should be noted that of twenty-six Novice operators, there are ten YLs. I made it a point to encourage both sexes equally. It has paid off!

Montebello School hasn't been the same since that first CQ in 1975. We are now looking ahead to upgrading and the joys of General class operation. But can ten-year-olds get a General class license? I wonder. Here we go again! ■

Reader Service—see page 323

Jim Garrett K5BTV
619 Cimmaron
Lewisville TX 75067

What's Your uF?

—a six-digit answer

The following project yields a simple but accurate digital meter to measure capacitance values from 1 pF to 999999 pF (1.0 uF).

Theory of Operation

The theory of operation is based on the equation $I = C(dv/dt)$. Rearranging the equation, $C = I(dt/dv)$, where C is pF, I is microamperes, dt is increments of one μs, and dv is change of voltage in volts across the capacitor.

In other words, if a counter chip were to count the time it took a given capacitance to charge from a constant current source to some fixed voltage level, that count would be equivalent to the capacity being measured. A block diagram in Fig. 1 further describes the operation.

The start-measurement switch drains the charge from the capacitor under measurement and diverts the constant current source to ground. Also, the 1 MHz pulses are not allowed to accumulate in the counter.

Upon activating the start-measurement switch, the capacitor begins charging. The counter is accumulating the one microsecond pulses, and the race is on. The capacitor charge voltage, upon reaching the threshold of the count-inhibit line of the counter, prevents the counter from accepting any more 1 MHz pulses. Therefore, the contents of the counter can be displayed directly as the value of the capacitance being measured.

Returning to the equation one last time and assuming an example, examine what capacitance is represented in the following (where $I = 5$ microamperes $= 5 \times 10^{-6}$ Amp; dt = 47 microseconds = 47×10^{-6} sec.; and dv = 5 volts):

$$C\text{ pF} = [(5 \times 10^{-6})(47 \times 10^{-6})]/5$$
$$= (235 \times 10^{-12})/5\text{ pF}$$
$$= 47\text{ pF}$$

So far, theory shows the approach to be a workable idea. To reduce this theory to actual practice, the use of the schematic shown in Fig. 2 resulted in being able to measure capacitance to within ±5%, or ±1 pF, whichever is greater, from 1 pF to 999999 pF (1.0 microfarad). Now those unmarked capacitors can be accurately measured and their values displayed digitally.

The Schematic

The key to the simplicity of the capacitance meter is the MK50395N six-decade counter manufactured by Mostek. This counter performs the tasks of counting up or down, is presettable, has a compare register that provides an equal output when the counter contents equal the register contents, and also provides seven-segment and BCD output data. The list of features continues, but those interested can get the data sheet by writing Mostek, Box 169, Carrollton TX 75006.

The 1 MHz oscillator is arranged using U1, CMOS NAND gates, and is a standard design. Since extreme accuracy was not a requirement, no frequency trimming or special crystal tolerance is specified. This should simplify and lessen the expense of the components. U2 provides the control functions necessary to operate the meter.

Linear amplifier A1 is a dual bi-fet high input impedance amplifier. A1 is wired to drive a constant current (adjustable by R4) through the capacitor being measured. Amplifier A2 is used as a comparator so that, when the output of A1 reaches a predetermined voltage, A2 switches its output from zero volts to V+. This action prevents further counts from accumulating in the MK50395 counter. The diodes from digit strobe lines on the counter feed preset counter BCD inputs A and D. This results in digit 6 down to digit 3 having a 9 preset into it. Digit 2 is loaded with an 8, and digit 1 (LSD) is loaded with zero. The BCD inputs have internal pull-down resistors, so a zero will be loaded into the unconnected BCD input ports. More on this in the calibration sequence.

A single-pole three-position break-before-make switch is used to provide the control sequence for the unit. On the schematic, position A is the

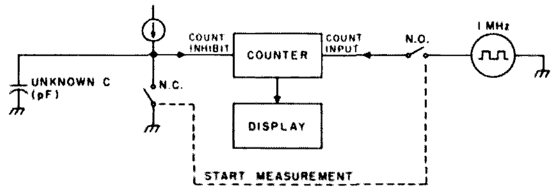

Fig. 1.

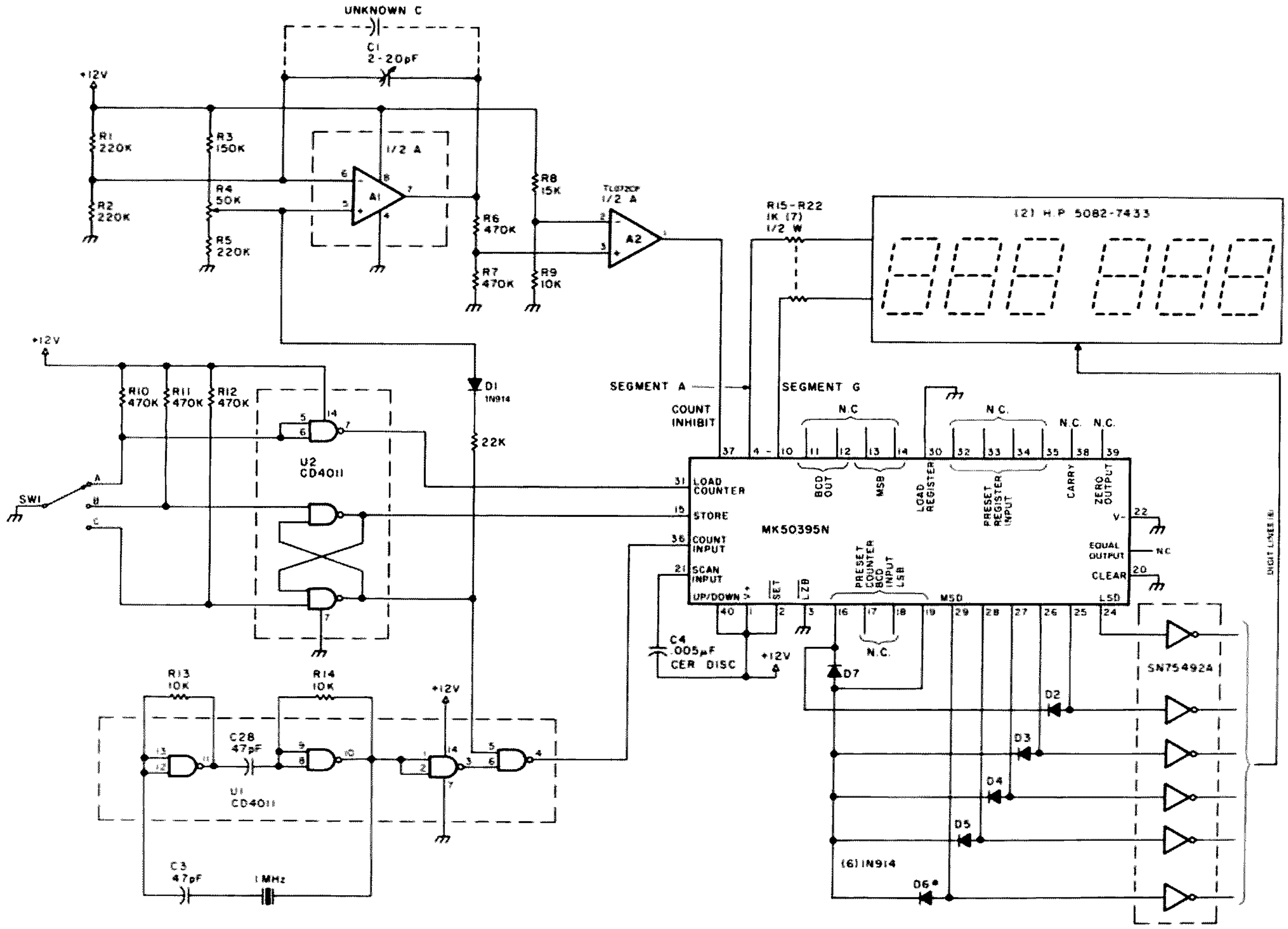

Fig. 2. Note: Capacitors are silver mica unless otherwise specified. Resistor values are 10%, ¼ Watt unless otherwise specified.

starting point. While in position A, the counter is being loaded with 99980.

Position B stores the data in the counter display after a capacitor measurement.

Position C initiates a measurement.

Upon returning to position A, the value of the capacitor measured will be stored for display and the counter preset for the next measurement.

The unit utilizes leading zero suppression, so, when the counter contains all zeros, the display will show only one zero when turned on.

Calibration

Calibration is accomplished in two steps: high value and stray. 1,000 pF 5% silver mica or other high-value close-tolerance units may be used for the initial setting. Since most capacitors are ±20% tolerance units, extreme accuracy is not a requirement, and the silver mica units will provide sufficient accuracy if closer tolerance units are not available. 1,000 pF to 10,000 pF values are preferred for calibration.

Attach the known-value capacitor to the input terminals. Apply power, and switch from A to C with SW1. The display will read some value. Adjust R43 until 1,000 pF ± 15 pF is shown. This completes step one.

The next calibration sequence will zero out the stray capacity. Adjust trimmer capacitor C1 for minimum capacity. With no capacitor connected to the unit, switch from A to C. Some number will show on the display (999992 on test unit). This represents the preset number loaded into the counter plus the stray capacity. This value must be zeroed out, so small capacitor values can be measured. Zeroing the stray is accomplished by adjusting the trimmer C1 until the meter reads zero when switching from A to C.

Upon completion of zeroing out the stray value, return to the 1,000 pF capacitor and readjust if necessary to bring the unit into calibration.

General

A digital display can produce some distracting observations. As an example, measuring a 5,000 pF (.005 uF) capacitor may produce a reading of 5040 pF one time and 4995 the next time. Remember, even though that appears to be a large value, it represents a ±0.9% accuracy. Since the majority of capacitors are ±20%, this unit allows measurement of those unmarked capacitors sufficiently accurate for most applications.

Two last comments concern the constant current source. The accuracy of this type of capacity meter depends on the constant current source. Improvement in this area will improve overall performance. Secondly, any capacitor that is "leaky" will give a reading that is not representative of its true value.■

W2NSD/1 NEVER SAY DIE

editorial by Wayne Green

from page 113

these days, having proven his theories rather spectacularly. Spots mean better DX, so the DX brethren are up to here in countries. They can't stop worrying about WARC and the coming 1979 ITU plenipotentiary conference which has the power to completely delete all amateur frequency allocations.

Where we actually stand as far as gaining, holding, or losing frequencies goes is more of a matter of belief than one of certainty, since no one can know for sure which way the critical African 44-vote black bloc will go. That's the bunch which wiped out our 237,000 MHz of satellite microwave channels in 1971. Oddly enough, time has not seemed to increase their enthusiasm for giving up what they consider their frequencies for a white man's hobby.

The ARRL complacency is reassuring to many amateurs. A reading of the report in *QST* of what happened in 1971 when the ARRL went to the ITU at Geneva to preserve our ham satellite frequencies and lost virtually everything might dispell some of that complacency. Well, since it is now far too late to do anything about it, why fret more. Let's just wait and see. If we come out okay, we saved a lot of needless worry. If we lose our shirts, then we can indulge in an orgy of recriminations. I'm not sure how the League will work things around to put the blame on me, but they managed it with "incentive licensing," so I have a profound respect for their ability to rewrite history and get gullible amateurs to buy it.

Rather than spend a lot of time on WARC, I see the ARRL tied up with a whole rash of petty squabbling. Their persecution of Mary Lewis and their dedication to preventing her from being the first woman ARRL director has resulted in a lawsuit. Their insurance scheme has come a cropper and must be taking a lot of time to hassle. Then there is a suit pending with Al Ogden, challenging the ARRL to put up or shut up on keeping Technicians from holding office in the League. The ARRL Foundation mess is coming apart, despite heroic efforts to cover up the situation . . . which is tied in with the almost total inaction on solving the real WARC problems.

Recent efforts to try to scuttle the Canadian Amateur Radio Federation have been tying up many HQ staffers. CARF seems to be weathering the battle rather well and we see more and more Canadians resisting the carpetbaggers from south of their border. They still have time to harass hams who write in with a beef. One recent sample was Terry Staudt, who wrote to Baldwin with a complaint and for his trouble found Baldwin trying to get him fired rather than answer his complaints.

ARMA (the Amateur Radio Manufacturer's Association) members got uptight over the ARRL Code of Ethics. They didn't object to the concept, only the jamming of it down their throats. They called Baldwin on the carpet and demanded some explanation for the *QST* editorial claiming heavy industry support for the scheme. Baldwin, according to the industry people I've talked with, came out a liar in their estimation. He was totally unable to back up his editorial with facts. The industry is further very upset over the new ARRL push to set the prices to be charged for ham gear and to force manufacturers to have a sample unit tested in the ARRL labs before it can be advertised in *QST*. It's the arrogance that really gets to the industry people.

If the League would spend a fraction of the time they invest in petty harassing of hams who are critical of them and in making life difficult for the industry, they would have plenty of time to attend to the more important matters such as WARC, and I don't mean the relatively insignificant WARC meetings in Washington. The votes of the other 153 countries are going to determine what amateur radio is like in the 80s, not what happens in Washington.

ARMA members were astounded when Noel Eaton (ARRL-IARU) reported to them in Atlanta this year that nothing whatever had been done or was in prospect to approach the 44-vote African black bloc to try to get their support for amateur radio at WARC. It appears that the whole future of amateur radio is being left entirely to chance. Good luck.

ARRL BUSINESS

If the ARRL isn't busy trying to cope with the WARC situation, then what are they doing . . . besides trying to cut expenses by firing people? Oh, they're busy with a multitude of problems . . . such as the insurance program which seems to be giving them more and more troubles. They may really be in the soup on that one. Then there is the project to try to stop Mary Lewis from getting to be the first woman ARRL director . . . this seems to be getting into court. The incumbent, Thurston, has been a terrific yes-man, so he would be a serious loss to HQ, particularly since Mary is the kind of person who does not knuckle under easily . . . as they've found. Another big time waster is the HQ battle to prevent a Technician class ham from getting elected as a vice director. Al Ogden, a Technician, is challenging this bias in a court case. Then there is Terry Staudt, a ham who had the gall to write Baldwin with a beef and who, for his trouble, found the League trying to get his employers to fire him! And, despite monumental efforts to cover it up, the mess with the ARRL Foundation just won't die. Ask your director about some of these incidents the next time he comes to your club . . . and let me know what he says.

With ARMA in disarray after their African plan was destroyed, the League is back to business as usual. ARMA has been trying to come up with some ideas on other things they might do which would attract members, such as working up a ham industry exhibit for use at trade shows, but this seems to be leaving the smaller firms cold since they would get little benefit from it. ARMA, having no paid staff, has to depend on volunteer time from industry people. In general, this is in very short supply, for most industry leaders are already spread thin trying to keep up with their own work. The lack of any significant benefits to firms supporting ARMA has kept down paid memberships, thus making it impossible to have a paid staff. Until ARMA comes up with a convincing goal which will benefit the entire industry, it is going to have tough sledding and be a sitting duck for ARRL pot-shotting.

COWAN PROMISES

On page 1 of the October, 1976, issue of *CQ*, Dick Cowan said, ". . .*CQ* has slipped badly in both circulation and advertising." He went on to say that this had happened because he was preoccupied with *S9* and other more profitable publishing ventures. He points out that "it would be very expensive and time-consuming to rebuild it." Next he says he has the money, the manpower, and the know-how to rebuild *CQ*, and, by God, he intends to do just that.

Okay, here we are two years down the pike. All that money, manpower, and know-how have resulted in a magazine that is hardly different from two years ago, running about six or eight articles an issue (like *Ham Radio Horizons*). There has been no noticeable change except for a slight increase in advertising, and that is due primarily to the yeoman efforts of Jack Gutzeit.

Far from being first, as promised, *CQ* is running neck and neck with *Ham Radio Horizons* for last place . . . getting ads out of sympathy more than performance. This sympathy can be costly. One advertiser complained to me that he had run an ad and been incredulous at the reader service response. He was had, he felt, for sending out catalogs costing him nearly $1,000 and the results were virtually nil. Would he re-run his ad for half price? No way!

The secret to having a good magazine is no secret at all. You pay authors well and you pay them promptly, not after they have to sue you for payment. This will bring you the cream of the crop. It will also bring you plenty of readers who will respond by buying from your advertisers. You really have to share the money with the authors, not take it all and put it into trains and yachts.

There is no real secret to putting out a good magazine and getting hams to read it. You have to give good value . . . interesting articles and lots of 'em. To get these, you must pay money . . . funny how a quick check for an article seems to motivate people.

EXCITING THE FCC

The latest catalog from Henshaw's, 7622 Wornall, Kansas City MO 64114, should get some people at the FCC in an uproar. They have three stores, the others in Independence and Ft. Worth, and they are *not* ham stores. The catalog is strictly CB, but with two items marked as being for amateurs. These are items you won't find in a ham store catalog. There on the back cover you'll find an ad for an "amateur" CW transmitter. It says, "Illegal to modify for use as a CB linear." This gem is a 125-Watt CB linear disguised as a 10m ham transmitter. As long as I see ads like that right out in front of the CBers, I have

no confidence that the FCC has any intention of making their CB and ham linear rules stick. Oh, ham dealers selling amplifiers which cover 10m to hams will get the full treatment from the FCC, but CB dealers selling CB linears under the most transparent of covers will be ignored by the FCC.

The other gem from Henshaw's is a 10.5-GHz police radar jammer which is called an "amateur transmitter." The ad goes on to say that, "This may be illegal to use as a police radar jammer." This $400 gadget can be set to indicate speeds of 20, 30, 40, 55, or 60 mph on police radar. Here we go again!

SPEAKING OF 10.5 GHZ

When Microwave Associates came out with their cute little 10 GHz units a couple of years ago, I got quite interested and urged our then editor to get a couple and play with them. He did and wrote them up, but didn't ever offer to let me in on the fun. Then, when he left, the 10 GHz stuff left with him, so I missed out completely.

Well, almost completely. Chuck WA1KPS of Tufts Electronics recently got a pair of the units and added the i-f strips which turn them into transceivers. Since I have one of the more accessible mountains just up the street (actually, the mountain had a lot to do with my picking this location when we moved up here 16 years ago), Chuck got one of the transceiver units into my hands for some tests. The first test was between Pack Monadnock (NH) and Blue Hill (MA).

I had it easy, having only to pack the 10 GHz rig and a couple of HTs in the *73* van and head up the road. The road goes right to the very top. I then climbed up into the fire tower and set up my system, coordinating it on 223.5 MHz simplex. Chuck had a more difficult time, having to carry everything up from a parking lot to the top of his mountain, a 20-minute hike. It was worth the trouble, for the signals came through full quieting over the 58-mile path.

All is not beer and skittles for the pioneer. I forgot to bring gloves and the wind was icy cold up there in the framework of the fire tower, so I about got frostbite. It was worth it once we got the two rigs tuned to each other. This is no simple matter when your hands are cold and the wind is blowing you around.

As I was driving back down the mountain, fired with the enthusiasm of success, I got to thinking about Pack Monadnock. I've spent many a night on that mountain working far-off repeaters . . . particularly back about ten years ago when there weren't so many of them. From that location I had no problem working repeaters in Maine, Vermont, Massachusetts, and even down into Connecticut. I couldn't quite make any Rhode Island repeaters except under better than average conditions. Why not see what DX we could work on 10.5 GHz?

Chuck is a sucker for anything to do with amateur radio, so a few days later he was taking a day off from the store and heading for Mt. Ascutney in Vermont (they have a splendid 76 repeater on Ascutney). Again I pooped on up the Pack and coordinated via first 2m, then 223.5 MHz until we made the contact on 10.5! Again Chuck had quite a hike to the top, carrying the 10.5 rig plus his HTs. It was even colder than the previous contact and it took about 15 minutes before we finally got everything tuned up right and had full quieting clean signals. We were afraid for a while that we might not make it. The distance was only 52 miles, but it was over some very rough terrain.

Well, the day was still early, so why not drive on over to Maine and up to the top of Mt. Agamenticus, near Ogunquit. Chuck climbed back down Ascutney, packed everything in his van, and drove clear across New Hampshire and to the top of Agamenticus. This was a 68.5-mile hop, so it would be stretching the ability of the tiny rigs. We were using them barefoot, with only the little horn antenna which Microwave Associates furnishes.

By late afternoon, Chuck was on top of Agamenticus and I was back up on the fire tower on the Pack, listening carefully and aiming the rig at where I thought his mountain should be. Once Chuck heard me calling and tuned me in, I was able to aim the rig a bit better and peak the signals to perhaps an S-7. Hmmm, that made three states on 10.5 GHz. Not a record, but not bad.

A couple days later, Chuck was off to Rhode Island for another try. This time we were looking at a 69-mile path, but with some formidable mountains right along the route. Chuck first had to get permission to climb the tower on the hill (there are no mountains in Rhode Island). This turned out to be a production in itself. Then, when he got there, he had to climb the hill, which took on the proportions of a mountain. Next he had to climb the cement base of one leg of the tower and work his way up the tower framework until he got to the ladder at the 20-foot level. From there it was a bit easier, climbing the wet and very cold tower in the wind, holding on to the rig with one hand, pockets bulging with the HTs, and holding on very, very tight with the other all the way up to the 150-foot level.

While Chuck was trying to aim the rig and not fall off the tower, his fingers gradually freezing in spite of his gloves, I was getting cold clear through up on the Pack. I was, as usual, inadequately dressed and without gloves. The wind was cold and brisk, and the entire top of the mountain was engulfed in a thick cloud. We tried to get through, but even the 223.5 HTs were not doing very well. We were doomed by the clouds, if not by anything else. Those 10.5 GHz signals drop dead in clouds or even in rain, so we really didn't expect to make it. We didn't.

Chuck has been going over the maps looking for a hill in Connecticut which might have a good line-of-sight path to the Pack. The fire warden on the Pack says you can see Ragged Mountain in Connecticut on a clear day, so perhaps we'll make it.

Oddly enough, we had not yet worked New Hampshire, so one recent Sunday Chuck packed everything into his van and headed up here. After visiting the Pack to see how visible some of the mountains were up north, he headed for Mt. Washington. There was no time to lose since the road to the top would be closing the next day for the winter. The auto-road people warned that the top of the mountain was in a cloud with 250-foot visibility. Well, perhaps it would blow off and we'd make it.

After allowing Chuck enough time to reach Mt. Washington (6,288 feet, the highest point in New England), I called him on the Mt. Washington repeater on 67. He was stuck at the base, waiting out a long line of cars waiting to pay the $7.50 toll. I'd had to wait almost a half hour to get up the Pack, this being a Sunday at the peak of the fall foliage.

Eventually, he got through the toll gate and made it to the top of the mountain. It was still socked in, so I had little hope for a contact. We had measured the path on the map and it was 106 miles, which seemed a lot for the tiny rigs. We set up anyway, with me in gloves and a heavy jacket for a change. I was only braving temperatures in the 40s, while Chuck had 15° and a 40 mph wind. We tried to get through until frostbite started to set in on Washington. The top of the mountain was iced over with rime ice and the clouds were still heavy.

After the three and a half hour drive, a half hour wait in line, and the long drive to the top, plus the fact that this would be the last chance to try the path until next summer, Chuck was not about to give up without one more try. He set up in the parking lot, maybe a couple hundred feet down from the top, and we worked at it. The clouds parted for a moment and there it was . . . "W2NSD, this is WA1KPS." I acknowledged it and we had a contact. It's funny, but you can hear your own voice coming through the system when you have a contact. This was a weak one and didn't last but a couple of minutes before the clouds were in again and it was lost. I could always tell just how well Chuck was tuning in my signal by how clearly I could hear my voice coming back.

Next spring, when we see a particularly clear day in prospect, perhaps we will again head for the mountains. I measure 150 miles between Mt. Greylock in Massachusetts and Mt. Washington. I'll bet we can make it. In the meanwhile, you can be sure that we'll be working on Connecticut and Rhode Island. The very eastern edge of New York might just be reachable, too. Who's worked seven states on 10.5 GHz?

SOME NEVER LEARN DEPARTMENT

While on the one hand many amateurs are trying to get the FCC to live up to its promise to deregulate amateur radio, on the other a few amateurs are trying to tie us up again with more rules. I seriously doubt if any of the amateurs who went through the FCC repeater rules screw-up are in any way involved with the present move to try again for repeater regulation by the Commission.

The sooner amateur groups stop trying to solve their problems by getting more rules from the FCC and tackle their problems directly, the more we will be in control of our future. What amateurs who are pushing for more regulations are saying is that they don't want to either take the time or make the effort it requires to solve their problems.

Yes, I am all too familiar with the repeater situation where any amateur can set up a repeater and mess things up for hundreds of others. I also know there are some reasonable solutions to this problem for those who tackle the situation with determination.

The first step is for the local repeater council to decide what has to be done. If there is an uncoordinated repeater in the area, get the other repeater

Continued on page 254

James Wyma WA7DPX
513 W. 10th St.
Casa Grande AZ 85222

Fail-Safe

—protecting repeater batteries

Most repeater owners want to have a battery on the repeater so that the system will continue to function during a power failure. But the problem is, how do you keep the battery charged up so it will work when you need it?

The following circuit came about as the result of a need for a battery charging circuit for our .37/.97 repeater in Casa Grande, Arizona. The following capabilities were needed on the charger:

1. Normal charging — turn charger on at approximately 12.5 V and off at approximately 15 V.

2. Low-voltage fail-safe in the event of charger failure, approximately 11.5 V.

3. Overvoltage fail-safe in the event of malfunction in charger turn-off sensing, approximately 15.5 V.

4. Battery connected to 110 V ac line only during charging period.

The obvious question that comes to mind is, "Why not just float the battery?" In my experiences as a two-way service technician, I have found that the majority of lightning-caused damage is because of lightning hits on the commercial power line. With this in mind, it was figured that the probability of damage would be greatly reduced if the battery were only hooked to the charger for the 2 to 3 hours per week when it was charging. If you don't expect to ever get hit with lightning at your site or if you like to gamble, then skip this article and jump over to the next one. However, if you are a natural pessimist like myself, read on. (Remember Murphy's Laws: If it can possibly go wrong, it will. If it is impossible for anything to fail, it still will.) Another reason for using the type of charging described here is one of battery life. A battery that is on a continual float is likely to go bad much faster than one that is charged and recharged on a regular basis. The following circuit contains all of the features previously described.

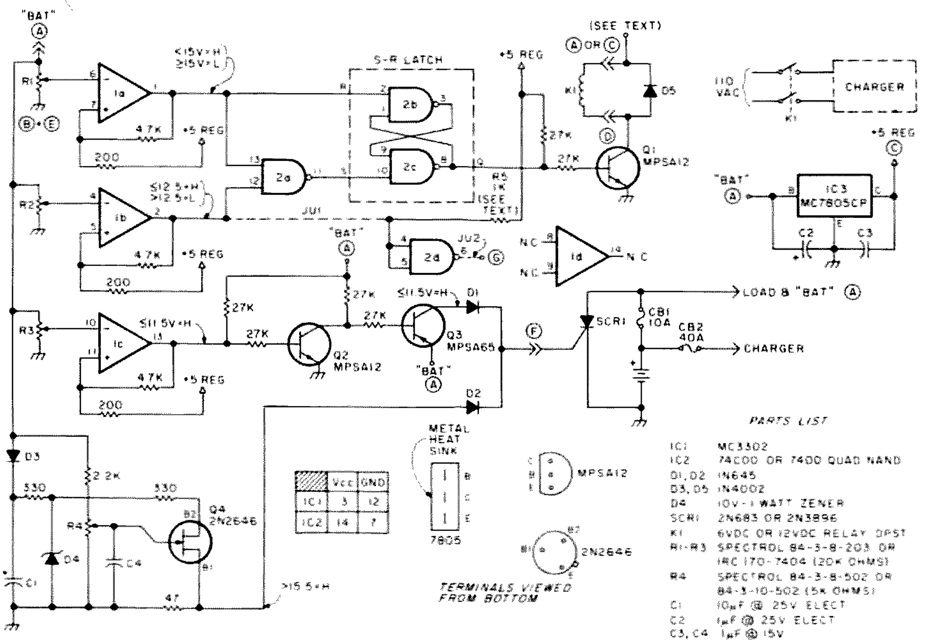

PARTS LIST

IC1	MC3302
IC2	74C00 OR 7400 QUAD NAND
D1, D2	1N645
D3, D5	1N4002
D4	10V-1 WATT ZENER
SCR1	2N683 OR 2N3896
K1	6VDC OR 12VDC RELAY DPST
R1-R3	SPECTROL 84-3-8-203 OR IRC 170-7404 (20K OHMS)
R4	SPECTROL 84-3-8-502 OR 84-3-10-502 (5K OHMS)
C1	10μF @ 25V ELECT
C2	1μF @ 25V ELECT
C3, C4	1μF @ 15V

Fig. 1. All fixed resistors are ¼-Watt, 10%. The PC board mates with a 15-pin edge connector.

Circuit

The circuits for sensing charger turn-on, charger turn-off, and low-voltage disconnect make use of three sections of a Motorola MC3302 quad voltage comparator. This device provides a TTL-compatible output that is at a high stage when the inverting input is below the reference voltage (on the noninverting input). When the voltage on the inverting input is equal to or higher than the reference voltage, the output switches to a low state. The reference voltage is supplied by an MC7805CP regulator chip. Potentiom-

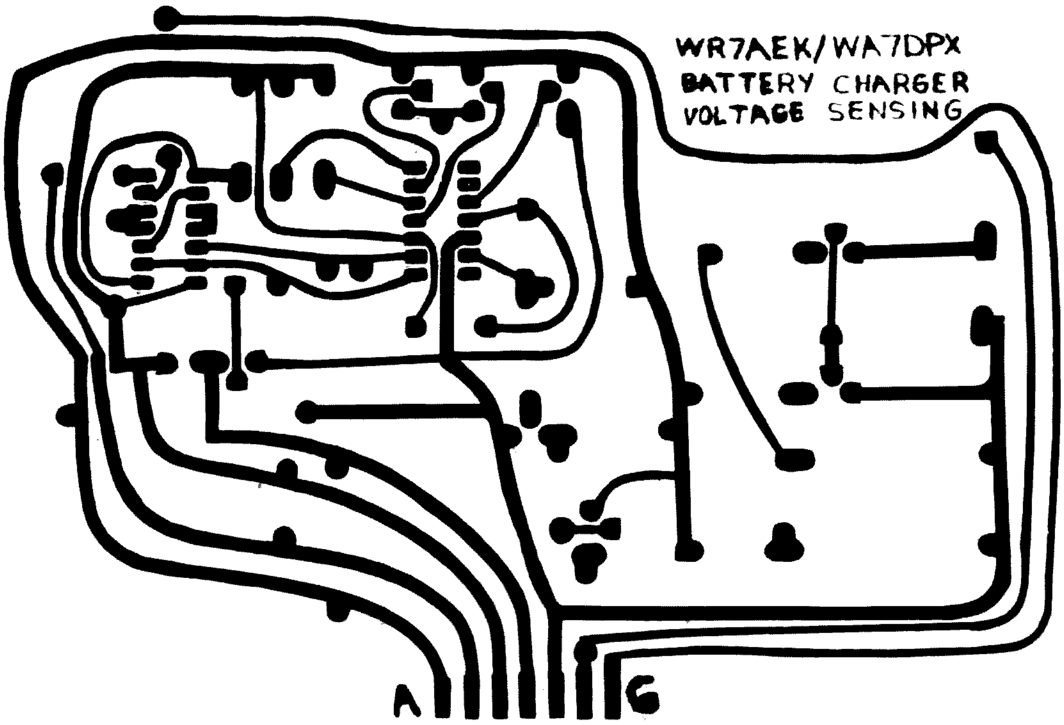

Fig. 2. PC board.

eters R1 and R2 are used to set the switching levels for the voltage comparators. (Both pots act as voltage dividers across the battery voltage.) (See Fig. 1.)

The output of the comparators (1A and 1B) are hooked to a NAND gate (1/4 of a 7400 IC section, 2A) which drives two more sections of the 7400 chip (2B and 2C). Sections 2B and 2C are hooked in what is called a set-reset latch configuration (abbreviated S-R latch). The device is effectively an on-off switch (an electronic latching relay, if you will).

When a low is applied to the set (S) input, the output (Q) goes high and stays high. The Q output will stay high even though the low on the S-input is removed. To "turn off" the latch, a low is applied to the reset (R) input. The output will stay low even though the low on the S-input is removed. The Q-output drives an MPS-A12 Darlington amplifier transistor (Q1) which acts as a relay driver.

Because of the extremely high gain of the MPS-A12 (H_{FE} = 20,000), the device works very well at TTL levels. The device is capable of switching a 500 mA load. Q1 drives relay K1 which is used to switch the 110 V ac line to the battery charger. A relay with a good gap between the normally-open contacts should be used so that line surges (i.e., lightning hits) will not jump across the gap.

Let's look at the action of the circuit during a typical discharge and recharge cycle. The logic states for the output switching points are shown on the schematic to make it easier to follow. Starting at a full charge, both outputs (pins 1 and 2 of IC1) are low; hence K1 is turned off (the S-R latch is reset by the low on the R-input (pin 2, IC2). As the voltage drops below 15 V, output pin 1 switches high, placing a high on one input of NAND gate 2A (pin 13). Input 2 of IC2 is still low, since the voltage is still over 12.5 V. When the voltage drops below 12.5 V, IC1B output (pin 2) switches high. We now have both gates of NAND gate IC2A high. This causes its output (pin 11) to go low. This low makes the S-R latch output (Q) go high, turning on Q1, which pulls in K1. K1 turns on the charger. As the battery charges, the output of IC1B goes low when the voltages go over 12.5 V. The battery will continue to charge until it reaches 15 volts. At this point, IC1A output will go low. When this happens, the S-R latch is turned off by the low on the R-input (pin 2, IC2B). Q goes low, which turns off K1 and disconnects the charger.

The remaining two sections of the circuit (IC1C and Q4) are the low-voltage and overvoltage protection fail-safe circuits. The circuits are referred to as fail-safe because a failure that actuates either circuit will result in the battery being disconnected from all circuits, and the charger will be disconnected from the ac line. This results in a "safe" condition where the battery cannot be damaged by excessive discharge or overcharge. Either of these conditions is a major fault that requires technical attention. Consequently, a nonreversible disconnect (blowing circuit breaker CB1, which must be manually reset) was chosen to accomplish the job.

The low-voltage section of the circuit uses the third section of IC1 as the sensing element. Operation is the same as IC1, A and B. When the voltage goes below 11.5 V, the output of IC1C goes high through D1 to the gate of SCR1. The high on the gate causes SCR1 to fire, placing a short across the circuit breaker and battery, which, of course, causes the circuit breaker to open. Since the coil of K1 is actuated by the battery voltage, the relay cannot pull in to connect the charger to the 110 V ac line.

The remaining section is

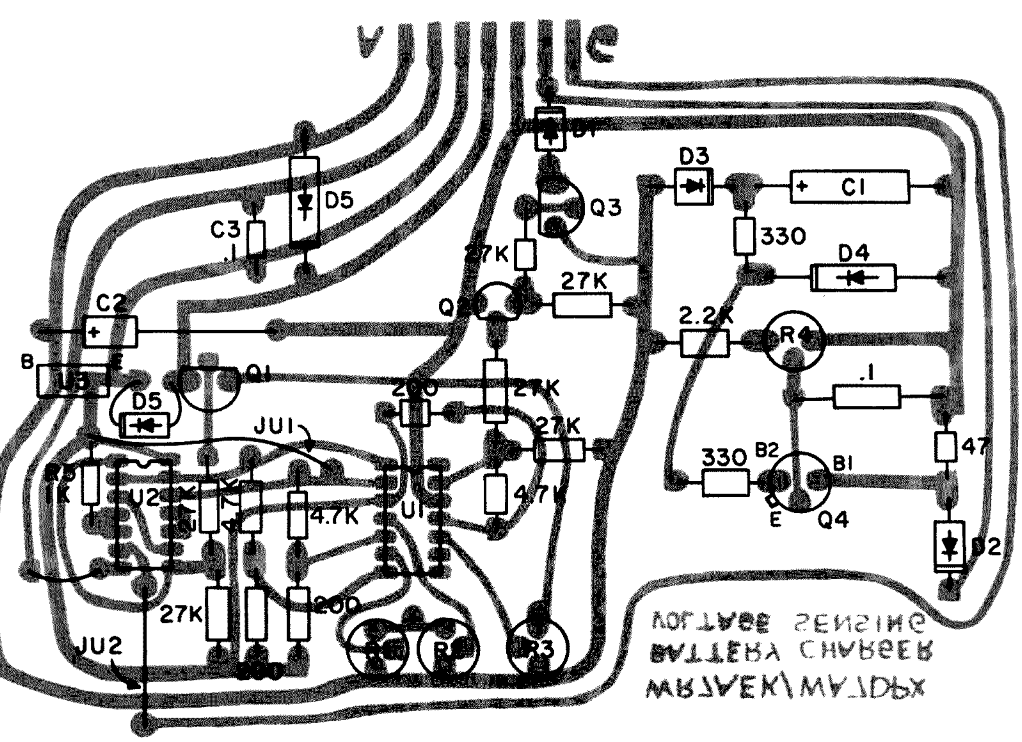

Fig. 3. Component layout.

the overvoltage protection circuitry. This is a conventional "crowbar" circuit. D3 and C1 act to suppress negative transients which might trigger the circuit. When the voltage exceeds 15.5 V, the gate of the UJT (Q4) fires, causing a positive pulse to be generated at base one of Q4. The pulse is coupled through D2 to the gate of SCR1, which blows the circuit breaker as previously described.

Output G is an optional output used to drive a tone generator. The purpose of this option is to place a tone on the repeater transmitter to indicate that the battery is below 12.5 volts and is not getting charged. This warning will give you time to correct the problem before the battery drops to 11.5 V and is shut off by the low-voltage protection circuit. Fig. 4 shows an example of an oscillator that could be used for this option. If you want to use this feature, jumpers JU1 and JU2 should be installed and resistor R5 omitted. If the option is not used, jumpers JU1 and JU2 should be left out and R5 installed. Do not install the jumpers and the resistor, as damage could result to the comparator IC.

Circuit Adjustments

The voltage levels stated were found to be correct for the battery we were using (a 200 Ah battery). However, you should check your specific battery to determine the limits you want to set. The main voltage to watch is the "full-charge" turn-off. The logical thing to assume is that, when the battery hits 13.8 V, it is fully charged. That's wrong! The battery must be brought to a point above that for it to take a full charge.

The best way to determine this voltage is to discharge your battery. Run it down to about 12.5 volts. This should show a "high red" area on your hydrometer. Now charge the battery at the rate you intend to use in your system. Take regular hydrometer readings until the battery shows in the "green" on the float. Check the voltage at this point. This is your full-charge turn-off voltage. When the charger is disconnected, you should read approximately 13.8 V with no load on the battery. The other voltage levels stated should be adequate to prevent damage to the battery.

The easiest way to set up the voltage comparators is with a variable voltage power supply connected to the "BAT" terminal (pin A) of the circuit. Connect a VOM (12 V dc scale) to pin 1 of IC1. Set the power supply for 15 volts. Adjust R1 until the voltage on the VOM changes from high to low (approximately 5 V to less than .5 V). Drop the voltage to about 14 V dc. Run the voltage back up to 15 V. Make fine adjustments on R1 until the output switches to a low at exactly 15 V. There will be a very distinct switch from high to low at the output switching points.

Move the VOM to pin 2 of IC1. Repeat the procedure, but set R2 for a switching point of 12.5 V dc. Repeat this again using IC1 pin 13 and 11.5 V dc. (Disconnect the gate of SCR1 to prevent it from firing.) Adjust R3. The remaining adjustment is on the overvoltage circuits. Connect the VOM (3 V scale) to D2 cathode. Adjust R4 for a voltage increase (to approximately 1 volt) at 15.5 volts. Run the voltage back and forth a few times to check the setting. The firing voltage should be a very distinct point. Reconnect the gate of SCR1.

After making all adjustments, give the circuit a final smoke test. Start at 15 V. The relay (K1) should be unenergized. Increase to 16 V. The circuit breaker should open. Drop to 15 V. Kill the power and reset the breaker. Drop the voltage slowly. At 12.5 V, K1 should pull in. Run the voltage back up. At 15 V, K1 should open. Drop the voltage down to 11.5 V. At this point, the circuit

breaker should open and K1 should open. Be sure your power supply has enough current to blow the circuit breaker.

Construction

The value for CB1 should be chosen to meet the requirements of your particular station. The SCR listed is sufficient to handle at least a 25 Amp breaker. If a fuse is used instead of a breaker, a smaller SCR could probably be used. Be sure to tie all unused inputs of IC2 to +5 V through a 1k resistor. It is recommended that a 74C00 CMOS chip be used for IC2 because of the higher immunity to falsing that it has as compared to the 7400. The extra 15¢ for the CMOS chip shouldn't kill you unless you plan to make two or three gross of these circuits. All other areas of construction should be pretty straightforward. The circuit can be built on a PC board (see Fig. 2) or perfboard, whichever suits your needs.

The printed circuit board was set up so that either a 12 V dc or 6 V dc relay could be used for K1. If a 12 V dc relay is used, diode D5 should be installed with the cathode connected to the 12 V line or battery (base of U3). If a 6 V dc relay is used, the cathode of D5 should be connected to the regulated 5 V dc line (E of U3). The high side of the relay coil would be connected to +12 V dc (pin A of card) or +5 V dc (pin C of card) as required. Do not omit diode D5. This diode is used to suppress the counter EMF developed when K1 is turned off. The low side of the relay and the anode of D5 are always connected to pin D of the card.

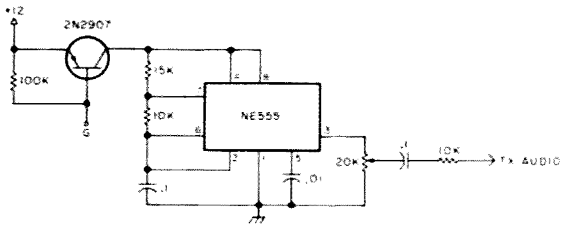

Fig. 4.

Fig. 2 is a full-size drawing of the PC board. Fig. 3 shows the parts layout for the PC board.

Parts can be obtained from a number of the advertisers in *73*. However, to save you time and probably money, arrangements have been made with Tri-Tek, Inc., to provide all of the parts (including PC board) in a kit form. You can, of course, order the entire kit or just the parts you need. The entire kit can be ordered by asking for a "WR7AEK battery charger kit." (This doesn't include board or parts for the oscillator option.) The entire kit costs $24.00. (It includes SCR1, but not CB1 or the edge connector.) The PC board alone is $8.00.

I have made every effort to make the text and schematics as complete as possible. If you have a problem with the circuit that I can help you with, drop me a letter. I will make every effort possible to answer your questions (SASE, please). ■

New Products

from page 204

W6TOG RECEIVER MODIFICATION KIT

It wasn't until I began using a new FT-901DM that I finally concluded that my trusty FT-101B could stand some improvement in the receive mode. With the two rigs tuned to the same signal, and the antenna switched back and forth between them, it became quite apparent that the FT-901DM was much livelier. I was also able to copy weak signals very close to extremely loud signals that all too often were impossible to pull out with the FT-101B. Happily, as I was pondering the situation and wondering what might be done to punch up the older rig's performance, one of the W6TOG FT-101 series receiver modification kits arrived in the mail from S-F Amateur Radio Services.

My long-standing reluctance to go mucking about in the densely-packed solid-state innards of modern rigs was quickly overcome by the discovery that only four small components and three simple steps were involved in the modification. The fact that things can be quickly and easily restored to their original state was also reassuring.

According to the instruction sheet, the purpose of the modification is to "improve the receiver sensitivity and help eliminate receiver blocking due to local signals." That sounded exactly like what I was looking for, so, taking screwdriver and soldering iron in hand, I proceeded to install the modification kit in my FT-101B.

The installation procedure is quite simple. You locate the receiver rf board, remove it, find the rf amplifier transistor (Q1), and replace it with one of the transistors from the modification kit. Then you locate foil track 8 on the board and solder one end of the pair of back-to-back diodes supplied with the kit to the track. The other end of the diode pair is soldered to foil track 7. The rf board is then plugged back into the unit and the high frequency i-f board is removed. Find the receiver second mixer transistor (Q2) and replace it with the remaining transistor from the kit. Replace the board in the transceiver and the modification is complete. The entire process is quite straightforward and takes only a few minutes.

In some instances, you may find that after making the modification you will have to repeak the receiver section. If you do, be sure to carefully follow the instructions in the alignment section of your owner's manual. The time spent properly tweaking things up will be amply rewarded later by improved performance.

The installation of the W6TOG receiver modification kit has clearly improved the performance of my FT-101B. It's livelier than ever before, and I'm now able to copy signals that would have been very difficult, if not outright impossible, to pull out of the crud in the past. The decision as to whether or not you should make this modification to your own rig is one you will have to make for yourself, and depends largely on the sort of operating you do and the conditions you are confronted with when on the air. To help you decide, you may want to write to S-F Amateur Radio Services for a copy of the combination information sheet and order form.

In addition to the FT-101 series, there are receiver modification kits available for the FR-101 series, TS-520, TS-520S and TS-820/820S. There is also the "MAGICOM" processor modification kit which converts the TS-820 speech processor from an rf compressor to an rf clipper.

W6TOG receiver modification kit prices are: TS-520, $27.50; TS-520S, $32.50; TS-820/820S, $34.50; FT-101 series, $32.50; FR-101 series, $34.50. The "MAGICOM" processor modification kit for the TS-820 is $27.50. All prices are postpaid from *S-F Amateur Radio Services, 4384 Keystone Avenue, Culver City CA 90230; (213)-837-4870.* Reader Service number S33.

Morgan W. Godwin **W4WFL**
Peterborough **NH**

S-F RADIO DESK

I used to set up my first rig on a small folding card table each time I wanted to operate, and then disconnect everything and put it away in a cupboard when I had finished. Since then I have used quite a variety of objects to hold my equipment and serve as an operating position, including an old rolltop desk, a kitchen table, a garage workbench, basement storage shelves, and a bookcase. For the past year I have been using

Continued on page 262

W2NSD/1 NEVER SAY DIE

editorial by Wayne Green

from page 248

groups to cooperate toward getting it off the air. You can't tell me that an uncoordinated repeater can stick it out when several hundred local hams decide that it should not be on the air. There should be no problem at all working up teams of amateurs to drive the scoundrel off the band. Hundreds of tape-recorded messages played through the offending repeater demanding that it be taken off the air might encourage it to be shut down. Visits to the owner of the repeater by rather large groups of determined hams might also get the idea through.

There are a great many ways of tackling the situation, and the inability to cope with it is an admission that the repeater owner is smarter than your group. Let's use brains instead of trying to get the government into the act. Remember that once you get the FCC moving, you will have one hell of a job stopping them. The FCC invariably overreacts to things like this. It's the way government works. Don't mess with it.

If repeater councils feel they are not mentally equipped to cope with some of the local repeater owners, perhaps they should get together with other nearby councils and try to locate someone in the group with some ideas. There are always a lot of ways of tackling problems . . . if you have a creative thinker handy.

YOU MISSED BOXBOROUGH

Despite a heavy all-day rain (or perhaps because of it), exhibitors at the ARRL convention at Boxborough (Massachusetts) set all-time records for equipment sales. Many were delightedly reporting double and triple the sales of Dayton, previously the top hamfest for cash sales.

One reason for the tremendous sale of ham gear was the recent price increases. Dealers at the convention had bought at the old prices and were selling at discounts off the old prices, so hams found themselves in a wonderland of fantastic prices. They reacted by buying everything in sight. DSI was there with their new counters and sold out completely on Saturday. By Sunday morning they had a new stock, flown in overnight.

The New England ARRL Convention is an odd one in many ways. For many years it was run at the old Swampscott Ocean House. Then one year the hotel burned to the ground just a month before the convention and the event had to be moved to Boston. This was not a popular move, considering Boston hotel and parking prices. They tried Cape Cod one year and found that Greater Boston hams were not about to drive that far for a convention. The new convention complex on Route 495 (the Boston outside perimeter road), the Sheraton hotel at Boxborough, is a fine location and met with ham approval. It is estimated that well over 5,000 turned out.

I say estimated because security is not lax at this show—it doesn't exist. If you want to buy a ticket and have a chance at the multitude of prizes, so be it. They had 3,500 tickets available and ran out of those early in the first day. Tickets were generally bought just by the ham of the family, with the rest tagging along at no charge.

Most of the planning for the show was done by Gene Hastings W1VRK, an old-timer at this event. Exhibitors had some gripes . . . such as paying $300 for a booth with one table and one chair, extra chairs available for $20 each from the show decorator . . . only to find themselves facing flea marketers in the exhibit hall who had bought a table and two chairs for $4. Even worse, some of the fleas hung up their business signs and went right into selling commercially.

The flea market, which was a wet mess on Saturday, perked up on Sunday, but to thinner crowds. It was well managed by Jack W1QXX, the keeper of the antennas and large power behind the yearly VHF contest effort from Pack Monadnock in New Hampshire. Jack will also be found wherever there is a ham auction, a tradition going back as far as I can remember . . . when there is an auction, Jack is the auctioneer. He takes these things seriously and got into a big battle with an itinerant badge maker who tried to set up in his flea market in competition with the one who paid for a booth inside and had an exclusive agreement. This was finally settled when the inside badge maker ran completely out of badges. Only then would Jack let the flea market badger start grinding.

Despite a blanket prohibition of my being permitted to speak at ARRL conventions, Gene managed to get me on the program twice, once speaking about software for microcomputers and the other on the sore subject of WARC. I think he got the software talk through headquarters by not telling them I was going to do the talking. My name didn't appear on the program or on any posters in conjunction with that talk. I'll bet he had a battle with the other one. One year they wouldn't even let *73* buy a booth and exhibit at Boston!

Speaking of sore subjects, all of the dealers exhibiting at the show were absolutely furious about the HR special deal with the ARRL . . . apparently a sweetheart deal . . . where ARRL *Handbooks* were being sold across the counter for $4.25! This is 85¢ less than wholesale, so dealers were left with piles of *Handbooks* which they couldn't sell. The book regularly sells for $8.50, so HR was selling it at half price . . . wonder what they had to pay for it? Wonder what laws were broken with that secret deal?

Despite the few grumbles about the show, there is no doubt whatever that New England needs a yearly ham convention in the Greater Boston area. Finding the spot for it is the big problem. The Sheraton Boxborough was hopelessly overcrowded by the event. You couldn't get around on Saturday. The exhibit hall was filled with about 70 booths . . . perhaps 35 exhibitors. The restaurant couldn't cope with the people, not having brought in extra cooks or waitresses. They had lines an hour long and then ran out of food. Unfortunately, there are no fast food places within easy driving distance of the hotel.

On the good side, this Sheraton is one of the best of the chain. I've had such lousy rooms, service, and so many problems that I've been avoiding the Sheraton chain like the plague. I had breakfast there before the crowds arrived and their food is no better than elsewhere at Sheratons . . . very poor. But the decorations were gorgeous and they really tried hard to make sure that those with room reservations had rooms.

Perhaps if Gene would cut the banquet and use the banquet hall for more exhibits . . . ? And please, some sort of lounge for the exhibitors.

MORE TROUBLE BREWING

A newspaper clipping sent in by KA2CKV is enough to give us a bad case of hives. It has to do with a proposed city health code amendment which is in the works in New York City. This has to do with setting the levels for radio field strength for emitted radio waves.

If this beauty goes through, it will effectively throw most of the hams in New York off the air. Oh, hand transceivers might escape the impact, but most hams would have to have their antennas a minimum of 200 feet from anybody. In New York that kind of distance is pretty expensive to buy.

At least there is some fighting of the proposed amendment by TV broadcasters, since they would have to either drastically lower their transmitted power or else move their transmitters out of town. Either move would ruin television pictures for much of the city and be a godsend to cable television firms.

Until they outlaw irradiation by police radar units, who irradiate us with roughly 5,000 times more energy than is permitted to leak from microwave ovens, they should lay off amateurs. The problem comes from a worry about rf pollution. I love that use of the word "pollution," because it is ridiculous in this context—yet is a great emotional phrase for the uneducated. Who can be in favor of "pollution?"

The fact is that there have been no definitive tests as yet which indicate that radio waves cause harm. I've been around 'em for over 40 years now . . . but perhaps that would be a case to support strict control of radio transmissions. Perhaps I can point to my continual irradiation by signals from DX stations, repeaters, HTs, and such as a possible reason for the weird behavior of my children. We all need some excuse for that, right?

If New York gets this one through, will Los Angeles be far behind? Will Peterborough pass such a law and force me to move my antenna at least 200 feet from myself? There may be a big sale of 200-foot towers soon. Should we invest in a tower firm?

MORE ASSISTANCE

We are looking for a couple of hams who will, in exchange for a subscription to *73*, forward mail to us. We have a mailing list we rent out in the computer field, and we need to know when mail is delivered to it, how long it takes for the mail to arrive, and if the use of our list was authorized. All our

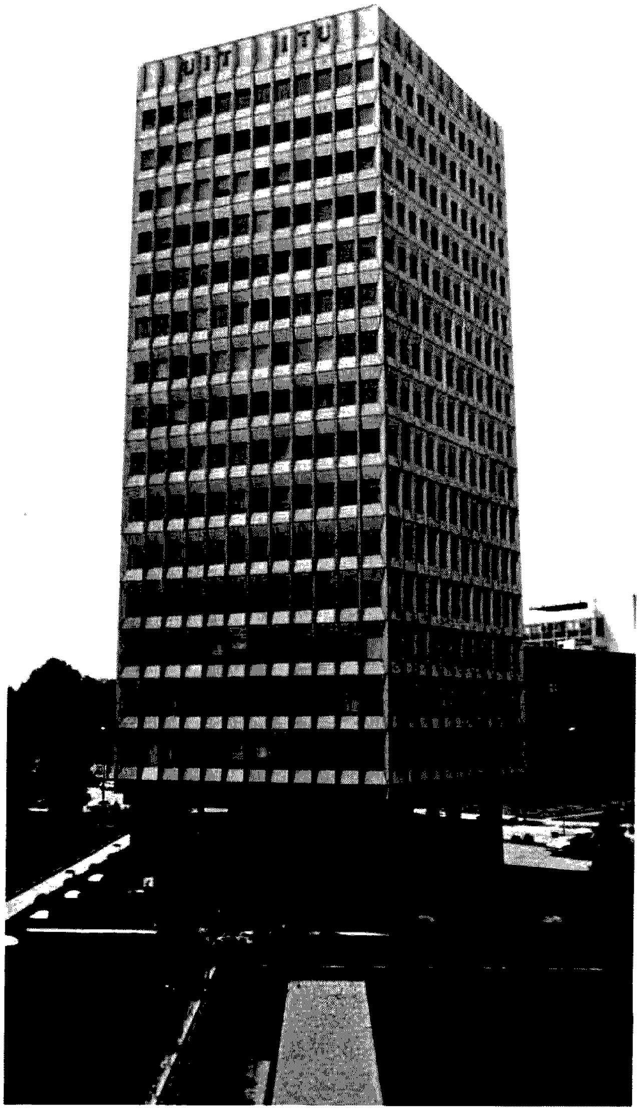

assistants have to do is date the receipt of mail and forward it immediately to us for our records.

4U1ITU

While visiting the ITU back in June to check on the prospects for survival of amateur band allocations, I paid a visit to the ham station In the ITU building in Geneva.

Here I am, on the left, with my very good friend Gerard de Buren HB9AW, who is the chief operator at 4U1ITU. We're in front of the ITU building, with my little rented Fiat reflected In the door glass.

This is the new ITU building, just a short distance from the older one, where 4U1ITU is still set up. If the African vote bloc has too much influence at the WARC meeting next October, will it destroy the whole ITU body of agreements which have been built up over the last hundred years?

I thought, if I didn't show you this picture, you wouldn't believe my report that one of the two (only two these days) stations set up at 4U1ITU is an old Collins system. While I have nothing in the world against using one of those lovely old rigs, still . . . for a station that is supposed to be used as a demonstration to delegates from all of the countries of the world, shouldn't something more technically modern be on display?

Just to the left of the Collins equipment is one of the new ARRL low-cost CW rigs for impoverished amateurs. This was designed as a solution to the problem of amateurs not being able to afford the average new sideband rig. While it is true that amateurs in many of the small countries are not able to afford a new Yaesu 901, the whole concept of individual communications is an anathema to the leaders of countries which are unstable, and that includes virtually every one of the 44-vote African bloc. These countries might be talked into the use of radio clubs, where operators could be supervised, but there is no way you are going to get very many individual amateur stations permitted. It is just far too dangerous because the stations could then easily be used for subversive communications. This is why the chaps at the ITU are laughing at the ARRL and their mini-rigs.

If you find yourself within driving distance of Geneva, stop in and say hello to all of the hams at the ITU . . . they are a great bunch and you'll enjoy the visit. Bring your license and get on the air from one of the smallest "countries" . . . 4U1ITU. Be sure to give my very best to Gerard.

DXPEDITIONING HINT

For those of you who would like to get a little taste of what it's like to be on the other end of the pileups, take a good look at the most interesting Eastern Airlines special fares. The chances are that you may be

Continued on page 277

Code-Practice Oscillators

—an exhaustive report

Hank Olson W6GXN
1751 Croner Ave.
Menlo Park CA 94025

From the earliest days of amateur radio, code-practice oscillators have been an integral part of the process of learning Morse code. To be sure, a great deal can be accomplished by copying off the air in terms of receiving practice, but, for group instruction with a teacher or for individual keying practice, the code-practice oscillator is a necessity. In this article, I will take a look at the various forms of code-practice oscillators and suggest ways of improving them.

Perhaps the simplest code-practice oscillator is an electromechanical buzzer and a battery. Such code-practice sets have been widely used, and some high-frequency buzzers for this purpose have a remarkably "pure" note.

Vacuum-tube oscillators came into use in the 1930s, and one very common circuit for a code-practice oscillator is shown in Fig. 1.[1] In earlier designs, a type-30 tube was usually employed. Note that the key and earphones are in the B+ lead.

A simplified vacuum-tube code-practice oscillator was also possible (one that did not need an audio transformer) which utilized the inductance of the earphones themselves, in a Colpitts circuit. This is shown in Fig. 2; the earphones and key are still in the B+ lead.

Since there are many forms of vacuum-tube oscillators possible (the tickler feedback and Colpitts versions are in Figs. 1 and 2), it is possible to find considerable variation in code-practice oscillator circuitry. However, generally, the oscillators all are simple tickler feedback, Colpitts, or Hartley oscillators which are started at each application of the keyed B+.

The neon-lamp relaxation oscillator was occasionally used as a code-practice oscillator, as shown in Fig. 3.[2] This unit

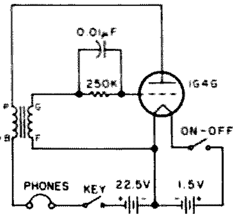

Fig. 1. Vacuum-tube code oscillator.

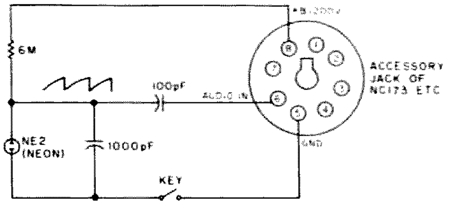

Fig. 3. Code-practice oscillator using neon-bulb relaxation oscillator.

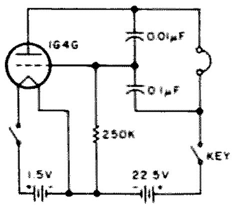

Fig. 2. Simplified vacuum-tube code oscillator.

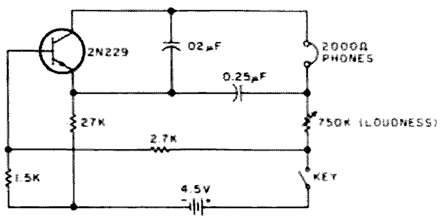

Fig. 4. Code-practice oscillator using early germanium NPN transistor.

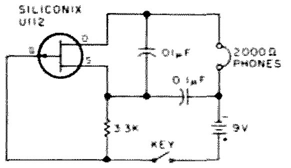

Fig. 5. Code-practice oscillator using early P-channel FET.

was designed to be plugged into the octal accessory jack of a National receiver, thereby utilizing the receiver's speaker, audio amplifiers, and power supply. The neon-lamp relaxation oscillator was the only form of tube-type RC oscillator commonly used as a code-practice oscillator. Unlike conventional oscillators (which produce a more or less sinusoidal output), the neon-bulb relaxation oscillator produces a sawtooth waveform.

When the first production (germanium) transistors became available at prices low enough to interest experimenters, they were immediately pressed into code-practice oscillator service. Fig. 4 shows a typical early transistor code oscillator using a germanium transistor.[3] Note that this is very similar to Fig. 2, except that an NPN transistor replaces the tube and a lower plate (collector) voltage is used. The convenience of only one low-voltage battery to operate such a transistor code oscillator, and that at very low current drain, was a real boon to portability. The circuit would be substantially the same using a more modern silicon NPN transistor, such as a 2N3641. If a PNP transistor is used, the same circuit as in Fig. 4 can be built, but the battery polarity would be reversed.

As FETs became available, these were also used in code oscillators. Fig. 5 shows a simple code oscillator using one of the earliest available P-channel junction FETs.[4] The N-channel circuit would be the same, except with the battery terminals reversed. The FET code-practice oscillator is generally a bit simpler than an equivalent bipolar transistor circuit.

It must be made clear that in all the oscillators in Figs. 2, 4, and 5, the circuit requires the use of magnetic phones having an impedance of 2000 Ohms or higher. If low-impedance phones or piezoelectric (crystal) phones are used, the circuits do not have the required inductance to oscillate at the correct frequency (if at all).

The circuit of Fig. 3 used a neon tube as a negative-resistance element. In order to redesign the circuit for solid state, one could simply replace the NE2 with a four-layer diode having approximately a 50-volt breakdown voltage. Such diodes are made by ITT. The circuit would then be as shown in Fig. 6. Four-layer diodes are available in lower voltages, however, than neon bulbs, so a relaxation oscillator could be built using an even lower voltage, i.e., battery operated.

The circuit of Fig. 7 shows a unijunction transistor code oscillator, with an FET audio isolation source-follower after it to drive the phones and an NPN transistor as a keying device. With this circuit, you no longer have the supply current flowing through the key, and you finally have removed that same dc current from the phones. (Dc through the phones tends to eventually demagnetize the magnets in them.) The unijunction transistor oscillator, like the four-layer diode circuit, produces sawtooth waveforms.

Fig. 8 shows a "complementary" circuit for a simple code oscillator that uses an NPN (silicon) and a PNP (germanium) transistor which has been used extensively by those hams who swear by the *ARRL Handbook*.[5] The circuit works well, driving an eight-Ohm speaker directly, but is somewhat sensitive to transistor substitutions.

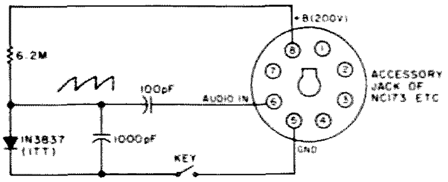

Fig. 6.

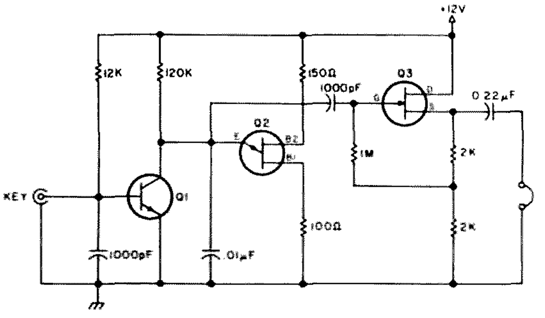

Fig. 7. Q1 = 2N3643; Q2 = 2N2646; Q3 = MPF102.

Since we've used nearly every other active device as a code-practice oscillator, I feel that for completeness I should show one using an integrated circuit. The circuit of Fig. 9 uses an inexpensive and widely-available IC. The NE555V, as first introduced by Signetics, is now second sourced by nearly all linear IC manufacturers. This IC costs about 50 cents and is keyed, in this circuit, by a transistor costing about 30 cents; so the semiconductor cost is well below a dollar. The key is not in the +Vcc line, nor are the phones; and the code oscillator operates on a 6-volt battery such as a 4F lantern battery. The waveform output is essentially a square one.

Up to this point, I have concentrated on code-practice oscillators that have as their prime goals simplicity and the use of low-priced components. This aim has apparently been in vogue because it was assumed that such oscillators are used only by beginners. However, there are many clubs with regular code classes conducted by expert CW operators, who no doubt despair at the sound of the average code-practice oscillator.

Morse code, as it comes out of the receiver, has a somewhat different quality to it than that from a code-practice oscillator. The receiver output is usually a near sine wave (providing the station being copied is "T9" and we have a good signal-to-noise ratio). The note sounds as if it simply "appears and disappears" rather than having the "crashing" quality of some

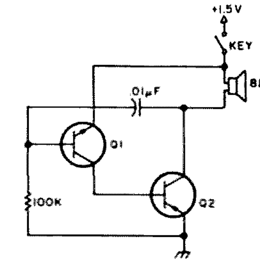

Fig. 8. Code oscillator using complementary-pair (PNP and NPN) transistors. Q1 = 2N2102; Q2 = 2N301.

code-practice oscillators.

In a search for a code-practice oscillator which has a more authentic on-the-air sound, the first requirement is having a sinusoidal waveform. There are a number of circuits for generating sinusoidal waveforms; one such circuit is the Wien Bridge, used in most laboratory audio generators. The purer the sine wave, however, the longer these oscillators take to stabilize

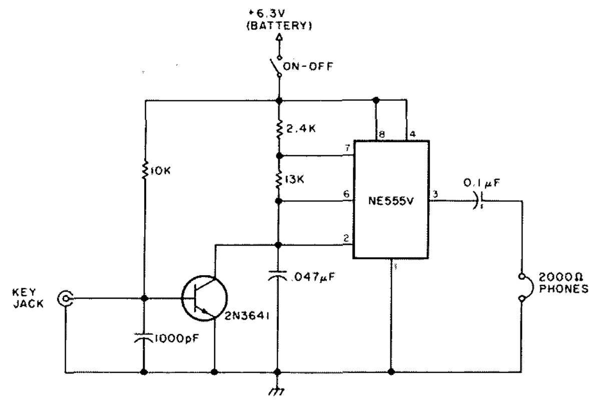

Fig. 9. Code oscillator using NE555V integrated circuit.

when B+ is applied. In short, really pure sine-wave oscillators are not suitable for being keyed on and off.

One solution to the problem would be to allow a high-purity sine-wave oscillator to run continuously and then gate its output on and off. This has one problem: The key closure and opening times do not coincide with the zero-crossing times of the (asynchronous) sine wave. Such asynchronous gating of the sine wave causes transients to be generated that are very much like the "key clicks" of an improperly operating transmitter, so far as the listener is concerned.

It is possible to build a zero-crossing gate circuit

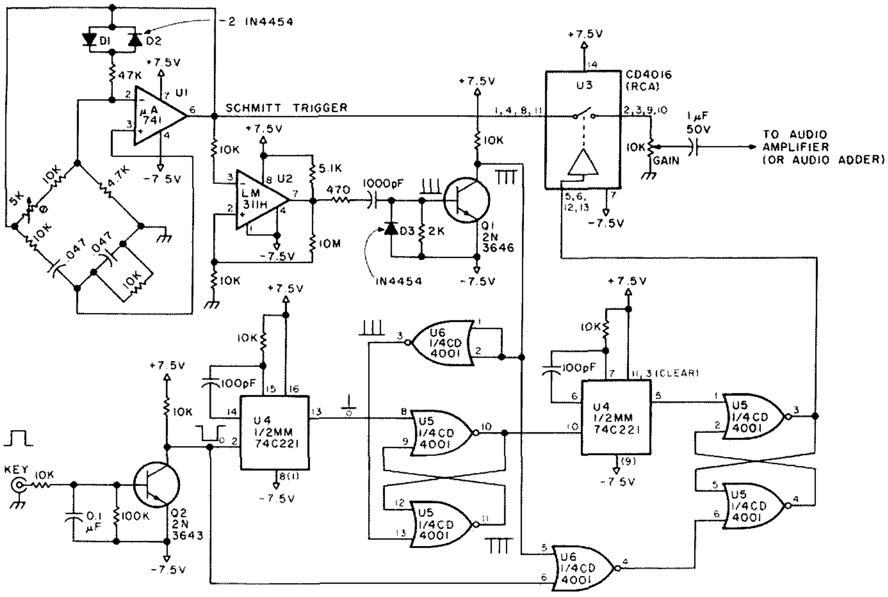

Fig. 10.

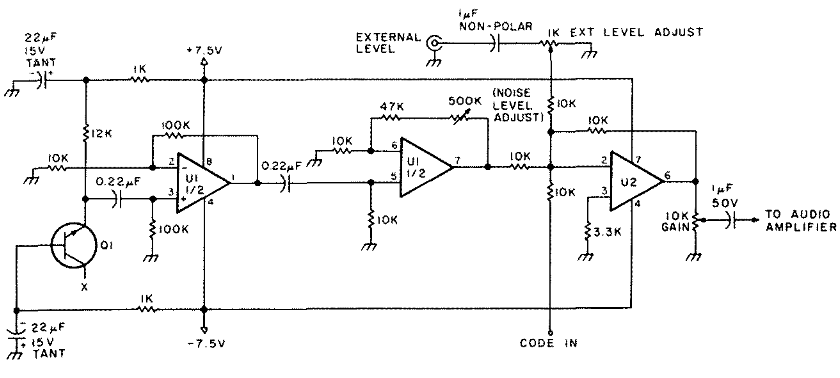

Fig. 11. U1 = LM458N; U2 = LM741CN; Q1 = 2N3641 (pick individual transistor for best noise output).

which delays turn-on and turn-off of the sine wave until that sine wave has reached a zero-crossing point. The penalty we must pay for the transient-free, pure-sine-wave gated audio pulse is delay. If the sine wave is 1000 Hz, the worst case would be slightly less than 1 ms delay at the start and 1 ms at the end of a keying pulse. Such a 1 ms delay would be almost totally undetectable to the ear.

A circuit, admittedly complex, which accomplishes the zero-crossing gating function is shown in Fig. 10. A Wien Bridge oscillator is used to generate a pure sine wave, and this is gated by a CD4016 analog gate. The CD4016 is a member of the RCA-CD4000 series of CMOS logic; it functions very well as an analog gate and is much less expensive than special ICs made for this purpose. The same sine wave is squared by a Schmitt trigger (LM311) to more sharply define the zero crossings. The output square wave of the Schmitt trigger is differentiated and the negative resultant spikes removed by a diode (D3). The positive spikes are inverted by the saturated amplifier, Q1, which makes them available at CMOS level to the logic ICs. The sequence of events in the logic is too tedious to go through here; you can go to reference 6 for details, if you're interested. The net effect is to delay the opening of gate U3, after application of a key pulse, until a negative-going zero crossing of the sine wave occurs. The gate is then held open until the key pulse ends, plus whatever time it takes until another negative-going zero crossing of the sine wave occurs. The logic uses the negative-going spikes from Q1 as information as to when the sine wave is mak-

ing a negative-going zero crossing.

If you really want to offer code practice with as close as possible to off-the-air flavor, and yet have it under the control of your code class instructor, one additional complication may be added. A white-noise generator and operational adder can combine the code signal and the noise to produce any (adjustable) signal-to-noise ratio desired. In Fig. 11 is shown such a noise generator and operational adder. A back-biased emitter-base junction of a transistor is used to generate the noise as it goes into avalanche. Two operational amplifiers amplify this weak avalanche noise by a factor of up to 500. The third op amp is the operational adder, which has three combinational inputs: noise, code, and a third extra input. This third input could be used to input background QRM from an actual HF receiver, if you really wanted realism. Note that each of the three inputs to the operational adder has its own level control, and the total combined signal level may be adjusted, also.

Fig. 12 shows a regulated power supply and audio output stage, suitable for Figs. 10 and 11. One of the older IC audio amplifiers is used because it is easier to use in the low gain mode than some newer ones, which operate only in the fixed (high) gain mode.■

References

1. Editors and Engineers, *Radio Handbook*, 7th edition, 1940, p. 15.
2. Lewis, A., "Hints and Kinks, Code Practice Oscillator," *QST*, March, 1950, p. 53.
3. Sylvania, *Performance Tested Transistor Circuits*, 1958, p. 35.
4. Flanagan, R., "Hints and Kinks, FET Code Practice Oscillator," *QST*, July, 1967, p. 49.
5. ARRL, *The Radio Amateur's Handbook*, 48th edition, 1971, p. 12.
6. Olson, H., "Tone-Burst Gate Minimizes Distortion," *Electronic Products*, March 19, 1973, p. 190.

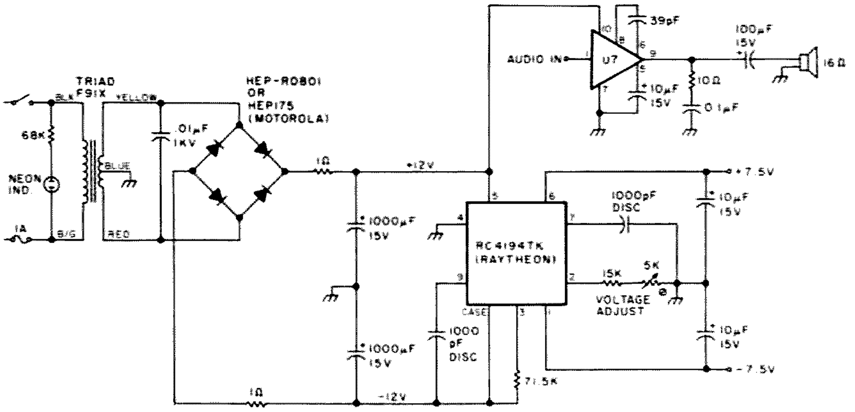

Fig. 12. Power supply and audio amp for zero-crossing code oscillator (use with Fig. 10 or 11). U7 = Motorola MC1454G, HEP593, HEPC6093G, MC1554G.

New Products

from page 253

an office conference table, perhaps the most practical and convenient of all the many items pressed into service over the years I have been an amateur. However, the conference table is now being relegated to more prosaic duty in my office-workroom. The reason for the table's retirement is my new S-F Radio Desk.

The S-F Radio Desk was clearly designed by an amateur for use by amateurs. It is a two-tiered affair with plenty of room for two HF transceivers and an amplifier, as well as my 2-meter rig, an antenna tuner, and a couple of other small accessories—without crowding or overloading. The rear of the bottom tier is angled so that equipment placed on it is tilted upward at the correct angle to provide comfortable viewing and ease of operation. Below the main desk surface is a convenient shelf for holding small accessories when not in use—logs, *Callbooks*, and all the other items that otherwise tend to clutter up the desktop.

Measuring 39 x 30 x 50 inches, the Radio Desk is available in either teak or walnut finish, or unfinished birch veneer. Assembly is required. All hardware is supplied, and clear, easy-to-follow illustrated instructions make it simple to put together. The only unsupplied item I needed was a bit of Elmer's glue. Assembly went without a hitch and was completed by the time I had finished two cups of coffee. The finished desk is a mighty attractive addition to the shack and I wouldn't hesitate putting it in the living room for everyone to see.

If you could use an operating desk that will hold your equipment, improve your operating efficiency, and, at the same time, has sufficient eye appeal to satisfy the wife and rest of the family, you ought to be considering the S-F Radio Desk. The desk is priced at $139.95 in teak or walnut finish, and $124.95 in unfinished birch. Prices include shipping by UPS. *S-F Amateur Radio Services, 4384 Keystone Avenue, Culver City CA 90230; (213)-837-4870.* Reader Service number S33.

Morgan W. Godwin W4WFL
Peterborough NH

NEW-TRONICS ENTERS 220-MHZ AMATEUR BAND WITH INTRODUCTION OF ALL-NEW 1¼-METER 7-DB-GAIN VERTICAL FIXED-STATION ANTENNA

The all-new Hustler 220-MHz vertical fixed-station amateur antenna, designated the Model G7-220, was recently introduced by New-Tronics Corporation of Brookpark, Ohio. The G7-220 marks New-Tronics' entry into the now-popular 220 MHz band and complements their existing base and mobile amateur antenna line. The superior 7-dB gain of the antenna, for both transmitting and receiving, makes it one of the most powerful omnidirectional 1¼ meter antennas available. The all-new rugged design of the Hustler G7-220 antenna keeps the signal radiation pattern at the lowest possible angle to the horizon, for maximum efficiency and longest range.

New-Tronics' new 220-MHz vertical Hustler antenna, the Model G7-220.

The Model G7-220 has an swr of 1.5:1 across its entire 5-MHz bandwidth, with swr at resonance of 1.2:1 at the antenna. The radiating elements of the Hustler G7-220 are dc-grounded for lightning protection, and the antenna has a 50-Ohm base impedance.

This new Hustler 220-MHz vertical combines the latest antenna technology and the best available corrosion-resistant materials for extra-long life. Only Hustler uses all stainless steel hardware in amateur and professional products. Each component is precisely built for quick and easy assembly.

Continued on page 272

Brian E. McArthur VE3CGE
67 Nanwood Drive
Brampton, Ontario
Canada L6W 1M1

PCs Are Easy

—step-by-step details

The vast decrease in the cost of integrated circuits over the past five years has opened a totally new frontier for the electronic experimenter. Magazines, such as this one, offer a multitude of projects designed to whet the appetite of the most reluctant builder. These articles invariably offer schematic diagrams, parts lists, suppliers, and full or half-size printed circuit board layouts. Herein lies the crunch of the printed circuit board.

The avid experimenter, through frustration, usually ends up buying a commercially-made printed circuit board at a rather high price. This will obviously yield the desired result, a good-looking finished product. There is not, however, the self-satisfaction of having done it all by one's self.

An alternate and less acceptable method is to attempt to hard wire everything on the back of a piece of vectorboard. (Vectorboard is made of a nonconductive material which has prepunched holes so that component leads may be passed through and soldered on the other side of the board.) I cannot think of any reason why the completed project should not work well, if reasonable care is taken in parts layout and soldering. Aesthetically, however, it leaves much to be desired.

Where do you go from here? There is only one obvious step, and that is to make your own.

Before I get into actual construction methods, perhaps I might discuss briefly just what is involved in making a printed circuit (PC) board.

The basic PC board is composed of a thin layer of copper coating on one or both sides of fiberglass or other nonconductive material. To obtain the desired circuit layout, it must be reproduced on the PC board using some type of "resist." (Resist is the coating which inhibits the etching process.) Once you have a perfect layout, the unwanted copper between the traces must be removed. This process is called "etching." Ferric chloride solution is most commonly used and will remove the unwanted copper in short order. All that remains then is to clean up the board, drill a few holes, and solder on the components. Sound easy? It is. Well, almost that easy! There is still one big problem: How do you get the circuit onto the board before you etch it?

There are two answers to that question. The circuit layout can either be drawn onto the board or it can be done photographically. Both of these methods will be covered later in this article.

Procedure

To begin, there are four basic steps in the manufacture of circuit boards:

Step 1: Procure the blank circuit board.
Step 2: Reproduce the circuit board layout on the board with resist.
Step 3: Etch the PC board.
Step 4: Clean and drill the board.

Now, let's deal with each step in turn and get down to the how-to-do-it stage. First, you must obtain a piece of blank circuit board of sufficient size for your project. Size is not as important as the thickness of both the copper and the insulating backing. Thin copper will etch off much faster, which is helpful, but it may not withstand as much heat during soldering. The thickness of the board must be considered when mounting heavy components such as transformers, etc. You do not want a warped board!

Having satisfied yourself as to the choice of board, the next step is to clean it before applying the resist. (I cannot emphasize enough that the board must be clean!) The surface should be scoured thoroughly using a steel wool soap pad. Absolutely all of the oxidation must be removed and the board left in a bright, shiny condition. After scouring, the board

must be rinsed thoroughly under hot tap water to remove any soap residue. Dry it with a clean, soft cloth, being careful not to touch the surface with your hands as this will leave an oily film which could affect the application of the resist.

Setting the clean board aside temporarily, you must decide which method to use in applying the resist. There are two choices available—the freehand and the photographic methods.

The freehand method requires that the connecting foils be drawn on the clean board by hand with a resist pen. Positioning your copy of the full-size layout on the blank circuit board and fastening it securely with Scotch™ tape, still being very careful not to touch the copper, take a sharp center punch or awl and gently, very gently, mark all of the holes by punching through the paper. When this has been done and the paper removed, a clear mark should be left where the components will eventually be positioned. From now on, the neatness of the board is determined by how carefully the marks are connected. The holes should not be drilled now since the etchant could undercut around them and ruin your efforts. For the very fine lines, a resist pen is recommended. This looks very much like an ordinary magic marker; however, the ink is resistant to ferric chloride solution. These pens are not really suitable for the larger areas for which resist is sold in bottles and applied with a brush. Every area of copper you wish to retain must be thoroughly coated with resist. It isn't necessary to use commercially-sold resist, since many pens of the waterproof-ink variety will work just as well, as will nail polish, for the larger areas.

At times, it gets difficult to draw fine lines and integrated circuit patterns which are very small and so often required. There are all types of decals, rubber stamps and drawing aids sold to help with this problem. For the larger and less complicated circuits, this method is best because it is quick and does not require a lot of equipment, just patience and a steady hand. The biggest drawback to this method must now be apparent.

What do you do, though, if a full-size layout is not available? A very complicated circuit can become a nightmare! Now is the time to investigate the photographic method.

Assuming that everyone at one time or another has seen a black and white negative, you should realize that it is really not black and white at all, but mostly made up of varying tones of grey. This is not good enough for these purposes. What you need is a full-size negative of only two tones, black and perfectly clear. This is accomplished by using lithographic film. Commercially, it is sold by Kodak (Kodalith) and Ilford (Ilfolith), both of which will serve your needs if the manufacturer's directions are carefully followed when using these films.

The first step in making a full-size working negative is to take a black and white picture of the circuit board in the magazine with a camera and close-up attachment. The layout must be kept perfectly flat and the camera level and parallel to it. Care in this part of the procedure will keep all of the lines in their proper perspective and to scale.

One magazine (that I know of) does not give a true black and white circuit layout. Instead, they use grey, and show the components overlaid in red ink. This does not present much of a problem. Simply by placing a deep red filter over the camera lens, presto, the components disappear and the grey lines appear black. Because you need the small negative to make the big one, your film has to be processed. The next steps require the use of an enlarger and darkroom, so now is the time to enlist the aid of the local camera club if this equipment is not readily accessible.

You now progress into the darkroom where you'll be using the special "lith" film mentioned earlier. Lithographic film requires special safelights and developer, so following the manufacturer's directions is a must. Placing the negative into the enlarger, project the image onto the easel and focus it perfectly. You must project the image the exact size of the printed circuit board you desire, or none of the components will fit. This is quite easily accomplished. Simply place the full-size magazine layout, photographed earlier, under the enlarger and adjust the projected image until both are exactly the same size. If the layout was only half scale to begin with, you will have to measure the size of some known component and adjust the image to suit. The enlarger is switched off and the magazine layout is removed from under the enlarger and replaced with a piece of lithographic film. Exposure for the film may vary, but a figure of thirty seconds is a good starting point. The exposed film is placed in the developer for about one and a half minutes, stop bath for fifteen to thirty seconds, and then fixed according to the instructions. Before turning on the lights, you must put away the rest of the lith film. The wet full-size positive must now be washed and allowed to dry.

The next part of the process is relatively easy. After the full-size has dried, you can make the full-size negative that you were after in the first place. The positive is placed on top of a sheet of lith film (again in the darkroom) and a clean sheet of glass placed on top. The glass will keep everything flat, while you make a contact negative by exposing the film to light. A 60-Watt lamp held two feet above the film for 15 seconds is approximately the right amount of time. The film is processed as before, and, while it dries, carry on with the next step, the preparation of the circuit board.

In order to transfer the image of the full-size negative to the circuit board, you must first coat it with "etchant resist sensitizer." This type of resist, available in an aerosol spray can, when deposited on the circuit board, makes it sensitive to light much like a photographic paper, except in this case it is most sensitive to ultraviolet light. The spraying of the circuit board must be done in the darkroom under a safelight with adequate ventilation. Starting from the bottom, spray the board evenly, holding the can about 5 to 8 inches away. The resist looks like a thin lacquer with a purplish tint to it. The excess is allowed to run off by holding the circuit board vertically by the edges. Now put it away to dry overnight, somewhere where it will not be exposed to light.

The time has now arrived to expose the circuit board to ultraviolet (UV) light. Carefully, the full-size negative is placed over the treated circuit board in the darkroom and covered with the sheet of glass to hold it flat. In order to expose it to ultraviolet light, the board should be placed outside in the sun

about one and a half minutes or under a sun lamp. (I use a sun lamp about 18 inches above the board and expose for 1 minute.)

The PC board is brought back into the darkroom and developed in "photo-etching developer." This chemical dissolves the resist which was not exposed to UV light. After careful washing, the board is allowed to dry. (For safety's sake, read and follow all instructions on both the resist and developer containers because they are both highly toxic and volatile chemicals requiring a lot of ventilation.)

After taking one last look and possibly touching up an area or two with the resist pen, you now are ready to actually etch the circuit board using ferric chloride solution. (Take my word for it, ferric chloride solution is a highly corrosive substance which will eat its way through the copper, the concrete floor, or, as I found out, the outside of my wife's washing machine. Wear gloves and eye protection, and follow the instructions to the letter!)

Having chosen a glass tray, not metal, of appropriate size, pour in the ferric chloride solution to a depth of about three quarters of an inch. The solution is used at room temperature and, again, inhalation of the fumes should be carefully avoided. The PC board is placed into the ferric chloride solution face up and agitated gently by raising and lowering the tray about one inch. The etching process will take about one half hour, so patience is the key word here.

When sufficient time has elapsed, the PC board is removed from the solution and the etchant gently washed off under running water. By holding the board up to the light, you can see if all the unwanted copper has been removed. If not, replace the PC board in the etchant and continue agitation. The completely-etched board will have to be scoured with the soap pad again to remove all the resist. There are chemical removers, but this is the easiest way and makes the board easy to solder, too.

Steps 1, 2, and 3 were the hardest, and drilling the board is child's play in comparison. The only trick here is to use the correct size of drill bit (see the drill guide in Table 1) to fit the electronic components. A drill press is an asset, although not a necessity; a little care will go a long way.

All of the items used in this article are available in most areas from the local electronics supplier. The resist, developer, and etchant will run about $15.00, but that will do many, many PC boards. The lithographic film costs about $30.00 for fifty 8" x 10" sheets. It is definitely more expensive to make the PC boards photographically, but the results certainly justify the expense if more than one board is going to be made.

Thus, with a little time and effort, home manufacture of printed circuit boards can be both relatively easy and definitely self-satisfying. ■

Number 65 drill	#20 AWG wire; Molex pin; ¼-Watt resistor
Number 60 drill	½-Watt resistor
Number 56 drill	1- or 2-Watt resistors; IC sockets

Table 1. Drill guide.

New Products

from page 262

The 122"-long vertical element and four 14¾"-long radials of the G7-220 are made from high-strength heat-treated aluminum. Each radial has a 3/16" o.d. The G7-220's N-type connector, used on all new Hustler amateur verticals, provides a tight all-weather seal and virtually perfect rf characteristics under all conditions.

The G7-220 weighs only 7 pounds, and is easily mounted on any capable vertical support of up to 1¾" o.d. The wind loading of the antenna is only 26 pounds at 100 mph velocities.

For further information on this or other Hustler products, write: *Sales Department, New-Tronics Corporation, 15800 Commerce Park Drive, Brookpark OH 44142.* Reader Service number N2.

BELDEN INTRODUCES TWO NEW LOW-NOISE COAXIAL CABLES

For high-impedance applications, including test leads and instrumentation, Belden Corporation's Electronic Division has introduced two low-noise coaxial cables.

The two are a 174/U-type with 26-gauge stranded conductor (no. 9239), and a 59/U-type with a 22-gauge solid conductor (no. 9224). Construction details include bare copper-covered steel conductors, polyethylene insulation, and a conductive layer. Shielding for the 9224 is an 88%-coverage tinned copper braid; for the 9239, it's a bare copper braid with 93% coverage. Both utilize a black vinyl jacket with overall diameters of .101 inch (9239) and .242 inch (9224).

Electrical specifications: nominal capacitance—no. 9239, 39.3 pF/ft.; no. 9224, 21 pF/ft.

Both low-noise coaxial cables are available in 100-, 500-, and 1,000-ft. putups; no. 9224 also is available in Unreel®-packed 500- and 1,000-ft. lengths.

For additional information, write: *Manager, Marketing Communications, Belden Corp., 2000 S. Batavia Ave., Geneva IL 60134.* Reader Service number B41.

NEW DUAL OPERATIONAL AMPLIFIER FROM SIGNETICS OFFERS LOW NOISE AND WIDE BANDWIDTH

A dual low-noise general-purpose operational amplifier offering a wider bandwidth and improved output drive capability compared to standard op amps is now available from Signetics.

Designated the NE5533, the device is capable of driving 10 V (rms) into 600 Ohms directly and features a small-signal bandwidth of 10 MHz and power bandwidth of 200 kHz.

The 5533 is internally compensated for gain equal to or higher than +3. Frequency response can be optimized with an external compensation capacitor for applications requiring it.

Other specifications of the 5533 include: dc voltage gain, 100,000; ac voltage gain, 6,000 at 10 kHz; and supply voltage range, ±3 to ±20 V. The 5533 comes in a standard 14-pin dual-in-line package.

For further information, contact: *Guy Caputo, Industrial Marketing Manager, Signetics, 811 East Arques Avenue, PO Box 9052, Sunnyvale CA 94086; (408)-739-7700.* Reader Service number S70.

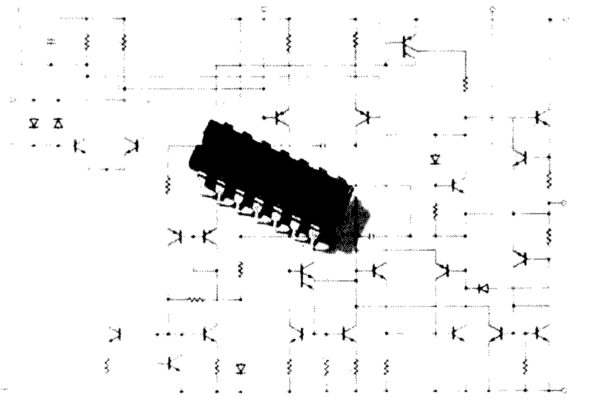

Signetics' new NE5533 dual op amp.

Merwin Updyke WB3EUG
609 Bell Avenue
Altoona PA 16602

The Games People Play

—why not hams?

Playing games on ham radio is nothing new. There is almost always someone on the air who will play, and the element of radio communication adds a new twist to any game. A good ham game could liven up dead bands, fill those extra hours, provide excellent opportunities for those who are not particularly given to rag chewing or new "mike shy" hams, give use to little-used 2 meter simplex channels, and possibly even make some new "wallpaper" available for award-conscious operators.

But good ham games have been few and far between. To be well used on the air, a game should fulfill all or most of the following requirements: The ideal ham game must 1) be easily played by two people, 2) be able to be played with only a paper and pencil as well as on commercial game boards, 3) have rules that are simple and can be easily given over the air to someone not at all familiar with the game, 4) be able to be played in a relatively short time, 5) have individual moves or plays that can be executed in a short time, and 6) be challenging and contain logically varying degrees of difficulty to ensure continued interest and allow advancement in playing skill.

After I found two games that met these requirements, a topical CQ of "CQ game, CQ for a game" brought hours of challenge and enjoyment. Why not give them a try yourself?

Game #1

This one is my favorite and, of the two, holds the most promise for a game that will be played on the air for years. Master Mind® by Invicta Blastics, Ltd., is a new game that has won tremendous popularity throughout the world. There are even British National Master Mind Championships held yearly. It is said to be 80% logic and only 20% luck, is inexpensive to buy in its attractive game board form, can be played almost anywhere (even comes in a pocket-size board good for field days, etc.), and comes with instructions in ten languages.

Rather than give more details of the game, the following is offered as an explanation suitable for use on the air with a person who has no knowledge of the game. You may want to make a few changes, but I found this order to work well. These rules are designed for convenient use of the board by Invicta.

After calling "CQ game" and having secured a promise to at least give it a try, give the following instructions:

1. Secure a piece of lined paper and a pencil or pen.
2. There are 6 colors. Write down "R" for red, "W" for white, "Bu" for blue, "G" for green, "Y" for yellow, and "Bk" for black.
3. Number down 10 lines, starting with 10 and ending with one.
4. Above these 10 lines, write a 4-color code of any combination of the 6 colors. For this first game, do not repeat a color; use four different colors.
5. Starting with line one, I will try to break the code. I will give you a 4-color code. Write it down. Then give me a rating of "Xs" and "Os." Write on your paper "X" = right color and right place; "O" = right color but wrong place.

If I have two reds, for example, but your code has one red, I get only one "X" or "O", depending on position. The order you give me the "Xs" or "Os" is not to show anything about the

order of the ones I have right.

6. I have up to ten tries to match your code. The winner is the one who breaks the code in the least amount of trys. Any questions? My try for line one is __ __ __ __. What is my rating?

7. When he gives a rating, say "That means . . ." and explain the rating to be sure he understands.

A condensed form of these rules for quick reference is found in Table 2. Both players should be keeping track of the entire game on a board or paper (the board is generally easier). After you break his code, make one for him, and the play goes on. You will find that it helps to "think out loud" over the air.

The sample game in Table 1 should help you to better understand the above instructions. Try to break the code on the next try. The answer is at the end of this article.

If your experience runs like mine, you'll find your opponent saying, "Once is not enough!", and the minutes will quickly and enjoyably pass by. Hopefully there will soon be many on the air who have played a few times. That's when the many variations keep the game going strong. First remove the restriction that all the colors must be different. You can make the code all one color if you want. Next you might want to change the number of possible combinations. For young children, you may want to make it three positions and only four colors. But you will most likely want to increase the number of possible combinations. The regular Master Mind game (the one just explained) has 1296 permutations, but, by allowing an empty space to be played as a color (designated with an "S" on the air), it increases the permutations to 2401. Those who expect to enjoy this game and want to further develop their skills may want to purchase the Super Master Mind version of the original (also by Invicta Blastics, Ltd.). It can be played as the version explained above, but allows for a game with 5 positions and eight colors (orange, "O", and brown, "Br", are added), allowing 12 tries to find the one of 32,768 (or if space is used, then one of 59,049) permutations in the code. (Note: The formula is: no. of permutations = C^P, where C = no. of colors and P = no. of positions.) Other interesting variations, such as allowing the codemaker to make one incorrect rating during the game are offered in *Modern Board Games*, edited by David Pritchard and published by William Luscombe Publisher, Ltd., which should be available at your local library.

Developing strategies is an important part of the game and is necessary for the more advanced games. Also, the codemaker can learn to play more of an active role as he analyzes his opponent and tries to psyche him out with little "extra comments." The history of the game and its tremendous popularity make interesting rag chewing. All this, plus discussion of tournaments and many more topics (with even a short chapter on computers that play Master Mind), can be found in *The Official Master Mind Handbook* by Leslie H. Ault, published by Signet. It's a must for the serious Master Mind.

For those who desire more practice, a computer pocket calculator-type game that will play against you is offered by Milton Bradley Co. under the name Comp IV™. You can play this with up to 5 positions and 10 choices. Cost is around $25.00.

This game presents a golden opportunity. Why not have some awards for the Master Mind ham? How about WM-20—won Master Mind in 20 states—or, for real operators, WMAS—won Master Mind in all states? Perhaps a grueling challenge would be MDX-15—Master Mind played DX in 15 countries—or the ultimate: MDXCC! Well, anyway, it would be great to see some enterprising ham advertising saying "Send $1.50 with a log to . . ." for some sort of Master Mind or game award. Perhaps a common frequency could be chosen.

Who knows, maybe there will even be some "Mind nets" and "tournaments in the air" and . . . better get on to the next game.

Game #2

Here is another game that meets most or all of the requirements previously stated. Those who tire of Master Mind (devotees say that this is impossible) may find that this game offers the variety needed to spruce up their ham game venture. This game, which is also offered in plastic under various names (Tri-Tac-Toe at JC Penney for $6.95), is a complex variation of tic-tac-toe I call Tri-Tac (for three-dimensional tic-tac-toe).

Following are two variations of the game, the second being the more difficult. The first game requires 3 in a row, the second requires 4 in a row. The rules are the same as in regular tic-tac-toe, except that those in a row can be on different levels. Letters and numbers provide easy coordinates for positioning "Xs" and "Os" over the air. In the examples given in Fig. 1, I use the letters a, b, c, and d to show winning combinations. Study them and try to imagine them stacked up in layers to form a cube.

For the first game, the person challenged goes first; thereafter, the winner goes first. The challenged calls coordinates to place

10
9
8
7
6
5
4 W R Bu G OO
3 R Bk G Bu OXX
2 Bu G Bk Y OOO
1 G W Y R OOX

Table 1. Sample Master Mind game.

1. Secure paper and pencil.
2. Colors = R, W, Bu, G, Y, Bk.
3. Number 10 lines.
4. Write down code.
5. Rate each try "X" or "O".
6. Review rating given.

Table 2. Master Mind instructions.

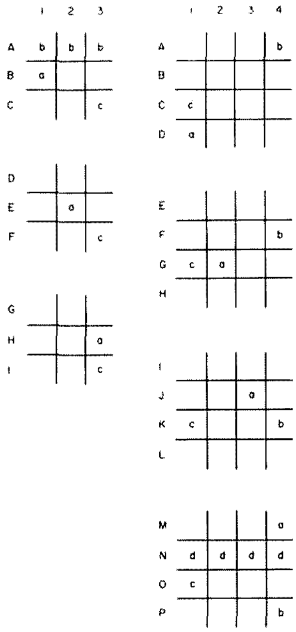

Fig. 1. Tri-Tac.

his "O", the challenger calls coordinates to place his "X", and so on, until one person gets his required number in a row and is thus the winner.

You may want to write down a list of instructions to be given over the air for Tri-Tac, as was done for Master Mind.

Yet another variation that can be played on the four-grid version would be to give each player two markers—to one, "W" and "X", to the other, "Y" and "Z"—allowing for either to be played at any time. The first to get four of one of them in a row wins. Or try it as the first to get both of his markers four in row is the winner.

Again, some Tri-Tac enthusiast should offer a few awards as for Master Mind. Will you accept this challenge?

I hope you enjoy these ham games as much as I have. When playing, keep the individual plays short, repeat plays and instructions often, think out loud so as to occupy the frequency, and watch that 10-minute timer for ID. Even if no one offers awards, you may want to keep a notebook of all your games, times, etc., for review and strategy development.

"Okay, my first try is W, Bu, Y, R. What's my rating?"

(By the way, the answer for the sample Master Mind is Y, Bk, G, R. It is not one of the most simple you will run into.)■

Editor's note:

I enjoy Master Mind enough so that Sherry and I take one along on trips and use it during plane rides to while away the time. Super Master Mind has eight colors of pegs and five holes, making it even more demanding than run-of-the-mill Master Mind.

Then you can play the same game with words. Think up a real stinky four-letter word and use the same system for playing. This takes no equipment at all other than a pencil and pad. Sherry and I have played this while driving.

Card games have been difficult to play over the air . . . obviously. But, with the advent of microcomputers which can shuffle and deal cards for us, perhaps the day of the over-the-air gin rummy game is not that far off. If any group gets going with this and gets porky about their prowess at cribbage, I'll be on frequency to challenge.

Computers can throw dice for us, too, making backgammon possible. Please be sure to let 73 know if you get involved with this sort of mischief.

Oh, if you would like some rotten words for Word Master Mind, you might try: BUNK, PUMP, LULL, XRAY, JAZZ, FIZZ, FLOX, etc.—Wayne.

W2NSD/1
NEVER SAY DIE
editorial by Wayne Green

from page 255

able to take a simple business trip and, for less than the regular fare, fly anywhere in the Eastern system . . . and this includes such interesting DX hot spots as Saint Martin (which is two countries!), Martinique, Trinidad, and a lot of other great Caribbean islands.

Write ahead and get your license from the Department of Telecommunications. If you wait until you get there, you may find yourself up against several days of red tape, and be back home before the ticket comes through.

Here's the only border between the French side of Saint Martin and the Dutch side, Saint Maartens. It's just a marker alongside the road, and you have to keep your eyes open to see it.

You'll find that there are other demarcations between the two countries when you try to make a phone call from the Dutch side to the French. Good luck in dealing with the French operators . . . if they get off lunch break.

We could use a lot more activity in the islands, so check into the Eastern fares and see if you can't activate an island for a few days and find out why some hams get so addicted to DXpeditioning. With the current line of tiny rigs, you can carry one along, complete with antenna, right under the plane seat.

The Eastern fares have substantially changed the economies of the islands, so you'll want to be sure to reserve your seat well ahead of time and make sure that you have a

hotel reservation, complete with permission to use your ham rig and antenna. You'll want to save up some money, too, for the boom in Caribbean travel which has resulted from the Eastern fares has also jacked up the costs of hotels, food, etc.

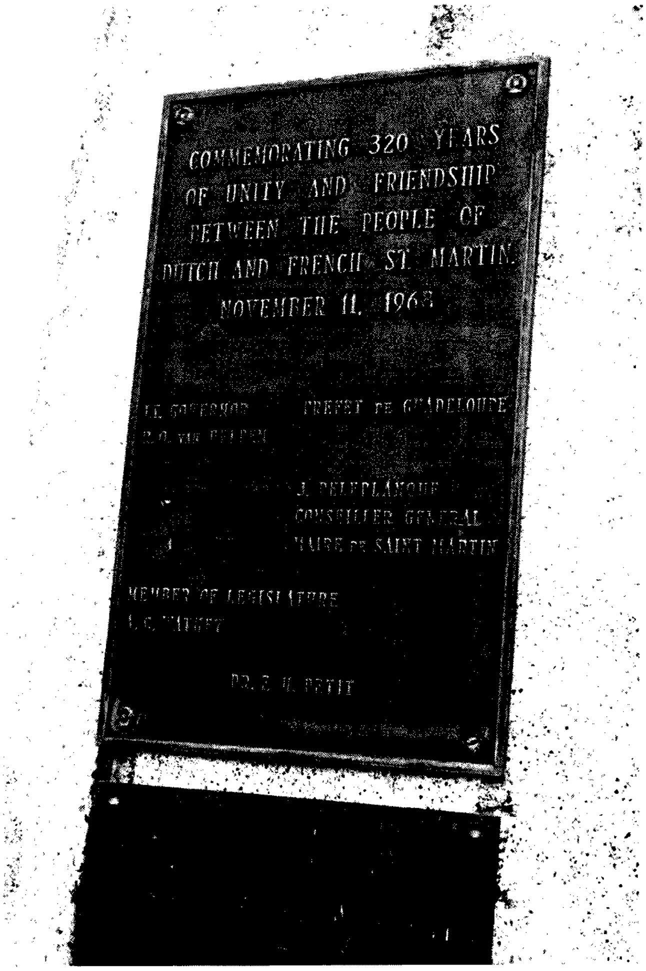

AUGUST WINNER

"Ham Radio Is NOT A Rich Man's Hobby"? Rick Ferranti WA6NCX/1, author of August's most popular article, will find himself in a slightly higher income bracket this year, thanks to the $100 prize our readers voted him with their Reader Service card ballots. Rick, we suggest you drop the hobby or stop writing crackerjack articles for *73*—or it *will* be a rich man's hobby for you.

Ham Help

I am a public school teacher at the Pine Point Experimental School on the White Earth Indian Reservation in Minnesota. The school is the main focus of the Pine Point community, and is involved with preschoolers through adults.

There is much interest on the part of the students and community in general in communications, and many students are excited about studying for their amateur radio licenses and starting a ham club. Interest was spurred by the CB club we started last spring, but the sunspot cycle put the lid on legal 11 meter communications during the school day. The motivation and built-in incentives in ham radio would serve an important function here, especially during the long and frigid winter.

In addition, the Tribal Council has been talking of a future Chippewa radio station to cover the reservation, and ham radio would be the seed from which engineers and technicians could grow.

If any individual, organization, or company could provide the school with working station or test equipment, learning aids, etc., new or used, donated or at low cost, please contact me at the school.

Walter Kimmel KB0CB
Pine Point Experimental School
Ponsford MN 56575

I need a diagram or information on a 2 meter 1 W-in/10 W-out amplifier. The circuit board has #85-1661-091974-080674 printed on one side and the other side has #85-1661-1 plus 2 other numbers. A thick aluminum panel has #203-1466 stamped on it. It uses one 2N5589 and one 2N5590. It has a 4PDT, 12-volt relay built-in on the board. I am also missing coils L304 and L305. Can anyone help? I will pay you for whatever is needed to copy the info.

Jung Y. Lem KB6BO
5222 Coringa Dr.
Los Angeles CA 90042

I need a manual or schematic for a Swan 117B (117 V ac) power supply. Thanks.

B. Mongeau
2215 Marie Victorin
Sillery, Quebec
Canada G1T 1J6

I am in need of a schematic diagram for a Royal Canadian Navy transmitter-receiver, type FR-12-PH 05161-PH. The rating is 12 V dc 6 A cont., 11 A int., spec. is 122904, and it was manufactured in 1944 by the Canadian Marconi Company. Also, I would like the address of the Canadian Marconi Company in Canada, if at all possible.

Emil Schuchardt, Jr.
21 East Clark St.
Springfield OH 45506

OSCAR Orbits

Oscar 7 Orbital Information

Orbit	Date (Dec)	Time (GMT)	Longitude of Eq. Crossing °W
18495 Bbn	1	0009:15	62.7
18508 Abn	2	0103:32	76.3
18520 Bbn	3	0002:53	61.2
18533 Bbn	4	0057:10	74.8
18546 Abn	5	0151:27	88.3
18558 Bbn	6	0050:48	73.2
18571 Bbn	7	0145:05	86.8
18583 Abn	8	0044:26	71.6
18596 Bbn	9	0138:43	85.2
18608 Bbn	10	0038:04	70.1
18621 Abn	11	0132:21	83.7
18633 Bbn	12	0031:42	68.5
18646 Bbn	13	0125:59	82.1
18658 Abn	14	0025:20	67.0
18671 Bbn	15	0119:37	80.5
18683 Bbn	16	0018:57	65.4
18696 Abn	17	0113:15	79.0
18708 Bbn	18	0012:35	63.8
18721 Bbn	19	0106:53	77.4
18733 Abn	20	0006:13	62.3
18746 Bbn	21	0100:31	75.9
18759 Bbn	22	0154:48	89.5
18771 Abn	23	0054:08	74.3
18784 Bbn	24	0148:26	87.9
18796 Bbn	25	0047:46	72.8
18809 Abn	26	0142:04	86.3
18821 Bbn	27	0041:24	71.2
18834 Bbn	28	0135:41	84.8
18846 Abn	29	0035:02	69.6
18859 Bbn	30	0129:19	83.2
18871 Bbn	31	0028:40	68.1

Oscar 8 Orbital Information

Orbit	Date (Dec)	Time (GMT)	Longitude of Eq. Crossing °W
3771 Abn	1	0111:17	59.6
3785 Jbn	2	0116:28	60.9
3799 Jbn	3	0121:39	62.2
3813 Abn	4	0126:50	63.5
3827 Abn	5	0132:01	64.8
3841 X	6	0137:12	66.1
3855 Abn	7	0142:24	67.4
3868 Abn	8	0004:21	42.9
3882 Jbn	9	0009:32	44.2
3896 Jbn	10	0014:43	45.5
3910 Abn	11	0019:54	46.8
3924 Abn	12	0025:05	48.2
3938 X	13	0030:16	49.5
3952 Abn	14	0035:27	50.8
3966 Abn	15	0040:38	52.1
3980 Jbn	16	0045:49	53.4
3994 Jbn	17	0051:00	54.7
4008 Abn	18	0056:11	56.0
4022 Abn	19	0101:22	57.3
4036 X	20	0106:33	58.6
4050 Abn	21	0111:44	59.9
4064 Abn	22	0116:54	61.2
4078 Jbn	23	0122:05	62.6
4092 Jbn	24	0127:16	63.9
4106 Abn	25	0132:27	65.2
4120 Abn	26	0137:38	66.5
4134 X	27	0142:49	67.8
4147 Abn	28	0004:46	43.3
4161 Abn	29	0009:57	44.6
4175 Jbn	30	0015:07	45.9
4189 Jbn	31	0020:18	47.2

The listed data tells you the time and place that OSCAR 7 and OSCAR 8 cross the equator in an ascending orbit for the first time each day. To calculate successive OSCAR 7 orbits, make a list of the first orbit number and the next twelve orbits for that day. List the time of the first orbit. Each successive orbit is 115 minutes later (two hours less five minutes). The chart gives the longitude of the day's first ascending (northbound) equatorial crossing. Add 29° for each succeeding orbit. When OSCAR is ascending on the other side of the world from you, it will descend over you. To find the equatorial descending longitude, subtract 166° from the ascending longitude. To find the time OSCAR 7 passes the North Pole, add 29 minutes to the time it passes the equator. You should be able to hear OSCAR 7 when it is within 45 degrees of you. The easiest way to determine if OSCAR is above the horizon (and thus within range) at your location is to take a globe and draw a circle with a radius of 2450 miles (4000 kilometers) from your QTH. If OSCAR passes above that circle, you should be able to hear it. If it passes right overhead, you should hear it for about 24 minutes total. OSCAR 7 will pass an imaginary line drawn from San Francisco to Norfolk about 12 minutes after passing the equator. Add about a minute for each 200 miles that you live north of this line. If OSCAR passes 15° east or west of you, add another minute; at 30°, three minutes; at 45°, ten minutes. Mode A: 145.85-.95 MHz uplink, 29.4-29.5 MHz downlink, beacon at 29.502 MHz. Mode B: 432.125-.175 MHz uplink, 145.975-.925 MHz downlink, beacon at 145.972 MHz.

OSCAR 8 calculations are similar to those for OSCAR 7, with some important exceptions. Instead of making 13 orbits each day, OSCAR 8 makes 14 orbits during each 24-hour period. The orbital period of OSCAR 8 is therefore somewhat shorter: 103 minutes.

To calculate successive OSCAR 8 orbits, make a list of the first orbit number (from the OSCAR 8 chart) and the next thirteen orbits for that day. List the time of the first orbit. Each successive orbit is then 103 minutes later. Due to incorrect tracking information obtained during the early days of OSCAR 8, the equator crossing times contained in most published charts are in error. To correct this error, multiply the orbit number by 0.00205 minutes and add the result to the equator crossing time as printed in the chart. For example, the published time for orbit number 3352, the first equatorial crossing on November 1, 1978, is 0018:50 UTC. Thus, for orbit number 3352, the corrected equatorial crossing time would be:

$$\text{Corrected time} = 0018{:}50 + (3352 \times 0.00205 \text{ minutes})$$
$$= 0018{:}50 + (6.8716 \text{ minutes})$$
$$= 0025{:}42.3$$

The longitude figures contained in the OSCAR 8 chart are virtually unaffected by this tracking error. The chart gives the longitude of the day's first ascending equatorial crossing. Add 26° for each succeeding orbit. To find the time OSCAR 8 passes the North Pole, add 26 minutes to the time it crosses the equator. OSCAR 8 will cross the imaginary San Francisco-to-Norfolk line about 11 minutes after crossing the equator. Mode A: 145.85-.95 MHz uplink, 29.4-29.50 MHz downlink, beacon at 29.40 MHz. Mode J: 145.90-146.00 MHz uplink, 435.20-435.10 MHz downlink, beacon at 435.090 MHz.

CARF

Canadian Amateur Radio Federation, Inc.

DOC PUBLISHES DETAILS OF NEW "NO-CODE" "DIGITAL" CERTIFICATE

Changes to the Radio Regulations, featuring the long-awaited details of the new "no-code" certificate known up to now as the "experimenter's" certificate and "packet radio," were made public on September 14, 1978. These changes came into effect September 30, 1978. Holders of the new ticket, now called the "Amateur Digital Radio Operator's Certificate," will be permitted operation on two meters and above using various modes of operation, including pulse modes. They may obtain an Advanced certificate after a year's operation and passing a 15-wpm code test. Advanced amateurs may use pulse modes after passing the relevant portion of the new exam. The new exams for all three classes of certificates will start November 15 of this year.

Packet radio will be permitted to all three classes in certain parts of the 220-MHz band. Along with other modes, it may be used from 220.1 to 220.5 MHz. An exclusive two megahertz slot for packet radio, only, is allowed from 221.0 to 223.0 MHz. There are no other changes in the 220 band which affect Amateur and Advanced Class operators. Another exclusive packet radio slot is from 433.0 to 434.0 MHz. Packet will also be permitted on 24.0 to 24.01 gigahertz. For identification purposes, packet headers will carry an ASCII mapping of the callsign. Secret codes and ciphers are not permitted. Modulation techniques and emissions for packet radio will be determined by experiments undertaken by amateurs themselves.

Pulse modes P0 and P1 are permitted on two meters between 145.5 MHz and 145.8 MHz, and P0, P1, P2, and P3 are allowed from 434.0 to 434.5 MHz, with P4, P5, and P9 being added in the 1215.0- to 1300-MHz slot and in bands from 2300 MHz on up.

Further changes to the Regulations note that for all classes of certificates, exams will be held four times annually, normally in October, January, April, and July. Separate credits for code exams are good for one year. Multiple-choice questions will remain for the Regulations portion, with narrative-type questions for the theory.

Details of the new regulations and the examination requirements for all three classes of certificates are contained in the *new* DOC bulletins, TRC 24, effective October 1, 1978, and TRC 25, effective September 30, 1978. These may be obtained from the Department of Communications Regional offices in Vancouver, Winnipeg, Toronto, Montreal, or Moncton, or from the Telecommunication Regulatory Service at DOC HQ, 300 Slater Street, Ottawa, Ontario K1A OC8.

Corrections

Please pass this information on to the good people who were kind enough to read my article "Sleight of Hand" in the August, 1978, issue of *73*.

The circuit shown in Fig. 5 on page 77 should not be used. This is due to the fact that as a greater load is placed upon the output, the impedances of the primary transformer windings begin to change every half-cycle. The impedance of one primary increases, while the other transformer primary impedance decreases. This gives rise to a sharp drop in output voltage as the load resistance decreases.

My apologies to anyone who has tried to make this circuit work.

Bob May K4SE
Jonesboro TN

We have just received a belated correction to "The Beeper," (January, 1977) which should allow the unit to function as intended. It appears that a lone decimal point misplacement transformed C5 to 0.001 uF when it should have been 0.01 uF.

Gene Smarte WB6TOV
News Editor

1978 Index

MOBILE/PORTABLE

OPERATING

POWER SUPPLIES

RECEIVERS

RTTY

SATELLITE—OTHER THAN OSCAR

SSTV

SURPLUS

TEST GEAR

An Improved HV Tube Socket

—easy modification

Harry J. Miller
991 42nd St.
Sarasota FL 33580

Vertical sweep amplifiers may have a high pulse voltage on the plate pin of the socket. This may cause an arc to the adjacent cathode or filament pin.

Socket replacement, while proper, may take considerable time.

I suggest that a slot be cut with a keyhole saw between the pins which are defective. This air gap between the defective pins now provides better insulation than the original socket. ■

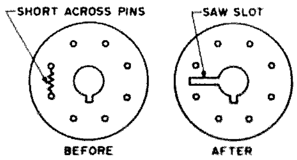

Fig. 1.

propagation

by
J. H. Nelson

EASTERN UNITED STATES TO:

GMT:	00	02	04	06	08	10	12	14	16	18	20	22
ALASKA	14	7A	7	7	7	7	7	7	14	14A	21A	21
ARGENTINA	14	7A	7	7	7	7	14	21	21A	21A	21A	21
AUSTRALIA	21	14	7B	7B	7	7	7B	14	14A	21	21	21A
CANAL ZONE	14	7A	7	7	7	7	14	21	21A	21A	21A	21
ENGLAND	7	7	7	7	7	7B	14	21A	21A	14	7B	7
HAWAII	21	14	7B	7	7	7	7	7B	14	21	21A	21A
INOIA	7	7	7B	7B	7B	7B	14	14A	14	7B	7B	7
JAPAN	14A	14	7B	7B	7	7	7	7	7B	7B	7B	14
MEXICO	14	7A	7	7	7	7	7	14	21	21A	21A	21
PHILIPPINES	14	14B	7B	7B	7B	7B	7	7	7B	7B	7B	14
PUERTO RICO	14	7	7	7	7	7	14	21	21A	21A	21	14
SOUTH AFRICA	14B	7B	7	7	7B	14	21	21A	21A	21A	21	14
U. S. S. R.	7	7	7	7	7	7B	14	21	14	7B	7B	7
WEST COAST	21	14	7	7	7	7	7	14	21	21A	21A	21

CENTRAL UNITED STATES TO:

GMT:	00	02	04	06	08	10	12	14	16	18	20	22
ALASKA	21	14	7	7	7	7	7	7	14	14A	21	21A
ARGENTINA	14A	14	7	7	7	7	14	21	21	21A	21A	21A
AUSTRALIA	21A	14	7B	7B	7	7	7B	7B	14A	21	21	21
CANAL ZONE	21	14	7	7	7	7	14	21	21A	21A	21A	21A
ENGLAND	7	7	7	7	7	7	7B	14A	21A	14	7B	7B
HAWAII	21	14	7B	7	7	7	7	7	14	21	21A	21A
INDIA	7	7	7B	7B	7B	7B	7B	14	14	7B	7B	7B
JAPAN	21	14	7B	7B	7	7	7	7	7	7B	7B	14
MEXICO	14	7A	7	7	7	7	7	14	21	21	21	21
PHILIPPINES	21	14	7B	7B	7B	7B	7	7	7	7B	7B	14
PUERTO RICO	14	7A	7	7	7	7	14	21	21A	21A	21A	21
SOUTH AFRICA	14	7B	7	7	7B	7B	14	21	21A	21A	21	21
U. S. S. R.	7	7	7	7	7	7B	7B	14A	14	7B	7B	7B

WESTERN UNITED STATES TO:

GMT:	00	02	04	06	08	10	12	14	16	18	20	22
ALASKA	21	14	7	3A	3A	7	7	3A	7	14	21	21A
ARGENTINA	21	14	14	7	7	7	7B	14	21	21	21A	21A
AUSTRALIA	21A	21	14	7B	7	7	7B	7B	14	21	21	21A
CANAL ZONE	21	14	7	7	7	7	7	14	21A	21A	21A	21A
ENGLAND	7B	7	7	7	7	7	7B	14	21	14	7B	7B
HAWAII	21A	21	14	7	7	7	7	7	14	21	21A	21A
INDIA	14	14	7B	7B	7B	7B	7B	7	7	7B	7B	7B
JAPAN	21A	14	7B	7B	7	7	7	7	7	7B	14	14A
MEXICO	21	14	7	7	7	7	7	14	21	21A	21A	21
PHILIPPINES	21A	21	14B	7B	7B	7B	7B	7	7	7	7B	14A
PUERTO RICO	21	14	7	7	7	7	7	14	21A	21A	21A	21
SOUTH AFRICA	14	14B	7	7	7B	7B	7B	14	21	21A	21A	21
U. S. S. R.	7B	7	7	7	7	7B	7B	7B	14	14B	7B	7B
EAST COAST	21	14	7	7	7	7	7	14	21	21A	21A	21

A = Next higher frequency may also be useful
B = Difficult circuit this period
F = Fair
G = Good
P = Poor
SF = Chance of solar flares

december

sun	mon	tue	wed	thu	fri	sat
					1 G	2 G
3 G	4 G	5 F	6 F	7 G	8 G	9 P/SF
10 P/SF	11 F	12 G	13 G	14 G/SF	15 G/SF	16 P/SF
17 P	18 G	19 G	20 G	21 G	22 G	23 G
24/31 G/G	25 G	26 F	27 G	28 G	29 G	30 F